Downloaded from http://www.everyspec.com

SS500-B1-MMO-010

0910-LP-101-1820

TECHNICAL MANUAL

STANDARD NAVY DOUBLE-LOCK RECOMPRESSION CHAMBER SYSTEM

DESCRIPTION, OPERATION, MAINTENANCE,
AND ILLUSTRATED PARTS BREAKDOWN

GPC, A Joint Venture
Contract N00024-01-D-4018

DISTRIBUTION STATEMENT A: APPROVED FOR PUBLIC RELEASE; DISTRIBUTION IS UNLIMITED.

PUBLISHED BY DIRECTION OF COMMANDER, NAVAL SEA SYSTEMS COMMAND.

Downloaded from http://www.everyspec.com

Downloaded from http://www.everyspec.com

SS500-B1-MMO-010

0910-LP-101-1820

TECHNICAL MANUAL

STANDARD NAVY DOUBLE-LOCK RECOMPRESSION CHAMBER SYSTEM

DESCRIPTION, OPERATION, MAINTENANCE,
AND ILLUSTRATED PARTS BREAKDOWN

GPC, A Joint Venture
Contract N00024-01-D-4018

DISTRIBUTION STATEMENT A: APPROVED FOR PUBLIC RELEASE; DISTRIBUTION IS UNLIMITED.

PUBLISHED BY DIRECTION OF COMMANDER, NAVAL SEA SYSTEMS COMMAND.

MARCH 22, 2004

Change A December 1, 2007

Downloaded from http://www.everyspec.com

DATE OF ISSUE:

Original .....0..... March 22, 2004
Change A ..... A ..... December 1, 2007

TOTAL NUMBER OF PAGES IN THIS PUBLICATION IS 318, CONSISTING OF THE FOLLOWING:

Page No.	Change No.
Title	A
A – C	A
Change Record-1	A
Change Record-2 blank	0
Certification Sheet-1	A
Certification Sheet-2	0
Approval and Procurement-1	A
Approval and Procurement-2 blank	0
i – v	0
vi – vii	A
viii – ix	0
x – xiv	A
xv – xxii	0
1-1 – 1-5	0
1-6 – 1-7	A
1-8 blank	0
2-1 – 2-11	0
2-12	A
2-13 – 2-18	0
2-19 – 2-20	A
3-1 – 3-5	0
3-6 blank	0
3-7 – 3-13	0
3-14 blank	0
3-15 – 3-28	0
4-1 – 4-5	0
4-6 blank	0
5-1 – 5-15	0
5-16 blank	0
6-1 – 6-11	0
6-12 – 6-14D	A
6-15 – 6-16	0
6-17 – 6-19	0
6-20	A
6-21 – 6-24	0
6-25	A
6-26	0
6-27 – 6-31	A
6-32 blank	A
7-1 – 7-5	0
7-6	A
7-7	0
7-8	A
7-9	0
7-10 – 7-12	A
7-13 blank	0
7-14	0
7-15	A
7-16 – 7-20	0
7-21 - 7-23	A
7-24 – 7-30	0
7-31 blank	0
7-32	0
7-33 – 7-34	A
7-35 blank	0
7-36	0
7-37	A
7-38 – 7-40	0
7-41 blank	0
7-42 – 7-51	0
7-52 – 7-53B	A
7-54 – 7-60	0
7-61 blank	0
7-62 – 7-66	0
7-67	A
7-68	0

Downloaded from http://www.everyspec.com

Page No.	Change No.
7-69	A
7-70 – 7-72	0
7-73 – 7-74	A
7-75 – 7-77	0
7-78 blank	0
8-1 – 8-4	0
A-1	0
A-2 blank	0
A-3	A
A-4 – A-16	0
A-17	A
A-18	0
A-19	A
A-20 – A-21	0
A-22 blank	0
A-23	A
A-24	0
A-25	A
A-26 blank	0
A-27	A
A-28 – A-34	0
A-35	A
A-36 – A-39	0
A-40 blank	0
A-41	A
A-42 – A-44	0

Page No.	Change No.
A-45	A
A-46 – A-47	0
A-48 blank	0
A-49	A
A-50 – A-51	0
A-52 blank	0
B-1	0
B-2 blank	0
B-3 – B5	A
B-6	0
B-7 – B-9	A
B-10	0
B-11	A
B-12	0
B-13 – B-15	A
B-16	0
C-1	0
C-2 blank	0
C-3 – C-7	0
C-8	A
C-9	0
C-10 – C-11	A
C-12	0
C-13	A
C-14 – C-19	0
C-20 blank	0

Downloaded from http://www.everyspec.com

THIS PAGE INTENTIONALLY BLANK.

Downloaded from http://www.everyspec.com

CHANGE RECORD

Change No.	Date	Title and/or Brief Description	Signature of Validating Officer
Change A	12/01/07	Updated Table of Contents. Corrected valve part numbers and added sections 6-4.4.4 through 6-4.4.6. Added replacement component to Table 7-2. Corrected Table 7-20 and added Table 7-20A. Incorporated ECP D07000-0025, ECP D07000-1006, ECP D07000-1008, ECP D07000-1010, ECP D07000-1020, and ECP D07000-1023. Modified Operational Procedure (OP)-4 to correct procedural error. Modified Emergency Procedures (EP)-3 and EP-6 to correct procedural errors.	RMW

Downloaded from http://www.everyspec.com

THIS PAGE INTENTIONALLY LEFT BLANK

Downloaded from http://www.everyspec.com

NAVSEA TECHNICAL MANUAL CERTIFICATION SHEET

NAVSEA 9086/11 (8/88)

TM Identification Number	Publication Date
SS500-B1-MMO-010	March 22, 2004

Change No. Change A Revision No. _____ Volume No. _____ Part No. _____
Book No. _____ Chapter No. _____ Other No.
TM Specification. TMCR NO. NDMS-070057-000

Title: Standard Navy Double-Lock Recompression Chamber System

FOR CHANGES AND REVISIONS: (Indicate "NA" if an item is not applicable)

Purpose of Change/Revision: : Modify repair procedures 6-4.4.1 through 6-4.4.3 and add sections 6-4.4 through 6-4.4.6. Add replacement component to Table 7-2. Modify Table 7-20 and Add Table 7-A.Modify OP4, EP-3, and EP-6 to correct procedural errors.

TM/Change/Revision Numbers Superseded: Original
TMDER/ACN Numbers Incorporated: NA
Ship or Equipment Alteration/Field Change (FC)/Engineering Change (EC) Numbers Incorporated: NA

CERTIFICATION STATEMENT

This is to certify that responsible NAVSEA activities have reviewed the basic technical manual ( ), revision ( ), or change (X) for acquisition compliance, technical coverage, and printing quality. This form is for internal NAVSEA management use only, and does not imply contractual approval or acceptance of the technical manual by the Government, nor relieve the contractor of any responsibility for delivering the technical manual in accordance with the contract requirements.

NAVSEA SIGNATURES

Activity	Name	Signature	Organization	Code	Date
Acquisition					
Technical	Ryan Webb	Ryan Webb	NAVSEA	00C35	2/8/08
Printing Release	Robert C. Whaley	Robert C. Whaley	NAVSEA	DOC3	2/8/08

Downloaded from http://www.everyspec.com

NAVSEA TECHNICAL MANUAL
CERTIFICATION SHEET

NAVSEA 9086/11 (8/88)

SYNOPSIS OF CHANGE: Generally describe each significant technical addition, deletion, and change. Use additional pages as necessary.

Downloaded from http://www.everyspec.com

APPROVAL AND PROCUREMENT RECORD PAGE

APPROVAL DATA FOR:

TITLE OF MANUAL: STANDARD NAVY DOUBLE-LOCK RECOMPRESSION CHAMBER SYSTEM DESCRIPTION, OPERATION, MAINTENANCE, AND ILLUSTRATED PARTS BREAKDOWN

APPROVAL AUTHORITY: NAVAL SEA SYSTEMS COMMAND, CODE 00C

CONTRACT NUMBER	QUANTITY OF MANUALS
N00024-01-D-4018	1

REMARKS:
NONE

CERTIFICATION: DATE: December 1, 2007

It is hereby certified that the Technical Manual for the STANDARD NAVY DOUBLE-LOCK RECOMPRESSION CHAMBER SYSTEM, to be certified under contract number N00024-01-D-4018, has been approved by the approval authority shown above.

ESSM
Warehouse 12
FISC, Cheatham Annex
Williamsburg, VA 23185

Downloaded from http://www.everyspec.com

THIS PAGE INTENTIONALLY LEFT BLANK

Downloaded from http://www.everyspec.com

TABLE OF CONTENTS

CHAPTER	TITLE	PAGE
LIST OF APPENDICES		viii
LIST OF FIGURES		ix
LIST OF TABLES		xii
FOREWORD		xiv
LIST OF ACRONYMS AND ABBREVIATIONS		xv
SAFETY SUMMARY		xvii
1	**GENERAL INFORMATION AND SAFETY PRECAUTIONS**	
1-1	INTRODUCTION	1-1
1-1.1	PURPOSE	1-1
1-1.2	SCOPE	1-1
1-2	GENERAL DESCRIPTION	1-1
1-3	COMPONENT DESCRIPTION	1-2
1-3.1	SNDLRCS VAN	1-2
1-3.2	RECOMPRESSION CHAMBER	1-3
1-3.2.1	Instrumentation	1-3
1-3.3	AIR SYSTEM	1-3
1-3.4	ENVIRONMENTAL CONTROL SYSTEM	1-3
1-3.5	ELECTRICAL SYSTEM	1-3
1-3.5.1	Uninterruptible Power Supply	1-4
1-3.6	OXYGEN SYSTEM	1-4
1-4	CONFIGURATION OPTIONS	1-4
1-5	REFERENCE INFORMATION	1-6
2	**OPERATION**	
2-1	INTRODUCTION	2-1
2-1.1	PURPOSE	2-1
2-1.2	SCOPE	2-1
2-1.3	MANNING REQUIREMENTS	2-1
2-1.4	SAFETY REQUIREMENTS	2-1
2-2	OPERATING PROCEDURES	2-1
2-3	EMERGENCY PROCEDURES	2-2
2-4	ELECTRICAL SUPPLY AND CONTROL	2-2
2-4.1	MANUAL BUS TRANSFER (MBT) SWITCH	2-2

Downloaded from http://www.everyspec.com

TABLE OF CONTENTS (CONTD)

CHAPTER TITLE PAGE

2 OPERATION (Contd)

2-4.2	ELECTRICAL POWER CONNECTIONS	2-3
2-4.2.1	208-Volt Power Connection	2-4
2-4.2.2	440-Volt Power Connection	2-4
2-4.2.3	Input Voltage Selection	2-4
2-4.3	POWER DISTRIBUTION PANEL	2-4
2-4.3.1	Ground-Fault Interrupter (GFI) Breakers	2-4
2-4.3.2	Environmental Control System (ECS) Supply Breaker	2-4
2-4.3.3	Forward Heat and Ventilation Air Conditioning Breaker	2-5
2-4.3.4	Outlet Breaker #1	2-5
2-4.3.5	Uninterruptible Power Supply (UPS) Breaker	2-5
2-4.3.6	After Heat and Ventilation Air Conditioning Breaker	2-5
2-4.3.7	Spare Breaker	2-5
2-4.3.8	Outlet Breaker #2	2-5
2-4.3.9	Lighting Breaker	2-5
2-4.3.10	Master Breaker	2-5
2-4.4	UNINTERRUPTIBLE POWER SUPPLY (UPS) AND TRANSFORMER	2-5
2-5	CONTROLS AND INDICATORS	2-6
2-5.1	SNDLRCS CONTROL CONSOLE	2-6
2-5.2	HP AIR REDUCING STATION	2-8
2-5.3	OXYGEN (O_2) REDUCING STATION	2-10
2-5.4	EXTERNAL COMPRESSED GAS SUPPLY CONNECTIONS	2-12
2-5.5	COMMUNICATION SYSTEM	2-13
2-5.5.1	Control Console Communications Panel	2-13
2-5.5.2	Interior Communications Panel	2-13
2-5.6	AIR SAMPLING EQUIPMENT AND CONNECTIONS	2-14
2-5.6.1	Air Sampling Manifold and Flowmeter	2-14
2-5.6.2	Air Sample Monitors	2-14
2-5.6.3	Calibration Sample Gas Cylinder	2-15
2-5.7	ENVIRONMENTAL CONTROL SYSTEM (ECS)	2-15
2-5.7.1	Environmental Control System Compressor	2-15
2-5.7.2	Environmental Control System Heat Exchanger	2-16
2-5.8	BUILT-IN BREATHING SYSTEM (BIBS)	2-16
2-5.8.1	BIBS Manifolds	2-16
2-5.8.2	BIBS Exhaust Back Pressure Regulator	2-17
2-5.9	CARBON DIOXIDE (CO_2) SCRUBBER	2-17
2-6	SAFETY COMPONENTS AND SETPOINTS	2-18
2-7	SUPPORT COMPONENTS	2-19
2-7.1	FLY AWAY DIVE SYSTEM (FADS) III	2-19
2-7.2	HP AIR COMPRESSOR	2-19
2-7.3	ELECTRICAL POWER AND GENERATORS	2-20

Downloaded from http://www.everyspec.com

TABLE OF CONTENTS (CONTD)

CHAPTER	TITLE	PAGE
3	**FUNCTIONAL DESCRIPTION**	
3-1	INTRODUCTION	3-1
3-2	SYSTEM DESCRIPTION	3-1
3-2.1	FUNCTIONS OF SNDLRCS SYSTEM	3-1
3-2.2	SNDLRCS VAN	3-2
3-2.3	ELECTRICAL POWER AND LIGHTING SYSTEM	3-2
3-2.3.1	SNDLRCS Van Grounding	3-2
3-2.3.2	Power Receptacle Box	3-2
3-2.3.3	Manual Bus Transfer (MBT) Switch	3-3
3-2.3.4	Power Distribution Panel	3-4
3-2.3.5	Uninterruptible Power Supply (UPS) and Transformer	3-4
3-2.3.6	Electrical Schematics	3-5
3-2.4	RECOMPRESSION CHAMBER PIPING AND INSTRUMENTATION	3-5
3-2.5	CHAMBER CONTROL CONSOLE	3-15
3-2.5.1	Inner and Outer Lock Depth Gauges	3-15
3-2.5.2	IL and OL Light Switches	3-15
3-2.5.3	IL Carbon Dioxide (CO_2) Scrubber Switch	3-15
3-2.5.4	IL Environmental Control System (ECS) Switch	3-15
3-2.5.5	Chamber Communications Panel	3-15
3-2.5.6	IL and OL Fast Exhaust Valves	3-16
3-2.5.7	IL and OL Low-Pressure (LP) Air Pressurization Valves	3-16
3-2.5.8	Oxygen (O_2) Analyzer	3-16
3-2.5.9	CO_2 Analyzer	3-16
3-2.5.10	Primary and Secondary LP Air Supply Gauges	3-16
3-2.5.11	Chamber Control Console Gauge Valves	3-16
3-2.5.12	Primary and Secondary LP Air Cross Connect Valves	3-16
3-2.5.13	Primary and Secondary LP Air Shutoff Valves	3-16
3-2.5.14	Primary and Secondary O_2 Supply Valves	3-16
3-2.5.15	LP Mixed Gas Shutoff Valve	3-16
3-2.5.16	LP Mixed Gas Pressure Gauge	3-17
3-2.5.17	LP O_2 Supply Gauge	3-17
3-2.5.18	IL Slow Exhaust Valve	3-17
3-2.6	AIR/O_2/MIXED GAS SYSTEMS	3-17
3-2.6.1	Air Supply Rack Assembly (ASRA)	3-17
3-2.6.1.1	HP Hose Assemblies	3-18
3-2.6.1.2	Scuba Charge Hose Assembly	3-18
3-2.6.2	HP Air Reducing Station	3-18
3-2.6.2.1	Primary and Secondary HP Air Supply Valves	3-19
3-2.6.2.2	Primary and Secondary HP Air Connectors	3-19
3-2.6.2.3	Primary and Secondary LP Air Relief Valves	3-19
3-2.6.2.4	Primary and Secondary LP Air Supply Gauges	3-19

Downloaded from http://www.everyspec.com

TABLE OF CONTENTS (CONTD)

CHAPTER	TITLE	PAGE
3	**FUNCTIONAL DESCRIPTION (Contd)**	
3-2.6.2.5	Primary and Secondary HP Air Supply Gauges	3-20
3-2.6.2.6	Primary and Secondary HP Air Regulators	3-20
3-2.6.2.7	HP Air Reducing Station Gauge Isolation Valves	3-20
3-2.6.3	Oxygen Reducing Station	3-20
3-2.6.3.1	Primary and Secondary HP Oxygen Regulators	3-20
3-2.6.3.2	Primary and Secondary LP Oxygen Supply Gauges	3-20
3-2.6.3.3	Primary and Secondary HP Oxygen Supply Gauges	3-21
3-2.6.3.4	Primary and Secondary HP Oxygen External Supply Shutoff Valves	3-21
3-2.6.3.5	Oxygen Reducing Station Gauge Isolation Valves	3-21
3-2.6.4	External Compressed Gas Supply Connections	3-21
3-2.7	CHAMBER COMMUNICATIONS	3-22
3-2.7.1	Primary Chamber Communications System	3-22
3-2.7.2	Secondary Chamber Communications System	3-23
3-2.8	OXYGEN (O_2) ANALYZER	3-23
3-2.9	CARBON DIOXIDE (CO_2) ANALYZER	3-24
3-2.10	ENVIRONMENTAL CONTROL SYSTEM (ECS)	3-25
3-2.11	BUILT-IN BREATHING SYSTEM (BIBS)	3-25
3-2.12	CO_2 SCRUBBER ASSEMBLY	3-27
3-2.13	ADDITIONAL SUPPORT EQUIPMENT	3-28
3-2.13.1	Air Compressor	3-28
3-2.13.2	OSRA and HOSRA	3-28
3-2.13.3	NATO Mating Ring	3-28
3-2.13.4	Generator	3-28
4	**SCHEDULED MAINTENANCE**	
4-1	INTRODUCTION	4-1
4-1.1	PURPOSE	4-1
4-1.2	SCOPE	4-1
4-1.3	ARRANGEMENT	4-2
4-1.4	MAINTENANCE CONTROL	4-2
4-2	PLANNED MAINTENANCE SYSTEM (PMS)	4-2
4-3	GENERAL MAINTENANCE INSTRUCTIONS	4-3
4-3.1	REENTRY CONTROL (REC)	4-3
4-3.2	TEST EQUIPMENT, TOOLS, AND CONSUMABLE SUPPLIES	4-3
4-3.3	DISASSEMBLY AND REPLACEMENT OF PARTS	4-3
4-3.4	CLEANLINESS	4-3
4-3.4.1	Precleaning and Leak-Check Solution	4-4
4-3.4.2	NOC Cleaning	4-4
4-3.5	LUBRICANTS	4-4

Downloaded from http://www.everyspec.com

TABLE OF CONTENTS (CONTD)

CHAPTER	TITLE	PAGE
4	**SCHEDULED MAINTENANCE (Contd)**	
4-3.6	PAINTING	4-4
4-4	SCHEDULED MAINTENANCE REQUIREMENTS	4-4
4-4.1	MAINTENANCE INDEX PAGE (MIP)	4-4
4-4.2	MAINTENANCE REQUIREMENT CARDS (MRCs)	4-5
4-4.3	PARTS AVAILABILTY	4-5
4-5	OVERHAUL/MAINTENANCE CONCEPT	4-5
5	**TROUBLESHOOTING**	
5-1	INTRODUCTION	5-1
5-2	TROUBLESHOOTING PROCEDURES	5-1
5-3	CORRECTIVE MAINTENANCE PROCEDURES	5-1
5-4	REFERENCE PUBLICATIONS	5-2
5-5	FAILURE ANALYSIS REPORTING	5-2
5-6	TROUBLESHOOTING INDEX	5-2
5-7	TROUBLESHOOTING TABLES	5-3
6	**CORRECTIVE MAINTENANCE**	
6-1	INTRODUCTION	6-1
6-2	GENERAL REPAIR INFORMATION	6-1
6-2.1	MAINTENANCE PARTS	6-1
6-3	SAFETY REQUIREMENTS	6-2
6-4	FAILURE ANALYSIS REPORTING (FAR)	6-2
6-5	REENTRY CONTROL (REC)	6-2
6-6	VALVE IDENTIFICATION, REMOVAL, REPAIR, AND REINSTALLATION	6-3
6-6.1	GAUGE ISOLATION AND TEST VALVES	6-3
6-6.1.1	Gauge Isolation and Test Valve Removal	6-4
6-6.1.2	Gauge Isolation and Test Valve Repair	6-5
6-6.1.3	Gauge Isolation and Test Valve Reinstallation	6-5
6-6.2	ISOLATION BALL VALVES	6-5
6-6.2.1	Isolation Ball Valve Removal	6-8
6-6.2.2	Isolation Ball Valve Disassembly and Reassembly	6-9
6-6.2.3	Isolation Ball Valve Reinstallation	6-10
6-6.3	NEEDLE CONTROL VALVES (MODELS B-18VF8-G AND B-18VF8-ST)	6-10
6-6.3.1	Needle Control Valve Removal	6-11
6-6.3.2	Needle Control Valve Disassembly and Reassembly	6-11
6-6.3.3	Needle Control Valve Reinstallation	6-12

Downloaded from http://www.everyspec.com

TABLE OF CONTENTS (CONTD)

CHAPTER	TITLE	PAGE
6	**CORRECTIVE MAINTENANCE (Contd)**	
6-6.4	1-INCH SOFT SEAT NEEDLE CONTROL VALVE (MODELS 818051KR and A8187515KR)	6-12
6-6.4.1	1-Inch Soft Seat Angle Needle Control Valve Removal	6-13
6-6.4.2	1-Inch Soft Seat Angle Needle Control Valve Disassembly, Inspection, Repair, and Reassembly	6-14
6-6.4.3	1-Inch Soft Seat Angle Needle Control Valve Reinstallation	6-14A
6-6.4.4	1-Inch Soft Seat Needle Control Valve Removal	6-14A
6-6.4.5	1-Inch Soft Seat Needle Control Valve Disassembly, Inspection, Repair, and Reassembly	6-14B
6-6.4.6	1-Inch Soft Seat Needle Control Valve Reinstallation	6-14C
6-6.5	HP ISOLATION VALVE (MODEL G2SGM8-08C)	6-14D
6-6.5.1	HP Isolation Valve Removal	6-15
6-6.5.2	HP Isolation Valve Disassembly, Inspection, Repair, and Reassembly	6-15
6-6.5.3	HP Isolation Valve Reinstallation	6-16
6-6.6	$^1/_2$-INCH NEEDLE VALVE (MODEL M-6NRVCO8-M)	6-17
6-6.6.1	$^1/_2$-Inch Needle Valve Removal	6-17
6-6.6.2	$^1/_2$-Inch Needle Valve Disassembly, Inspection, Repair, and Reassembly	6-18
6-6.6.3	$^1/_2$-Inch Needle Valve Reinstallation	6-19
6-6.7	RELIEF VALVES	6-19
6-6.8	SYSTEM CHECK VALVES	6-21
6-6.8.1	System Check Valve Removal	6-22
6-6.8.2	System Check Valve Disassembly, Inspection, Repair, and Reassembly	6-22
6-6.8.3	System Check Valve Reinstallation	6-22
6-7	PIPING SUPPORT COMPONENT IDENTIFICATION, REPLACEMENT AND REPAIR	6-23
6-7.1	SYSTEM FILTERS	6-23
6-7.1.1	Filter Removal	6-24
6-7.1.2	Filter Disassembly, Inspection, and Reassembly	6-24
6-7.1.3	Filter Reinstallation	6-25
6-7.2	SYSTEM PRESSURE REGULATORS	6-25
6-7.2.1	System Pressure Regulator Removal	6-26
6-7.2.2	System Pressure Regulator Reinstallation	6-27
6-7.3	SYSTEM GAUGES	6-27
6-7.4	BIBS COMPONENTS	6-28
6-8	ELECTRICAL COMPONENT IDENTIFICATION, REPLACEMENT AND REPAIR	6-29
6-8.1	CARBON DIOXIDE (CO_2) SCRUBBER	6-29
6-8.1.1	CO_2 Scrubber Absorbent Material Replacement	6-29

Downloaded from http://www.everyspec.com

TABLE OF CONTENTS (CONTD)

CHAPTER	TITLE	PAGE
6	**CORRECTIVE MAINTENANCE (Contd)**	
6-8.2	ELECTRICAL AND LIGHTING SYSTEMS	6-30
6-8.3	UNINTERRUPTIBLE POWER SUPPLY (UPS) SYSTEM	6-30
6-8.4	GAS ANALYZERS	6-30
6-8.5	HEATING AND AIR CONDITIONING SYSTEMS	6-30
6-9	SNDLRCS VAN	6-30
6-9.1	REPAIRS OF LEAKS	6-30
6-9.2	REPAIRS OF DOORS, DOGS, AND GASKETS	6-30
6-9.3	REPAIRS TO FLOORS AND STRUCTURAL COMPONENTS	6-31
6-9.4	REPAIRS TO OPERATOR VESTIBULE	6-31
7	**ILLUSTRATED PARTS BREAKDOWN**	
7-1	INTRODUCTION	7-1
7-2	PRIME VENDOR PROGRAM	7-1
7-3	COMMERCIAL AND GOVERNMENT ENTITY (CAGE) CODES AND MANUFACTURERS	7-2
7-4	PARTS LIST COLUMN DEFINITIONS	7-5
7-4.1	FIG./INDEX NUMBER	7-5
7-4.2	CAGE CODE	7-5
7-4.3	PART NUMBER	7-5
7-4.4	DESCRIPTION	7-5
7-4.5	QTY.	7-5
7-5	SNDLRCS FIGURE INDEX	7-6
7-6	ILLUSTRATIONS AND PARTS LISTS	7-10
8	**INSTALLATION**	
8-1	INTRODUCTION	8-1
8-2	STARTUP, SHUTDOWN, AND PREPARATION FOR SHIPMENT/ LAYUP	8-1
8-3	TRANSPORTATION AND SHIPPING	8-1
8-4	SITE INFORMATION	8-1
8-4.1	ENVIRONMENTAL CONDITIONS	8-1
8-5	TOOLS AND MATERIAL REQUIRED FOR INSTALLATION	8-2
8-6	UNPACKING AND REPACKING	8-2
8-7	INPUT REQUIREMENTS	8-2
8-8	INSTALLATION PROCEDURES	8-3
8-9	INSTALLATION CHECKOUT	8-4

Downloaded from http://www.everyspec.com

LIST OF APPENDICES

APPENDIX A STANDARD NAVY DOUBLE-LOCK RECOMPRESSION CHAMBER SYSTEM (SNDLRCS) OPERATING PROCEDURES

	OPERATING PROCEDURES LIST	A-1
OP-1	SNDLRCS SETUP	A-3
OP-2	MEDICAL LOCK OPERATION	A-17
OP-3	SNDLRCS MODIFIED SHUTDOWN	A-19
OP-4	SNDLRCS MODIFIED STARTUP	A-23
OP-5	SNDLRCS SHUTDOWN FOR SHIPMENT/LAYUP	A-27
OP-6	AIR SUPPLY RACK ASSEMBLY (ASRA) CHARGING PROCEDURES	A-35
OP-7	PROCEDURES FOR CHARGING AIR SUPPLY RACK ASSEMBLY (ASRA) DURING OPERATION	A-41
OP-8	SCUBA BOTTLE CHARGING PROCEDURES	A-45
OP-9	OXYGEN BOTTLE IN-PLACE CHARGING PROCEDURES	A-49

APPENDIX B STANDARD NAVY DOUBLE-LOCK RECOMPRESSION CHAMBER SYSTEM (SNDLRCS) EMERGENCY PROCEDURES

	EMERGENCY PROCEDURES LIST	B-1
EP-1	RAPID LOSS OF CHAMBER PRESSURE	B-3
EP-2	INCREASE IN CHAMBER PRESSURE	B-5
EP-3	CONTAMINATED ATMOSPHERE	B-7
EP-4	FIRE IN CHAMBER	B-9
EP-5	LOSS OF OXYGEN	B-11
EP-6	LOSS OF PRIMARY AIR SUPPLY	B-13
EP-7	LOSS OF PRIMARY POWER	B-15

APPENDIX C STANDARD NAVY DOUBLE-LOCK RECOMPRESSION CHAMBER SYSTEM (SNDLRCS) SPARE PARTS

	SPARE PARTS LISTS	C-1
C-1	AIR SUPPLY RACK ASSEMBLY (ASRA) SPARE PARTS – DRAWING NO. 6961898	C-3
C-2	MEDICAL LOCK SPARE PARTS – DRAWING NO. 7317768	C-6
C-3	RECOMPRESSION CHAMBER SPARE PARTS – DRAWING NO. 7317812	C-7
C-4	OXYGEN REDUCING STATION SPARE PARTS – DRAWING NO. 7539548	C-14
C-5	HP AIR REDUCING STATION SPARE PARTS – DRAWING NO. 7539554	C-17

Downloaded from http://www.everyspec.com

LIST OF FIGURES

FIGURE	TITLE	PAGE
1-1	SNDLRCS Van	1-2
1-2	SNDLRCS Van Cutaway View	1-3
1-3	Configuration Options	1-5
2-1	Power Distribution Panel (left) and Manual Bus Transfer (MBT) Switch	2-3
2-2	Power Receptacle Box	2-3
2-3	Power Distribution Panel (open)	2-4
2-4	Uninterruptible Power Supply and 24-Volt Transformer	2-5
2-5	Chamber Control Console	2-6
2-6	HP Air Reducing Station	2-9
2-7	Oxygen Reducing Station	2-11
2-8	External Compressed Gas Supply Connections	2-12
2-9	Control Console Communications Panel	2-13
2-10	Interior Communications Panel	2-13
2-11	Air Sampling Manifold and Flowmeter	2-14
2-12	Air Sample Monitors	2-14
2-13	Calibration Sample Gas Cylinder	2-15
2-14	Environmental Control System (ECS) Compressor	2-15
2-15	Environmental Control System (ECS) Heat Exchanger	2-16
2-16	BIBS Manifolds (Inner Lock)	2-16
2-17	BIBS Exhaust Back Pressure Regulator (BPR)	2-17
2-18	Carbon Dioxide (CO_2) Scrubber	2-18
3-1	Power Receptacle Box	3-3
3-2	Manual Bus Transfer (MBT) Switch	3-3
3-3	Power Distribution Panel (50-amp Main Breaker)	3-4
3-4	Uninterruptible Power Supply and Transformer	3-4
3-5	SNDLRCS Van Power and Lighting Schematic	3-7
3-6	SNDLRCS Recompression Chamber Electrical Schematic – Part 1	3-8
3-7	SNDLRCS Recompression Chamber Electrical Schematic – Part 2	3-9
3-8	Chamber Piping Schematic	3-10
3-9	Oxygen System Piping Schematic	3-11
3-10	HP Air System Piping Schematic	3-12
3-11	Mix Gas System Piping Schematic	3-13
3-12	Chamber Control Console	3-15
3-13	HP Air Reducing Station	3-19
3-14	Oxygen (O_2) Reducing Station	3-21
3-15	External Compressed Gas Supply Connections	3-22
3-16	Double-Lock Chamber Communicator	3-22
3-17	Interior Communications Panel	3-23
3-18	Oxygen (O_2) Analyzer (left) and Carbon Dioxide (CO_2) Analyzer	3-24
3-19	BIBS Manifolds (Inner Lock)	3-26
3-20	BIBS Exhaust Back Pressure Regulator	3-27
3-21	Carbon Dioxide (CO_2) Scrubber Assembly	3-27

Downloaded from http://www.everyspec.com

LIST OF FIGURES (CONTD)

FIGURE	TITLE	PAGE
4-1	Scope of Certification (SOC) Boundary	4-2
6-1	Gauge Isolation Needle Valve (PLC-10699)	6-4
6-2	$^1/_4$-Inch Isolation Ball Valve (B-62TF4)	6-5
6-3	$^1/_2$-Inch Isolation Ball Valve (B-63TF8)	6-6
6-4	1-Inch Isolation Ball Valve (B-65TF16)	6-7
6-5	$1^1/_2$ -Inch Isolation Ball Valve (SS-67TF24)	6-7
6-6	Three-Way Isolation Ball Valve (Model SS-62XTF4)	6-8
6-7	Series 60 Ball Valve Breakdown	6-9
6-8	$^1/_2$-Inch Needle Control Valves (Models B-18VF8-G and B-18VF8-ST)	6-10
6-9	Series 18 Needle Valve Breakdown	6-11
6-10	1-Inch Soft Seat Angle Needle Control Valve (Model A8187515KR)	6-13
6-10A	1-Inch Soft Seat Needle Control Valve (Model 8180515KR)	6-14B
6-11	HP Isolation Valve (Model G2SGM8-08C)	6-15
6-12	HP O_2 External Supply Shutoff Valve (Model M-6NRVCO8-M)	6-17
6-13	LP Relief Valve (Model 19KDDK300)	6-19
6-14	HP Air Relief Valve (Model 521FEBKV0300 or 521FEBZMX1)	6-20
6-15	Atmospheric Relief Valve (Model M5132-8M(L)-110M ASME)	6-20
6-16	LP Mixed Gas and O_2 Relief Valve (Model B-8CPA2-150)	6-21
6-17	C Series Check Valve (Models B-8C4-$^1/_3$ and B-16C4-$^1/_3$)	6-21
6-18	Model B-8TF2-15 Filter	6-23
6-19	Models U956 and 43 26 G-20 Filters	6-23
6-20	HP Regulator (Series 44)	6-25
6-21	BIBS Exhaust Regulator (Model 26-2912-282A)	6-26
6-22	BIBS Regulator and Mask Assembly	6-28
7-1	SNDLRCS Van – Top View	7-10
7-2	SNDLRCS Van – Port Side View	7-11
7-3	Air Supply Rack Assembly (ASRA)	7-12
7-4	Pressure Vessel General Assembly	7-14
7-5	Recompression Chamber Viewport	7-16
7-6	Recompression Chamber Doors	7-18
7-7	Chamber Control Console	7-20
7-7A	Door Mounted ASRA HP Air Transition Panel	7-23
7-8	Bulkhead Transition Panel	7-24
7-9	O_2/CO_2 Calibration Gas Kit	7-26
7-10	Oxygen Reducing Station – Oxygen Bottles	7-27
7-11	Oxygen Reducing Station Panel	7-28
7-12	High-Pressure (HP) Air Reducing Station – Front View	7-32
7-13	HP Air Reducing Station – Side View	7-36
7-14	Built-In Breathing System (BIBS) Mask	7-38

Downloaded from http://www.everyspec.com

LIST OF FIGURES (CONTD)

FIGURE	TITLE	PAGE
7-15	Isolation Ball Valve (ALP-V-3, ALP-V-4, ALP-V-9, ALP-V-10, ALP-V-11, ALP-V-15, ATM-V-2, ATM-V-4, ATM-V-6, ATM-V-8, ATM-V-9, ATM-V-11, ATM-V-12, ATM-V-13, ATM-V-14, ECS-V-1, ECS-V-2, EQ-V-1, EQ-V-2, EQ-V-4, EQ-V-5, EXH-V-1, EXH-V-2, EXH-V-3, EXH-V-4, EXH-V-5, EXH-V-7, EXH-V-8, EXH-V-9)	7-42
7-16	System Check Valve (ALP-V-6, ALP-V-12, ALP-V-14, ALP-V-16, MLP-V-5, OLP-V-7, OLP-V-9)	7-45
7-17	Needle Control Valve (MLP-V-2, MLP-V-4, OLP-V-2, OLP-V-4, OLP-V-6, OLP-V-8)	7-46
7-18	Gauge Isolation and Test Needle Valve (AHP-V-103, AHP-V-107, ALP-V-2, ALP-V-8, ALP-V-106, ALP-V-110, ATM-V-1, ATM-V-3, ATM-V-5, ATM-V-7, EQ-V-3, MLP-V-3, OLP-V-5)	7-48
7-19	Gauge Isolation and Test Needle Valve (OHP-V-202, OHP-V-204, OLP-V-207, OLP-V-208)	7-50
7-20	1-Inch Soft Seat Needle Control Valve (EXH-V-6)	7-52
7-20A	1-Inch Soft Seat Angle Needle Control Valve (ALP-V-5, ALP-V-13)	7-53A
7-21	$^{1}/_{2}$-Inch Needle Valve (OHP-V-201, OHP-V-203)	7-54
7-22	HP Air Regulator (AHP-R-108, AHP-R-109)	7-56
7-23	HP Oxygen Regulator (OHP-R-205, OHP-R-206)	7-58
7-24	BIBS Exhaust Manifold Pressure Regulator (EXH-R-1, EXH-R-2)	7-62
7-25	LP Mixed Gas and Oxygen Relief Valve (MLP-V-1, OLP-V-1, OLP-V-3)	7-65
7-26	LP Air Reducer Outlet Relief Valve (ALP-V-104, ALP-V-105)	7-66
7-27	LP Air Supply Relief Valve (ALP-V-1, ALP-V-7)	7-68
7-28	Recompression Chamber Hull Relief Valve (ATM-V-10)	7-70
7-29	HP Air Supply Valve (AHP-V-101, AHP-V-102)	7-71
7-30	System Gauge (AHP-G-102, AHP-G-103, ALP-G-1, ALP-G-2, ALP-G-3, ALP-G-101, ALP-G-104, MLP-G-1, OHP-G-201, OHP-G-202, OLP-G-1, OLP-G-203, OLP-G-204)	7-72
7-31	Depth Gauge (PN-G-1, PN-G-2, PN-G-3, PN-G-4)	7-74
7-32	HP Air Supply Filter (AHP-F-1, AHP-F-2)	7-75
7-33	LP Air Supply Filter (ALP-F-1, ALP-F-2)	7-76
7-34	LP Oxygen and Mixed Gas Supply Filter (OLP-F-1, OLP-F-2, MLP-F-1)	7-77

Downloaded from http://www.everyspec.com

LIST OF TABLES

TABLE	TITLE	PAGE
1-1	SNDLRCS System Specifications	1-6
1-2	Reference Publications	1-7
1-3	Equipment, Accessories, and Documents Supplied	1-7
1-4	Documents Required, But Not Supplied	1-7
2-1	Chamber Control Console Components	2-7
2-2	HP Air Reducing Station Components	2-9
2-3	Oxygen (O_2) Reducing Station Components	2-10
2-4	Installed Safety Components and Setpoints	2-18
2-5	Electrical Generators and Recommended Loading	2-20
5-1	Troubleshooting Index	5-2
5-2	Electrical Power Systems	5-3
5-3	Lighting System Components	5-3
5-4	Heating and Air Conditioning Units	5-4
5-5	Analox Mini O2 DII Portable Oxygen (O_2) Analyzer	5-4
5-6	Analox CO_2 Buddy™ Sensor Lights and Audible Alarm Indications and Meanings	5-5
5-7	Valves, Piping and Pressure Vessel	5-6
5-8	Gauges	5-8
5-9	Chamber Communications System	5-9
5-10	Environmental Control System (ECS) Components	5-10
5-11	Oxygen (O_2) Supply System	5-11
5-12	HP Oxygen (O_2) Storage Rack	5-12
5-13	BIBS Mask Breathable Gas and Exhaust System	5-12
6-1	Gauge Isolation and Test Valves	6-3
6-2	Model B-62TF4 Isolation Ball Valves	6-5
6-3	Model B-63TF8 Isolation Ball Valves	6-6
6-4	Model B-65TF16/SS-51K-65 Isolation Ball Valves	6-7
6-5	Model SS-67TF24 Isolation Ball Valves	6-7
6-6	Three-Way Isolation Ball Valve (Model SS-62XTF4)	6-8
6-7	Needle Control Valves (Models B-18VF8-G and B-18VF8-ST)	6-10
6-8	1-Inch Angle Needle Control Valve (Model A8187515KR)	6-13
6-8A	1-Inch Needle Control Valves (Model 8180515KR)	6-14A
6-9	HP Isolation Valve (Model G2SGM8-08C)	6-15
6-10	$^1/_2$-Inch HP Isolation Valve (Model M-6NRVCO8-M)	6-17
6-11	Installed Relief Valves	6-19
6-12	$^1/_2$-Inch Check Valves (Model B-8C4-$^1/_3$)	6-21
6-13	1-Inch Check Valves (Model B-16C4-$^1/_3$)	6-21
6-14	Model B-8TF2-15 Filters	6-23
6-15	Models U956 and 43 26 G-20 Filters	6-23
6-16	Pressure Regulators	6-25
6-17	Repair Kits for System Pressure Regulators	6-26
6-18	Installed Gauges	6-27

Downloaded from http://www.everyspec.com

LIST OF TABLES (CONTD)

TABLE	TITLE	PAGE
6-19	BIBS Replacement Components	6-28
7-1	Parts List for SNDLRCS Van – Top View	7-10
7-2	Parts List for SNDLRCS Van – Port Side View	7-11
7-3	Parts List for Air Supply Rack Assembly (ASRA)	7-12
7-4	Parts List for Pressure Vessel General Assembly	7-15
7-5	Parts List for Recompression Chamber Viewport	7-17
7-6	Parts List for Recompression Chamber Doors	7-19
7-7	Parts List for Chamber Control Console	7-21
7-7A	Parts List for Door Mounted ASRA HP Air Transition Panel	7-23
7-8	Parts List for Bulkhead Transition Panel	7-25
7-9	Parts List for O_2/CO_2 Calibration Gas Kit	7-26
7-10	Parts List for Oxygen Reducing Station – Oxygen Bottles	7-27
7-11	Parts List for Oxygen Reducing Station Panel	7-29
7-12	Parts List for HP Air Reducing Station – Front View	7-33
7-13	Parts List for HP Air Reducing Station – Side View	7-37
7-14	Parts List for BIBS Mask	7-39
7-15	Parts List for Isolation Ball Valve	7-43
7-16	Parts List for System Check Valve	7-45
7-17	Parts List for Needle Control Valve	7-47
7-18	Parts List for Gauge Isolation and Test Needle Valve	7-49
7-19	Parts List for Gauge Isolation and Test Needle Valve	7-51
7-20	Parts List for 1-Inch Soft Seat Needle Control Valve	7-53
7-20A	Parts List for 1-Inch Soft Seat Angle Needle Control Valve	7-53B
7-21	Parts List for $^1/_2$-Inch Needle Valve	7-55
7-22	Parts List for HP Air Regulator	7-57
7-23	Parts List for HP Oxygen Regulator	7-59
7-24	Parts List for BIBS Exhaust Manifold Pressure Regulator	7-63
7-25	Parts List for LP Mixed Gas and Oxygen Relief Valve	7-65
7-26	Parts List for LP Air Reducer Outlet Relief Valve	7-67
7-27	Parts List for LP Air Supply Relief Valve	7-69
7-28	Parts List for Recompression Chamber Hull Relief Valve	7-70
7-29	Parts List for HP Air Supply Valve	7-71
7-30	Parts List for System Gauge	7-73
7-31	Parts List for Depth Gauge	7-74
7-32	Parts List for HP Air Supply Filter	7-75
7-33	Parts List for LP Air Supply Filter	7-76
7-34	Parts List for LP Oxygen and Mixed Gas Supply Filter	7-77
8-1	Environmental and Weather Conditions the SNDLRCS Can Withstand	8-2
C-1	Spare Parts for Air Supply Rack Assembly (ASRA)	C-3
C-2	Spare Parts for Medical Lock	C-6
C-3	Spare Parts for Recompression Chamber	C-7
C-4	Spare Parts for Oxygen Reducing Station	C-14
C-5	Spare Parts for HP Air Reducing Station	C-17

Downloaded from http://www.everyspec.com

FOREWORD

The purpose of this manual is to provide operation and maintenance procedures for the Standard Navy Double-Lock Recompression Chamber System (SNDLRCS). This system is designed to satisfy a Fleet operational requirement for a mobile, rugged, easy-to-use, low maintenance and safe recompression chamber to support surface decompression and diving disorders requiring recompression therapy. The SNDLRCS is also designed to interface with the Lightweight Dive System (LWDS) and the Fly Away Dive System (FADS) III Air and the Fly-away Mixed Gas System (FMGS), which are standardized surface supplied diving systems. The information in this manual is presented in eight chapters and three appendixes as follows:

Chapter 1—General Information
Chapter 2—Operation
Chapter 3—Functional Description
Chapter 4—Scheduled Maintenance
Chapter 5—Troubleshooting
Chapter 6—Corrective Maintenance
Chapter 7—Illustrated Parts Breakdown
Chapter 8—Installation
Appendix A—Operating Procedures
Appendix B—Emergency Procedures
Appendix C—Spare Parts

This manual contains the Naval Sea Systems Command (NAVSEA)-approved standard Operating Procedures (OP) and Emergency Procedures (EP) for the SNDLRCS. These represent the single approved set of OP and EP for operation of the SNDLRCS. The original copies in Appendix A and B shall be used to make additional working copies. Changes to the OP and EP will be issued as changes to this manual.

Ships, training activities, supply points, depots, Naval Shipyards, and Supervisors of Shipbuilding are requested to arrange for the maximum practical use and evaluation of NAVSEA technical manuals. All errors, omissions, discrepancies, and suggestions for improvement to NAVSEA technical manuals shall be reported to the following address on NAVSEA/SPAWAR Technical Manual Deficiency/Evaluation Report (TMDER), form NAVSEA 4160/1.

Commander
Code 5E30
NAVSURFWARCENDIV
4363 Missile Way
Port Hueneme, CA 93043-4307

To facilitate such reporting, three copies of form NAVSEA 4160/1 are included at the end of each bound part of each technical manual. Alternatively, this form can be submitted to the following Web address: http://nsda.phdnswc.navy.mil/tmder . Urgent priority technical manual deficiencies shall be reported by Naval message with transmission to the above address. Local message handling procedures shall be used. The technical manual deficiency shall identify each message processed by technical manual identification number and title.

Downloaded from http://www.everyspec.com

All feedback comments shall be thoroughly investigated and originators will be advised of action resulting therefrom. Extra copies of form NAVSEA 4160/1 may be requisitioned from the Naval Systems Data Support Activity, Code 5E30 at the above address. However, users are encouraged to transmit deficiency submittals via the Internet at the Web page listed on the preceding page.

LIST OF ACRONYMS AND ABBREVIATIONS

º, ºC, ºF	Degrees, Degrees Celsius, Degrees Fahrenheit
3M	Maintenance and Material Management
AC	Air Conditioner
ac	Alternating Current
amp	Amperes
ANU	Approved for Navy Use
APC	American Power Conversion
ASME	American Society of Mechanical Engineers
ASRA	Air Supply Rack Assembly
BIBS	Built-In Breathing System
BINCS	Business Identification Number Cross-reference System
BPR	Back Pressure Regulator
CAGE	Commercial and Government Entity (Code)
CCA	Control Console Assembly
cf	Cubic Feet
CGA	Compressed Gas Association
CO_2	Carbon Dioxide
COTS	Commercial Off-The-Shelf
dc	Direct Current
DLA	Defense Logistics Agency
DLSS	Diver Life Support System
DOT	Department of Transportation
DSCP	Defense Supply Center Philadelphia
ECS	Environmental Control System
EP	Emergency Procedures
FADS	Fly Away Dive System
FAR	Failure Analysis Report
FMGS	Fly-away Mixed Gas System
fsw	Feet of Seawater
FV	Floodable Volume
GFI	Ground-Fault Interrupter
HOSRA	Helium Oxygen Supply Rack Assembly
HP	High-Pressure
Hz	Hertz
IICL	International Institute of Container Leasors
IL	Inner Lock
in-lb	Inch Pounds
ISO	International Organization for Standardization
kVA	kilovolt amperes

Downloaded from http://www.everyspec.com

kW	kilowatts
lb	Pound(s)
LP	Low-Pressure
LWDS	Lightweight Dive System
MBT	Manual Bus Transfer
MGCCA	Mixed Gas Control Console Assembly
MIP	Maintenance Index Page
MIPR	Military Interdepartmental Purchase Request
mm	millimeter
MRC	Maintenance Requirement Card
NA	Not Applicable
NAVOSH	Navy Occupational Safety and Health
NAVSEA	Naval Sea Systems Command
NAVSUP	Naval Supply Systems Command
NID	Nonionic Detergent
NOC	Navy Oxygen Cleaner
NSN	National Stock Number
O_2	Oxygen
OL	Outer Lock
OP	Operating Procedures
OSRA	Oxygen Supply Rack Assembly
PMS	Planned Maintenance System
PN	Part Number
psi	Pounds Per Square Inch
psig	Pounds Per Square Inch Gauge
PV	Prime Vendor
Qty	Quantity
REC	Reentry Control
scf	Standard Cubic Feet
SNDL	Standard Navy Double-Lock
SNDLRCS	Standard Navy Double-Lock Recompression Chamber System
SOC	Scope of Certification
SYSCOM	NAVSEA System Command
TMDER	Technical Manual Deficiency/Evaluation Report
TRCS	Transportable Recompression Chamber System
TSP	Trisodium Phosphate
UPS	Uninterruptible Power Supply
UV	Ultra Violet
VCO	Swagelok O-ring Face Seal Fitting

Downloaded from http://www.everyspec.com

SAFETY SUMMARY

GENERAL

Personnel using the Standard Navy Double-Lock Recompression Chamber System (SNDLRCS) shall observe the safety precautions and procedures specified in this technical manual. Personnel must be thoroughly familiar with all safety practices and understand the potential hazards associated with the SNDLRCS before using or performing maintenance on the equipment. The following safety guidelines apply to operation and maintenance procedures in general and do not appear elsewhere in this publication, except by reference. Personnel must understand and comply with these guidelines during operation and maintenance of the SNDLRCS.

Standard Safety Precautions. Standard diving safety precautions, as stated in the latest revision of the *U.S. Navy Diving Manual*, NAVSEA SS521-AG-PRO-010, apply to surface supplied air diving operations using the SNDLRCS. Only approved replacement parts, lubricants, cleaning solutions, and sealant specified in this technical manual shall be used with this equipment. Substitution of parts or materials and omission or alteration of procedures stated herein is not authorized.

Forces Afloat. Forces afloat must also comply with the Navy Occupational Safety and Health (NAVOSH) Program Manual, OPNAVINST 5100.19 series.

Shore Activities. Shore activities must also comply with the Navy Occupational Safety and Health (NAVOSH) Program Manual, OPNAVINST 5100.23 series.

Special Notations. Dangers, warnings, cautions, and notes appearing in this technical manual must be followed in order to prevent hazards to personnel and damage to equipment. Personnel must be thoroughly familiar with all dangers, warnings, and cautions before operating or performing maintenance on this equipment. Safety notations used throughout the manual are as follows:

DANGER

Indicates a location, equipment, or system where an imminent hazard exists, capable of producing immediate injury or death to personnel or threatening the primary mission of the ship.

WARNING

Indicates a location, equipment, or system where a potential hazard exists capable of producing injury to personnel if approved procedures are not followed.

CAUTION

Indicates a situation in which a hazard could severely damage equipment, a system, or the ship, causing loss of mission capability if approved procedures are not followed.

NOTE

Highlights an essential operating or maintenance procedure, condition, or statement that must be emphasized.

Downloaded from http://www.everyspec.com

DANGERS

The following Dangers appear in the text of this manual and are given here for emphasis.

DANGER

Set the manual bus transfer (MBT) switch to the OFF position before connecting or disconnecting ANY electrical power supply cables from the power receptacle box. Failure to do so could cause death to personnel and damage to the equipment in the SNDLRCS van. (pp. 2-2, 3-2)

Failure to properly ground the SNDLRCS van may result in injury or death to personnel. (pp. 2-3, 3-2, 8-3)

Cleanliness is imperative in handling and maintaining oxygen or mixed gas systems. All tools and parts must be kept free of oil, grease, rust, or other contamination. Foreign substances within an assembly may result in equipment failure, explosion, fire, and possible injury or death to the diver. (p. 4-3)

Do not disassemble diving system components while a breathing gas circuit is pressurized. Failure to depressurize the system may result in damage to equipment, or injury or death to personnel. (p. 4-3)

Repair or replace worn or damaged components immediately with authorized replacement components. Failure of equipment during operation may result in injury or death to personnel. (pp. 4-3, 6-1)

Do not disassemble diving system components while system is pressurized. Failure to depressurize the system may result in damage to equipment, or injury or death to personnel. (p. 6-1)

Do not disassemble components while the HP Air Reducing Station is under pressure. Failure to observe this warning may result in injury or death to personnel. (pp. 6-3, 6-8, 6-11)

Do not disassemble components while the SNDLRCS or any of the associated systems are under pressure. Failure to observe this warning may result in injury or death to personnel. (pp. 6-15, 6-17, 6-22, 6-24, 6-26)

PRIMARY and SECONDARY tags must be affixed to Port A and Port C valve handles of the ASRA. Removal or swapping of tags can result in injury or death by changing air supply or pressure to the diver or system. (p. A-5)

The ASRA must be positioned and secure before operation.

Downloaded from http://www.everyspec.com

Movement during operation can result in equipment damage, personnel injury, or death. (p. A-5)

Ports A, B, and C on the ASRA must be depressurized whenever a port hose is removed from port connector. Failure to depressurize the system may result in damage to equipment, or injury or death to personnel. (p. A-28)

Failure to connect hose assembly strain relief can cause personnel injury or death if the hose separates or bursts. (pp. A-36, A-42, A-50)

Bank being charged must not simultaneously be providing air to the system. Failure of a compressor during charging can contaminate the air bank, and, if used to provide air supply to other components, can result in injury or death. (p. A-42)

Charging hoses must meet cleaning requirements of MIL-STD 1330. Contaminated hoses can result in explosion, fire, and/or personnel injury or death. (p. A-50)

WARNINGS

The following Warnings appear in the text of this manual and are given here for emphasis.

WARNING

Do not operate BIBS Exhaust Back Pressure Regulator (BPR) Bypass Valve (EXH-V-1 or EXH-V-3) deeper than 60 fsw. If BIBS Exhaust BPR fails at depths greater than 60 fsw, disconnect BIBS Mask Exhaust hose from BIBS Exhaust Manifold and exhaust to chamber atmosphere. Operation at depths greater than 60 fsw can cause pressure fluctuations at the diver's BIBS mask and place the diver at risk of high differential pressure, causing embolisms. (pp. 2-17, 3-26)

Carbon dioxide absorbent material will form alkali compounds when mixed with water. These compounds can irritate the eyes, throat, mucus membranes, and skin. Take appropriate precautions to avoid breathing absorbent material or getting it into eyes or on skin. Do not stand downwind of canister while filling. If not strictly observed, injury to personnel could result. (pp. 2-17, 6-29)

Do not use the last one-inch of carbon dioxide absorbent material in the storage container because dust accumulates at the bottom. If not strictly observed, injury to personnel could result. (p. 2-18)

Thoroughly settle the bed of carbon dioxide absorbent granules. If improperly filled, channels which permit gas to bypass the absorbent material may form, causing elevated levels of carbon dioxide in the

Downloaded from http://www.everyspec.com

breathing loop. Do not overfill the scrubber canister. If not strictly observed, injury to personnel could result. (p. 2-18)

Depressurize and tag the appropriate valves "DO NOT OPERATE" in accordance with PMS procedures prior to performing maintenance on any HP system. (pp. 6-3, 6-8, 6-11, 6-13, 6-15, 6-16, 6-17, 6-22, 6-24, 6-26)

Oxygen gas supports combustion and lowers the activation energy for any combustible material. Use only approved solvents and lubricants while performing maintenance to oxygen valves and piping to prevent explosion hazards. (pp. 6-17, 6-24, 6-26)

Do not overfill the carbon dioxide absorbent material cannister. The canister is filled to 1 inch below the top to prevent accumulation of excessive carbon dioxide absorbent material in the bottom of the canister. Failure to leave this space may cause personnel injury due to carbon dioxide absorbent material escaping during operation. (p. 6-29)

Service the absorbent material canister outdoors or in a well-ventilated area over a container suitable for disposal of expended absorbent. If not strictly observed, chemical burns to the skin, eyes, or lungs could result. (p. 6-29)

When filling the canister, thoroughly settle the carbon dioxide absorbent material filter bed. If improperly filled, channels may develop which would allow gases passing through the filter bed to bypass the absorbent material. This may cause high output concentrations of CO_2, causing personnel injury. (p. 6-29)

The fully equipped SNDLRCS van weighs 22,000 pounds (11 tons). Verify that all rigging components, cranes, or forklifts are rated to handle at least 30,000 pounds (15 tons) prior to lifting the unit from the transport vehicle. Limit the personnel in the immediate area to those required to rig, lift, and position the equipment. Stand clear of components during rigging and lifting. (p. 8-3)

Incorrect electrical hookup will cause equipment damage and/or personnel injury. It is imperative that the power source (ship, shore, or generator), the power panel receptacle and power cable, and the breaker are all set for the same voltage (either 440 volts or 208 volts). (p. A-4)

The SNDLRCS van contains pressurized oxygen flasks. Open van doors and allow space to ventilate prior to energizing electrical equipment. Turn on Van Oxygen Monitor and confirm that oxygen levels are not elevated. (p. A-4)

Downloaded from http://www.everyspec.com

When using SNDLRCS van oxygen bottles, remove caps for Primary and Secondary Oxygen on the outside of the Bulkhead Transition Panel to provide a vent path outside the van before bleeding down oxygen pressure. Failure to vent the system outside the van would cause a release of oxygen into the space, causing a fire hazard. If not using these oxygen bottles, proceed with step 50 below. (p. A-31)

Charge the ASRA only with an Approved for Navy Use (ANU) compressor with a moisture separator, filtration system, and a current air sample. Failure to use an approved air source may result in contamination of the air supply, causing equipment damage, personnel injury, or death. (pp. A-36, A-42)

Fittings must be properly tightened and O-rings must be properly seated when connecting hoses. Excessive tightening can damage threads. Fittings and O-rings that are not properly installed can allow high-pressure gas to escape and can result in injury. (pp. A-36, A-42, A-50)

Prior to bleeding HP air, clear all personnel from the area to avoid injury from flying debris. Operators must wear protective eyewear. Flying debris can cause personnel injury. (pp. A-38, A-43, A-44)

Charge SNDLRCS Oxygen Bottles only with an Approved for Navy Use (ANU) or certified booster assembly or transfer pump cleaned for oxygen service. Failure to use an approved oxygen source may result in contamination of the oxygen supply, causing equipment damage, personnel injury, or death. (p. A-50)

Do not exceed a charging rate of 70 psi per minute to prevent heat buildup in the piping system. Rapid pressurization can result in an esplosion hazard. (p. A-50)

Oxygen used to charge bottles must meet specifications of the *U.S. Navy Diving Manual*. Failure to use an approved oxygen source may result in contamination of the oxygen supply, causing equipment damage, personnel injury, or death. (p. A-50)

T-size bottles, originally furnished with the SNDLRCS, shall not be charged higher than 2400 psig. If K-size bottles are installed, the maximum allowable pressure shall not exceed 1800 psig. The operator must verify which size and pressure rating for the bottles are in place before charging to prevent failure of the cylinder or its rupture disc. This would cause a release of oxygen into the space, causing a fire hazard. (p. A-50)

Downloaded from http://www.everyspec.com

CAUTIONS

The following Cautions appear in the text of this manual and are given here for emphasis.

CAUTION

Components cleaned with Navy Oxygen Cleaner (NOC) shall be rinsed off prior to the NOC drying. Deposits resulting from the drying of NOC are very difficult to remove. (p. 4-4)

Verify that the valve internal parts are installed in the correct order and proper orientation. Failure to properly align parts will result in damage to the valve or leakage. (pp. 6-10, 6-12)

Verify that the valve stem is fully retracted into the bonnet prior to threading the bonnet onto the valve body. Failure to do so will cause excessive force to be applied to the valve disc, damaging the disc or bending the valve stem. (pp. 6-14, 6-16, 6-18)

For shipboard use, detach grounding cable from grounding rod and attach grounding cable to suitable shipboard ground to prevent shock hazard to personnel. (p. A-4)

The SNDLRCS van must be grounded to an earth ground. Ensure external earth ground system is connected to ground lug in power entry panel to prevent shock hazard to personnel. (p. A-4)

Downloaded from http://www.everyspec.com

CHAPTER 1

GENERAL INFORMATION AND SAFETY PRECAUTIONS

1-1 INTRODUCTION.

The Standard Navy Double-Lock Recompression Chamber System (SNDLRCS) is designed to provide recompression chamber support for the conduct of diving operations, including surface decompression of divers, treatment of divers for decompression sickness and arterial gas embolism, and hyperbaric oxygen treatment of non-diving related injuries.

1-1.1 PURPOSE. The purpose of this manual is to provide the information required for operating, maintaining, and repairing the SNDLRCS. This chapter provides a general description of SNDLRCS characteristics.

1-1.2 SCOPE. This manual provides the information required to mobilize, transport, set up, operate, and demobilize the SNDLRCS. The information in this manual is presented in the following chapters and appendices:

- Chapter 1 provides an overview and description of the equipment.
- Chapter 2 presents all procedures necessary to enable operating personnel to efficiently and effectively use the equipment in accomplishing its designated task.
- Chapter 3 presents a description of how the equipment functions.
- Chapter 4 contains scheduled maintenance instructions.
- Chapter 5 presents troubleshooting procedures.
- Chapter 6 provides corrective maintenance instructions.
- Chapter 7 provides illustrated parts breakdown lists and identification data on system components and repairable parts.
- Chapter 8 contains information on system installation, transportation, and storage.
- Appendix A presents SNDLRCS Operating Procedures (OPs).
- Appendix B presents SNDLRCS Emergency Procedures (EPs).
- Appendix C presents SNDLRCS Spare Parts lists.

1-2 GENERAL DESCRIPTION.

The SNDLRCS consists of a Standard Navy Double-Lock (SNDL) recompression chamber housed in an International Organization for Standards (ISO) container and an oxygen/air supply system designed to support training, surface decompression, and recompression treatment operations. An Air Supply Rack Assembly (ASRA) supplies high-pressure (HP) air to the system. Oxygen is supplied from four oxygen bottles that are mounted within the van and can also be supplied by other certified oxygen sources. The SNDLRCS is also capable of providing mixed gas to the chamber. The SNDLRCS has an Environmental Control System (ECS) that provides temperature and humidity control for the chamber.

Downloaded from http://www.everyspec.com

1-3 COMPONENT DESCRIPTION.

The SNDLRCS consists of the following major components:

- SNDLRCS Van
- SNDL Recompression Chamber and Control Panel
- Air System, consisting of Fly Away Dive System (FADS) III Air Supply Rack Assembly (ASRA) and HP Air Reducing Station
- Environmental Control System (ECS)
- Electrical System
- Oxygen System, consisting of Oxygen Reducing Station, oxygen flasks, and optional oxygen racks

1-3.1 SNDLRCS VAN. The SNDLRCS van (Figure 1-1) consists of a standard 20’ x 8’ x 8’ ISO shipping container. The van is outfitted with weather tight doors to permit personnel entry and the movement of equipment and components. The van is equipped with rollers, which allow the ASRA to be rolled out of the van. A hatch is provided for access to the chamber and quick diver insertion. The van is also outfitted with a fold-down desktop, a cabinet for storage, two air conditioning units, and a foldout vestibule.

Figure 1-1. SNDLRCS Van

Downloaded from http://www.everyspec.com

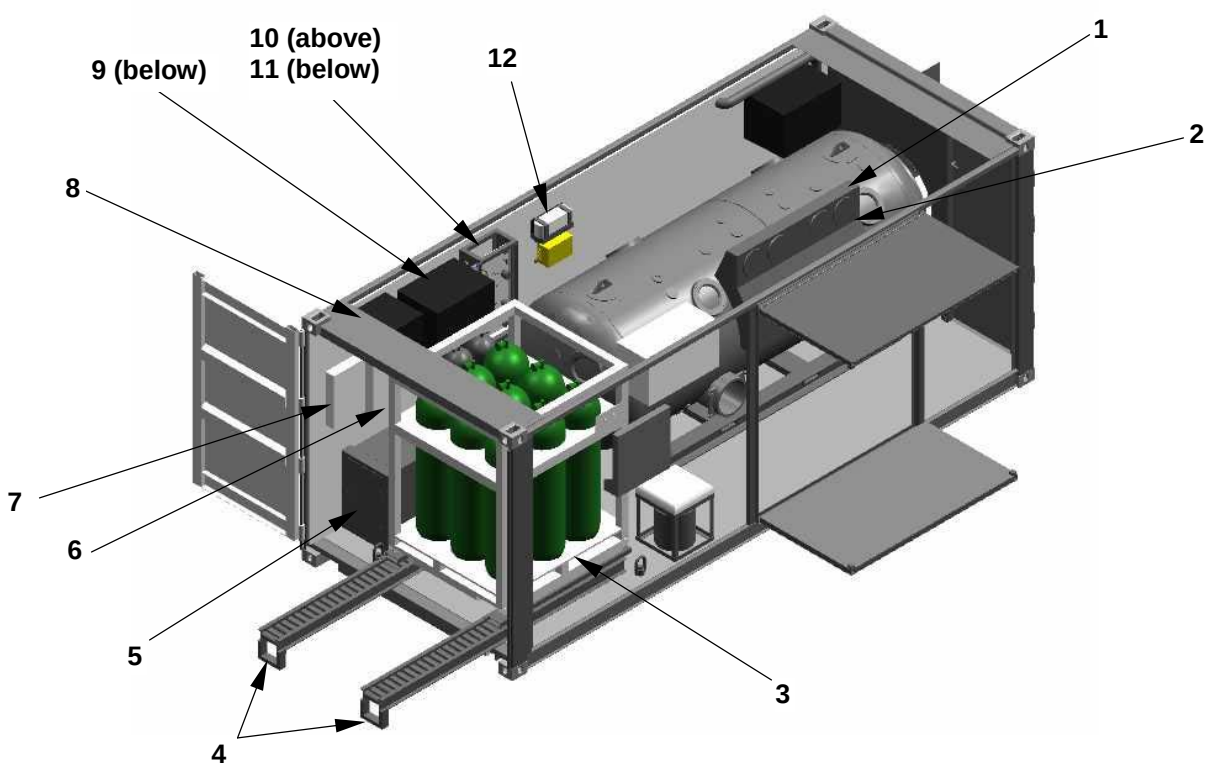

Figure 1-2. SNDLRCS Van Cutaway View

1-3.2 RECOMPRESSION CHAMBER. The SNDLRCS is outfitted with a Standard Navy Double-Lock recompression chamber (Figure 1-2, item 1) and all necessary recompression chamber piping and instrumentation.

1-3.2.1 Instrumentation. The SNDLRCS provides oxygen (O_2) and carbon dioxide (CO_2) analyzers, which are located on the Chamber Control Console (Figure 1-2, item 2). These analyzers display the content of oxygen and carbon dioxide inside the chamber. A temperature display, which also is mounted on the Chamber Control Console, shows the temperature in degrees Fahrenheit (°F) inside the inner lock.

1-3.3 AIR SYSTEM. The SNDLRCS air system consists of the Fly Away Dive System (FADS) III Air Supply Rack Assembly (ASRA) (Figure 1-2, item 3) that supplies up to 5000 psi air to an HP air reducing station (see item 10), and various valves, gauges, piping, and hoses. The system provides low-pressure (LP) compressed air for recompression chamber pressurization and venting. Rollers allow the ASRA to be removed from the van (Figure 1-2, item 4).

1-3.4 ENVIRONMENTAL CONTROL SYSTEM. The SNDLRCS has an Environmental Control System (ECS) that provides temperature and humidity control for the recompression chamber (Figure 1-2, item 5).

1-3.5 ELECTRICAL SYSTEM. The power distribution system within the SNDLRCS van is 120/208-volt, single phase, 60-hertz. The SNDLRCS van can accept 208-volt, single phase, 60-hertz power from shore facilities, or 440-volt, 3-phase, 60-hertz power from ship facilities, to supply the van's electrical system using the appropriate receptacle at the van's power receptacle box. If power from

Downloaded from http://www.everyspec.com

either shore or ship facilities is not available, a generator can provide 208-volt, single phase, 60-hertz power or 440-volt, 3-phase, 60-hertz power.

Selection of the external power source, 208-volt or 440-volt, is accomplished using a manual bus transfer (MBT) switch (Figure 1-2, item 6) to select the power feed to the power distribution panel (Figure 1-2, item 7). This panel is provided with a 50-amp main circuit breaker. The 440-volt supply is converted to 208 volts by a 15-kVA-isolation stepdown transformer (Figure 1-2, item 8). Either 120- or 208-volt power is available from the power distribution panel.

A 30-amp service is recommended for a 440-volt supply, and a 50-amp service is recommended for a 208-volt supply. Although a 10-kW generator can supply all electrical power requirements of the van, a 20-kW generator is recommended in order to support any additional external needs, such as lights, communications, etc., that are necessary in the vicinity of the van. For additional details on the electrical power and lighting system, as well as power supply connectors and cabling, see sections 2-4, 2-7.3, 3-2.3, and 3-2.13.4. Tools and materials required for installation are in section 8-4.

NOTE

Although 208 volts is the distribution voltage, labels and ratings indicating 220 volts or 240 volts refer to the 208-volt supply and distribution equipment.

1-3.5.1 Uninterruptible Power Supply. In the event of a temporary loss of power, the SNDLRCS van is equipped with an Uninterruptible Power Supply (UPS), which provides emergency power to the life support systems associated with the pressure vessel assembly (Figure 1-2, item 12).

1-3.6 OXYGEN SYSTEM. The SNDLRCS oxygen system provides low-pressure oxygen for patient/tender breathing**.** The oxygen system consists of four HP oxygen flasks, two for primary oxygen supply and two for secondary oxygen supply (Figure 1-2, item 9), an oxygen reducing station (Figure 1-2, item 11), and various valves, gauges, piping, and hoses. The SNDLRCS is capable of using T-bottles, K-bottles, and the following certified oxygen racks:

- Oxygen Supply Rack Assembly (OSRA)
- Helium-Oxygen Supply Rack Assembly (HOSRA)
- Transportable Recompression Chamber System (TRCS) Chamber Air and Oxygen Supply (CAOS)

1-4 CONFIGURATION OPTIONS.

The SNDLRCS is designed to be self-contained, but also can be used with other systems, including the Oxygen Supply Rack Assembly (OSRA), the Helium-Oxygen Supply Rack Assembly (HOSRA), the Transportable Recompression Chamber System (TRCS) Chamber Air and Oxygen Supply (CAOS), and 5000-psi air compressors. The various configurations are shown in Figure 1-3.

Downloaded from http://www.everyspec.com

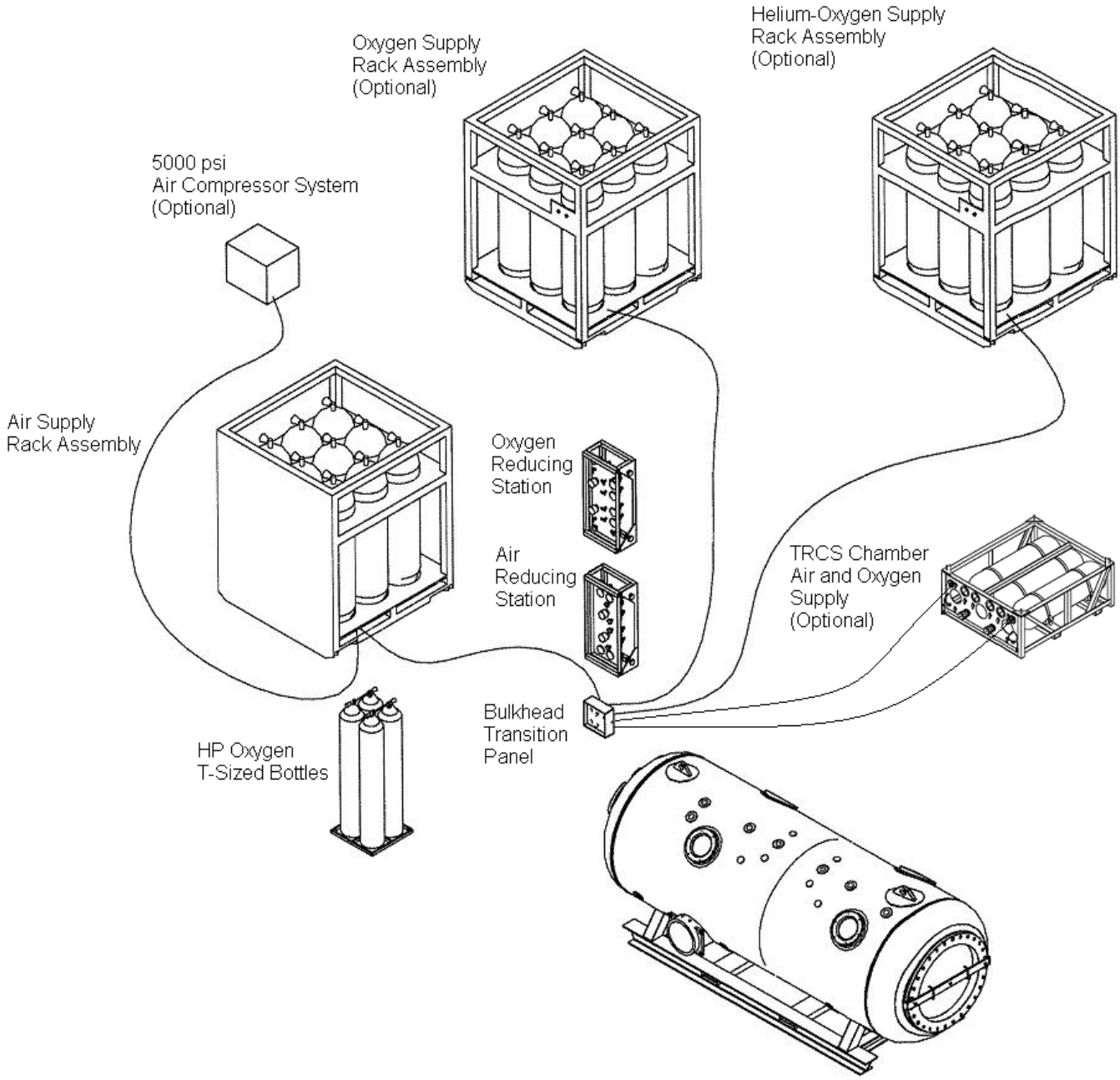

Figure 1-3. Configuration Options

Downloaded from http://www.everyspec.com

1-5 REFERENCE INFORMATION.

The following tables provide the SNDLRCS system specifications, along with lists of reference publications, equipment, accessories, and documents supplied, and document required, but not supplied.

Table 1-1. SNDLRCS System Specifications

Design Code	AS1210/ASME PVHO
Design Pressure	110 psig (247 fsw)
Design Temperature	0-125 °F
Dimensions: SNDLRCS Van: Length Height Width Recompression Chamber: Length Height Width	 20 feet 8 feet 8 feet 12.64 feet 5.63 feet 4.82 feet
Weight: Fully Loaded SNDLRCS Van Chamber ASRA w/full bottles	 22,000 lb 6,710 lb 3,000 lb
Capacity (floodable volume): Inner Lock Outer Lock	192 cf FV 123 cf FV 69 cf FV
Viewports	5 with 10” diameter clear opening
Medical Lock	1 foot. inside diameter x 1.58 feet long
Chamber Shell Material	Alloy ASTM A240 GR S31803 Stainless Steel (SS)
Life Support: CO_2 Scrubber	 Hytech Model 3.80.1018 CO_2 Scrubber Assembly Hytech Model 6000-2AS CO_2 Scrubber Assembly Hytech Model 5000-2AS CO_2 Scrubber Assembly
Built-In Breathing System (BIBS)	Pressur Vak II™ Breathing Masks, Scott Aviation 4 Masks – Chamber oxygen, air supply, mixed gas, and overboard exhaust
Atmosphere Monitoring: Oxygen (O_2) Analyzer Carbon Dioxide (CO_2) Analyzer O_2 Monitor	 Analox Mini O2 DII Analox CO_2 Buddy™ Lumidor Safety Products UniMAX-II
Gas Supply	Air: ASRA with 9000 scf Oxygen: 4 T-bottles with 902 scf
Communications	Amron Model 2820-4003 Chamber Communication System
Furnishings	Patient Stretcher, Attendant’s Seat, Fold-Down Table
Environmental Control System	Amron 9001 ECS/9100-ICS2
Van Electrical Power Input Receptacles	208-volt, 50-amp, 4-wire, 3-pole, locking 440-volt, 100-amp, 3-wire, 4-pole

Downloaded from http://www.everyspec.com

Table 1-2. Reference Publications for Additional Troubleshooting and Corrective Maintenance

Title	Number	Stock Number
Ships' Maintenance and Material Management (3M) Manual	OPNAVINST 4790.4	0579-LD-057-3100*
Container Inspection, Commercial and Military International Institute of Container Leasors-5 (IICL), Guide for Container Inspection, Section 4	MIL-HDBK-138B	NA
Standard Navy Double-Lock Recompression Chamber (SNDLRCS) Swimmer and Diver Support Facility	Maintenance Index Page (MIP) 5921/020-013	NA
Maintenance Manual Organizational Level for Lightweight Dive System (LWDS) Mk 3 Mod 0	SS500-HK-MMO-010	0910-LP-002-6890*
Transportable Recompression Chamber System Mk 6, Mod 0 and Mod 1 Technical Manual	SS500-AW-MMM-010	0910-LP-100-5601*
Approved for Navy Use (ANU) List	http://www.supsalv.org	NA

Table 1-3. Equipment, Accessories, and Documents Supplied

Title	Number	Stock Number
Analox Mini O2 DII Oxygen Analyzer	Instruction Manual	NA
Analox CO_2 Buddy™ Carbon Dioxide Analyzer	Instruction Manual	NA
Lumidor Safety Products UniMAX-II O_2 Monitor	Instruction Manual	NA
Amron Chamber Communications System	Instruction Manual	NA
Amron Environmental Control System	Instruction Manual	NA
APC Corp. Back UPS Pro 280/420/650 User's Manual	Instruction Manual	NA
APC Corp. Back UPS BR800 BLK	User's Manual	NA

Table 1-4. Documents Required, But Not Supplied

Title	TMINS Number	Stock Number
Naval Sea Systems Command (NAVSEA) Drawing Package	592-7317710	NA
U.S. Navy Diving Manual	SS521-AG-PRO-010	0910-LP-708-8000*
U.S. Navy Diving and Hyperbaric Systems Safety Certification Manual	SS521-AA-MAN-010	0910-LP-312-4600*
Fly Away Dive System (FADS) III Air System Technical Manual	S9592-B1-MMO-010	0910-LP-730-1600*
Operation and Maintenance Manual for the Emergency Evacuation Hyperbaric Stretcher (EEHS)	SH700-A2-MMC-010	0910-LP-101-0104*

* Stock numbers change with each revision. Should these publications get updated before this manual, new stock numbers will supplant the numbers shown here. The TMINS number will remain the same.

Downloaded from http://www.everyspec.com

THIS PAGE INTENTIONALLY LEFT BLANK

Downloaded from http://www.everyspec.com

CHAPTER 2

OPERATION

2-1 INTRODUCTION.

This chapter provides general information about the operation of the SNDLRCS van and the equipment that it contains. This information is intended to supplement the Operating Procedures (OPs) and Emergency Procedures (EPs) listed in Appendixes A and B, respectively.

2-1.1 PURPOSE. The purpose of this chapter is to provide operational guidance for the Standard Navy Double-Lock Recompression Chamber System (SNDLRCS). The instructions in this chapter do not cover surface decompression or diving accident treatment procedures. The *U.S. Navy Diving Manual* shall be used for conducting specific surface decompression and treatment tables when using the SNDLRCS.

2-1.2 SCOPE. This chapter provides guidance on the operation of the various subsystems of the SNDLRCS. The guidance contained in this chapter augments the approved standardized system OPs and EPs contained in Appendixes A and B.

2-1.3 MANNING REQUIREMENTS. In conducting recompression chamber operations, all attending personnel must work as a team for the benefit of the occupants. The *U.S. Navy Diving Manual* provides the minimum manning level for conduct of recompression chamber operations.

2-1.4 SAFETY REQUIREMENTS. Prior to operating the SNDLRCS, personnel shall review and become thoroughly familiar with the general precautions listed in the Safety Summary. Operating procedures and their specific Dangers, Warnings, and Cautions shall be read in full before operating the SNDLRCS.

2-2 OPERATING PROCEDURES.

Upon completion of installation (see Chapter 8), conduct SNDLRCS standard operations in accordance with the following OPs, which can be found in Appendix A:

OPs	Description
OP-1	SNDLRCS Setup
OP-2	Medical Lock Operation
OP-3	SNDLRCS Modified Shutdown
OP-4	SNDLRCS Modified Startup
OP-5	SNDLRCS Shutdown for Shipment / Layup
OP-6	Air Supply Rack Assembly (ASRA) Charging Procedures
OP-7	Procedures for Charging Air Supply Rack Assembly (ASRA) During Operation
OP-8	Scuba Bottle Charging Procedures
OP-9	Oxygen Bottle In-place Charging Procedures

Downloaded from http://www.everyspec.com

2-3 EMERGENCY PROCEDURES.

Conduct SNDLRCS emergency operations in accordance with the following EPs, which can be found in Appendix B:

EPs	Description
EP-1	Rapid Loss of Chamber Pressure
EP-2	Increase in Chamber Pressure
EP-3	Contaminated Atmosphere
EP-4	Fire in Chamber
EP-5	Loss of Oxygen
EP-6	Loss of Primary Air Supply
EP-7	Loss of Primary Power

2-4 ELECTRICAL SUPPLY AND CONTROL.

The SNDLRCS van is wired for 208-volt, single phase, 60-hertz, or 440-volt, 3-phase, 60-hertz electrical power input. See section 2-7.3 for information pertaining to the use of generators.

2-4.1 MANUAL BUS TRANSFER (MBT) SWITCH.

DANGER

Set the manual bus transfer (MBT) switch to the OFF position before connecting or disconnecting ANY electrical power supply cables from the power receptacle box. Failure to do so could cause death to personnel and damage to the equipment in the SNDLRCS van.

NOTE

Although 208 volts is the distribution voltage, labels and ratings indicating 220 volts or 240 volts refer to the 208-volt supply and distribution equipment.

Mounted on the interior bulkhead of the van, the manual bus transfer (MBT) switch (see Figure 2-1) and transformer selects either 208- or 440-volt input power for distribution to the electrical breaker panel. If 440-volt power is selected on the MBT, the transformer converts the power to 208 volts before routing it to the power distribution panel. Therefore, the output power to the power distribution panel is 208-volt, single phase, 60-hertz, regardless of the input source.

Downloaded from http://www.everyspec.com

Figure 2-1. Power Distribution Panel (left) and Manual Bus Transfer (MBT) Switch

2-4.2 ELECTRICAL POWER CONNECTIONS. The incoming power connections (see Figure 2-2) are mounted on the outer wall of the SNDLRCS van and are equipped to accept either 208- or 440-volt electrical power. Connect the appropriate power cable for the selected power source and voltage to the corresponding receptacle in the power receptacle box (see section 8-5).

DANGER

Failure to properly ground the SNDLRCS van may result in injury or death to personnel.

The SNDLRCS van should be properly grounded during van installation and rigging. See section 8-8 for information about grounding the SNDLRCS van.

Figure 2-2. Power Receptacle Box

Downloaded from http://www.everyspec.com

2-4.2.1 208-Volt Power Connection. The 208-volt, single phase, ac connection is a Marinco 3-pole, 50-amp connector and is mounted on the power input receptacle box of the SNDLRCS van.

2-4.2.2 440-Volt Power Connection. The 440-volt, 3-phase, ac connection is a 4-pole, 100-amp connector mounted on the power input receptacle box of the SNDLRCS van.

2-4.2.3 Input Voltage Selection. After establishing the electrical power connection, set the MBT switch to the ON position for the input voltage. If using 3-phase 440-volt power, the stepdown transformer converts the input power to the distribution panel voltage (208 volts).

2-4.3 POWER DISTRIBUTION PANEL. Breakers are contained in the power distribution panel (see Figure 2-3) to control power input to the components within the SNDLRCS van. Breakers are clearly marked as to their ON/OFF positions. Breakers trip to OFF when overloaded or a fault occurs. Both 120- and 208-volt power are available from the power distribution panel.

2-4.3.1 Ground-Fault Interrupter (GFI) Breakers. Breakers that have a white reset button are ground-fault interrupter (GFI) breakers. When the power to the components that are controlled by these breakers exceeds a safe level, or if a ground-fault exists, the breaker trips and must be reset to restore power to the component.

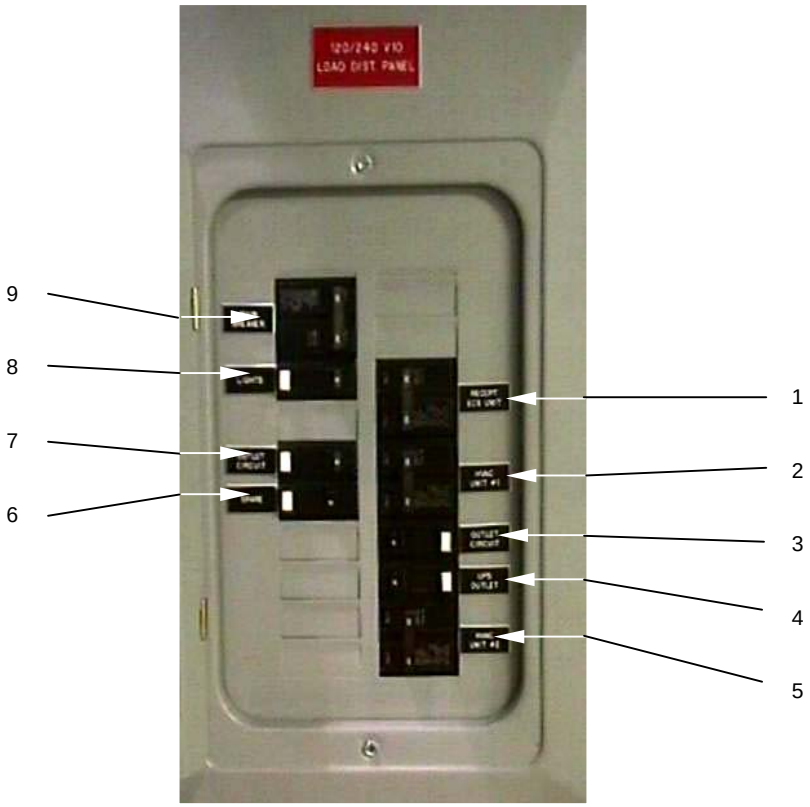

Figure 2-3. Power Distribution Panel (open)

2-4.3.2 Environmental Control System (ECS) Supply Breaker. Figure 2-3, item 1 is a 20-amp, 220-volt breaker that supplies power to the ECS heat pump unit.

Downloaded from http://www.everyspec.com

2-4.3.3 Forward Heat and Ventilation Air Conditioning Breaker. Figure 2-3, item 2 is a 20-amp, 220-volt breaker that supplies power to the forward air conditioning/heating unit.

2-4.3.4 Outlet Breaker #1. Figure 2-3, item 3 is a 15-amp, 110-volt, ground-fault interrupter (GFI-) protected breaker that supplies power to outlets within the SNDLRCS van.

2-4.3.5 Uninterruptible Power Supply (UPS) Breaker. Figure 2-3, item 4 is a 15-amp, 110-volt, GFI-protected breaker that supplies power to the UPS system and 24-volt dc transformer.

2-4.3.6 After Heat and Ventilation Air Conditioning Breaker. Figure 2-3, item 5 is a 20-amp, 220-volt breaker that supplies power to the after air conditioning/heating unit.

2-4.3.7 Spare Breaker. Figure 2-3, item 6 is a 15-amp, 110-volt, GFI-protected breaker. This breaker is an installed spare for future electrical system growth.

2-4.3.8 Outlet Breaker #2. Figure 2-3, item 7 is a 15-amp, 110-volt, GFI-protected breaker that supplies power to outlets within the SNDLRCS van.

2-4.3.9 Lighting Breaker. Figure 2-3, item 8 is a 15-amp, 110-volt, GFI-protected breaker that supplies power to lighting throughout the SNDLRCS van.

2-4.3.10 Master Breaker. Figure 2-3, item 9 is a 50-amp, 220-volt breaker that is the master input breaker to the power distribution panel.

2-4.4 UNINTERRUPTIBLE POWER SUPPLY (UPS) AND TRANSFORMER. The UPS (see Figure 2-4) is mounted on the outboard wall of the van, over the HP Air Reducing Station. The UPS is fed electrical power from a dedicated breaker and supplies power to the 24-volt dc transformer and critical 24-volt dc power components on the recompression chamber. The UPS is designed to provide adequate power to safely operate the chamber in the event of a loss of electrical power.

NOTE

The light fixture over the Chamber Control Console is powered from the Uninterruptible Power Supply.

Located below the UPS, the 24-volt transformer provides electrical power to internal components (fans, instrumentation, and communication) within the recompression chamber.

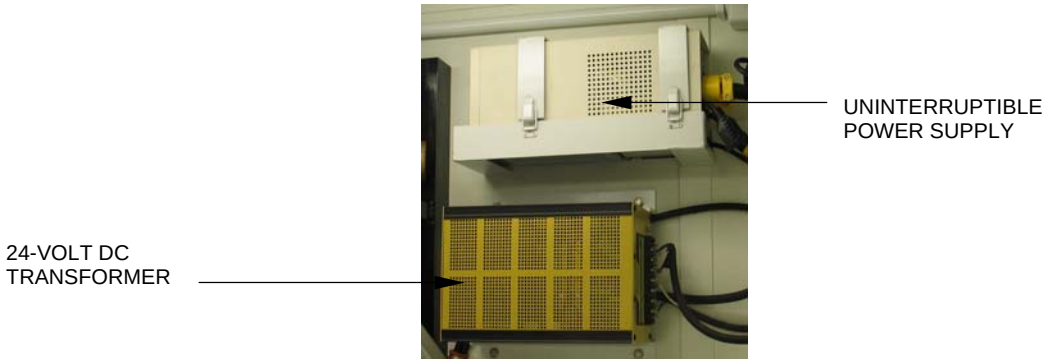

Figure 2-4. Uninterruptible Power Supply and 24-Volt Transformer

Downloaded from http://www.everyspec.com

2-5 CONTROLS AND INDICATORS.

To allow safe operation of the SNDLRCS in accordance with the *U.S. Navy Diving Manual*, SS521-AG-PRO-010, the controls and indicators are mounted to require minimal movements by the operator and to provide maximum visibility of the controls as well as the chamber occupants. The following tables and figures show the locations and normal operating positions of the operator's console controls and indicators.

2-5.1 SNDLRCS CONTROL CONSOLE. Installed on the front of the recompression chamber, the SNDLRCS Control Console (see Figure 2-5) is the primary control and monitoring station for the safe operation and administration of the medical treatment for the personnel involved in diving accidents, controlled decompression, maintenance of diver saturation conditions, or other treatment where hyperbaric conditions are indicated. The following controls and indicators are found at the SNDLRCS control console.

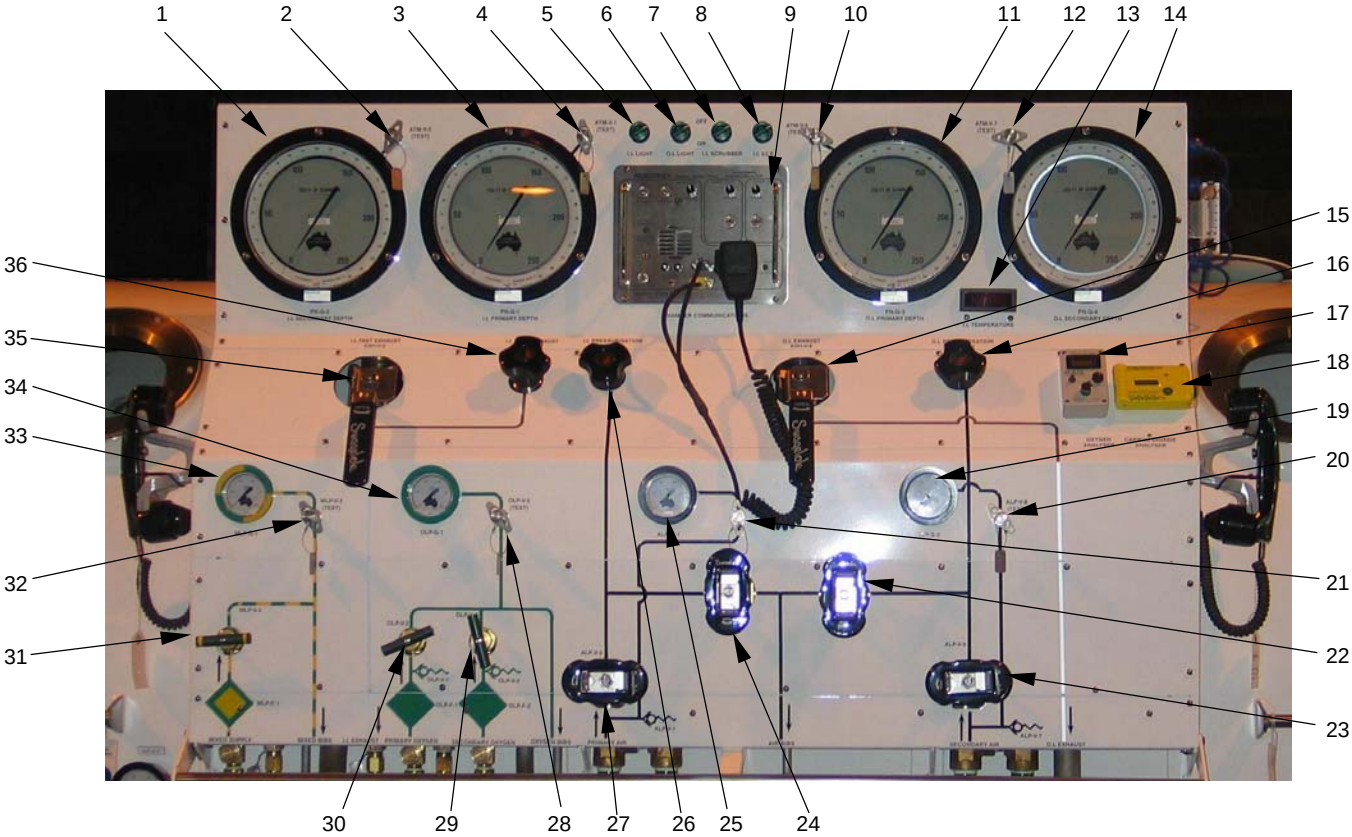

Figure 2-5. Chamber Control Console

Table 2-1 shows the functions and normal operating conditions of the Chamber Control Console components identified in Figure 2-5.

Downloaded from http://www.everyspec.com

Table 2-1. Chamber Control Console Components

Figure Index No.	Panel Label	Component Description	Normal Operating Condition
1	PN-G-2	Inner Lock (IL) Secondary Depth Gauge	Variable
2	ATM-V-3	IL Secondary Depth Gauge Valve	Open
3	PN-G-1	IL Primary Depth Gauge	Variable
4	ATM-V-1	IL Primary Depth Gauge Valve	Open
5	IL LIGHT	IL Light Switch	On
6	OL LIGHT	Outer Lock (OL) Light Switch	On
7	IL SCRUBBER	IL CO_2 Scrubber Switch	On
8	IL ECS	IL Environmental Control System (ECS) Switch	On
9	CHAMBER COMMS	Communication Control Panel	On
10	ATM-V-5	OL Primary Depth Gauge Valve	Open
11	PN-G-3	OL Primary Depth Gauge	Variable
12	ATM-V-7	OL Secondary Depth Gauge Valve	Open
13	IL TEMP	IL Temperature LCD Display	Variable
14	PN-G-4	OL Secondary Depth Gauge	Variable
15	EXH-V-8	OL Fast Exhaust Valve	Closed
16	ALP-V-13	OL LP Air Pressurization Valve	Open when outer lock pressurized
17	NA	O_2 Analyzer	Variable
18	NA	CO_2 Analyzer	Variable
19	ALP-G-2	Secondary LP Air Supply Gauge	Variable, same as the high-pressure (HP)/low-pressure (LP) reducer outlet
20	ALP-V-8	Secondary LP Air Supply Gauge Valve	Open

Downloaded from http://www.everyspec.com

Table 2-1. Chamber Control Console Components (contd)

Figure Index No.	Panel Label	Component Description	Normal Operating Condition
21	ALP-V-2	Primary LP Air Supply Gauge Valve	Open
22	ALP-V-10	Secondary LP Air Cross Connect Valve	Open
23	ALP-V-9	Secondary LP Air Shutoff Valve	Closed unless Built-In Breathing System (BIBS) air is required
24	ALP-V-4	Primary LP Air Cross Connect Valve	Open
25	ALP-G-1	Primary LP Air Supply Gauge	Variable, same as the HP/LP reducer outlet
26	ALP-V-5	IL LP Air Pressurization Valve	Open
27	ALP-V-3	Primary LP Air Shutoff Valve	Open
28	OLP-V-5	LP O_2 Supply Gauge Valve	Open
29	OLP-V-4	Secondary LP O_2 Supply Valve	Closed unless BIBS O_2 is required
30	OLP-V-2	Primary LP O_2 Supply Valve	Open if BIBS O_2 is required
31	MLP-V-2	LP Mixed Gas Shutoff Valve	Open if BIBS mixed gas required
32	MLP-V-3	LP Mixed Gas Pressure Gauge Valve	Open if BIBS mixed gas required
33	MLP-G-1	LP Mixed Gas Pressure Gauge	Variable
34	OLP-G-1	LP O_2 Supply Gauge	Variable
35	EXH-V-5	IL Fast Exhaust Valve	Closed
36	EXH-V-6	IL Slow Exhaust Valve	Closed

2-5.2 HP AIR REDUCING STATION. The HP Air Reducing Station (see Figure 2-6) is located on the bulkhead of the shipping van. The HP Air Reducing Station, through installed piping, hoses, valves, and reducers, lowers the pressure from the Fly Away Dive System (FADS) III air storage bank, or external air source such as a supply compressor at 5000 psi to 250 psi for use in the SNDLRCS. The following controls and indicators are found at the HP Air Reducing Station.

Downloaded from http://www.everyspec.com

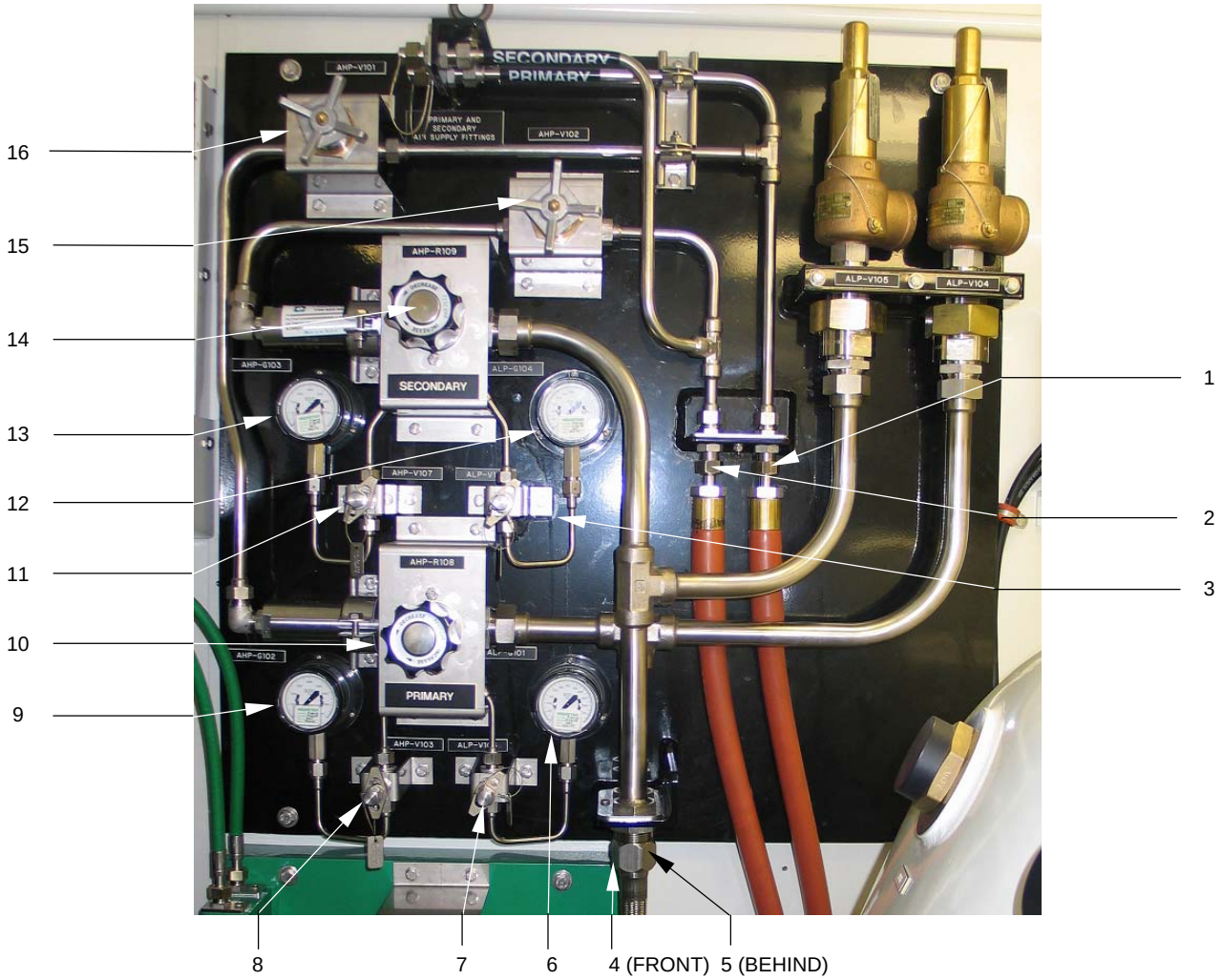

Figure 2-6. HP Air Reducing Station

Table 2-2 defines the functions and normal operating conditions of the HP Air Reducing Station components identified in Figure 2-6.

Table 2-2. HP Air Reducing Station Components

Figure Index No.	Panel Label	Component Description	Normal Operating Condition
1	NA	Primary HP Air Supply from ASRA	Connected to air supply via air hose
2	NA	Secondary HP Air Supply from ASRA	Connected to air supply via air hose
3	ALP-V-110	Secondary LP Air Gauge Isolation Valve	Open
4	NA	Secondary LP Air Supply to Chamber	Connected to chamber via air hose

Downloaded from http://www.everyspec.com

Table 2-2. HP Air Reducing Station Components (contd)

Figure Index No.	Panel Label	Component Description	Normal Operating Condition
5	NA	Primary LP Air Supply to Chamber	Connected to chamber via air hose
6	ALP-G-101	Primary LP Air Supply Gauge	250 psig
7	ALP-V-106	Primary LP Air Gauge Isolation Valve	Open
8	AHP-V-103	Primary HP Air Gauge Isolation Valve	Open
9	AHP-G-102	Primary HP Air Supply Gauge	Variable
10	AHP-R-108	Primary HP Air Regulator	Load to 250 psig.
11	AHP-V-107	Secondary HP Air Gauge Isolation Valve	Open
12	ALP-G-104	Secondary LP Air Supply Gauge	250 psig
13	AHP-G-103	Secondary HP Air Supply Gauge	Variable
14	AHP-R-109	Secondary HP Air Regulator	Load to 250 psig.
15	AHP-V-102	Secondary HP Air Supply Valve	Open
16	AHP-V-101	Primary HP Air Supply Valve	Open

2-5.3 OXYGEN (O_2) REDUCING STATION. The Oxygen Reducing Station (see Figure 2-7) is located on the bulkhead of the shipping van below the HP Air Reducing Station. The Oxygen Reducing Station, through installed piping, hoses, valves, and reducers, lowers the pressure from the four onboard oxygen cylinders, or other certified oxygen racks listed in section 1-3.1.6, to between 75 and 100 psi for use in the BIBS. An O_2 monitor mounted above the onboard O_2 cylinders (see Figure 7-2) sounds an alarm if the O_2 level in the SNDLRCS van exceeds recommended levels.

Table 2-3 shows the functions and normal operating conditions for the Oxygen Reducing Station components identified in Figure 2-7.

Table 2-3. Oxygen (O_2) Reducing Station Components

Figure Index No.	Panel Label	Component Description	Normal Operating Condition
1	OHP-R-205	Secondary HP O_2 Regulator	Load to 75-100 psig.
2	OLP-G-203	Secondary LP O_2 Supply Gauge	Variable
3	OLP-V-207	Secondary LP O_2 Gauge Isolation Valve	Open
4	OHP-R-206	Primary HP O_2 Regulator	Load to 75-100 psig.
5	OLP-G-204	Primary LP O_2 Supply Gauge	Variable

Downloaded from http://www.everyspec.com

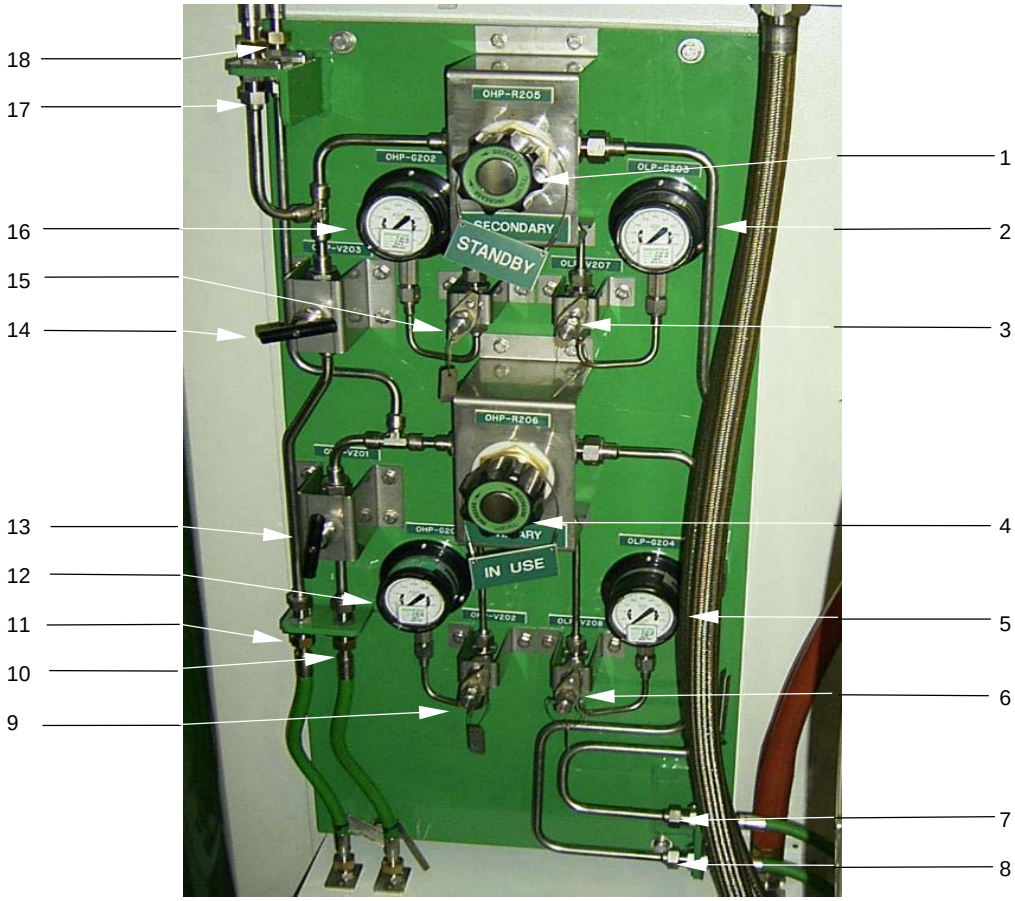

Figure 2-7. Oxygen Reducing Station

Table 2-3. Oxygen (O_2) Reducing Station Components (contd)

Figure Index No.	Panel Label	Component Description	Normal Operating Condition
6	OLP-V-208	Primary LP O_2 Gauge Isolation Valve	Open
7	NA	Secondary LP O_2 Supply to Chamber	Connected to Chamber via oxygen hose
8	NA	Primary LP O_2 Supply to Chamber	Connected to Chamber via oxygen hose
9	OHP-V-202	Primary HP O_2 Gauge Isolation Valve	Open
10	NA	Primary HP O_2 Supply from OSRA, CAOS, or other outside source	Connected to Bulkhead Transition Panel via oxygen hose

Downloaded from http://www.everyspec.com

Table 2-3. Oxygen (O_2) Reducing Station Components (contd)

Figure Index No.	Panel Label	Component Description	Normal Operating Condition
11	NA	Secondary HP O_2 Supply from OSRA, CAOS, or other outside source	Connected to Bulkhead Transition Panel via oxygen hose
12	OHP-G-201	Primary HP O_2 Supply Gauge	Variable
13	OHP-V-201	Primary HP O_2 External Supply Shutoff Valve	Closed unless using OSRA, HOSRA, CAOS, K-Bottles, or other external certified source
14	OHP-V-203	Secondary HP O_2 External Supply Shutoff Valve	Closed unless using OSRA, HOSRA, CAOS, K-Bottles, or other external certified source
15	OHP-V-204	Secondary HP O_2 Gauge Isolation Valve	Open
16	OHP-G-202	Secondary HP O_2 Supply Gauge	Variable
17	NA	Secondary HP O_2 Supply from T-Bottles inside van	Connected to bottle valves via oxygen hose
18	NA	Primary HP O_2 Supply from T-Bottles inside van	Connected to bottle valves via oxygen hose

2-5.4 EXTERNAL COMPRESSED GAS SUPPLY CONNECTIONS. On the outer wall of the SNDLRCS van, connections (see Figure 2-8) are provided for primary and secondary oxygen supply, mixed gas breathable air supply, and primary and secondary high-pressure (HP) air supply. On the opposite side of the wall, inside the van, is a bulkhead transition panel that, via flexible HP hoses, connects HP air, oxygen and/or LP mixed gas to their appropriate systems. These connections are put into service by connecting an external, flexible HP hose(s) from the gas system (HP air, oxygen, or LP mixed gas) connection to its pressure source. Note that mixed gas is reduced to low pressure on the HOSRA panel before it enters the SNDLRCS van, while air and oxygen are reduced to low pressure at their respective reducing stations inside the van. On units procured after 2007, an air-charging panel is installed in the rear door of the SNDLRCS van.

Figure 2-8. External Compressed Gas Supply Connections

Downloaded from http://www.everyspec.com

2-5.5 COMMUNICATION SYSTEM. Installed on the Recompression Chamber Control Console and within the chamber inner and outer locks are amplified communication stations. Also installed are sound powered phones to allow communication in the event of a loss of power.

2-5.5.1 Control Console Communications Panel. Located on the upper center section of the Recompression Chamber Control Console, the communications panel (see Figure 2-9) is the primary means of communication with the personnel within the chamber. The communications panel has two independently operated circuits, one for each chamber of the recompression chamber. A backup sound-powered phone is provided to communicate with personnel in the inner and outer locks. During power outages, the UPS powers the communications panel.

Figure 2-9. Control Console Communications Panel

2-5.5.2 Interior Communications Panel. Within each lock is an interior communications panel (see Figure 2-10). This allows personnel within the recompression chamber to communicate with the operator at the Recompression Chamber Control Console. Each station has a backup sound-powered phone to allow communications in the event of a loss of power. The communication panels are powered from the 24-volt UPS.

Figure 2-10. Interior Communications Panel

Downloaded from http://www.everyspec.com

2-5.6 AIR SAMPLING EQUIPMENT AND CONNECTIONS. The air quality within the recompression chamber and in the BIBS piping is monitored by air sampling equipment. This air to be sampled is piped from the chamber to a series of quick disconnect fittings located at the forward end of the Recompression Chamber Control Console. From the quick disconnects, a short piece of removable hose is installed to connect the gas source to a flowmeter and the sampled gas is then routed to the oxygen and carbon dioxide analyzers. In addition, a cylinder containing gas of a known sample concentration is included, which, when aligned to the monitors, is used to calibrate the sensors.

2-5.6.1 Air Sampling Manifold and Flowmeter. Located on the side of the Recompression Chamber Control Console are sampling connections for the oxygen BIBS header, the mixed gas BIBS header, the inner lock atmosphere, and the outer lock atmosphere (see Figure 2-11). These connections are quick disconnect fittings that are piped, via the sample hose, from gauge lines and cutout valves to the appropriate systems to allow representative samples of the air quality during operation of the recompression chamber. The flowmeter controls the gas flow rate to the sensors to ensure their proper operation.

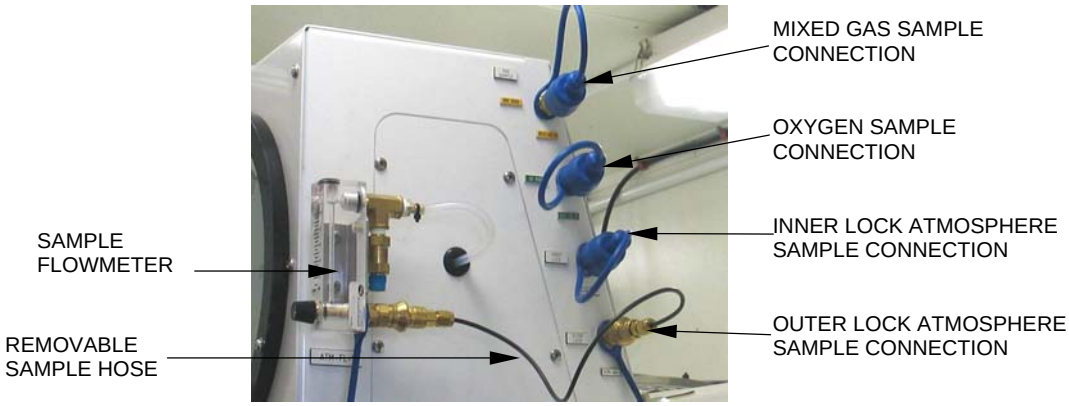

Figure 2-11. Air Sampling Manifold and Flowmeter

2-5.6.2 Air Sample Monitors. Mounted on the front of the Recompression Chamber Control Console, the oxygen and carbon dioxide sample monitors (see Figure 2-12) give visual readings of the concentration of the sampled gas and an audible alarm when the gas sample is outside safe operating limits (see sections 3-2.8 and 3-2.9).

The air sample monitors are operated in accordance with their respective user's guides and the operating instructions in Appendix A.

Figure 2-12. Air Sample Monitors

Downloaded from http://www.everyspec.com

2-5.6.3 Calibration Sample Gas Cylinder. Mounted over the personnel access door, the calibration sample gas cylinder (see Figure 2-13) contains gas of known concentration of oxygen and carbon dioxide. An installed reducer and plastic tubing lowers the pressure of the stored gas and pipes the sample gas to the flowmeter. The sample gas is used to calibrate the monitors.

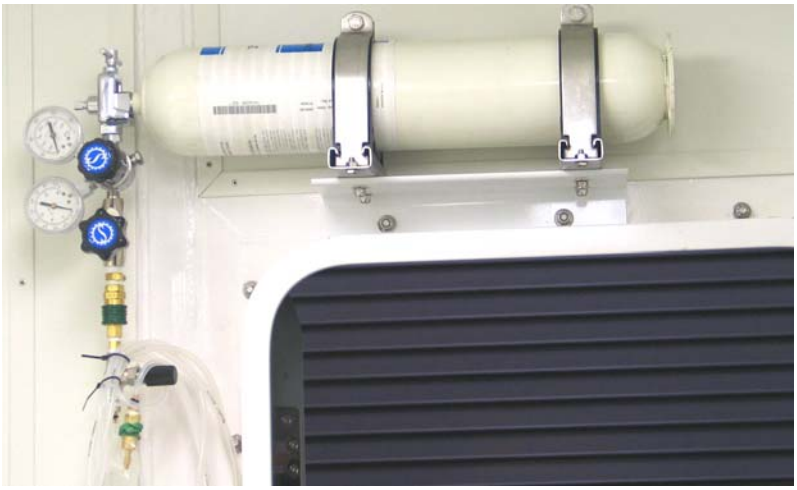

Figure 2-13. Calibration Sample Gas Cylinder

2-5.7 ENVIRONMENTAL CONTROL SYSTEM (ECS). The ECS consists of two major components. Located at the sill of the cargo access door, the ECS compressor and heat exchanger cools or heats the heat transfer medium. Located within the inner lock (under the personnel stretcher), the ECS heat exchanger cools or heats the ambient air within the inner lock.

2-5.7.1 Environmental Control System Compressor. Located at the aft end of the SNDLRCS van, the compressor unit (see Figure 2-14) contains an R 134 refrigerant compressor, an air to refrigerant heat exchanger, a refrigerant to water heat exchanger, controls, and coolant mix circulating pump. The unit is powered by 208/220-volt, single phase, ac power. During operation, the unit either heats or cools the coolant (a mixture of 50% propylene glycol and 50% water), which is circulated into the recompression chamber to the ECS inner lock heat exchanger. Isolation valves, located at the hull of the chamber, control the flow into the chamber and a flowmeter gives visual indication of the coolant flow in the system.

Figure 2-14. Environmental Control System (ECS) Compressor

Downloaded from http://www.everyspec.com

2-5.7.2 Environmental Control System Heat Exchanger. Located within the chamber, under the patient stretcher, the ECS heat exchanger (see Figure 2-15) uses a 24-volt dc fan controlled from the Chamber Control Console to heat or cool the inner lock. During operation, the fan passes air through the heat exchanger and energy is transferred from the coolant into the surrounding air to control the temperature within the inner lock.

Figure 2-15. Environmental Control System (ECS) Heat Exchanger

2-5.8 BUILT-IN BREATHING SYSTEM (BIBS). The Built-In Breathing System (BIBS) consists of piping, control valves, supply manifolds, exhaust manifolds, and pressure regulators to provide safe breathable air, oxygen, or mixed gas, as required, to support the tenders inside the chamber and the chamber patient(s). Either onboard storage banks or auxiliary banks from outside the SNDLRCS van may supply the oxygen and compressed air. Mixed gas is supplied only from an external source.

2-5.8.1 BIBS Manifolds. Located within the inner and outer locks, the BIBS manifolds (see Figure 2-16) provide oxygen, breathable air, and mixed gas supply and an exhaust path for up to four personnel in each chamber of the SNDLRCS. The breathable air manifolds have a first stage regulator attached to control the air pressure to the BIBS mask. The oxygen and mixed gas manifolds pressure is controlled externally from the recompression chamber by the operator at the Recompression Chamber Control Console. Exhaust pressure regulation is controlled by back pressure regulators (one for each lock) to provide a safe pressure for the outlet of the exhalations from each BIBS mask.

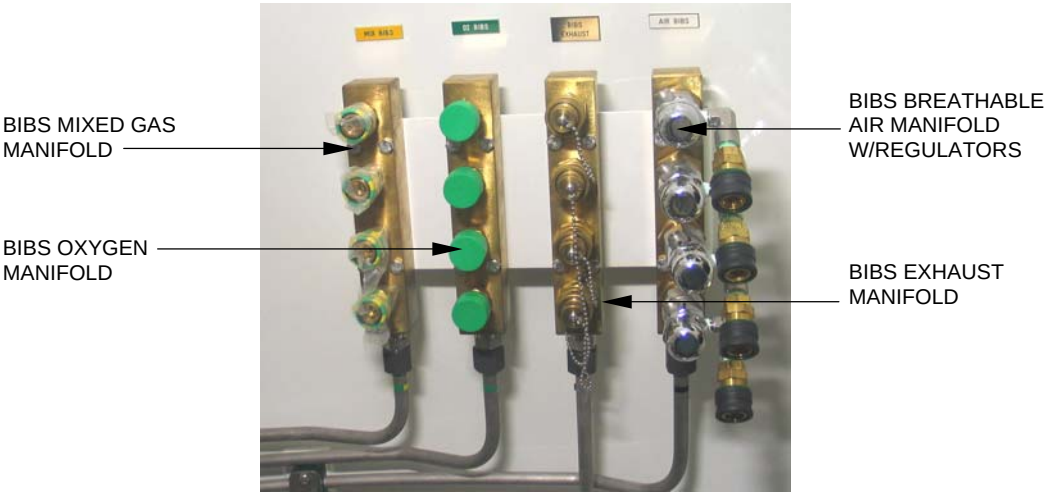

Figure 2-16. BIBS Manifolds (Inner Lock)

Downloaded from http://www.everyspec.com

2-5.8.2 BIBS Exhaust Back Pressure Regulator.

WARNING

Do not operate BIBS Exhaust Back Pressure Regulator (BPR) Bypass Valve (EXH-V-1 or EXH-V-3) deeper than 60 fsw. If BIBS Exhaust BPR fails at depths greater than 60 fsw, disconnect BIBS Mask Exhaust hose from BIBS Exhaust Manifold and exhaust to chamber atmosphere. Operation at depths greater than 60 fsw can cause pressure fluctuations at the diver's BIBS mask and place the diver at risk of high differential pressure, causing embolisms.

Two units, located under the end of each lock, control the pressure at which the BIBS exhaust manifold is maintained. These units are the IL BIBS Exhaust BPR (see Figure 2-17) and the OL BIBS Exhaust BPR. The manifold operates by sensing ambient pressure in the recompression chamber inner or outer lock (as installed) through a gauge sensing line and cutout valve. The regulator is preset by adjusting the spring tension at the top of the regulator body. As pressure within the lock changes, the pressure sensed at the diaphragm of the regulator controls the internal valve setting, which in turn controls the back pressure in the BIBS exhaust manifold. The regulator has an external bypass line that allows the operator to manually control the BIBS exhaust back pressure. The exhaust gases are vented out of the SNDLRCS van through the exhaust gas vent system.

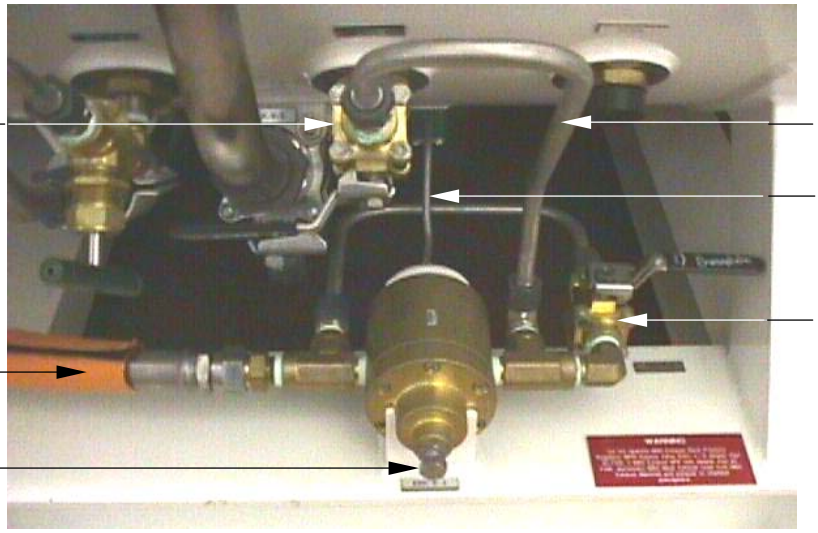

Figure 2-17. BIBS Exhaust Back Pressure Regulator (BPR)

2-5.9 CARBON DIOXIDE (CO_2) SCRUBBER.

WARNINGS

Carbon dioxide absorbent material will form alkali compounds when mixed with water. These compounds can irritate the eyes, throat, mucus membranes, and skin. Take appropriate precautions to avoid breathing absorbent material or getting it into eyes or on skin. Do not stand downwind of canister while filling. If not strictly observed, injury to personnel could result.

Downloaded from http://www.everyspec.com

Thoroughly settle the bed of carbon dioxide absorbent granules. If improperly filled, channels which permit gas to bypass the absorbent material may form, causing elevated levels of carbon dioxide in the breathing loop. Do not overfill the scrubber canister. If not strictly observed, injury to personnel could result.

Do not use the last one-inch of carbon dioxide absorbent material in the storage container because dust accumulates at the bottom. If not strictly observed, injury to personnel could result.

Located in the inner lock, the carbon dioxide scrubber (see Figure 2-18) uses a 24-volt dc fan to pass air through a chemical bed. Moisture and carbon dioxide in the air react with the chemicals in the bed, such as sodalime and Sodasorb, to remove the carbon dioxide from the ambient air within the chamber. The operator at the Chamber Control Console controls the fan.

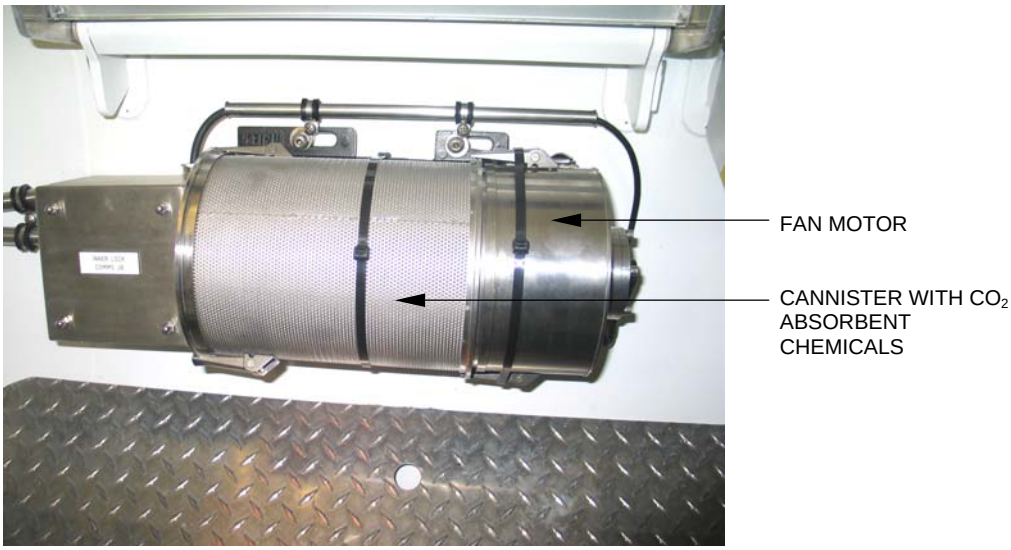

Figure 2-18. Carbon Dioxide (CO_2) Scrubber

2-6 SAFETY COMPONENTS AND SETPOINTS.

Table 2-4 shows the installed safety devices and setpoints for the SNDLRCS.

Table 2-4. Installed Safety Components and Setpoints

Safety Device	Location	Setpoint (psig)	Protective Function
ALP-V-1 Relief valve	Chamber Control Console	300	Protects chambers IL from over-pressurization.
ALP-V-7 Relief valve	Chamber Control Console	300	Protects chamber's OL from over-pressurization.
ALP-V-104 Relief valve	HP Air Reducing Station	300	Protects LP primary air piping from over-pressurization.

Downloaded from http://www.everyspec.com

Table 2-4. Installed Safety Components and Setpoints (contd)

Safety Device	Location	Setpoint (psig)	Protective Function
ALP-V-105 Relief valve	HP Air Reducing Station	300	Protects LP secondary air piping from over-pressurization.
ATM-V-10 Relief valve	Chamber Control Console	110	Protects inner chamber from over-pressurization.
OLP-V-1 Relief valve	Chamber Control Console	200	Protects primary LP oxygen system piping from over pressurization.
OLP-V-3 Relief valve	Chamber Control Console	200	Protects secondary LP oxygen system piping from over pressurization.
MLP-V-1 Relief valve	Chamber Control Console	200	Protects mixed gas system piping from over pressurization.

2-7 SUPPORT COMPONENTS.

Other components are included in the operation of the SNDLRCS. These include the FADS III air storage system, auxiliary oxygen storage, HP air compressors, and electrical generators.

2-7.1 FLY AWAY DIVE SYSTEM (FADS) III. The primary air storage and supply component used with the SNDLRCS is the 5000-psig FADS III Air Supply Rack Assembly (ASRA). One FADS III ASRA is included with the recompression chamber. This unit provides approximately 9000 standard cubic feet of reserve air for use with the recompression chamber. Other gas storage and supply systems, such as an Oxygen Supply Rack Assembly (OSRA) or Helium Oxygen Supply Rack Assembly (HOSRA) can be used in addition to the provided gas supply if the additional system provides adequate quantity and quality of gases. The SNDLRCS may be set-up to operate with the FADS III control console assembly (CCA) to provide gas for surface supplied diving operations. This is configuration 4 as described in the FADS III technical manual.

For FADS III ASRA control panel operating instructions, see Appendix A and the *Fly Away Dive System (FADS) III Air System Technical Manual*, S9592-B1-MMO-010.

2-7.2 HP AIR COMPRESSOR. In use, the SNDLRCS uses large quantities of HP breathable quality air. Any HP air compressor that is ANU (Approved for Navy Use) may be used to replenish the air storage banks. Either a diesel or electrically driven compressor may be used; however, if an electrical compressor is used, its amperage must be taken into account for electrical generation requirements. Of note, a 25-scfm HP air compressor will require approximately 6 hours to completely recharge one FADS III ASRA.

The FADS III ASRA is charged via a hose connected directly to the air compressor located outside the SNDLRCS van. On SNDLRCS units constructed after 2007, an HP air charging transition panel is installed in the van door to allow the option of charging the FADS III ASRA while the outer door is closed.

Downloaded from http://www.everyspec.com

2-7.3 ELECTRICAL POWER AND GENERATORS. The SNDLRCS van may be powered from any of the following sources.

- 208-volt, single phase, 60-hertz electrical shoreside power
- 440-volt, 3-phase, 60-hertz shipboard power
- A generator, which can supply either 208-volt, single phase, 60-hertz power or 440-volt, 3-phase, 60-hertz power

Table 2-5 lists the recommended loading for generators used to support the SNDLRCS van.

Table 2-5. Electrical Generators and Recommended Loading

SNDLRCS Van Electrical Loads	Expected Amperage	Expected kW Load	Service Voltage
UPS system	11.3	1.35	110
SNDL lighting	3.7	0.36	110
ECS system	10.5	2.52	220
HVAC unit #1	10.9	2.60	220
HVAC unit #2	10.9	2.60	220
Totals	47.3	9.43	

Based on the vanloads indicated in Table 2-5, a 10-kW generator will be adequate to power all van electrical requirements. Recognizing that operational scenarios that require an electrical generator for the van will also require generated power for van support personnel and equipment, it is recommended that a 20-kW generator be provided. The additional 10-kW capability is an arbitrary value, but should be adequate to power any miscellaneous support loads and will also provide starting capacity for motors rated up to 5 hp.

Should an electrically driven compressor be used, loading information should be obtained directly from the equipment to be used to determine the capacity of the generator to be used.

The above guidelines are provided to assist the person responsible for support services in the selection and provision of a generator with adequate capacity to support overall mission objectives and ensure continuity of power to the SNDLRCS van.

NOTE

Any of these additional support loads must be powered directly from the generator as the SNDLRCS van electrical distribution panel does not have sufficient capacity to power any equipment other than that already permanently connected to the panel.

Downloaded from http://www.everyspec.com

CHAPTER 3

FUNCTIONAL DESCRIPTION

3-1 INTRODUCTION.

This chapter provides a physical and functional description of the Standard Navy Double-Lock Recompression Chamber System (SNDLRCS). Each component is described with its appropriate subsystem and relationship within the system.

3-2 SYSTEM DESCRIPTION.

The SNDLRCS is broken down into the following subsystems:

- SNDLRCS Van
- Recompression Chamber/Piping and Instrumentation
- High-Pressure (HP) Air and Oxygen Reducing Stations
- Environmental Control System (ECS)
- Electrical Power and Lighting System

Additional support equipment includes:

- HP Air Compressor
- Oxygen Supply Rack Assembly (OSRA)
- Helium-Oxygen Supply Rack Assembly (HOSRA)
- NATO mating ring for mating the SNDLRCS with another NATO mating ringed chamber, such as a Transportable Recompression Chamber System (TRCS)
- Generator

3-2.1 FUNCTIONS OF SNDLRCS SYSTEM. The recompression chamber is used primarily for hyperbaric treatment of diving related medical problems, decompression sickness, carbon monoxide poisoning, surface decompression, and administering pressure tests to prospective divers in accordance with the *U.S. Navy Diving Manual*, SS521-AG-PRO-010**.**

The recompression chamber can be used secondarily for hyperbaric oxygen therapy, but only when qualified medical personnel are present.

The chamber has air, oxygen, and mixed gas Built-In Breathing Systems (BIBSs), carbon dioxide and oxygen monitors, and a CO_2 scrubber system, which together reduce the ventilation requirements. The system also includes an environmental control system that regulates temperature inside the chamber.

Components of the oxygen system, air system, environmental control system, and electrical system are mounted on the SNDLRCS van and joined by interconnecting hoses. The SNDLRCS can support two patients and one tender using all treatment tables. Use of electronic gas monitoring instruments and environmental control systems significantly reduces both ventilation and compressed air storage requirements.

Downloaded from http://www.everyspec.com

3-2.2 SNDLRCS VAN. The SNDLRCS van consists of a standard 20' x 8' x 8' International Organization for Standardization (ISO) shipping container with standard ISO external dimensions and tolerances. The van is equipped with weathertight doors to permit personnel entry and the movement of equipment and components. The van is also outfitted with a vestibule, which facilitates access to the chamber. The van is supplied with standard ISO corner fittings for lashing, lifting and stacking.

3-2.3 ELECTRICAL POWER AND LIGHTING SYSTEM. The SNDLRCS is equipped to provide necessary 120/208-volt ac and 24-volt dc power and lighting to the van, recompression chamber, and supporting systems, as follows:

- External power sources are connected using cables that have the proper connectors (supplied with the van) at the van's power receptacle box.
- Either 440-volt ac or 220-volt ac power input, as appropriate, shall be selected on the manual bus transfer (MBT) switch prior to energizing the load distribution panel by closing the panel main breaker.
- The SNDLRCS load distribution panel is provided for the distribution of electrical power within the van.
- The van is equipped with four 120-volt, 60-hertz, 15-amp electrical convenience outlets throughout the van.
- The van has four low-temperature rated fluorescent lighting fixtures mounted to the ceiling, one of which is provided with emergency battery backup power.
- The SNDLRCS is also equipped with an Uninterruptible Power Supply (UPS) battery backup system that will supply emergency power to the chamber communications, the carbon dioxide scrubber, the interior chamber lighting, the ECS fan, and the light above the Chamber Control Console through brief power outages.

3-2.3.1 SNDLRCS Van Grounding.

DANGER

Failure to properly ground the SNDLRCS van may result in injury or death to personnel.

The SNDLRCS van should be properly grounded to avoid electric shock. Grounding is typically performed during installation. See section 8-8 for information about grounding the SNDLRCS van.

3-2.3.2 Power Receptacle Box.

DANGER

Set the manual bus transfer (MBT) switch to the OFF position before connecting or disconnecting ANY electrical power supply cables from the power receptacle box. Failure to do so could cause death to personnel and damage to the equipment in the SNDLRCS van.

Power is supplied to the power receptacle box (see Figure 3-1) through one of two power input assemblies (see section 8-5). The power receptacle box has a 208-volt, 50-amp, 4-wire, 3-pole, locking,

Downloaded from http://www.everyspec.com

power input receptacle (Marinco, Catalog No. 6373EL) and a 440-volt, 3-wire, 4-pole, 100-amp power input receptacle (Crouse-Hinds, Catalog No. APQ1048).

Figure 3-1. Power Receptacle Box

3-2.3.3 Manual Bus Transfer (MBT) Switch. From the power receptacle box, power is supplied directly (in the case of 208-volt power) or indirectly, after passing through an isolation stepdown transformer (in the case of 440-volt power), to the manual bus transfer (MBT) switch (see Figure 3-2).

NOTE

The manual bus transfer (MBT) switch must be placed in the same position as the input voltage.

Figure 3-2. Manual Bus Transfer (MBT) Switch

Downloaded from http://www.everyspec.com

3-2.3.4 Power Distribution Panel. From the MBT, 208-volt power is delivered to the power distribution panel (see Figure 3-3). The SNDLRCS power distribution panel is a load center rated at 120/240 volts, 100 amps and is provided with a 50-amp main breaker.

Figure 3-3. Power Distribution Panel (50-amp Main Breaker)

3-2.3.5 Uninterruptible Power Supply (UPS) and Transformer. The UPS (see Figure 3-4) provides a battery backup system that will power one overhead light, the inner lock (IL) and outer lock (OL) chamber lights, chamber communications, the CO_2 scrubber, and the ECS fan through brief power outages. The battery will last approximately 1.5 to 2 hours when all of this equipment is on. The UPS is mounted on the wall of the SNDLRCS van above the chamber. The UPS contains a rechargeable battery, which recharges automatically when 120-volt power is supplied.

Figure 3-4. Uninterruptible Power Supply and Transformer

Downloaded from http://www.everyspec.com

Located below the UPS, the 24-volt transformer provides electrical power to internal components (fans, instrumentation, and communication) within the recompression chamber.

3-2.3.6 Electrical Schematics. The power and lighting for the SNDLRCS van is shown in Figure 3-5. This figure is continued in Figures 3-6 and 3-7, which provide the electrical schematic for the SNDLRCS recompression chamber.

3-2.4 RECOMPRESSION CHAMBER PIPING AND INSTRUMENTATION. Alloy ASTM A240 GR S31803 stainless steel is used to construct the SNDLRCS chamber shell to provide high design strength and corrosion resistant properties. The SNDLRCS chamber is fitted with life support operating and control systems to support treatment of decompression sickness, carbon monoxide poisoning, surface decompression, and pressure tests for prospective divers in accordance with *U.S. Navy Diving Manual*, SS521-AG-PRO-010. Figure 3-8 shows the recompression chamber piping schematic. This figure is supplemented by Figures 3-9 through 3-11, which show the Oxygen System Piping Schematic, the HP Air System Piping Schematic, and the Mixed Gas System Piping Schematic, respectively.

Downloaded from http://www.everyspec.com

THIS PAGE INTENTIONALLY LEFT BLANK

Downloaded from http://www.everyspec.com

NOTES:
1)ALL ELECTRICAL CIRCUITS ARE IN EMT CONDUIT. CHAMBER TO VAN POWER INTERFACE WILL BE LOW SMOKE CABLE MS-(M2464313-22UN) LST/ HOF-6.

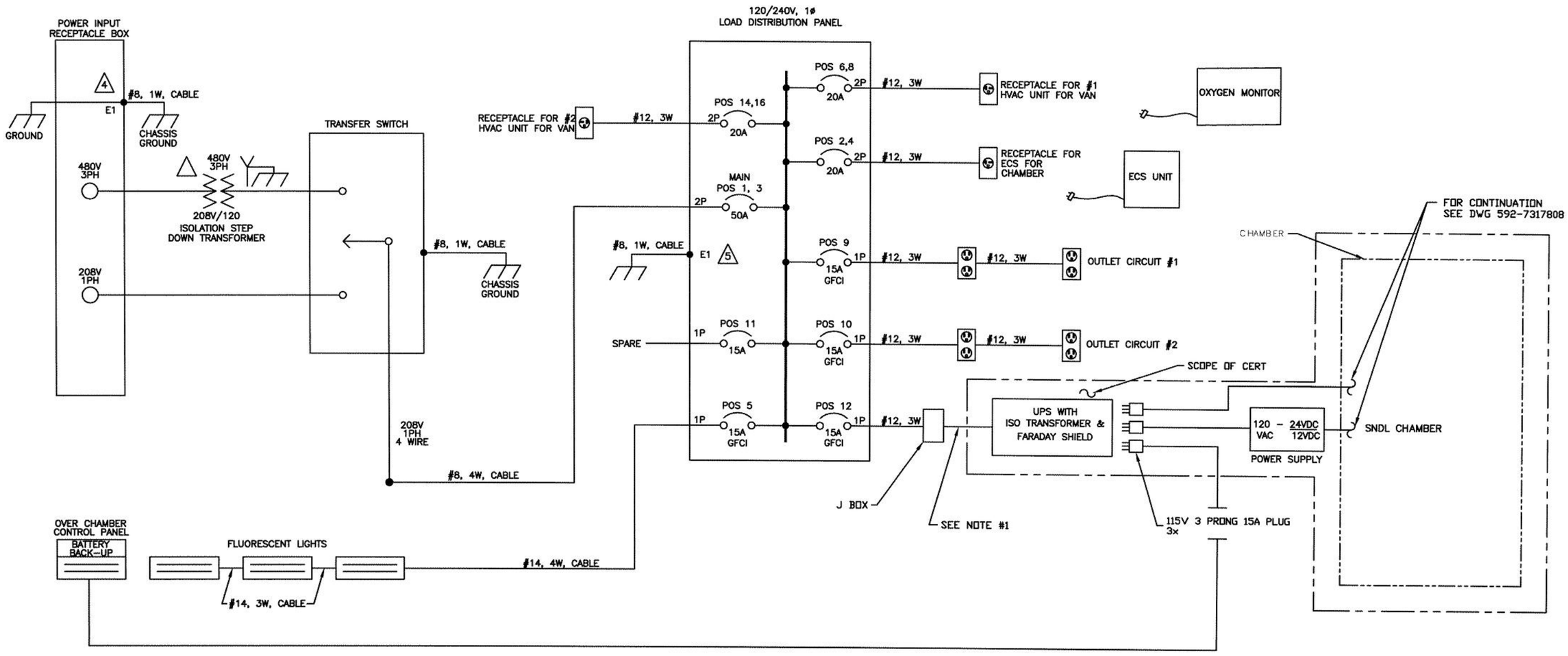

Figure 3-5. SNDLRCS Van Power and Lighting Schematic

Downloaded from http://www.everyspec.com

Downloaded from http://www.everyspec.com

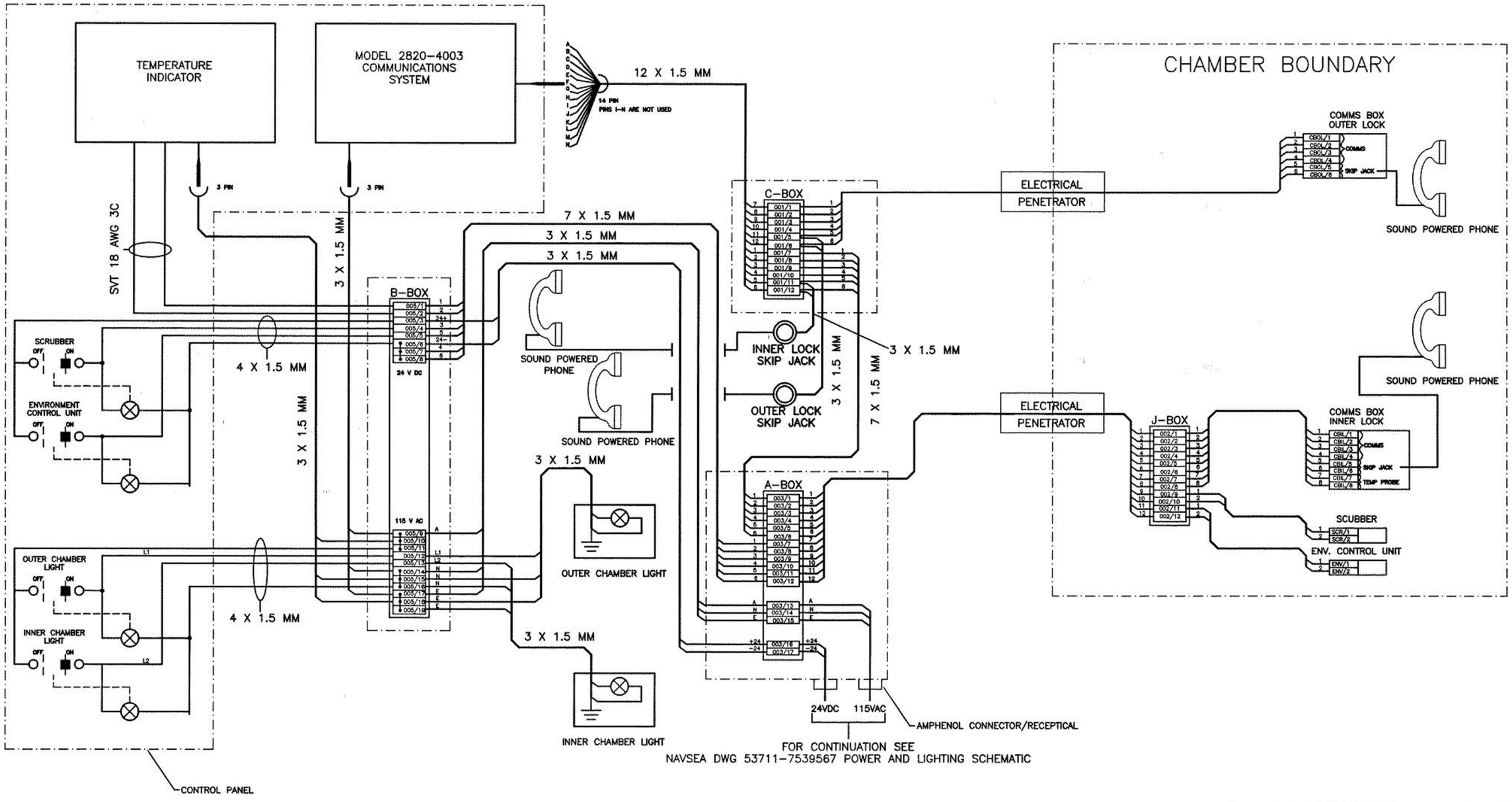

Figure 3-6. SNDLRCS Recompression Chamber Electrical Schematic – Part 1

Downloaded from http://www.everyspec.com

Downloaded from http://www.everyspec.com

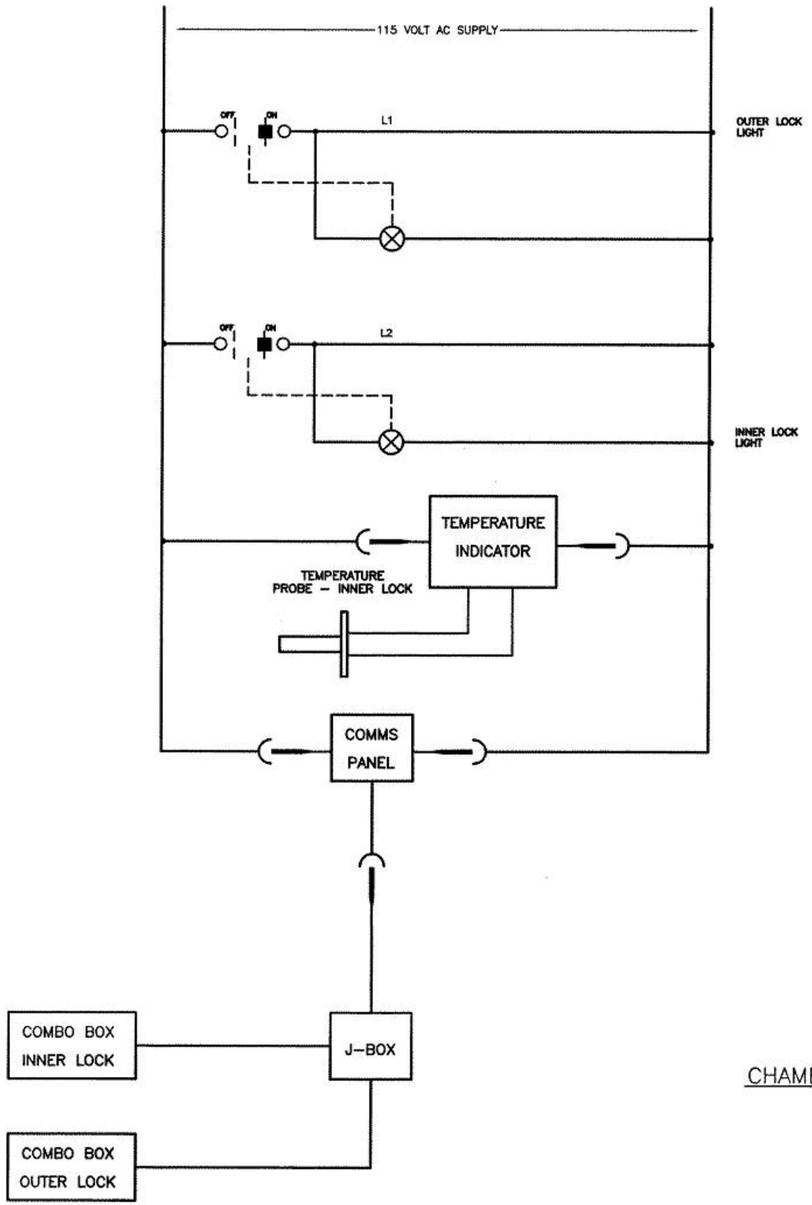

CHAMBER POWER BUS DIAGRAM AC/DC

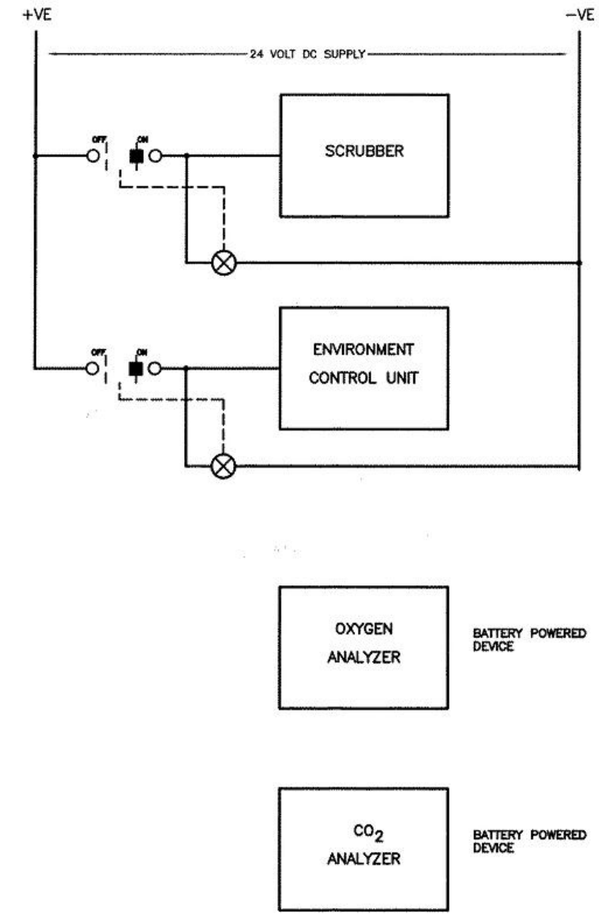

Figure 3-7. SNDLRCS Recompression Chamber Electrical Schematic – Part 2

Downloaded from http://www.everyspec.com

Downloaded from http://www.everyspec.com

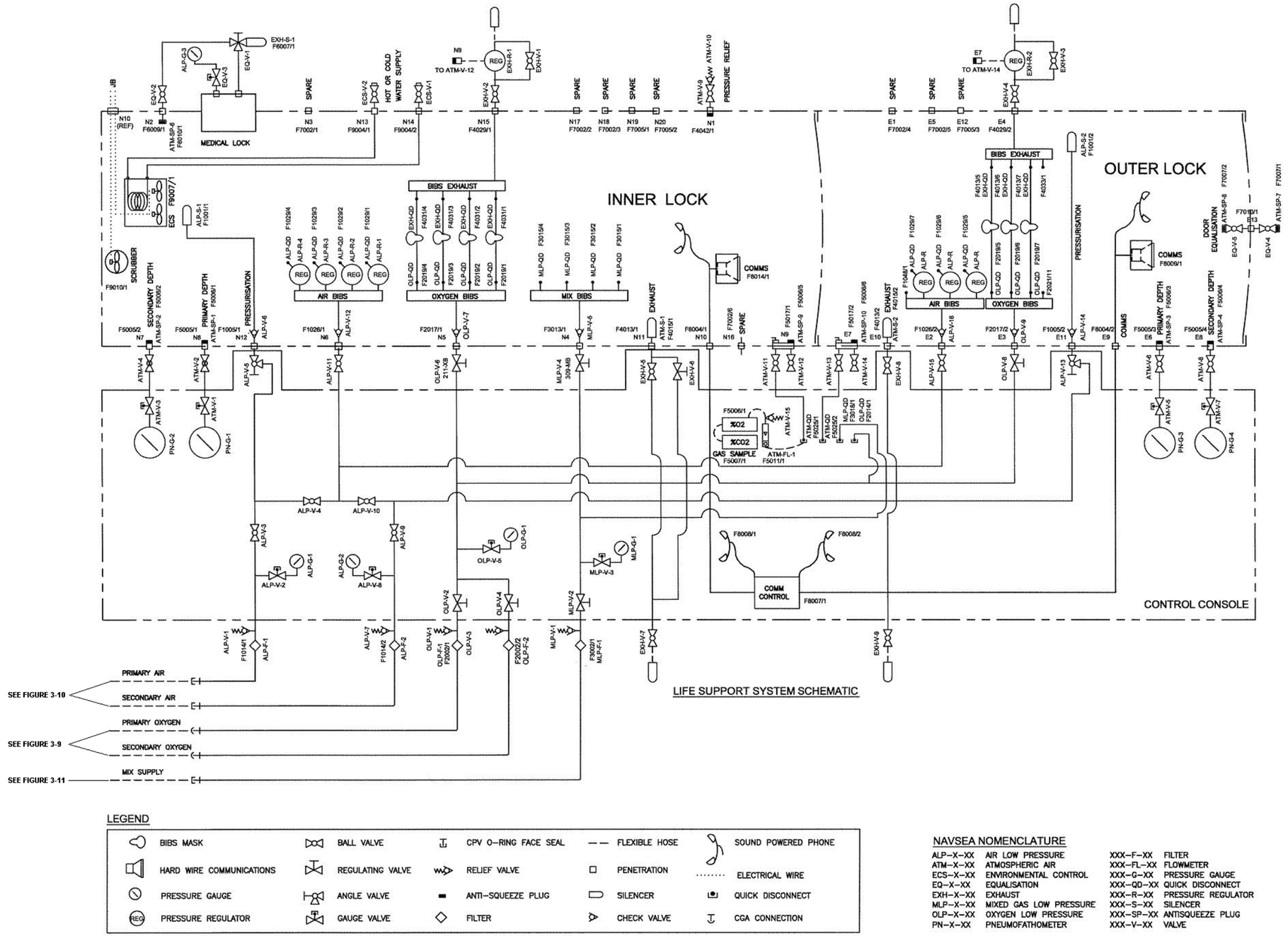

Figure 3-8. Chamber Piping Schematic

Downloaded from http://www.everyspec.com

Downloaded from http://www.everyspec.com

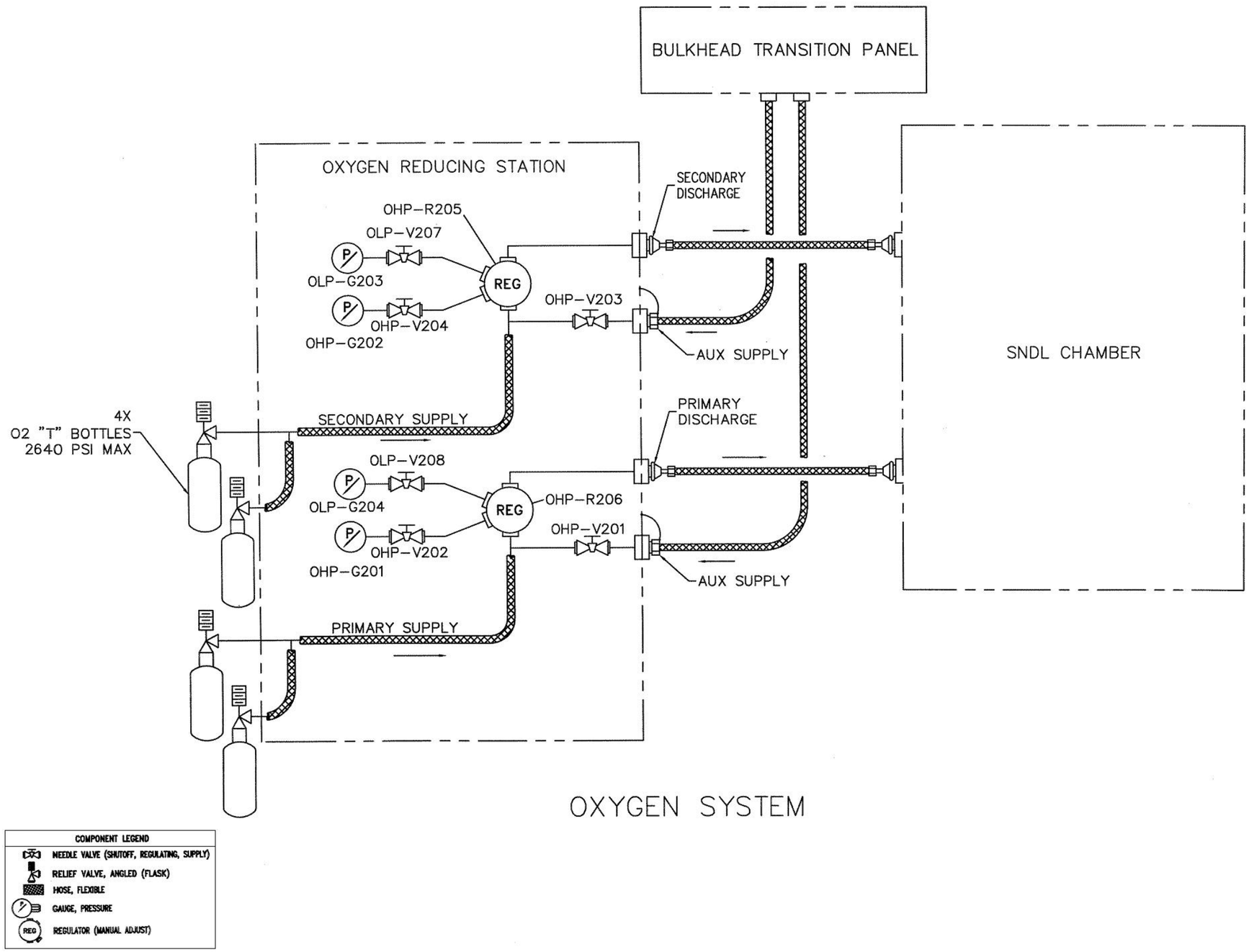

Figure 3-9. Oxygen System Piping Schematic

Downloaded from http://www.everyspec.com

Downloaded from http://www.everyspec.com

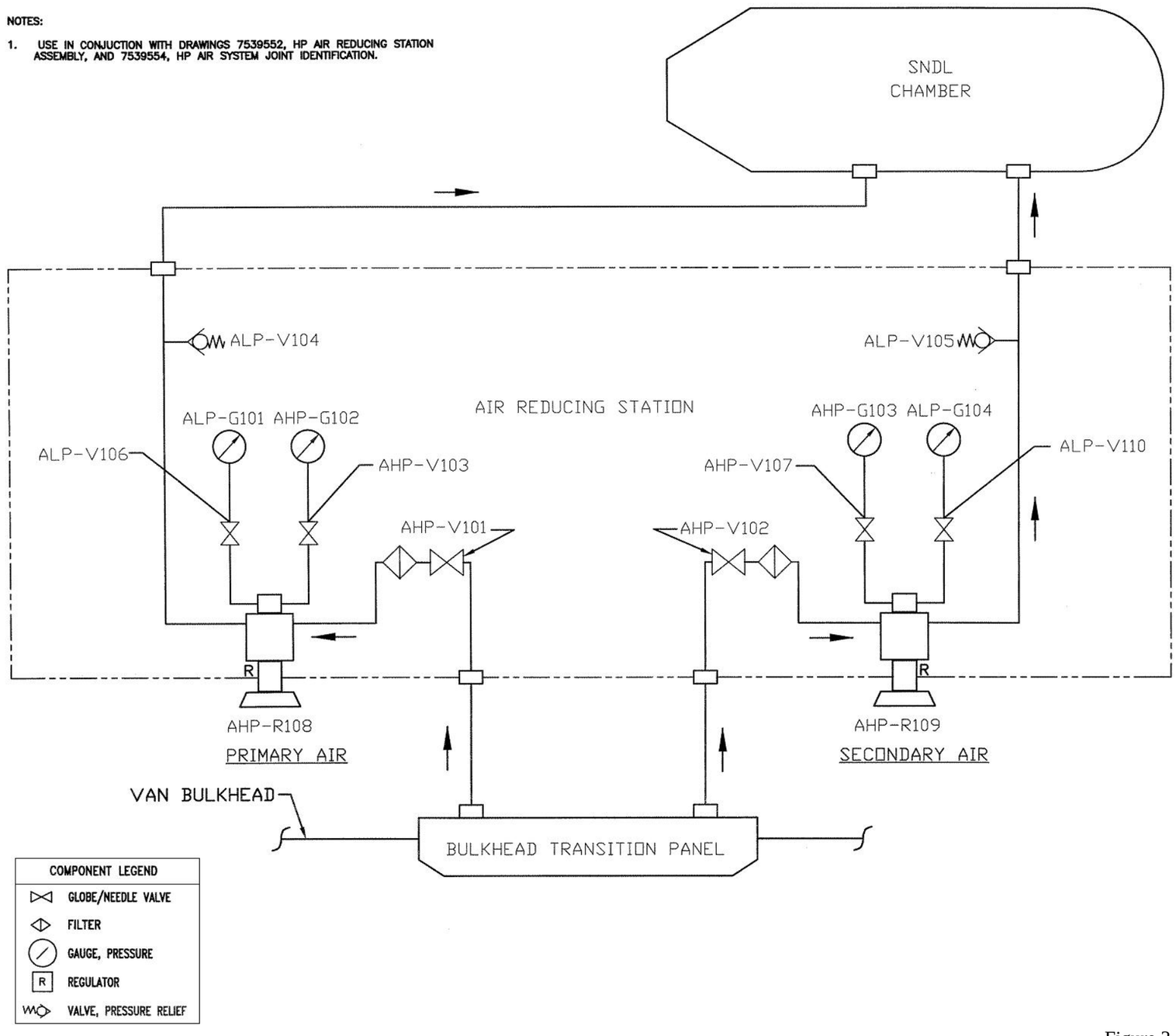

Figure 3-10. HP Air System Piping Schematic

Downloaded from http://www.everyspec.com

Downloaded from http://www.everyspec.com

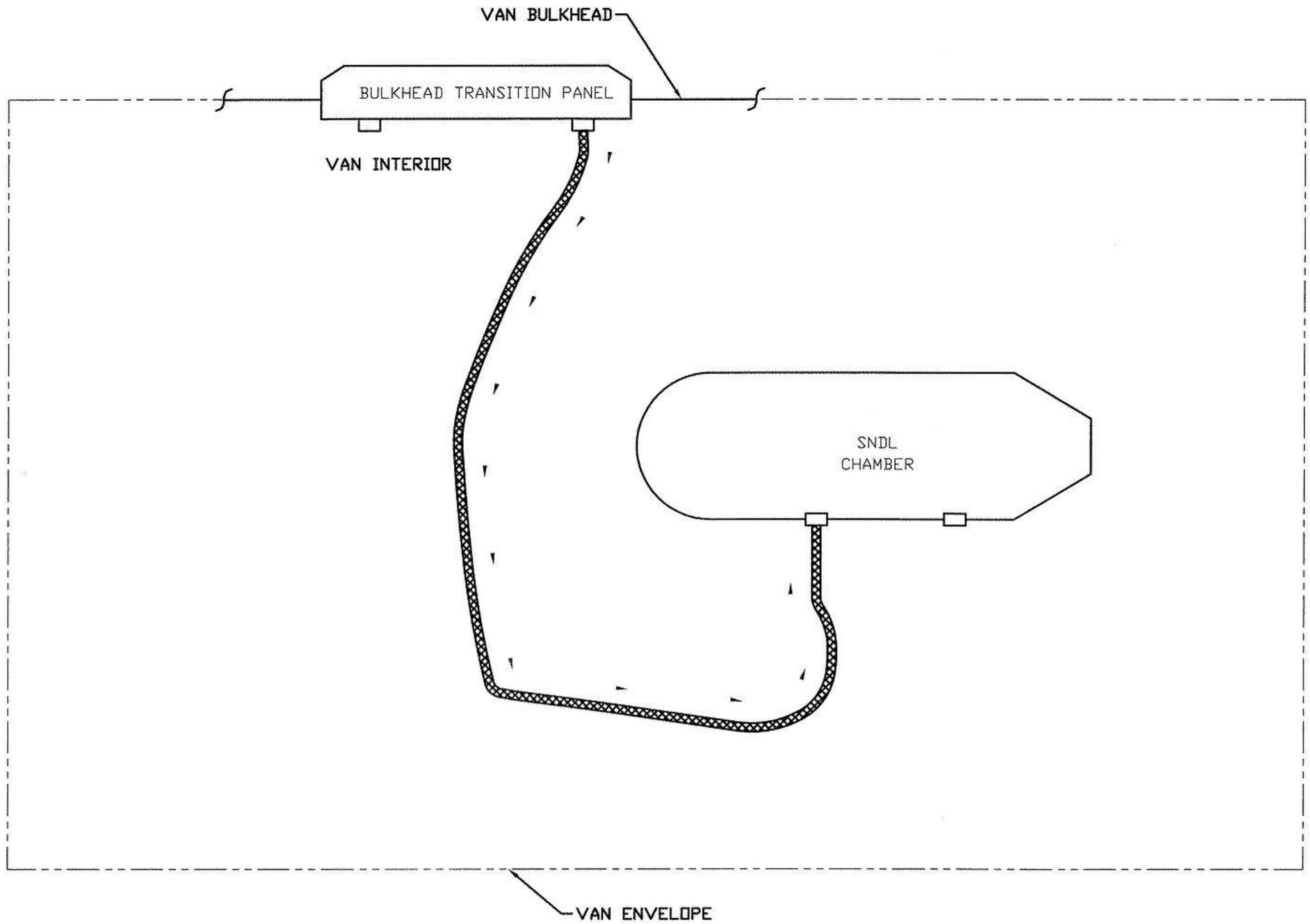

Figure 3-11. Mixed Gas System Piping Schematic

Downloaded from http://www.everyspec.com

Downloaded from http://www.everyspec.com

3-2.5 CHAMBER CONTROL CONSOLE. The Chamber Control Console (Figure 3-12) monitors and controls the air supply and air quality in both the inner lock (IL) and outer lock (OL) of the recompression chamber.

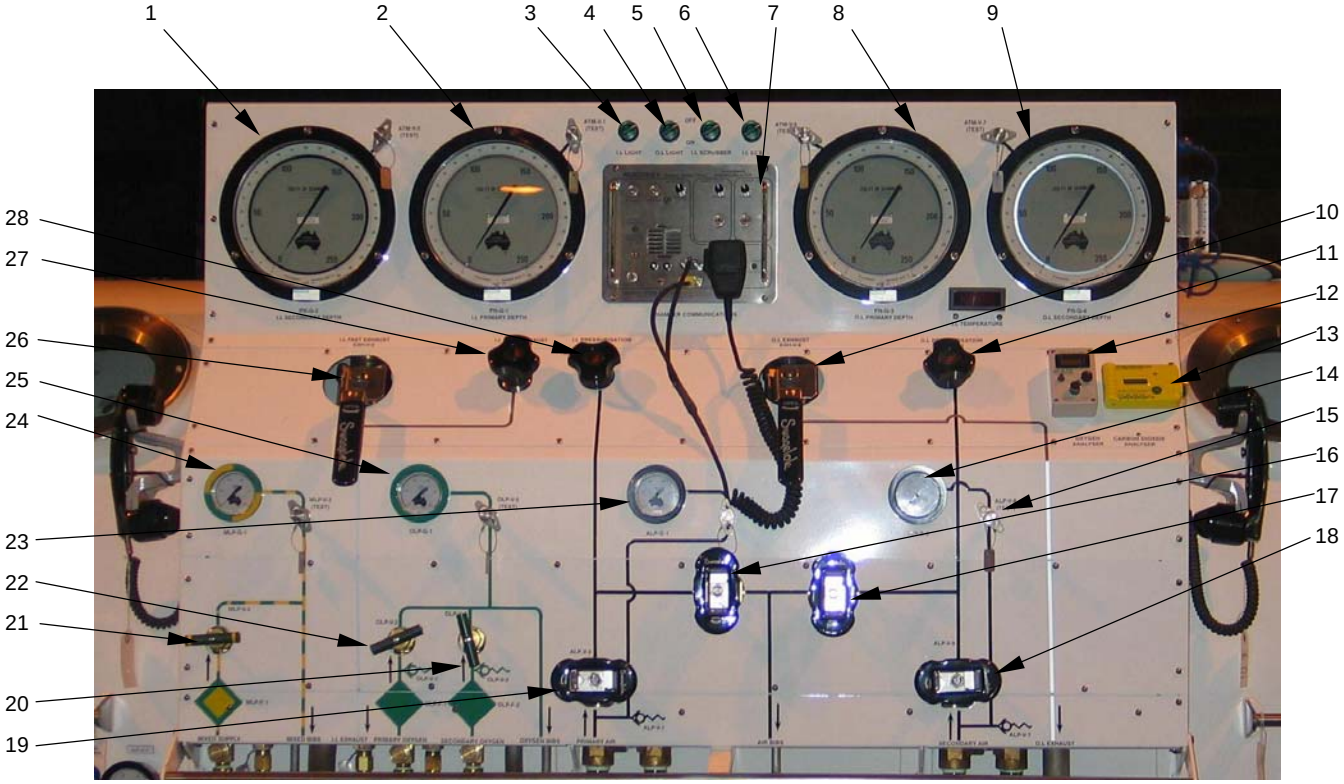

Figure 3-12. Chamber Control Console

3-2.5.1 Inner and Outer Lock Depth Gauges. Each gauge indicates the depth in feet of seawater corresponding to the pressure of the inner and outer locks of the recompression chamber. In Figure 3-12, items 1 and 2 are the Inner Lock (IL) Secondary and Primary Depth Gauges, PN-G-2 and PN-G-1, and items 8 and 9 are the Outer Lock (OL) Primary and Secondary Depth Gauges, PN-G-3 and PN-G-4.

3-2.5.2 IL and OL Light Switches. Each switch (Figure 3-12, items 3 and 4) controls the 110-volt fluorescent lights located over the inner and outer chamber viewports.

3-2.5.3 IL Carbon Dioxide (CO_2) Scrubber Switch. This switch (Figure 3-12, item 5) controls 24-volt dc power to the circulating fan for the carbon dioxide scrubber.

3-2.5.4 IL Environmental Control System (ECS) Switch. This switch (Figure 3-12, item 6) controls 24-volt dc power to the circulating fan for the ECS heat exchanger.

3-2.5.5 Chamber Communications Panel. This panel (Figure 3-12, item 7) controls the electronic communication system to allow voice communication with the personnel inside the chamber. A sound-powered backup phone is provided and is located on either end of the chamber control console.

Downloaded from http://www.everyspec.com

3-2.5.6 IL and OL Fast Exhaust Valves. These quarter-turn ball valves are used to rapidly release the pressure from the IL and/or the OL to atmosphere via the chamber vent manifold piping. In Figure 3-12, item 26 (EXH-V-5) is the IL Fast Exhaust Valve and item 10 (EXH-V-8) is the OL Fast Exhaust Valve.

3-2.5.7 IL and OL Low-Pressure (LP) Air Pressurization Valves. These 1/2" double seat valves are used to pressurize the IL and OL depth by supplying LP compressed air from the air supply reducers. In Figure 3-12, item 28 (ALP-V-5) is the IL LP Air Pressurization Valve and item 11 (ALP-V-13) is the OL LP Air Pressurization Valve.

3-2.5.8 Oxygen (O_2) Analyzer. This device (Figure 3-12, item 12), when connected to the air sampling system, is used to monitor the amount of oxygen in the inner lock, outer lock, breathing air supply, oxygen supply, or mixed gas supply piping.

3-2.5.9 CO_2 Analyzer. This device (Figure 3-12, item 13), when connected to the air sampling system, is used to monitor the amount of CO_2 that is present in the IL, OL, breathing air supply, O_2 supply, or mixed gas supply piping.

3-2.5.10 Primary and Secondary LP Air Supply Gauges. These gauges indicate the pressures of the LP air supplied from the primary and secondary high-pressure (HP) air regulators. This air is used as a supply to the LP air BIBS manifolds in the inner and outer locks and as a pressurization source for the inner and outer locks. In Figure 3-12, item 23 (ALP-G-1) is the Primary LP Air Supply Gauge and item 14 (ALP-G-2) is the Secondary LP Air Supply Gauge.

3-2.5.11 Chamber Control Console Gauge Valves. The gauge valves are mounted in the supply piping to each gauge in the system. These valves are designed to act as isolation valves or as a test fitting to allow for testing the gauge in place. In Figure 3-12, item 15, the Secondary LP Air Supply Gauge Valve (ALP-V-8), is a representative example. See Figure 2-1 for the names and locations of all Chamber Control Console gauge valves.

3-2.5.12 Primary and Secondary LP Air Cross Connect Valves. These 1/2" ball valves control the primary and secondary LP air supplies to the air BIBS manifolds in the inner and outer locks. They also provide primary air to OL pressurization and/or secondary air to IL pressurization. In Figure 3-12, item 17 (ALP-V-4) is the Primary LP Air Cross Connect Valve and item 16 (ALP-V-10) is the Secondary LP Air Cross Connect Valve.

3-2.5.13 Primary and Secondary LP Air Shutoff Valves. These 1/2" ball valves control the primary and secondary LP air supplies to the chamber from the HP air reducers. In Figure 3-12, item 19 (ALP-V-3) is the Primary LP Air Shutoff Valve and item 18 (ALP-V-9) is the Secondary LP Air Shutoff Valve.

3-2.5.14 Primary and Secondary O_2 Supply Valves. These needle valves control the pressure of the oxygen supplied to the oxygen BIBS manifold. In Figure 3-12, item 22 (OLP-V-2) is the Primary O_2 Supply Valve and item 20 (OLP-V-4) is the Secondary O_2 Supply Valve.

3-2.5.15 LP Mixed Gas Shutoff Valve. This needle valve controls the pressure of the mixed gas supplied to the mixed gas BIBS manifold. In Figure 3-12, item 21 (MLP-V-2) is the LP Mixed Gas Shutoff Valve.

Downloaded from http://www.everyspec.com

3-2.5.16 LP Mixed Gas Pressure Gauge. This gauge indicates the pressure of the mixed gas supply pressure to the mixed gas BIBS manifold in the inner lock. In Figure 3-12, item 24 (MLP-G-1) is the LP Mixed Gas Pressure Gauge.

3-2.5.17 LP O_2 Supply Gauge. This gauge indicates the pressure of the oxygen gas supply pressure to the oxygen BIBS manifold in the inner lock. In Figure 3-12, item 25 (OLP-G-1) is the LP O_2 Supply Gauge.

3-2.5.18 IL Slow Exhaust Valve. This 1/2" double seat valve is used to decrease the IL depth by venting the IL pressure to atmosphere via the chamber vent manifold piping. In Figure 3-12, item 27 (EXH-V-6) is the IL Slow Exhaust Valve.

3-2.6 AIR/O_2/MIXED GAS SYSTEMS. The SNDLRCS is outfitted with an Air Supply Rack Assembly (ASRA) that supplies HP air to the SNDLRCS HP Air Reducing Station. The HP Air Reducing Station supplies primary and secondary air for chamber operations.

Four O_2 T-bottles supply HP oxygen to the SNDLRCS Oxygen Reducing Station. The Oxygen Reducing Station provides primary and secondary breathing oxygen to the recompression chamber's oxygen Built-in Breathing System (BIBS). The optional OSRA is an alternate source of oxygen for the BIBS. An O_2 monitor mounted above the onboard O_2 cylinders (see Figure 7-2) sounds an alarm if the O_2 level in the SNDLRCS van exceeds recommended levels.

The SNDLRCS also has the capability of providing mixed gas to the recompression chamber mixed gas BIBS by using the optional HOSRA. Low-pressure mixed gas can be supplied directly to the chamber.

Breathing gases used in this system shall meet the purity standards specified in Chapter 4 of the *U.S. Navy Diving Manual*, SS521-AG-PRO-010.

3-2.6.1 Air Supply Rack Assembly (ASRA). The ASRA is an assembly of nine composite HP air storage flasks (3.15 cubic foot floodable volume) mounted vertically and configured with the required associated piping and interconnecting hoses to connect each flask to the system via the manifold. The ASRA can store in excess of 9000 cubic feet of breathing air at 5000 psi.

Each flask is double ported, with the bottom port supporting a condensate drain valve fitted with a thermal fuse designed to open and relieve system pressure as ambient temperature reaches or exceeds 217°F. Top ports of the flasks are supported with isolation valves, each of which is fitted with a pressure rupture disk designed to blow out when pressure exceeds 8000 psi.

All flask valves – isolation valves at the top of the flasks and condensate drain valves at the bottom of the flasks – are actuated (opened or closed) from the ASRA front panel via flex reach rod assemblies to each respective valve. Condensate drain valves are all connected in series to one another and supported with a final drain stop valve. Isolation valves are configured to separate the nine flasks into three banks. Bank 1 contains three flasks, bank 2 contains four flasks, and bank 3 contains two flasks. Each bank is supported with its own pressure gauge and bank-charging valve.

NOTE

The ASRA is provided with two sets of discharge ports; the lower, or horizontal, ports would normally be used in a field application when system interfacing hoses would be run over the deck. Placement of

Downloaded from http://www.everyspec.com

the ASRA in some locations may require the use of the upper, or vertical, ports.

The charging port interface located on the right-hand side of the ASRA accepts HP air provided from the HP air compressor system at pressures ranging to 5000 psi. Entering the charging port, the air then flows through a 10-micron filter, past a check valve, past a relief valve set at 5500 psi, and then into the charging distribution manifold. Using bank charge valves in the manifold, individual banks or any combination of banks can be charged simultaneously.

Also located on the right-hand side of the ASRA is the scuba charge hose assembly. The scuba hose assembly is configured into the system allowing scuba bottle charging from any combination of banks. The scuba supply valve allows HP air to pass through a 10-micron filter to a pressure regulator capable of regulating pressure not to exceed the maximum scuba charge limit of 3000 psi. Additionally, the scuba circuit is provided with a 3300-psi relief valve to protect the circuit and operators. The ASRA includes the following components:

3-2.6.1.1 HP Hose Assemblies. Three 42-foot long HP hose assemblies are provided with the ASRA. Each has a stainless steel wire strength member to provide safety in case the hose is cut or separates from the hose end fitting. Two of the hose assemblies provide interfaces between the ASRA HP outlets and the HP Air Reducing Station. The third assembly is provided as a charging interface between the HP compressor discharge and the ASRA HP charging inlet. Snap shackles are provided at both ends of the wire strength member for attachment to securing points provided in the immediate area of the hose connection interface. These three hose assemblies are identical to each other and totally interchangeable in the applications described in this section.

3-2.6.1.2 Scuba Charge Hose Assembly. The scuba charge hose assembly is approximately six feet long and is used to charge scuba bottles from the ASRA. The scuba charge hose assembly is permanently connected to the scuba charge HP outlet port on the right side of the ASRA. The hose assembly has a stainless steel wire rope lashed to the hose to restrain the assembly in case the hose is cut or separates from the hose end fitting. Snap shackles are affixed to the ends of the wire rope providing attachment of the strain relief at the ASRA and to the valve of the scuba bottle being charged.

3-2.6.2 HP Air Reducing Station. The HP Air Reducing Station (see Figure 3-13) allows monitoring and regulation of primary and secondary airflow to the chamber. The HP Air Reducing Station is equipped with a hand-loaded primary air regulator (AHP-R-108) and a hand-loaded secondary air regulator (AHP-R-109).

HP compressed air flows from the ASRA to the HP Air Reducing Station through HP air hoses. Opening the primary HP supply valve (AHP-V-101) allows HP air to register on the primary HP air supply gauge (AHP-G-102) and applies HP air to the primary air regulator (AHP-R-108). Loading the primary air regulator (AHP-R-108) to 250 psi allows LP air to register on the primary LP air supply gauge (ALP-G-101).

Opening the secondary HP supply valve (AHP-V-102) allows HP air to register on the secondary HP air supply gauge (AHP-G-103), and applies HP air to the secondary air regulator (AHP-R-109). Loading the secondary air regulator (AHP-R-109) to 250 psi allows LP air to register on the secondary LP air supply gauge (ALP-G-104).

Downloaded from http://www.everyspec.com

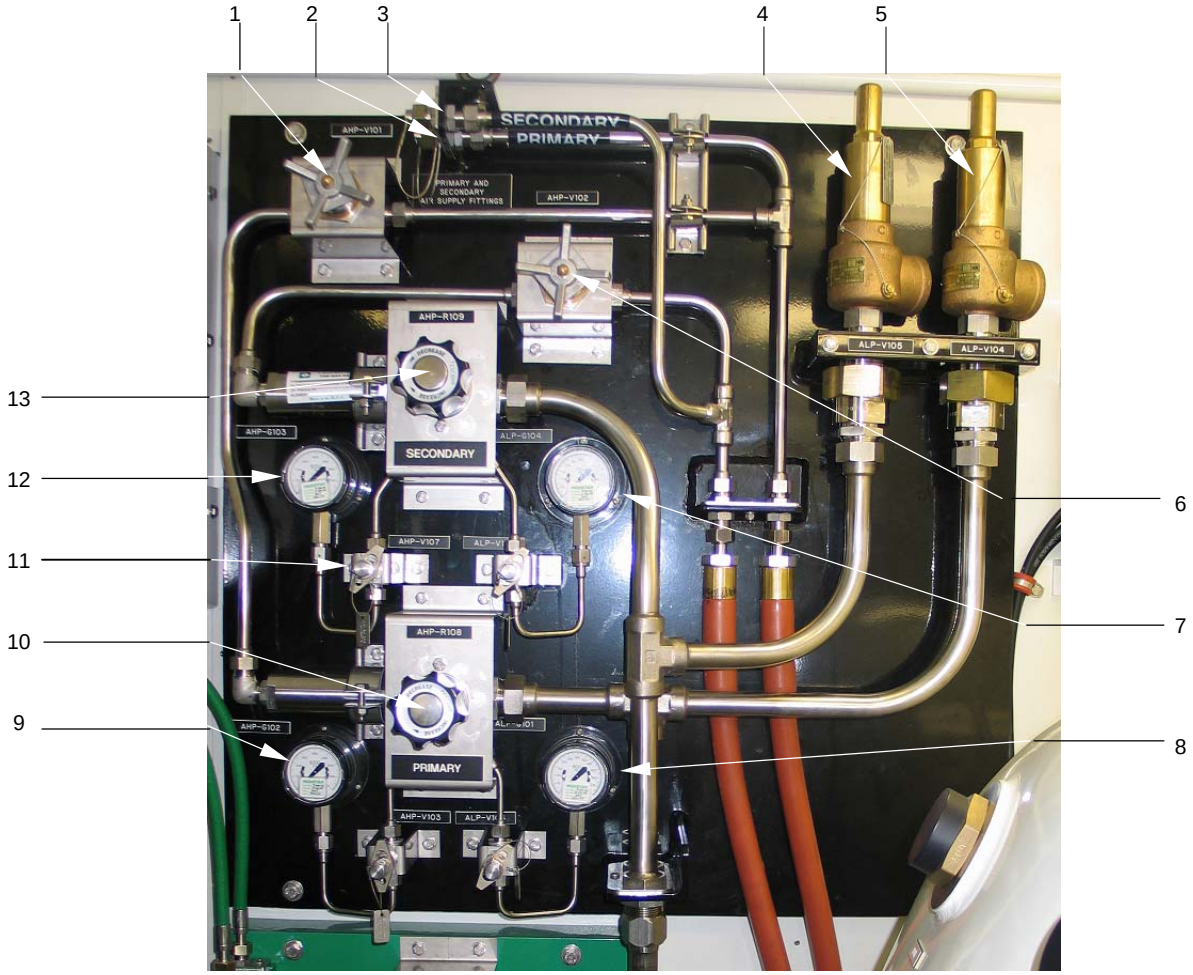

Figure 3-13. HP Air Reducing Station

3-2.6.2.1 Primary and Secondary HP Air Supply Valves. These 1/2" globe valves are used to isolate the primary and secondary HP air sources from the HP Air Reducing Station. In Figure 3-13, item 1 (AHP-V-101) is the Primary HP Air Supply Valve and item 6 (AHP-V-102) is the Secondary HP Air Supply Valve.

3-2.6.2.2 Primary and Secondary HP Air Connectors. The HP air connectors are compression style HP air fittings. They connect incoming HP air from the Fly Away Dive System (FADS) III ASRA to the HP Air Reducing Station. In Figure 3-13, item 2 is the Primary HP Air Connector and item 3 is the Secondary HP Air Connector.

3-2.6.2.3 Primary and Secondary LP Air Relief Valves. The relief valves open to relieve a HP condition at the outlet of the HP Air Reducing Station. HP air relieved from these valves is vented to the area surrounding the valve. In Figure 3-13, item 5 (ALP-V-104) is the Primary LP Air Relief Valve and item 4 (ALP-V-105) is the Secondary LP Air Relief Valve.

3-2.6.2.4 Primary and Secondary LP Air Supply Gauges. These gauges indicate the outlet pressure at the downstream side of the primary and secondary HP reducing stations. These gauges are used while setting the primary and secondary reducers and to monitor the LP air system during operation. In Figure

Downloaded from http://www.everyspec.com

3-13, item 8 (ALP-G-101) is the Primary LP Air Supply Gauge and item 7 (ALP-G-104) is the Secondary LP Air Supply Gauge.

3-2.6.2.5 Primary and Secondary HP Air Supply Gauges. These gauges indicate the pressure at the inlet side of the HP air regulator valves. These gauges will reflect the pressure at the FADS III air bank or other supply system during operation of the recompression chamber. In Figure 3-13, item 9 (AHP-G-102) is the Primary HP Air Supply Gauge and item 12 (AHP-G-103) is the Secondary HP Air Supply Gauge.

3-2.6.2.6 Primary and Secondary HP Air Regulators. The air pressure regulators are spring-loaded, diaphragm-controlled, air pressure control devices. Once set, the regulator will maintain a constant outlet pressure over a wide range of inlet pressures and outlet flow rates. In Figure 3-13, item 10 (AHP-R-108) is the Primary HP Air Regulator and item 13 (AHP-R-109) is the Secondary HP Air Regulator.

3-2.6.2.7 HP Air Reducing Station Gauge Isolation Valves. The gauge isolation valves are mounted in the supply piping to each gauge in the system. These valves are designed to act as stop valves or as test fittings to allow for testing the gauge in place. In Figure 3-13, item 11, the Secondary HP Air Gauge Isolation Valve (AHP-V-107), is a representative example. See Figure 2-6 for the names and locations of all HP Air Reducing Station gauge isolation valves.

3-2.6.3 Oxygen Reducing Station. The Oxygen Reducing Station (see Figure 3-14) allows monitoring and regulation of primary and secondary oxygen flow to the chamber's Built-In Breathing System (BIBS).

High-pressure compressed oxygen flows from the oxygen source to the oxygen reducing station through HP oxygen hoses. The HP oxygen flows into the oxygen reducing station and registers on the primary HP oxygen supply gauge (OHP-G-201) and applies HP oxygen to the primary oxygen regulator (OHP-R-206). Loading the primary oxygen regulator (OHP-R-206) to 100 psi allows LP oxygen to register on the primary LP oxygen supply gauge (OLP-G-204).

The HP oxygen flows into the oxygen reducing station and registers on the secondary HP oxygen supply gauge (OHP-G-202) and applies HP oxygen to the secondary oxygen regulator (OHP-R-205). Loading the secondary oxygen regulator (OHP-R-205) to 100 psi allows LP oxygen to register on the secondary LP oxygen supply gauge (OLP-G-203).

3-2.6.3.1 Primary and Secondary HP Oxygen Regulators. The oxygen pressure regulators are spring-loaded, diaphragm-controlled, air pressure control devices. Once set, the regulator will maintain a constant outlet pressure over a wide range of inlet pressures and outlet flow rates. In Figure 3-14, item 4 (OHP-R-206) is the Primary HP Oxygen Regulator and item 1 (OHP-R-205) is the Secondary HP Oxygen Regulator.

3-2.6.3.2 Primary and Secondary LP Oxygen Supply Gauges. These gauges indicate the outlet pressure at the downstream side of the primary and secondary oxygen reducing stations. These gauges are used while setting the primary and secondary reducers and to monitor the LP oxygen system during operation. In Figure 3-14, item 5 (OLP-G-204) is the Primary LP Oxygen Supply Gauge and item 2 (OLP-G-203) is the Secondary LP Oxygen Supply Gauge.

Downloaded from http://www.everyspec.com

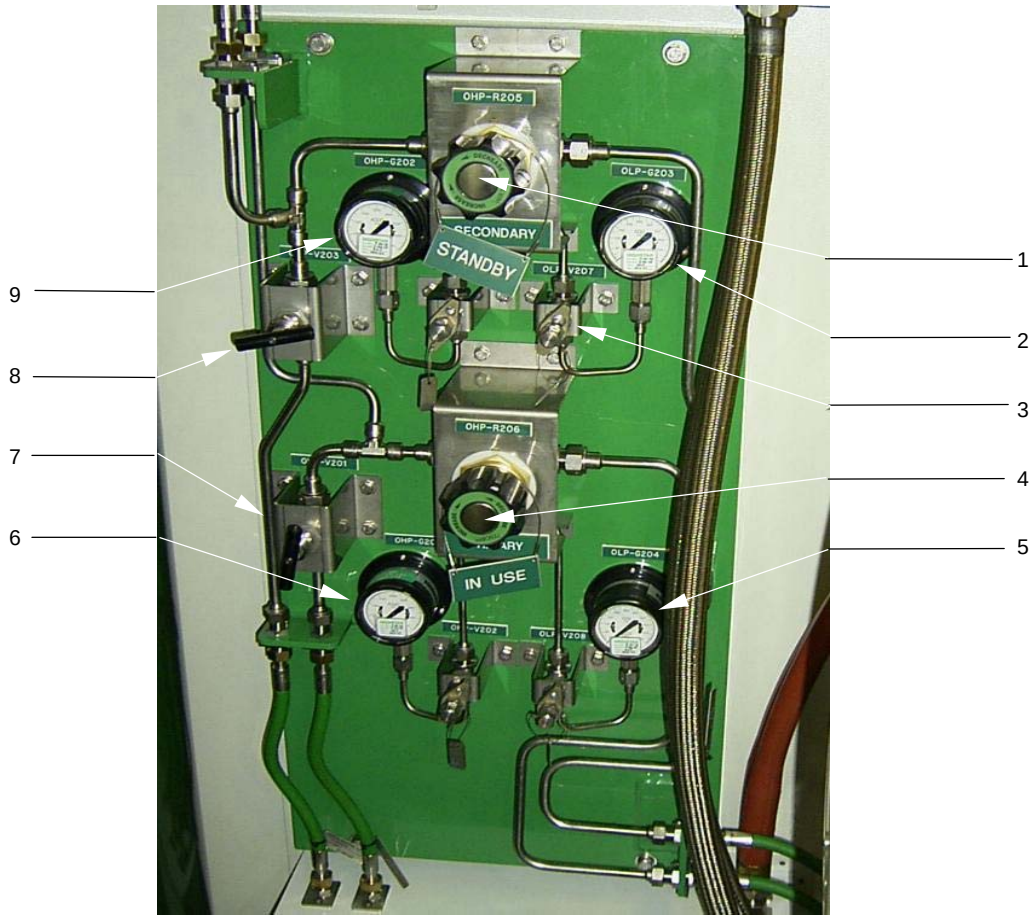

Figure 3-14. Oxygen (O_2) Reducing Station

3-2.6.3.3 Primary and Secondary HP Oxygen Supply Gauges. These gauges indicate the pressure at the inlet side of the oxygen reducing valves. These gauges will reflect the pressure at the outlet of the online oxygen air bank or other supply system during operation of the recompression chamber. In Figure 3-14, item 6 (OHP-G-201) is the Primary HP Oxygen Supply Gauge and item 9 (OHP-G-202) is the Secondary HP Oxygen Supply Gauge.

3-2.6.3.4 Primary and Secondary HP Oxygen External Supply Shutoff Valves. These 1/2" needle valves are used to isolate the outside HP oxygen source from the reducing station. In Figure 3-14, item 7 (OHP-V-201) is the Primary HP Oxygen External Supply Shutoff Valve and item 8 (OHP-V-203) is the Secondary HP Oxygen External Supply Shutoff Valve.

3-2.6.3.5 Oxygen Reducing Station Gauge Isolation Valves. The gauge isolation valves are mounted in the supply piping to each gauge in the system. These isolation valves are designed to act as stop valves or as a test fitting to allow for testing the gauge in place. In Figure 3-14, item 3, the Secondary LP Oxygen Gauge Isolation Valve (OLP-V-207), is a representative example. See Figure 2-7 for the names and locations of all Oxygen Reducing Station gauge isolation valves.

3-2.6.4 External Compressed Gas Supply Connections. Mounted on the outer wall of the SNDLRCS van are connections for primary and secondary oxygen supply, mixed gas supply, and primary and secondary HP air supply (see Figure 3-15). These connections allow HP air, oxygen and/or

Downloaded from http://www.everyspec.com

LP mixed gas to be piped through a bulkhead transition panel within the van and continue to their appropriate systems via flexible HP hoses.

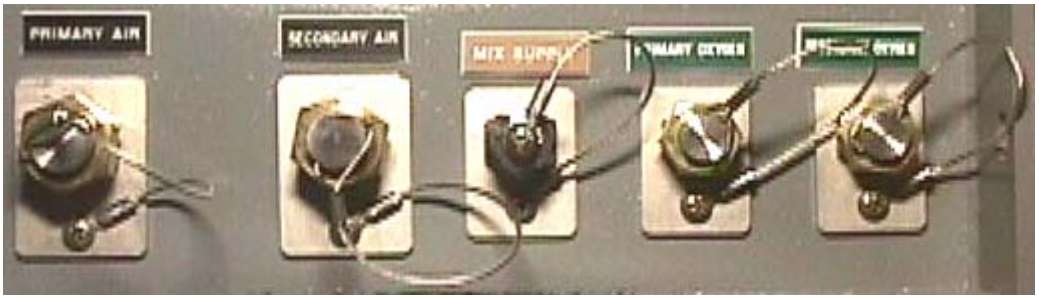

Figure 3-15. External Compressed Gas Supply Connections

The purpose of these connections is to provide additional flexibility by allowing an ASRA, an OSRA, and a HOSRA for mixed gas to be connected to the van simultaneously, and to be positioned around the van as desired based on the available space (see Figure 1-3).

3-2.7 CHAMBER COMMUNICATIONS. The SNDLRCS provides both a primary and a secondary chamber communications system, as described in the following sections.

3-2.7.1 Primary Chamber Communications System. The primary means of two-way communication between the chamber operator and the chamber's occupants is the Amcom® II Chamber Communicator, shown in Figure 3-16.

Figure 3-16. Double-Lock Chamber Communicator

Downloaded from http://www.everyspec.com

This unit has the following features:

- Two modes of operation: simple intercom type and/or duplex type
- AC power with battery backup and automatic charging
- External 12-volt dc connection
- Noise canceling hand-held push-to-talk microphone
- Separate volume controls for the operator and for each lock
- Separate on/off controls for each lock

3-2.7.2 Secondary Chamber Communications System. A standard U.S. Navy sound-powered phone (see Figure 3-17) provides backup communications capability between the chamber operator and the chamber occupants in case the Amcom® II Chamber Communicator, the primary communications system, fails.

Figure 3-17. Interior Communications Panel

3-2.8 OXYGEN (O_2) ANALYZER. The SNDLRCS is equipped with an Analox® Mini O2 DII portable oxygen analyzer (see Figure 3-18) that monitors oxygen levels in the chamber. The unit is designed to measure oxygen levels in the range 0.1% – 100% O_2.

The Mini O2 DII is water resistant to IP 65/ NEMA 4 and drop tested. It is designed specifically for hostile environmental diving conditions, such as military diving.

The sensor is mounted internally for protection and to eliminate sensor-handling problems, making the unit totally self-contained.

The Mini O2 DII is supplied with a multi-function HP flow adaptor that enables Nitrox Tanks with DIN and K valves to be checked without the need for any other special tools or accessories.

NOTE

Humidity levels affect the atmospheric oxygen concentration. Use the chart supplied with the Mini O2 DII to get accurate results.

Downloaded from http://www.everyspec.com

Figure 3-18. Oxygen (O_2) Analyzer (left) and Carbon Dioxide (CO_2) Analyzer

3-2.9 CARBON DIOXIDE (CO_2) ANALYZER. The SNDLRCS is equipped with an Analox® CO_2 Buddy™ carbon dioxide analyzer (see Figure 3-18), which measures CO_2 levels inside the inner lock of the chamber. The unit is designed to measure carbon dioxide levels in the range 0.5% – 5%.

The unit uses an infrared sensor to measure CO_2 levels. Alarms and LED lights on the unit indicate whether CO_2 levels are safe (green light) or dangerous (red light). The alarms are set at the factory, but can be changed by the user with the calibration kit that is provided. The factory settings for the alarms are as follows:

NOTE

To charge and calibrate the carbon dioxide analyzer, 120-volt ac must be available.

a. Less than 0.5% – Green "OK" LED flashes; no audible alarm. Exposure is safe up to eight hours, followed by 16 hours in clean air.

b. 0.5% to 1.5% – Red "Warn" LED flashes; buzzer sounds every two seconds. Exposure should be limited to 15 minutes.

c. 1.5% to 4% – Red "Danger" LED and red "Warn" LED both flash together; buzzer sounds every ½ second. Exposure is potentially fatal; leave immediately.

d. More than 4% – Red "Fatal" LED, red "Danger" LED and red "Warn" LED all flash together; buzzer sounds every ¼ second. Do not enter; unconsciousness is imminent.

Downloaded from http://www.everyspec.com

3-2.10 ENVIRONMENTAL CONTROL SYSTEM (ECS). The SNDLRCS has an Environmental Control System (ECS) that provides temperature and humidity control for the recompression chamber. The limit for cooling with the ECS is 25°F. The high temperature cut-out limit is 110°F.

The ECS is a heat pump-based unit that uses a propylene glycol-based coolant to transfer heat from or to the inner lock of the recompression chamber. The heat pump unit is a 220-volt, single phase R-134 unit that is powered from the breaker panel within the SNDLRCS van.

The heat pump heats or cools the circulating coolant, which consists of a mixture of 50% propylene glycol and 50% water. This mixture is circulated into the recompression chamber's inner lock.

Within the inner lock is a heat exchanger and fan unit that uses a 24-volt dc fan to circulate cooled or heated air, as needed, within the chamber to maintain the desired temperature within the inner lock. The heat exchanger has both a local and a remote switch to control the fan.

3-2.11 BUILT-IN BREATHING SYSTEM (BIBS). The SNDLRCS is equipped with a Built-In Breathing System (BIBS) that is capable of supporting air, oxygen or mixed gas inside the chamber. The purpose of the BIBS is to supply air, oxygen or mixed gas as required to support operation. The BIBS completely separates the diver's breathing supply (oxygen, air, or mixed gas) and diver's exhaust from the chamber environment.

The BIBS has the following features:

a. The BIBS system eliminates oxygen and carbon dioxide buildup and contamination of the chamber environment by containing the breathing supply and exhaust from the chamber environment and by dumping exhaled gases outside of the chamber pressure boundary.

b. The BIBS oxygen is supplied either by T-bottles located inside the SNDLRCS van, or by an external source, such as K-bottles or certified oxygen racks. Examples of certified oxygen racks are an OSRA and a TRCS Chamber Air and Oxygen System (CAOS). The ASRA supplies the BIBS air. If mixed gas is being used, a HOSRA or other certified mixed gas source supplies the BIBS mixed gas.

c. Air, oxygen and mixed gas are supplied from their sources to the SNDLRCS chamber by hoses.

d. Regulation of the oxygen supply pressure is controlled on the oxygen reducing station. Regulation of the air supply pressure is controlled on the air reducing station. Regulation of the mixed gas supply pressure is controlled on the HOSRA.

e. Oxygen BIBS is used during surface decompression and in the treatment of decompression sickness and arterial gas embolism.

f. Individual valves (OLP-V-2 and OLP-V-4) mounted on the console control the primary and secondary oxygen supplies to the BIBS. Pressure relief valves (OLP-V-1 and OLP-V-3) located within the console and set to 200 psi are provided to prevent overpressurization. Two additional valves (OLP-V-6 and OLP-V-8) below the console are also provided for final isolation prior to the oxygen supply penetrating the chamber hull.

g. Inside the inner lock, a check valve (OLP-V-12) is provided as a backflow preventer in the event of an upstream failure of the oxygen supply (see Figure 3-19). Similarly, in the outer lock, a check valve (OLP-V-9) is provided. From these check valves, the supplied oxygen passes to manifolds, which can connect the BIBS masks via quick disconnects.

Downloaded from http://www.everyspec.com

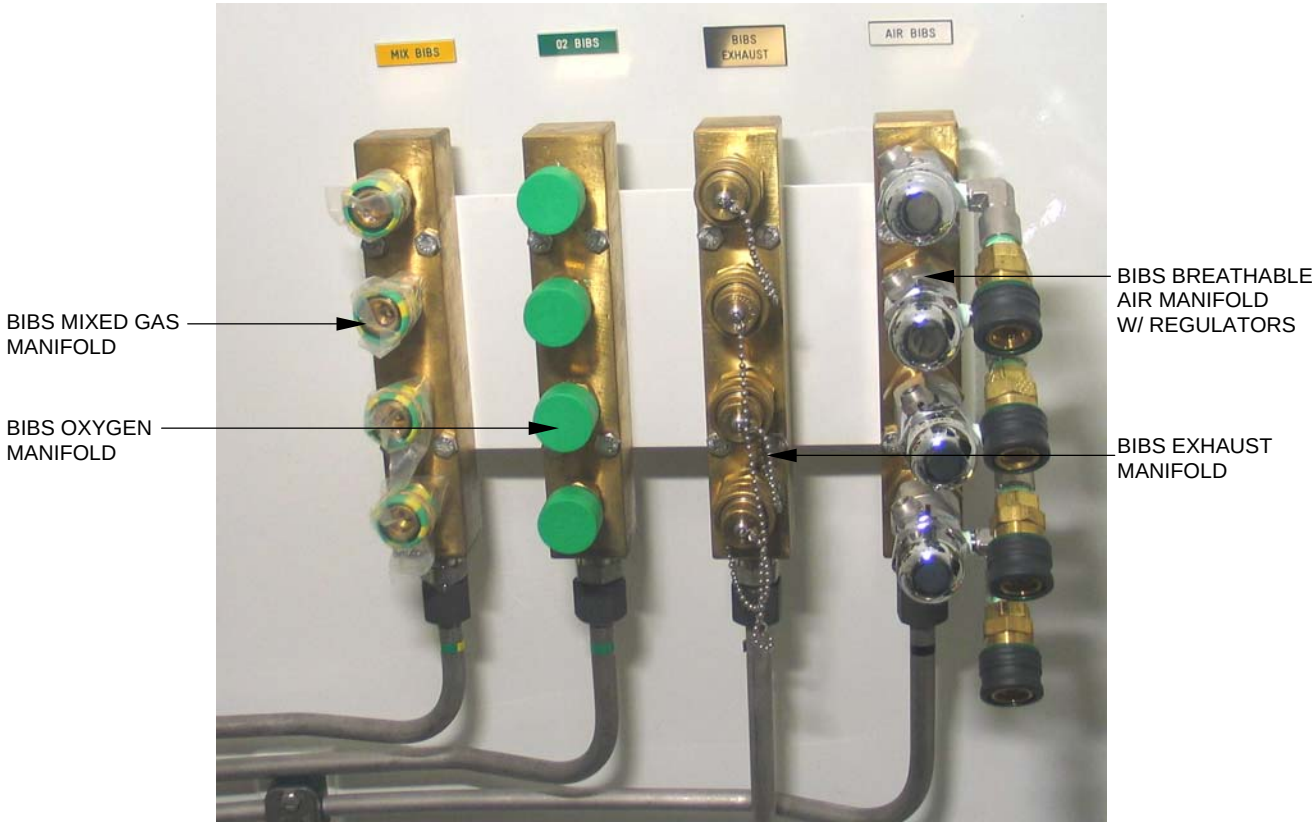

Figure 3-19. BIBS Manifolds (Inner Lock)

h. Air BIBS is used in the event of a contaminated atmosphere inside the chamber or in the event of CO_2 scrubber failure. Air is normally supplied to the BIBS by the secondary air supply system; however, the primary air supply system can be cross-connected to supply the BIBS. Inside the chamber, the air supplied to the BIBS air manifolds for the inner lock and outer lock is first passed through check valves (ALP-V-12 and ALP-V-16, respectively) to maintain chamber pressure by preventing any backflow to outside the chamber. From the check valves, the BIBS air supply is fed to the BIBS air manifolds. Regulators are installed between the manifolds and each disconnect to regulate the air to the appropriate supply pressure.

WARNING

Do not operate BIBS Exhaust Back Pressure Regulator (BPR) Bypass Valve (EXH-V-1 or EXH-V-3) deeper than 60 fsw. If BIBS Exhaust BPR fails at depths greater than 60 fsw, disconnect BIBS Mask Exhaust hose from BIBS Exhaust Manifold and exhaust to chamber atmosphere. Operation at depths greater than 60 fsw can cause pressure fluctuations at the diver's BIBS mask and place the diver at risk of high differential pressure, causing embolisms.

i. BIBS Exhaust Back Pressure Regulators (BPR) (EXH-R-1 and EXH-R-2) (see Figure 3-20) are installed to regulate exhaust pressure within the BIBS exhaust header to approximately –10 psi below chamber ambient pressure to assist in a comfortable BIBS mask exhaust at deep depths down to 225 fsw. BIBS Exhaust BPR Bypass Valves (EXH-V-1 and EXH-V-3) are installed to

Downloaded from http://www.everyspec.com

provide an exhaust path in case the BIBS Exhaust BPR fails shut and to ease BIBS exhaust header back pressure when breathing BIBS at depths shallower than 20 fsw.

Figure 3-20. BIBS Exhaust Back Pressure Regulator

3-2.12 CO_2 SCRUBBER ASSEMBLY. The SNDLRCS is equipped with a CO_2 scrubber assembly (see Figure 3-21) powered by a 24-volt dc fan. The CO_2 scrubber is an open loop system consisting of a housing containing a 24-volt fan and a removable scrubber element. Ambient air is drawn through a 24-volt fan and passed through a CO_2 absorbent bed. The CO_2 scrubber bed contains an absorbent material that lowers the CO_2 concentration in the chamber air. The CO_2 scrubber bed is removable and can fit through the medical lock for servicing during chamber operation. The operational duration of a single canister is approximately six hours.

Figure 3-21. Carbon Dioxide (CO_2) Scrubber Assembly

Downloaded from http://www.everyspec.com

3-2.13 ADDITIONAL SUPPORT EQUIPMENT. The SNDLRCS includes the following additional support equipment:

- An HP 5000-psi air compressor can be used to supply air to charge the ASRA to support chamber operations.
- An OSRA can be used to supply oxygen to the oxygen-reducing station for oxygen breathing.
- A HOSRA can be used to supply mixed-gas breathing.
- A NATO mating ring can be attached to the SNDLRCS for mating with a Transportable Recompression Chamber System (TRCS).
- A generator can be used to supply power when no other source of electricity is available.

3-2.13.1 Air Compressor. Normally a diesel engine-driven, HP, 5000-psi air compressor is used to support charging requirements for the rack assembly being used. However, electric motor-driven compressors can be used when the electricity being supplied is 40 kW or greater.

No specific air compressor is recommended. Use any ANU (Approved for Navy Use) HP air compressor with an approved desiccant tower type purification system that fits the power requirements specified in this section.

3-2.13.2 OSRA and HOSRA. An OSRA is an alternate source of oxygen for the Built-In Breathing System (BIBS). If mixed gas is being used, a HOSRA or other certified mixed gas source supplies the BIBS mixed gas.

OSRAs and HOSRAs do not have U.S. Navy part numbers. They must be built according to the applicable Naval Sea Systems Command (NAVSEA) drawings. The primary NAVSEA drawing numbers for the OSRA and HOSRA are as follows:

- OSRA – 53711-6962045
- HOSRA – 53711-6962046

3-2.13.3 NATO Mating Ring. Using a NATO mating ring to attach the SNDLRCS to the chamber of a TRCS can expand the recompression capability of the SNDLRCS.

NATO mating rings are kept at the Emergency Ship Salvage Material (ESSM) base at Cheatham Annex, Williamsburg, VA. Contact NAVSEA 00C3 to arrange for their use.

3-2.13.4 Generator. If no land-based or shipboard power is available, a generator can be used to supply power to the SNDLRCS. The minimum power requirement is 10 kW, although 20 kW is recommended.

Also, if an electric motor-driven air compressor is being used, the generator must supply the additional power that is required to support that air compressor.

Downloaded from http://www.everyspec.com

CHAPTER 4

SCHEDULED MAINTENANCE

4-1 INTRODUCTION.

NOTE

Properly performed maintenance by qualified personnel is an essential prerequisite to safe and dependable diving operation of the Standard Navy Double-Lock Recompression Chamber System (SNDLRCS).

This chapter contains the information needed to perform scheduled maintenance on the SNDLRCS, including information about the Planned Maintenance System (PMS), general maintenance instructions, scheduled maintenance requirements, and the overhaul/maintenance concept.

4-1.1 PURPOSE. The SNDLRCS is a Naval Sea Systems Command (NAVSEA) configuration-controlled, certified diving system. A primary function of any diving system is to provide safe, reliable life support necessary for mission requirements. This is achieved by the use of a system configuration control process. The objective of this process is to verify that a Diver Life Support System (DLSS) provides acceptable levels of personnel safety throughout the specified operating range and life of the system when used in accordance with approved operation and maintenance procedures. The maintenance procedures presented are necessary to ensure that the SNDLRCS maintains acceptable levels of operational readiness, system configuration control, and certification.

Properly performed scheduled maintenance will reduce equipment failures, ensure continued satisfactory performance, and guarantee satisfactory follow-on certification inspections of the SNDLRCS. This chapter provides information to assist supervisors, maintenance technicians, and diving personnel in planning and scheduling maintenance actions.

4-1.2 SCOPE. The SNDLRCS is a certified diving system and must be maintained in accordance with certification requirements. The scope of certification (SOC) for the system is defined in NAVSEA Drawing Number 592-7317710 and shown in Figure 4-1. The accomplishment of maintenance on certified equipment requires strict adherence to the control and procedures outlined in the *U.S. Navy Diving and Manned Hyperbaric Systems Safety Certification Manual*, SS521-AA-MAN-010 and *Continuation of Certification Handbook for U.S. Navy Diving Systems*, SS521-AB-HBK-010. All planned maintenance conducted on the system, within the certification boundaries, shall be accomplished using only approved maintenance procedures.

When performing scheduled maintenance on components within the equipment's certification boundaries, the following guidelines apply:

- This maintenance involves certified equipment. Therefore, applicable certification procedures, including Reentry Control (REC) procedures, must be followed.
- For the purpose of sustaining system certification, use only renewable parts listed in the "Tools, Parts, Materials, Test Equipment" block of the Maintenance Requirement Cards (MRCs) of the Planned Maintenance System (PMS).

Downloaded from http://www.everyspec.com

General maintenance procedures are provided in this manual and also in applicable PMS Maintenance Index Pages (MIPs) and MRCs.

This chapter includes scheduled maintenance, the PMS, maintenance requirements, general safety and environmental precautions, and maintenance concepts.

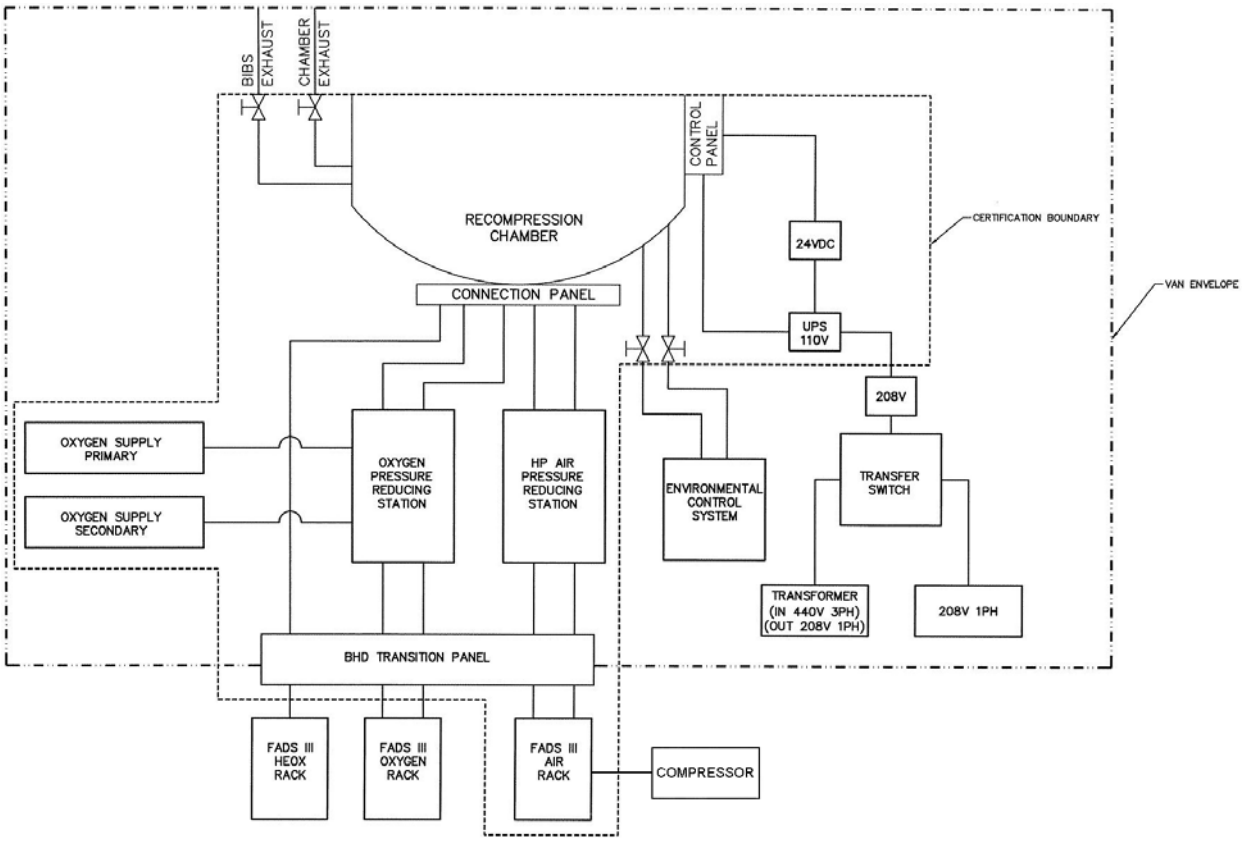

Figure 4-1. Scope of Certification (SOC) Boundary

4-1.3 ARRANGEMENT. This chapter presents preventive maintenance information and requirements as follows:

- Planned Maintenance System (PMS)
- General Maintenance Instructions
- Scheduled Maintenance Requirements
- Overhaul/Maintenance Concept

4-1.4 MAINTENANCE CONTROL. Organizational level maintenance is guided by PMS. Component removal from the air and oxygen systems must be accomplished in accordance with U.S. Navy REC procedures. REC is introduced in paragraph 4-3.1.

4-2 PLANNED MAINTENANCE SYSTEM (PMS).

The scheduled maintenance instructions in this manual are intended to complement the procedures furnished in the PMS documentation. In case of conflicts, the PMS documentation takes precedence.

Downloaded from http://www.everyspec.com

Such conflicts and maintenance procedure discrepancies in this manual or the PMS should be reported immediately to NAVSEA 00C in accordance with the instructions in the Foreword of this manual. PMS for the SNDLRCS is covered by SYSCOM Maintenance Index Page (MIP) Control Number 5921/020.

4-3 GENERAL MAINTENANCE INSTRUCTIONS.

4-3.1 REENTRY CONTROL (REC). The repair work, testing, REC procedures, and qualifications of personnel shall be as required by the *U.S. Navy Diving and Manned Hyperbaric Systems Safety Certification Manual*, SS521-AA-MAN-010 and NAVSEA letter 3151 Ser 00C/4225, dated 23 Oct 1996, *Standardized Diver Reentry Control (REC) Program*. Repairs and maintenance shall be performed and inspected by qualified and responsible personnel, and shall be recorded in a way that:

- Defines the boundaries of the work performed.
- Specifies the nature of the work performed.
- Defines the post repair testing and cleaning performed (if pertinent).
- Records information attesting to the suitability of the materials used.
- Records the signatures and printed name of those performing, inspecting, testing, and approving work. All signatures shall be dated at the time the individual performs the task.

For more information about REC, see sections 6-4 and 6-4.2.

4-3.2 TEST EQUIPMENT, TOOLS, AND CONSUMABLE SUPPLIES. Necessary test equipment, tools and consumable supplies are listed on the appropriate Maintenance Requirement Cards (MRCs).

4-3.3 DISASSEMBLY AND REPLACEMENT OF PARTS.

DANGERS

Do not disassemble diving system components while a breathing gas circuit is pressurized. Failure to depressurize the system may result in damage to equipment, or injury or death to personnel.

Repair or replace worn or damaged components immediately with authorized replacement components. Failure of equipment during operation may result in injury or death to personnel.

Equipment should be disassembled only to the extent necessary for a scheduled maintenance, cleaning, inspection and repair. Maintenance procedures authorized at the user-unit organizational level are specified in the MRCs. Use only authorized replacement parts.

4-3.4 CLEANLINESS.

DANGER

Cleanliness is imperative in handling and maintaining oxygen or mixed gas systems. All tools and parts must be kept free of oil, grease, rust, or other contamination. Foreign substances within an assembly

Downloaded from http://www.everyspec.com

may result in equipment failure, explosion, fire, and possible injury or death to the diver.

Cleaning of the breathing gas system shall be performed in accordance with MIL-STD-1330 for oxygen and mixed gas and MIL-STD-1622 for air.

4-3.4.1 Precleaning and Leak-Check Solution.

CAUTION

Components cleaned with Navy Oxygen Cleaner (NOC) shall be rinsed off prior to the NOC drying. Deposits resulting from the drying of NOC are very difficult to remove.

Nonionic detergent (NID), General Purpose, Type I is used as a precleaning solution. NID solution is prepared by mixing one teaspoon of detergent with one gallon of warm, fresh water. NID solution may also be used as a leak-check solution.

4-3.4.2 NOC Cleaning. NOC is the only solution authorized for final cleaning. Do not use trisodium phosphate (TSP) to clean aluminum components.

4-3.5 LUBRICANTS. Use only the lubricant authorized by the MRC. Apply lubricant sparingly.

4-3.6 PAINTING. To protect flasks from ultra violet (UV) light penetration, use Cardinal Paint Number 6409-16440-UV, Light Gray No. 16440, IAW FED-STD-595, and a disposable sponge type brush. Touch up any exposed flask covering. The SNDLRCS chamber interior paint is a white polyurethane epoxy used for enhancing lighting and is not intended as preservation of the stainless steel hull. The chamber interior paint shall not be touched up or repainted.

4-4 SCHEDULED MAINTENANCE REQUIREMENTS.

To ensure reliable operation and continued certification of the SNDLRCS, preventive maintenance and performance tests are accomplished on a scheduled or situation-related basis. If scheduled maintenance requires component removal (e.g., gauge calibration), use of REC procedures and forms are mandatory. Maintenance procedures not performed during startup or shutdown procedures are contained in the PMS MRCs. MRCs are furnished separately as part of the PMS package. The maintenance index pages (MIPs) list the requirements specified by the MRCs for each item of equipment, including the periodicity code for the required maintenance.

4-4.1 MAINTENANCE INDEX PAGE (MIP). A MIP is an index listing of a set of MRCs that apply to a major assembly of the SNDLRCS. Each MIP includes:

- Identification of the subcomponent.
- A title which identifies the MRC set.
- Reference publications.
- Configuration data for the equipment.
- NAVSEA System Command (SYSCOM) maintenance requirement card control number and periodicity code.

Downloaded from http://www.everyspec.com

- All maintenance requirements (task description) for a given system, subcomponent, or equipment.
- Indication of which MRCs include one or more tests.
- Recommended rates (job codes), estimated man-hours, and a periodicity code for related maintenance.

4-4.2 MAINTENANCE REQUIREMENT CARDS (MRCs). MRCs provide detailed procedures for performing required scheduled maintenance on the SNDLRCS. MRCs include the following:

- A brief description of the task
- A periodicity code
- Recommended rates (job codes), total man-hours and elapsed time
- Required safety precautions
- REC procedure applicability
- Required tools, parts, materials and test equipment
- Detailed step-by-step procedures

4-4.3 PARTS AVAILABILITY. Prior to stowage and on a quarterly basis, maintenance parts kept for the SNDLRCS shall be inspected for shelf-life criteria, inactive equipment maintenance, and usability.

4-5 OVERHAUL/MAINTENANCE CONCEPT.

The maintenance plan for the SNDLRCS provides the unit level commander maximum flexibility in the conduct of maintenance actions required to keep the SNDLRCS at the highest state of operational readiness.

Major elements of the plan include:

a. The Planned Maintenance System (PMS), which provides for maintenance actions to be conducted at pre-planned scheduled intervals.

b. See Chapter 5 for troubleshooting guidance. Chapter 6 contains detailed corrective (repair) maintenance procedures, providing the unit commander and the chain of command with detailed procedures necessary to conduct corrective maintenance to the SNDLRCS that are not covered under the planned maintenance system.

c. Various planned and corrective maintenance actions due to their direct impact on system safety are required to be conducted under REC procedures.

d. There is no requirement for conducting a full overhaul of the SNDLRCS during its life cycle, provided the planned and corrective maintenance procedures contained in the MIPs and herein are followed.

Downloaded from http://www.everyspec.com

THIS PAGE INTENTIONALLY LEFT BLANK

Downloaded from http://www.everyspec.com

CHAPTER 5

TROUBLESHOOTING

5-1 INTRODUCTION.

This chapter provides information for identifying, locating, and providing initial corrective action for the possible causes of equipment malfunction in the Standard Navy Double-Lock Recompression Chamber System (SNDLRCS). The troubleshooting guide is NOT to be used during operation of the SNDLRCS. During operation of the SNDLRCS, the Operating Procedures (OPs) and Emergency Procedures (EPs) in Appendices A and B provide the operator with guidance for troubleshooting and correcting problems to the systems. The following components and subsystems are discussed:

- Electrical Power Systems
- Lighting System Components
- SNDLRCS Van Heat and Air Conditioning Units
- Oxygen (O_2) Analyzer
- Carbon Dioxide (CO_2) Analyzer
- Recompression Chamber Valves, Piping and Pressure Vessel
- Gauges
- Chamber Communications System
- Environmental Control System (ECS) Components
- Oxygen Supply System
- High-Pressure (HP) Oxygen Storage Rack
- Built-In Breathing System (BIBS) Mask Breathable Gas and Exhaust System

The following support equipment may be used during operation of the SNDLRCS. These are stand-alone components with their own technical manuals and operating procedures. For these components the equipment technical manuals are referenced.

- *Fly Away Dive System (FADS) III Air System Technical Manual*, S9592-B1-MMO-010
- *High Pressure Air Compressor, Model 74628MD, Commercial Off-the-Shelf (COTS) Manual*, S9592-B9-MMC-010
- 10-, 20-, or 40-kW Diesel Generator; refer to component technical manual.

5-2 TROUBLESHOOTING PROCEDURES.

Troubleshooting procedures are presented in tabular format. Prior to performing any troubleshooting procedure or corrective actions, investigate the most probable cause. In most instances, the cause of the failure will be an incorrect valve or electrical lineup or other easily corrected problem. The tables provide fault isolation and corrective actions for restoring equipment to operational readiness. The tables list the symptom of the malfunction, the probable cause, and the corrective action.

5-3 CORRECTIVE MAINTENANCE PROCEDURES.

Corrective maintenance may be necessary if equipment failure or performance degradation occurs. When corrective action is required, the procedure in Chapter 6 is referenced in the troubleshooting tables.

Downloaded from http://www.everyspec.com

5-4 REFERENCE PUBLICATIONS.

Refer to the publications listed in Table 1-2 for additional troubleshooting and corrective maintenance information.

5-5 FAILURE ANALYSIS REPORTING.

To maintain Naval Sea Systems Command (NAVSEA) system certification, submit accurate, timely Failure Analysis Reports (FARs) via http://www.supsalv.org under 00C3 Diving, within the Diver Support menu.

5-6 TROUBLESHOOTING INDEX.

Table 5-1. Troubleshooting Index

Table	Equipment	Page
5-2	Electrical Power Systems	5-3
5-3	Lighting System Components	5-3
5-4	Heating and Air Conditioning Units	5-4
5-5	Analox Mini O2 DII Portable Oxygen (O_2) Analyzer	5-4
5-6	Analox CO_2 Buddy™ Sensor Lights and Audible Alarm Indications and Meanings	5-5
5-7	Valves, Piping and Pressure Vessel	5-6
5-8	Gauges	5-8
5-9	Chamber Communications System	5-9
5-10	Environmental Control System (ECS) Components	5-10
5-11	Oxygen (O_2) Supply System	5-11
5-12	HP Oxygen (O_2) Storage Rack	5-12
5-13	BIBS Mask Breathable Gas and Exhaust System	5-12

Downloaded from http://www.everyspec.com

5-7 TROUBLESHOOTING TABLES.

Table 5-2. Electrical Power Systems

Symptom	Probable Cause	Corrective Action
1. No electrical power or incorrect voltage to SNDLRCS van.	a. Improper connections of power supply cable.	a. Verify that power cable (either 220 or 440 volts) is properly connected to van connector plugs.
	b. Improper ground connection.	b. Verify and repair ground connection as needed.
	c. Improper operation of generator/low generator voltage.	c. Verify generator output and connection to proper receptacle. Verify phase rotation. Ensure that generator is adequately sized for operation (see Table 2-5).
	d. Loss of power to the power cord.	d. Verify that power cord supply breaker from host vessel or shore power is not tripped.
	e. Manual bus transfer (MBT) switch not properly set to power source.	e. Verify and reset MBT to appropriate power source.
	f. Input or component breaker tripped.	f. Verify that power panel breakers are properly aligned for operation.
	g. Power not available at electrical receptacle.	g. Verify that component breaker is properly set and GFCI not tripped; reset if required. Investigate that electrical circuit is not damaged.
2. 24-volt dc power not available.	a. Uninterruptible Power Supply (UPS) not on.	a. Turn unit on. Verify 24-volt output.
	b. UPS battery low.	b. Charge battery. Verify 24-volt output.
	c. UPS/24-volt wiring	c. Investigate. Repair as necessary.

Table 5-3. Lighting System Components

Symptom	Probable Cause	Corrective Action
1. Lights do not function.	a. Power not available.	a. Verify that power to SNDLRCS is available and correctly connected. Verify that breaker is not tripped.
	b. Light dim or flickers.	b. Ballast bad. Replace fixture or ballast.
	c. Damage to light fixture or wiring.	c. Repair components as required.

Downloaded from http://www.everyspec.com

Table 5-3. Lighting System Components (contd)

Symptom	Probable Cause	Corrective Action
2. Operator station light does not function.	a. Power not available from UPS.	a. Verify that UPS is on line and functioning properly.

Table 5-4. Heating and Air Conditioning Units

Symptom	Probable Cause	Corrective Action
1. HVAC unit does not function.	a. Loss of electrical power.	a. Verify that electrical power is available; reset breaker if required.
	b. Unit does not cool/heat.	b. Verify that outer ductwork door is open and drain plug removed.
	c. Unit inner or outer coil freezes, does not cool/heat properly.	c. Unit low on refrigerant. Service and recharge as required.
2. Poor air flow over coils	a. Heat exchanger coils damaged or flattened.	a. Repair coils to restore air flow.

Table 5-5. Analox Mini O2 DII Portable Oxygen (O_2) Analyzer

Symptom	Probable Cause	Corrective Action
1. Battery symbol is displayed.	a. Battery power is low.	a. Change the battery.
2. Display is off.	a. Switch is off.	a. Turn switch on.
	b. Display and/or battery connection is bad.	b. Check connections for display and battery.
3. Reading is zero (0).	a. Sensor is disconnected.	a. Check sensor connection.
	b. Sensor has expired.	b. Replace sensor.
4. Reading is erratic.	a. Pressure on sensor.	a. Check O_2 flow.
	b. Interference from radio transmission.	b. Move unit away from radio.
	c. Sensor is old or faulty.	c. Replace sensor.
	d. Moisture on sensor.	d. Dry sensor's face.
5. Turning calibration knob does not change reading.	a. Connections are faulty.	a. Check connections.
	b. Sensor has failed.	b. Replace sensor.
6. Missing display segments.	a. Faulty display.	a. Return unit to dealer.
7. Will not calibrate.	a. Faulty sensor.	a. Replace sensor.
	b. Sensor is not in the air.	b. Check the flow adapter.
	c. Unit operating at high altitude.	c. Calculate the percentage equivalent = 20.9% x bar.

Downloaded from http://www.everyspec.com

Table 5-5. Analox Mini O2 DII Portable Oxygen (O_2) Analyzer (contd)

Symptom	Probable Cause	Corrective Action
8. Reading is inconsistent.	a. Temperature is changing rapidly.	a. Allow analyzer to adjust to new temperature before using.

Note: For detailed operating, troubleshooting and repair information, refer to the *Analox Mini O2 DII Portable Oxygen Analyzer Technical Manual*.

Table 5-6. Analox CO_2 Buddy™ Sensor Lights and Audible Alarm Indications and Meanings

Green "OK" LED	Red "Alarm 1" LED	Red "Alarm 2" LED	Red "Alarm 3" LED	Yellow "Fault" LED	Indicates that the ____.
Off	Off	Off	Off	Off	Unit is switched off.*
Blip	Off	Off	Off	Off	Unit is operating normally.
Off	Flashing slow buzzer	Off	Off	Off	CO_2 level > 0.5%.
Off	Flashing	Flashing medium buzzer	Off	Off	CO_2 level > 1.5%.
Off	Flashing	Flashing	Flashing fast buzzer	Off	CO_2 level > 4.0%.
Off	Off	Flashing	Off	Flashing medium buzzer	Detector signal out of limits.**
Off	Flashing	Flashing	Flashing	Flashing very fast buzzer	IR source 'Fault'.**
Off	Off	Off	Off	Flashing slow buzzer	Calibration Error.** (Occurs immediately after unit is switched on.)
Blip	Any	Any	Any	Blip buzzer bleep	Battery level low warning.
Off	Any	Any	Any	Flashing fast buzzer	Auto switch off in progress.

* Once the unit is switched on, it will not shut down. Return the unit to the charger.

** In fault status, the buzzer will sound for 1 minute only; after 1 minute, only the visual alarm will operate.

Note: For detailed operating, troubleshooting and repair information, refer to the *Analox CO_2 Buddy™ Carbon Dioxide Analyzer User Manual*.

Downloaded from http://www.everyspec.com

Table 5-7. Valves, Piping and Pressure Vessel

Symptom	Probable Cause	Corrective Action
1. Globe, Whitey (needle/plug) type and globe isolation calibration valve: All malfunctions.	a. Valve leaking due to defective stem seal or stem.	For all cases remove and replace the valve software.
	b. Valve leaking at bonnet due to defective O-ring, or backup ring.	
	c. Valve leaking when closed due to defective O-ring or valve seat.	
2. Check valve leaks by.	a. Defective O-rings, valve seat or spring.	a. Remove and replace check valve.
3. Relief valve leaks by or prematurely opens at low-pressure (LP).	a. Defective valve seat/quad ring or improper setting.	a. Remove and replace the relief valve software.
4. Sound of gas leaking or decrease in chamber pressure.	a. Gas leaking.	a. Attempt to maintain depth by use of pressurization control or execute Emergency Procedure-1 (EP-1) in Appendix B if directed by the dive supervisor.
		b. If possible, isolate leak by shutting appropriate pressure vessel hull valve (e.g. relief valve, isolation valve, depth gauge isolation valve, air supply bottle stop, etc.)
		c. Visually and audibly try to isolate the leak. Leak may be identified by coating suspected leak areas with leak detection fluid or nonionic detergent/ water solution and watching for bubbles, indicating leak location.

Downloaded from http://www.everyspec.com

Table 5-7. Valves, Piping and Pressure Vessel (contd)

Symptom	Probable Cause	Corrective Action
4. Sound of gas leaking or decrease in chamber pressure. (contd)	a. Gas leaking. (contd)	d. When operations can be secured, surface chamber and repair or replace component(s) as necessary. See Chapter 6.
5. Leaks; slow air loss from control console assembly.	a. O-ring failure.	a. Remove, discard and replace O-ring.
	b. Loose fittings.	b. Tighten fittings.
	c. Cracked weld.	c. Local repair.
6. No gas flow indication.	a. Improper valve lineup.	a. Check valve lineup per approved operating procedures and correct as necessary.
	b. Faulty regulator.	b. Check outlet pressure of regulator. Repair or replace pressure regulator.
	c. Faulty pressure gauge.	c. Check gauge per Table 5-8. Remove and replace gauge with certified calibrated gauge.
7. Supply selector valve unable to select or shut off secondary or primary air supply	a. Handle broken.	a. Remove and replace handle.
	b. Internal packing failure.	b. Remove and replace the valve software.
8. Gauge indicates improper system pressure.	a. Incorrect valve lineup.	a. Verify gauge valve lineup; correct as required.
	b. Bourdon tube clogged or failed	b. Crosscheck with other gauges; remove and replace gauge if necessary.
9. Air isolation valve unable to isolate airflow to system component.	a. Debris buildup on valve seat.	a. Remove and replace valve.
	b. Internal packing failure	b. Remove and replace valve.

Downloaded from http://www.everyspec.com

Table 5-7. Valves, Piping and Pressure Vessel (contd)

Symptom	Probable Cause	Corrective Action
10. Leaks or air loss from system relief valve.	a. Improper relief valve setting.	a. Remove, test, reset, and reinstall relief valve.
	b. Contamination build-up on relief valve internal seat.	b. Remove and replace relief valve.
	c. Internal failure.	c. Remove and replace relief valve.
11. Air pressure not controllable downstream of regulator valve.	a. Internal failure of valve regulator	a. Remove and replace regulator.
12. Check valve allows air to backflow into console.	a. Internal spring break.	a. Remove, repair or replace valve.
	b. Check valve jammed open.	b. Remove, repair or replace valve.
13. Low flow through filter element.	a. Filter clogged with dirt or other material.	a. Remove, service or replace filter element.

Table 5-8. Gauges

Symptom	Probable Cause	Corrective Action
1. Needle does not return to zero.	a. Valve lineup not correct.	a. Verify and correct valve lineup.
	b. Gauge partially pressurized.	b. Verify gauge is not pressurized. Depressurize gauge.
	c. Faulty gauge.	c. Compare with indication of certified calibrated gauge. Remove and replace with certified calibrated gauge.
2. Faulty reading.	a. Gauge in need of calibration.	a. Where possible, compare suspected gauge to a certified calibrated gauge. Remove gauge for servicing and calibration at an approved facility. See Chapter 6.
		b. Check chamber air or oxygen supply/exhaust system components. Take corrective actions as necessary per Chapter 6.

Downloaded from http://www.everyspec.com

Table 5-9. Chamber Communications System

Symptom	Probable Cause	Corrective Action
1. Chamber Communications System not operational.	a. UPS power not available.	a. Verify that UPS system energized and functioning.
	b. Power OFF/ON not in ON position.	b. Place OFF/ON switch in ON position.
	c. Faulty electrical wiring or connections.	c. Examine electrical wiring and connections. Use multimeter to determine continuity. Repair or replace as needed.
	d. Dirty or corroded battery terminals.	d. Examine battery terminals for dirt and corrosion. Clean battery terminals.
2. Low volume.	a. Low battery.	a. Check battery indicator light. Indicator light should be solid. Replace battery if indicator light is not solid and check battery connection.
3. Garbled voice to diver or operator.	a. Volume set too high.	a. Check volume setting at diver and operator stations. Turn down volume.
	b. Diver's earphones corroded or defective.	b. Examine diver's earphones for corrosion. Replace with earphone known to be good and check function. If the good earphone functions properly, diver's earphone in question is defective. Replace diver's earphones.
	c. Diver's/operator's microphone corroded or defective.	c. Examine operator's microphone for corrosion. Replace with microphone known to be good and check function. If the good microphone functions properly, operator's microphone in question is defective. Replace operator's microphone.
	d. Corroded or defective diver's/operator's microphone.	d. Examine diver's microphone for corrosion. Replace with microphone known to be good and check function. If the good microphone functions properly, diver's microphone in question is defective. Replace diver's microphone.

Downloaded from http://www.everyspec.com

Table 5-9. Chamber Communications System (contd)

Symptom	Probable Cause	Corrective Action
4. Communication cuts out.	a. Corroded or defective diver's/operator's microphone.	a. Examine diver's microphone for corrosion. Replace with microphone known to be good and check function. If the good microphone functions properly, diver's microphone in question is defective. Replace diver's microphone.
	b. Corroded or defective diver's/operator's headset.	b. Examine operator's headset for corrosion. Replace with headset known to be good and check function. If the good headset functions properly, operator's headset in question is defective. Replace operator's headset.

Table 5-10. Environmental Control System (ECS) Components

Symptom	Probable Cause	Corrective Action
1. Unit does not operate.	a. Tripped circuit breaker.	a. Reset circuit breaker.
	b. Defective circuit breaker.	b. Replace circuit breaker.
2. Unit does not cool/heat properly.	a. No airflow across heat exchanger.	a. Verify that heat exchanger exhaust port in cargo door is open.
3. ECS heat exchanger fan does not operate.	a. 24-volt dc power not available.	a. Verify that the UPS is properly energized and power is available to heat exchanger fan.
	b. Fan damaged/inoperable.	b. Replace fan.
4. ECS coolant pump not functioning. (Coolant flow indicator not turning.)	a. Coolant not circulating.	a. Check coolant level.; verify that coolant temperature is proper for heating or cooling.
	b. Defective pump motor fuses.	b. Replace fuses.
5. Unit does not cool.	a. Heat/Cool switch improperly set.	a. Verify that toggle switch is set to cool position.
	b. Coolant (propylene glycol/ water mixture) level low.	b. Check coolant level, it should be in upper sight glass; replenish coolant as necessary.
6. Unit does not heat	a. Heat/cool switch improperly set.	a. Verify that toggle switch is set to heat position.

Downloaded from http://www.everyspec.com

Table 5-10. Environmental Control System (ECS) Components (contd)

Symptom	Probable Cause	Corrective Action
7. Compressor will not start.	a. 220-volt power not available.	a. Verify electrical lineup, breaker position, and power to van.
	b. Refrigerant (R134a) charge low.	b. Refrigerant charge low; recharge as necessary.

Table 5-11. Oxygen (O_2) Supply System

Symptom	Probable Cause	Corrective Action
1. No oxygen pressure.	a. Improper valve lineup.	a. Verify valve lineup per approved operating procedure.
	b. Malfunction or failure of oxygen pressure regulator.	b. Check regulator for proper operation. Repair or replace pressure regulator.
	c. Pipe connections leaking.	c. Check for pipe leaks and repair as necessary.
	d. Defective or empty oxygen cylinder or leaking cylinder connections.	d. Check for system failures, malfunctions, leaks in system; identify, isolate. Adjust or repair as necessary.
	e. Inoperative or malfunctioning oxygen BIBS supply pressure gauge.	e. Compare with indication of certified, calibrated gauge. Remove and replace gauge.
2. Low oxygen pressure (less than 75 psig).	a. Low pressure from oxygen supply rack.	a. Check for low oxygen cylinder pressure, and improper valve lineup. Correct as required.
	b. Regulator not set to proper pressure.	b. Check pressure gauge for 75 psig indicator; reset as needed.
	c. Leaks in cylinder piping connections.	c. Check for piping leaks and repair as necessary.
	d. Primary or secondary oxygen supply valve(s) not fully open.	d. Verify valve lineup per approved operating procedure.
	e. Oxygen pressure regulator internal malfunction.	e. Check regulator for proper operation. Repair or replace pressure regulator.
	f. Leakage from pressure regulator inlet or outlet ports.	f. Remove and inspect valve for defects. Repair or replace pressure regulator.

Downloaded from http://www.everyspec.com

Table 5-11. Oxygen (O_2) Supply System (contd)

Symptom	Probable Cause	Corrective Action
2. Low oxygen pressure (less than 75 psig). (contd)	g. Gauge out of calibration.	g. Compare with indication of certified, calibrated gauge. Remove and replace gauge.
	h. Control panel oxygen supply valve(s) not fully open.	h. Verify valve lineup per approved operating procedures.
3. Oxygen pressure too high (greater than 75 psig).	a. Defective oxygen pressure regulator.	a. Back off on the adjusting handle of regulator and attempt to adjust pressure to 75 psig. Repair or replace pressure regulator as necessary.
	b. Pressure gauge out of calibration.	b. Compare with indication of certified, calibrated gauge. Remove and replace gauge.
4. Leakage (other than during filling).	a. Loosely installed components.	a. Check torque values.
	b. Damaged O-ring(s).	b. Remove and replace damaged O-ring(s).
	c. Damaged Teflon® seat on hose.	c. Remove and replace damage seat.
5. Leakage (during filling).	a. Damaged hose.	a. Remove and replace hose assembly.

Table 5-12. HP Oxygen (O_2) Storage Rack

Symptom	Probable Cause	Corrective Action
1. No leakage, but pressure gauge shows low or high pressure.	a. Faulty gauge reading.	a. Verify valve lineup as per approved procedure. Cross-check gauges on manifolds. Replace pressure gauge if defective.

Table 5-13. BIBS Mask Breathable Gas and Exhaust System

Symptom	Probable Cause	Corrective Action
1. Leakage at chambers oxygen/air/mixed gas supply BIBS manifold.	a. Loose connection at quick disconnect socket(s).	a. Check connection of supply (1/8”) and exhaust (3/8”) quick disconnect sockets at BIBS manifold. Tighten fittings
	b. Cross-threading of quick disconnect socket(s).	b. Remove and inspect fittings. Replace one or both fittings, as required.
	c. Defective fitting on quick disconnect	c. Remove and inspect fittings. Replace hose assembly.

Downloaded from http://www.everyspec.com

Table 5-13. BIBS Mask Breathable Gas and Exhaust System (contd)

Symptom	Probable Cause	Corrective Action
2. Leakage at connections to one or both mask regulator assemblies.	a. Loose hose fitting at demand regulator.	a. Check fitting connection for tightness. Verify that gasket is securely inserted into the nut on demand hose. Tighten fitting.
	b. Defective gasket.	b. Inspect gasket for nicks, cuts or gouges, and other signs of wear. Replace gasket if damaged.
	c. Loose or damaged hose clamp at exhaust regulator.	c. Check clamp for tightness and proper position on regulator stem. Position and tighten clamp as required.
3. Leakage at mating of regulator assemblies, manifold assembly, and mask assembly.	a. Loose regulator assembly-to-manifold connection or manifold-to-mask connection.	a. Check regulator-to-manifold and mask-to-manifold connections. Tighten connection(s).
	b. Cross-threading of demand or exhaust regulator case threaded connection for manifold.	b. Remove regulator assembly from manifold and inspect threads for cross-threading and burrs. Replace regulator assembly if cross-threading condition exists.
	c. Damaged O-rings.	c. Remove and inspect O-rings for damage, nicks, cuts or gouges. Replace O-rings if defective.
	d. Stem not properly positioned in demand regulator diaphragm stem guide.	d. Remove regulator assembly from manifold. Correctly position stem in guide and reinstall in regulator assembly.
4. Loss of oxygen/air flow to mask assembly.	a. Oxygen/air supply system failure or malfunction.	a. Perform emergency procedures Loss of Oxygen or Loss of Primary Air. If improperly set up, correct valve lineup. Replace pressure regulator for air BIBS manifold. Perform the corrective action as necessary, per Table 5-11 and Table 5-12 in this manual and the Primary/Secondary HP Air Supply System Troubleshooting table in the *Fly Away Dive System (FADS) III Air System Technical Manual*, S9592-B1-MMO-010.

Downloaded from http://www.everyspec.com

Table 5-13. BIBS Mask Breathable Gas and Exhaust System (contd)

Symptom	Probable Cause	Corrective Action
4. Loss of oxygen/air flow to mask assembly. (contd)	b. Open supply (demand) connection at chamber oxygen/air supply BIBS manifold or demand regulator hose.	b. Check connections. Reconnect fittings. (BIBS manifold quick disconnect 1/8" socket, hose connection to regulator case, etc.)
	c. Foreign material lodged in hose stem on regulator.	c. Remove hose from regulator stem; inspect stem. Remove material.
	d. Damaged supply (demand) hose.	d. Remove supply hose and inspect. Replace supply hose.
	e. Crimped supply demand hose.	e. Inspect supply hose for damage. Eliminate crimp by removing hose and straightening. If crimp has resulted in damage to hose, replace hose.
5. High breathing resistance (inhalation).	a. Inlet pressure incorrect.	a. Check for loss of pressure (oxygen/air supply). Correct loss of oxygen/air supply.
	b. Defective or failed demand regulator/regulator "Free Flow" control.	b. Replace demand regulator assembly.
6. High breathing resistance (exhalation).	a. Back pressure too high.	a. Adjust BIBS back pressure regulator as necessary for comfortable breathing.
Note: High breathing resistance is normal when on the surface (14.7 psi) because the back pressure regulator does not work on the surface.	b. Exhalation valve sticking.	b. Don mask and exhale into mask; resistance indicates valve is sticking. Replace exhaust flapper and seat assembly. Replace exhaust regulator assembly.
7. Leakage from outlet port when inlet pressure is less than chamber pressure minus bias pressure.	a. Worn, contaminated, or damaged valve seat and/or internal rings.	a. Repair or replace pressure regulator.
	b. Sensing port is blocked or partially obstructed.	b. Verify valve lineup and ensure that sensing port to exhaust back pressure regulator is not blocked or partially obstructed.

Downloaded from http://www.everyspec.com

Table 5-13. BIBS Mask Breathable Gas and Exhaust System (contd)

Symptom	Probable Cause	Corrective Action
8. Excessive accumulation of pressure or inconsistent bias pressure.	a. Friction due to contamination, wear, and/or dissipation of lubricant grease.	a. Repair or replace pressure regulator.
9. Continuous flow through outlet port.	a. Ruptured diaphragm.	a. Repair or replace pressure regulator.

Downloaded from http://www.everyspec.com

THIS PAGE INTENTIONALLY LEFT BLANK

Downloaded from http://www.everyspec.com

CHAPTER 6

CORRECTIVE MAINTENANCE

6-1 INTRODUCTION.

Corrective maintenance restores a damaged or failed SNDLRCS component to a serviceable condition. It is performed for repairable damage or when referenced by troubleshooting (see Chapter 5). This chapter provides operating and maintenance personnel with safety precautions and corrective maintenance procedures needed to correct performance degradation in various SNDLRCS systems.

NOTES

Properly performed maintenance by qualified personnel is an essential prerequisite to safe and dependable diving operation of the Standard Navy Double-Lock Recompression Chamber System (SNDLRCS).

Prior to performing corrective maintenance procedures, refer to Chapter 4, sections 4-3 through 4-5, which discuss maintenance requirements, general safety and environmental precautions, maintenance concept, and maintenance records.

6-2 GENERAL REPAIR INFORMATION.

DANGERS

Repair or replace worn or damaged components immediately with authorized replacement components. Failure of equipment during operation may result in injury or death to personnel.

Do not disassemble diving system components while system is pressurized. Failure to depressurize the system may result in damage to equipment, or injury or death to personnel.

Although the maintenance concept of the SNDLRCS is based on the methodology of removal and replacement of components, the scope of repairs covered in this chapter provides procedures for removal, inspection and installation of component parts that may be repaired at the user organizational level. These procedures are not intended to replace the Operating Procedures (OPs) or Emergency Procedures (EPs) as presented in Appendices A and B. In addition, where available, the maintenance procedures from the Planned Maintenance System (PMS) will provide detailed instructions for preventive maintenance. Figures and tables provide component listings to classify each component as to its type and to show which removal, replacement, disassembly, and reassembly procedure is to be used. Current Joint Identification Drawings (JIDs) should be referenced for piping runs, flexible hoses and assembly fittings not having deteriorative software.

6-2.1 MAINTENANCE PARTS. Parts location illustrations referenced in Chapter 7 identify the parts affected by the equipment repair procedures.

Downloaded from http://www.everyspec.com

6-3 SAFETY REQUIREMENTS.

Before performing any corrective maintenance on the equipment, personnel shall review and become thoroughly familiar with the general safety notices and precautions listed in the Safety Summary located in the front of this manual. In addition, maintenance shall be performed in compliance with OPNAVINST 5100 Series. Repair or replacement procedures along with their specific warnings and cautions shall be read and understood before beginning corrective maintenance.

NOTE

All replacement parts (hardware/software) for high-pressure (HP) and low-pressure (LP) gas systems (air, mixed gas, oxygen supplies; and air, mixed gas, oxygen exhaust) shall be cleaned to the appropriate standard prior to installation. All air supply components, exhaust systems (air, mixed gas, and oxygen) components, and oxygen supply components shall be cleaned and tested in accordance with MIL-STD-1330D.

6-4 FAILURE ANALYSIS REPORTING (FAR).

The SNDLRCS is a certified Diver Life Support System (DLSS). To maintain system certification and to standardize reporting, tracking, and resolving material failures or deficiencies in a DLSS, a FAR, Naval Sea Systems Command (NAVSEA) form 10560/4 (NSN 0116-LF-105-6020) shall be submitted when:

- Equipment or component malfunctions.
- Unscheduled repairs are performed.
- An unscheduled adjustment is required.
- An equipment deficiency is noted.
- A defective component or spare part is detected.

The *Standardized Diver Reentry Control (REC) Program* is integrated in the FAR submission process. Additional information about FAR can be obtained on the SUPSALV Internet Web site at www.supsalv.org under 00C3 Diving, within the Diver Support menu.

6-5 REENTRY CONTROL (REC).

The repair work, testing, reentry control procedures, and qualifications of personnel shall be as required by *U.S. Navy Diving and Manned Hyperbaric Systems Safety Certification Manual*, SS521-AA-MAN-010 and NAVSEA letter 3151 Ser 00C/4225, dated 23 Oct 96, *Standardized Diver Reentry Control (REC) Program*. Repairs and maintenance shall be:

a. Performed and inspected by qualified and responsible personnel.

b. Recorded in a way that:

   1. Defines the boundaries of the work performed,

   2. Specifies the nature of the work performed,

   3. Defines the post-repair testing and cleaning performed (if pertinent),

   4. Records information attesting to the suitability of the materials used,

Downloaded from http://www.everyspec.com

5. Records the signatures and printed name of those performing, inspecting, testing, and approving work. All signatures shall be dated at the time the individual performs the task

6-6 VALVE IDENTIFICATION, REMOVAL, REPAIR AND REINSTALLATION.

The following sections list the valves found in the SNDLRCS. Valves from the various systems are grouped by model number and size, together with their removal, replacement, and repair and reinstallation procedures.

6-6.1 GAUGE ISOLATION AND TEST VALVES.

DANGER

Do not disassemble components while the HP Air Reducing Station is under pressure. Failure to observe this warning may result in injury or death to personnel.

WARNING

Depressurize and tag the appropriate valves "DO NOT OPERATE" in accordance with PMS procedures prior to performing maintenance on any HP system.

NOTE

The maintenance action for any gauge isolation valves involves entry into a certified boundary and requires a REC procedure.

Located in line with each gauge installed on the SNDLRCS are gauge isolation and test valves. These valves are designed to allow calibration/comparison of the gauge in place without disturbing the gauge fittings. Table 6-1 shows a list of the isolation and test valves, and the removal, repair, and installation procedures.

Table 6-1. Gauge Isolation and Test Valves

Valve Number	Description
AHP-V-103	Primary HP Air Gauge Inlet Isolation Valve
AHP-V-106	Primary HP Air Gauge Outlet Isolation Valve
AHP-V-107	Secondary HP Air Gauge Inlet Isolation Valve
AHP-V-110	Secondary HP Air Gauge Outlet Isolation Valve
ALP-V-2	Primary LP Air Supply Gauge Valve
ALP-V-8	Secondary LP Air Supply Gauge Valve
ATM-V-1	Inner Lock (IL) Primary Depth Gauge Valve
ATM-V-3	IL Secondary Depth Gauge Valve
ATM-V-5	Outer Lock (OL) Primary Depth Gauge Valve
ATM-V-7	OL Secondary Depth Gauge Valve
EV-V-3	Medical Lock Pressure Gauge Isolation Valve
OHP-V-202	Primary HP Oxygen (O_2) Gauge Isolation Valve

Downloaded from http://www.everyspec.com

Table 6–1 . Gauge Isolation and Test Valves (contd)

Valve Number	Description
OHP-V-204	Secondary HP O_2 Gauge Isolation Valve
OLP-V-5	LP O_2 Supply Gauge Valve
OLP-V-207	Secondary LP O_2 Gauge Isolation Valve
OLP-V-208	Primary LP O_2 Gauge Isolation Valve
MLP-V-3	LP Mixed Gas Pressure Gauge Valve

6-6.1.1 Gauge Isolation and Test Valve Removal.

a. Remove tubing connector nuts that secure the valve in the system (see Figure 6-1).

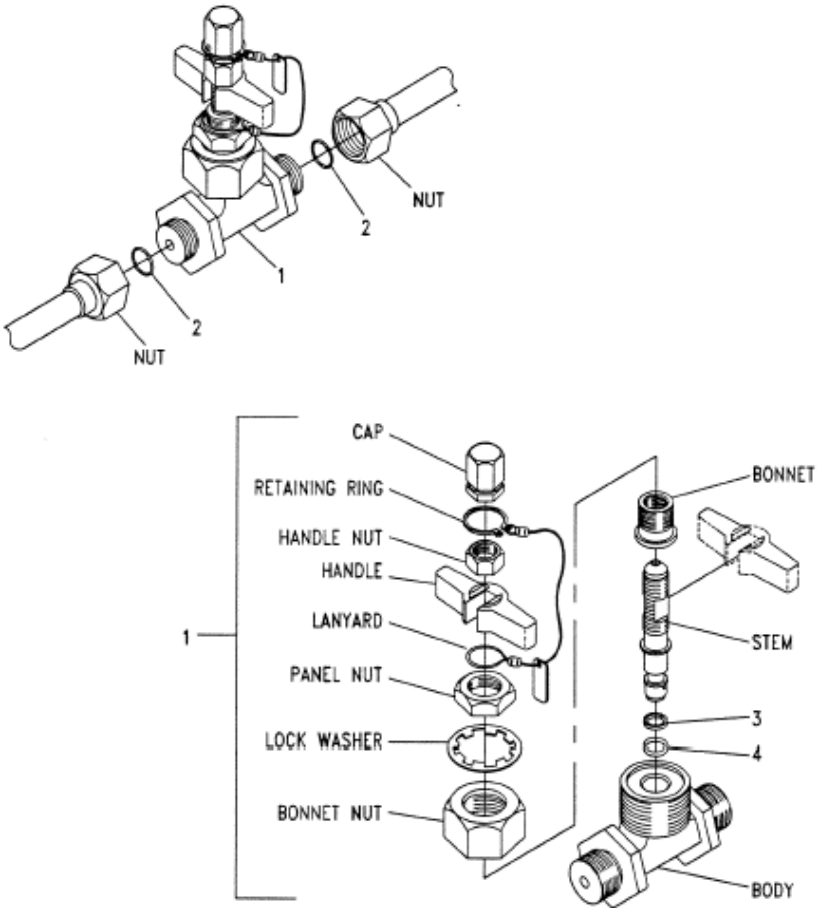

Figure 6–1. Gauge Isolation Needle Valve (PLC-10699)

b. Remove and discard O-rings (2).

c. Remove cap, retaining ring, handle nut, lanyard, panel nut and lock from valve. Remove valve from panel.

Downloaded from http://www.everyspec.com

6-6.1.2 Gauge Isolation and Test Valve Repair.

a. Separate and remove gauge isolation valve components.

NOTE

If stem is damaged, the entire gauge isolation valve must be replaced.

b. Inspect stem for damage.

c. Apply a light coat of lubricant MIL-PRF-27617 Type III, install a new backup ring (3) and O-ring (4), and secure as shown above.

6-6.1.3 Gauge Isolation and Test Valve Reinstallation.

a. Install valve (1) on panel and secure with lock washer, and panel nut. Install lanyard, handle, handle nut, retaining ring, and cap.

b. Using new O-rings (2), apply a light coat of lubricant MIL-PRF-27617 Type III and install tubing connector nuts that secure the valve in the system.

6-6.2 ISOLATION BALL VALVES. The following sections list the Swagelok® isolation ball valves by size and model.

a. 2-Way Isolation Ball Valves. Tables 6-2 through 6-6 list the ball valves found in the SNDLRCS. The lists are presented by size and model of the valves and the procedures for removal, installation, and repair for each model follow the tables.

1. $^{1}/_{4}$-Inch Isolation Ball Valve (B-62TF4) (see Figure 6-2). The following $^{1}/_{4}$-inch valves are manufactured by Whitey Co. and distributed by Swagelok. These valves are generally hull isolation valves for sensing, sampling, and vent valves. These are Swagelok Series 60 valves and are maintained in accordance with the procedures listed in sections 6-6.2.1 through 6-6.2.3.

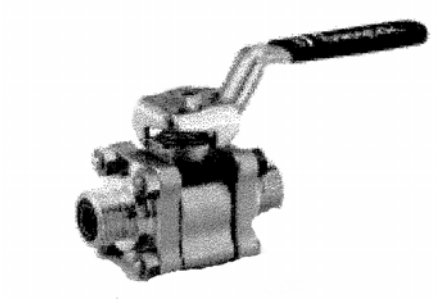

Figure 6–2. $^{1}/_{4}$-Inch Isolation Ball Valve (B-62TF4)

Table 6-2. Model B-62TF4 Isolation Ball Valves

Valve Number	Description
ATM-V-2	IL Primary Depth Gauge Hull Stop Valve
ATM-V-4	IL Secondary Depth Gauge Hull Stop Valve
ATM-V-6	OL Primary Depth Gauge Hull Stop Valve

Downloaded from http://www.everyspec.com

Table 6-2. Model B-62TF4 Isolation Ball Valves (contd)

ATM-V-8	OL Secondary Depth Gauge Hull Stop Valve
ATM-V-11	Gas Sample Hull Stop Valve
ATM-V-12	IL Built-In Breathing System (BIBS) Back Pressure Regulator Tracking Hull Valve
ATM-V-13	Gas Sample Hull Stop Valve
ATM-V-14	OL BIBS Back Pressure Regulator Tracking Hull Valve
EQ-V-2	Medical Lock Equalization Control Valve
EQ-V-4	Outer Chamber Hatch Outer Equalization Valve
EQ-V-5	Outer Chamber Hatch Inner Equalization Valve

Note: The seal and repair kit for the Model B-62TF4 valve is part number SS-91K-R62T.

2. $^1/_2$-Inch Isolation Ball Valve (B-63TF8) (see Figure 6-3). The following $^1/_2$-inch valves are manufactured by Whitey Co. and distributed by Swagelok. These valves are generally hull isolation valves or component isolation valves. These are Swagelok Series 60 valves and are repaired or replaced in accordance with the procedures listed in sections 6-6.2.1 through 6-6.2.3.

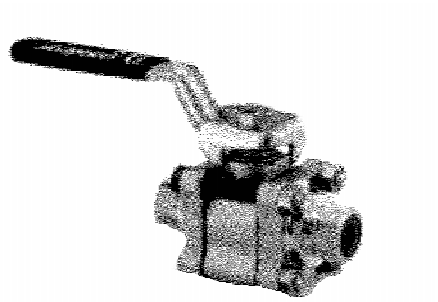

Figure 6–3. $^1/_2$-Inch Isolation Ball Valve (B-63TF8)

Table 6-3. Model B-63TF8 Isolation Ball Valves

Valve Number	**Description**
ALP-V-11	Secondary LP Air Gauge Isolation Valve
ALP-V-15	OL BIBS Air Supply Stop Valve
ECS-V-1	Environmental Control System (ECS) Hot or Cold Water Supply Valve
ECS-V-2	ECS Hot or Cold Water Return Valve
EXH-V-1	IL BIBS Exhaust Back Pressure Regulator (BPR) Bypass Valve
EXH-V-2	IL BIBS Exhaust Hull Stop Valve
EXH-V-3	OL BIBS Exhaust BPR Bypass Valve
EXH-V-4	OL BIBS Exhaust Hull Stop Valve

Note: The seal and repair kit for the Model B-63TF8 valve is part number SS-91K-R63T.

3. 1-Inch Isolation Ball Valve (B-65TF16/SS-51K-65) (see Figure 6-4). The following 1-inch valves are manufactured by Whitey Co. and distributed by Swagelok. These valves are

Downloaded from http://www.everyspec.com

generally hull component isolation valves. These are Swagelok Series 60 valves and are repaired or replaced in accordance with the procedures listed in sections 6-6.2.1 through 6-6.2.3.

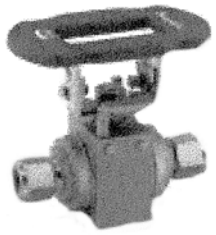

Figure 6–4. 1-Inch Isolation Ball Valve (B-65TF16)

Table 6-4. Model B-65TF16/SS-51K-65 Isolation Ball Valves

Valve Number	Description
ALP-V-3	Primary LP Air Shutoff Valve
ALP-V-4	Primary LP Air Cross Connect Valve
ALP-V-9	Secondary LP Air Shutoff Valve
ALP-V-10	Secondary LP Air Cross Connect Valve
ATM-V-9	Pressure Relief Hull Stop Valve

Note: The seal and repair kit for the Model B-65TF16 valve is part number SS-91K-R65T.

4. $1^1/_2$-Inch Isolation Ball Valve (SS-67TF24) (see Figure 6-5). The following $1^1/_2$-inch valves are manufactured by Whitey Co. and distributed by Swagelok. These valves are generally hull component isolation valves. These are Swagelok Series 60 valves and are repaired or replaced in accordance with the procedures listed in sections 6-6.2.1 through 6-6.2.3.

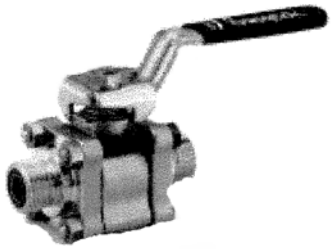

Figure 6–5. $1^1/_2$-Inch Isolation Ball Valve (SS-67TF24)

Table 6-5. Model SS-67TF24 Isolation Ball Valves

Valve Number	Description
EXH-V-5	IL Fast Exhaust Valve
EXH-V-7	IL Exhaust Valve
EXH-V-8	OL Fast Exhaust Valve
EXH-V-9	OL Exhaust Valve

Note: The seal and repair kit for the Model SS-67TF24 valve is part number SS-91K-R67T.

Downloaded from http://www.everyspec.com

5. Three-Way Ball Valve (Model SS-62XTF4) (see Figure 6-6). Located in the medical lock exhaust, the three-way ball valve directs fluid flow through two paths. One path is a vent path to atmosphere and the other allows inner lock pressure to be directed to the to the medical lock. This valve is a Swagelok Series 60 valve and is disassembled and repaired in accordance with sections 6-6.2.1 through 6-6.2.3

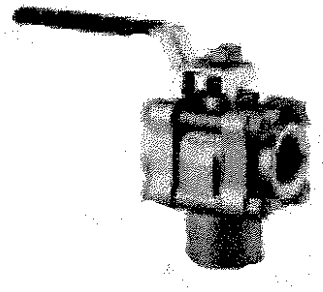

Figure 6–6. Three-Way Isolation Ball Valve (Model SS-62XTF4)

Table 6-6. Three-Way Isolation Ball Valve (Model SS-62XTF4)

Valve Number	Description
EQ-V-1	Medical Lock Vent Valve

Note: The seal and repair kit for the Model SS-62XTF4 valve is part number SS-91K-R62T.

6-6.2.1 Isolation Ball Valve Removal.

DANGER

Do not disassemble components while the HP Air Reducing Station is under pressure. Failure to observe this warning may result in injury or death to personnel.

WARNING

Depressurize and tag the appropriate valves "DO NOT OPERATE" in accordance with PMS procedures prior to performing maintenance on any HP system.

NOTE

The maintenance action for any gauge isolation valves involves entry into a certified boundary and requires a REC procedure.

a. Remove tubing connector nuts or the four body fastener nuts and bolts (as appropriate) that secure the valve in the system (see Figure 6-7).

b. Remove and discard O-rings (2).

Downloaded from http://www.everyspec.com

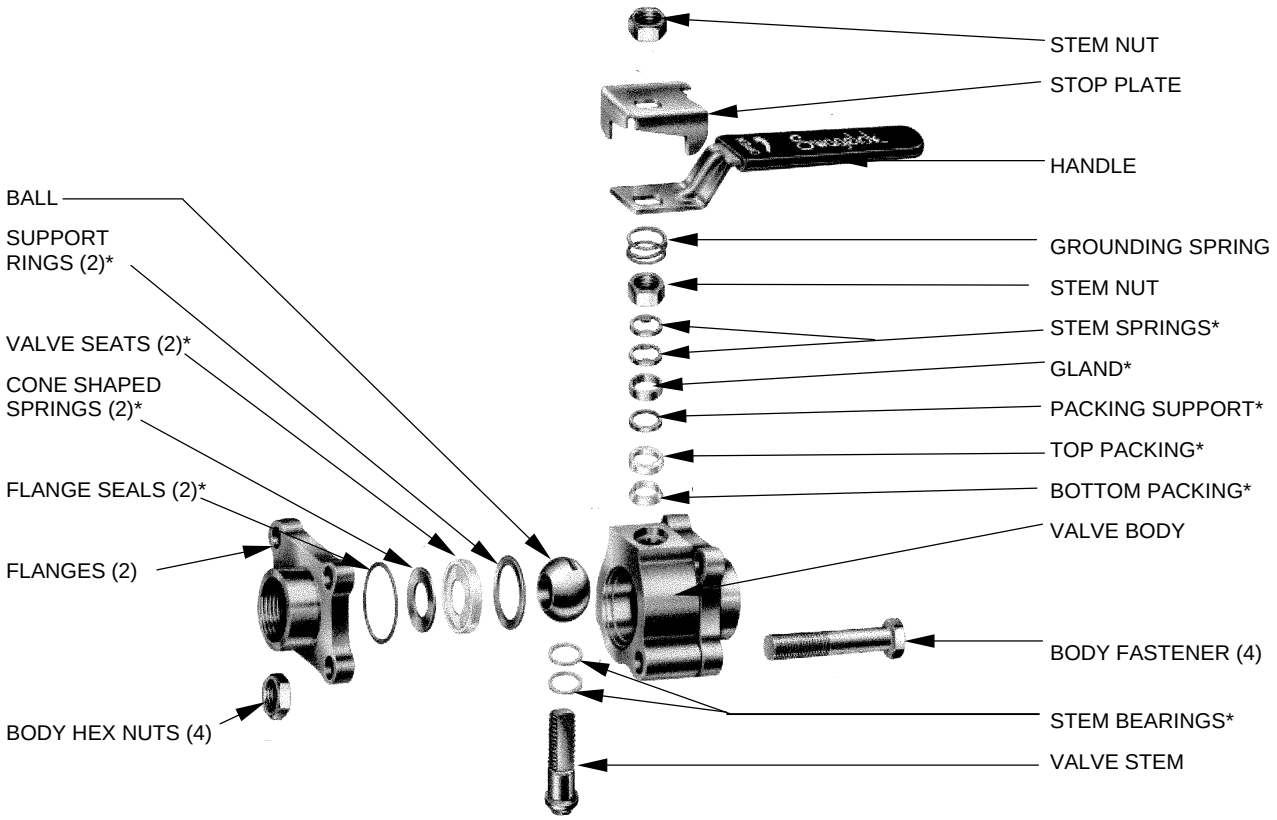

* Indicates parts included in seal kit.

Figure 6–7. Series 60 Ball Valve Breakdown

6-6.2.2 Isolation Ball Valve Disassembly and Reassembly.

NOTES

On the Series 62 valve the stop plate is an integral part of the valve handle.

See Tables 6-1 through 6-6 for the ordering information for the Seal Kit for each model of valve.

a. Remove the valve stem nut and stop plate.

b. Remove the valve handle and grounding spring.

c. Loosen the body hex nuts and remove the hex nuts and body fasteners.

NOTE

When removing the end flanges care must be taken or the flange seals, cone shaped springs, seats, and support rings may be damaged.

d. Carefully remove the two body flanges.

Downloaded from http://www.everyspec.com

e. Remove the flange seals, cone shaped springs, seats, and support rings from the valve body.

f. Loosen and remove the stem nut.

g. Remove the stem springs, gland, packing support, and the top and bottom packing from the valve stem.

h. Remove the valve stem through the valve body.

i. Remove the valve ball and stem bearings.

CAUTION

Verify that the valve internal parts are installed in the correct order and proper orientation. Failure to properly align parts will result in damage to the valve or leakage.

j. Inspect all parts for wear, cuts, dirt, and deformation. Replace any worn or damaged parts.

k. Reassemble valve using the components in the seal kit. Verify that all O-rings, seals, and packing are replaced. Assemble the valve components in reverse order of disassembly.

6-6.2.3 Isolation Ball Valve Reinstallation.

a. Using new O-rings (2), apply a light coat of lubricant MIL-G-27617 Type III and install tubing connector nuts that secure the valve in the system (1).

6-6.3 NEEDLE CONTROL VALVES (MODELS B-18VF8-G AND B-18VF8-ST). Located in the oxygen, low-pressure air, mixed gas, and atmospheric exhaust piping are needle valves (see Figure 6-8) that control the flow (hence pressure) within the system. The $^{1}/_{2}$-inch needle valves are used in the oxygen and mixed gas systems of the SNDLRCS to control the flow and pressure of the gases for the BIBS Systems (see Table 6-7). Refer to sections 6-6.3.1 through 6-6.3.3 for removal, repair, and installation procedures.

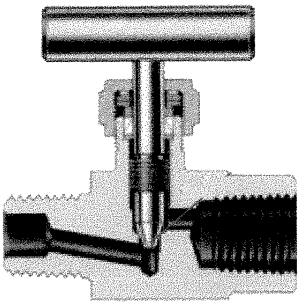

Figure 6–8. $^{1}/_{2}$-Inch Needle Control Valves (Models B-18VF8-G and B-18VF8-ST)

Table 6-7. Needle Control Valves (Models B-18VF8-G and B-18VF8-ST)

Valve Number	Description
MLP-V-2	LP Mixed Gas Shutoff Valve
MLP-V-4	LP Mixed Gas Hull Stop Valve
OLP-V-2	Primary LP O_2 Supply Valve
OLP-V-4	Secondary LP O_2 Supply Valve

Downloaded from http://www.everyspec.com

Table 6–7. Needle Control Valves (Models B-18VF8-G and B-18VF8-ST) (contd)

Valve Number	Description
OLP-V-6	IL BIBS O_2 Hull Stop Valve
OLP-V-8	OL BIBS O_2 Hull Stop Valve

Note: Stem packing kit part number is PFA-91K-18.

6-6.3.1 Needle Control Valve Removal.

DANGER

Do not disassemble components while the HP Air Reducing Station is under pressure. Failure to observe this warning may result in injury or death to personnel.

WARNING

Depressurize and tag the appropriate valves "DO NOT OPERATE" in accordance with PMS procedures prior to performing maintenance on any HP system.

a. Loosen the tubing connector nuts that secure the valve in the system.

b. Loosen and remove the panel nut (if installed).

NOTE

The maintenance action for any pressure boundary valves involves entry into a certified boundary and requires a REC procedure.

c. Remove valve from piping.

d. Discard old O-ring.

6-6.3.2 Needle Control Valve Disassembly and Reassembly.

a. Loosen the handle set screw; remove the bar handle (see Figure 6-9).

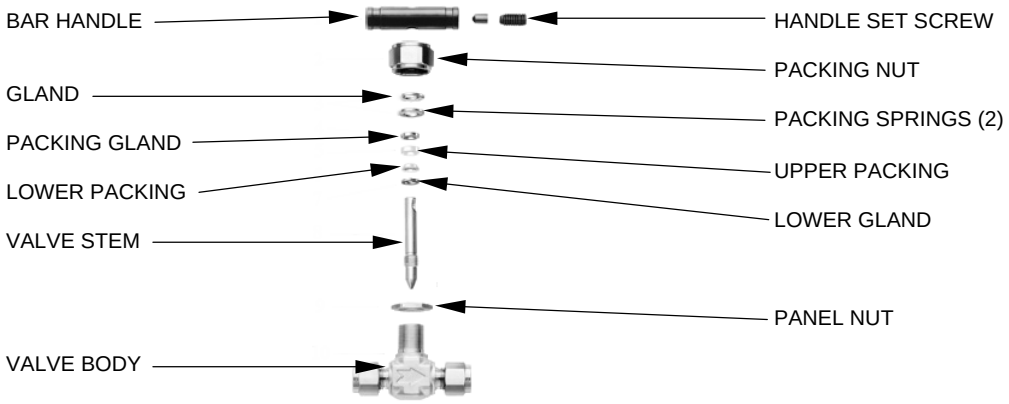

Figure 6–9. Series 18 Needle Valve Breakdown

Downloaded from http://www.everyspec.com

b. Loosen and remove the packing gland nut.

c. Place the bar handle on the valve stem; turn the valve counterclockwise to remove stem from the valve. As the stem is retracted, the packing gland, packing springs, upper and lower packing, and the lower gland will be removed from the valve body with the valve stem.

d. Disassemble the stem components, noting the order and orientation of the parts. Inspect the valve components; replace any that are worn, scored, deformed, or show signs of corrosion.

e. Reinstall valve stem into valve body. Turn the valve clockwise to lightly seat the stem to the seat.

CAUTION

Verify that the valve internal parts are installed in the correct order and proper orientation. Failure to properly align parts will result in damage to the valve or leakage.

f. Install the lower gland, lower and upper packing, packing gland, and packing springs by sliding them over the valve stem into the packing gland.

g. Install the packing nut on the valve body.

h. Install the bar handle and handle set screw.

6-6.3.3 Needle Control Valve Reinstallation.

a. Apply a light coat of lubricant MIL-PRF-27617 Type III; install a new backup ring and O-ring.

b. Tighten tubing connector nuts that secure the valve in the system.

c. Install and tighten the panel nut (if appropriate) to secure the valve to the control panel.

6-6.4 1-INCH SOFT SEAT NEEDLE CONTROL VALVES (MODELS 818051KR and A8187515KR). The 1-inch soft seat angle needle and needle control valves (see Figures 6-10 and 6-10A) are used in the low-pressure air and atmospheric exhaust systems to control pressure in the inner and outer locks of the SNDL recompression chamber (see Tables 6-8 and 6-8A). Refer to sections 6-6.4.1 through 6-6.4.3 for removal, repair, and reinstallation procedures for soft seat needle control valves and 6-6.4.4 through 6-6.4.6 for removal, repair, and reinstallation procedures for soft seat angle needle control valves.

NOTE

The 1-inch soft seat valves are usually repaired in place. If a valve cannot be repaired in place, remove and reinstall it as described below.

Downloaded from http://www.everyspec.com

6-6.4.1 1-Inch Soft Seat Angle Needle Control Valve Removal.

WARNING

Depressurize and tag the appropriate valves "DO NOT OPERATE" in accordance with PMS procedures prior to performing maintenance on any HP system.

NOTE

The maintenance action for any pressure boundary valves involves entry into a certified boundary and requires a REC procedure.

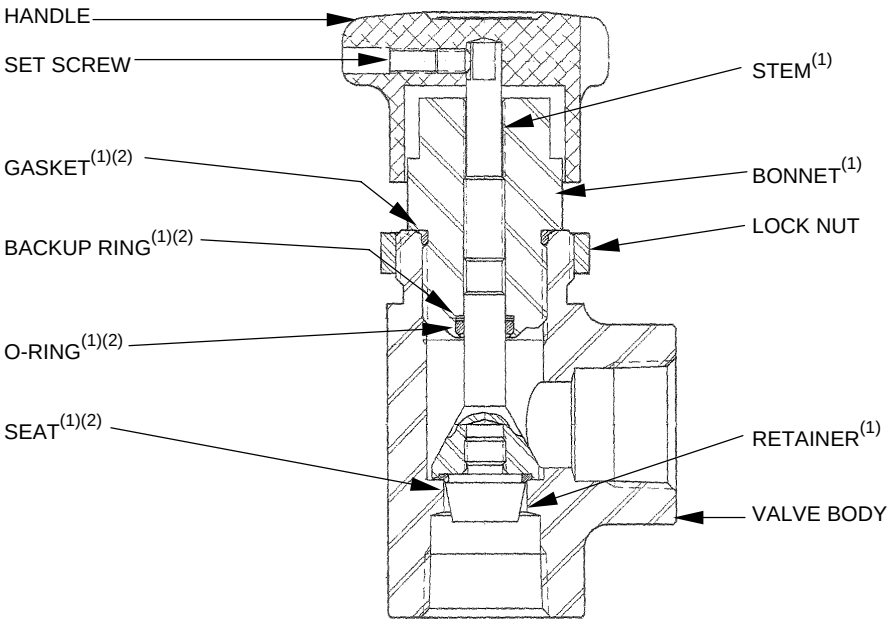

(1) Parts included in valve repair kit, part number RBK-18294-KR
(2) Parts included in soft goods kit, part number 95S-17774-KR.

Figure 6–10. 1-Inch Soft Seat Angle Needle Control Valve (Model A8187515KR)

Table 6-8. 1-Inch Soft Seat Angle Needle Control Valve (Model A8187515KR)

Valve Number	Description
ALP-V-13	OL LP Air Pressurization Valve
ALP-V-5	IL LP Air Pressurization Valve

a. Loosen and remove the handle set screw.

b. Remove handle.

c. Remove lock nut.

Downloaded from http://www.everyspec.com

d. Loosen the VCO O-ring face seal fitting and the threads on the threaded fitting.

e. Remove and inspect O-rings for cuts, nicks, or other damage to ensure that the fitting mating surfaces are satisfactory.

6-6.4.2 1-Inch Soft Seat Angle Needle Control Valve Disassembly, Inspection, Repair, and Reassembly.

NOTE

If valve is already removed, proceed to step d.

a. Loosen and remove the handle set screw.

b. Remove handle.

c. Remove lock nut.

d. Remove valve bonnet by turning the wrench pad surface on the valve bonnet. When loosening the valve bonnet, the stem, valve disc, and associated parts will be removed from the valve body.

e. Inspect the valve body for foreign material, corrosion, or evidence of damage. If the valve body is damaged, remove and replace the valve.

f. Remove the valve stem by turning the valve (cw) towards the closed direction. The stem will be extruded through the bottom of the valve bonnet assembly.

g. Using a hex key wrench, remove the valve seat from the valve seat retainer.

h. Remove the Teflon sealing surface from the face of the valve disc.

i. Remove the valve packing O-ring and backing ring from the center bore of the valve bonnet.

j. Inspect the stem, valve disc, and bonnet for signs of damage, corrosion, galling, and other damage. Replace valve if the valve cannot be repaired in place due to damaged components.

NOTE

Heat the valve packing Teflon ring in 180°F water for approximately 5 minutes to increase its flexibility and facilitate installation.

k. Install the packing O-ring backing ring into the groove in the inner bore of the valve bonnet.

l. Install the packing O-ring into the groove in the inner bore of the valve bonnet.

m. Install the Teflon O-ring on the valve seat retainer.

n. Install the valve seat retainer into the valve stem. Tighten to 150 - 175 in-lb torque.

Downloaded from http://www.everyspec.com

CAUTION

Verify that the valve stem is fully retracted into the bonnet prior to threading the bonnet onto the valve body. Failure to do so will cause excessive force to be applied to the valve disc, damaging the disc or bending the valve stem.

o. Thread the valve stem into the valve bonnet.

p. Install the bonnet to body gasket and thread the valve bonnet into the valve body. Tighten to 95 - 115 in-lb torque.

q. Install the lock nut.

r. Install the valve handle and set screw. Torque the set screw to 70 - 80 in-lb.

6-6.4.3 1-Inch Soft Seat Angle Needle Control Valve Reinstallation.

a. Install new O-ring in the pipe unions.

b. Install the tubing connector nuts that secure the valve in the system.

6-6.4.4 1-Inch Soft Seat Needle Control Valve Removal.

WARNING

Depressurize and tag the appropriate valves "DO NOT OPERATE" in accordance with PMS procedures prior to performing maintenance on any HP system.

NOTES

The maintenance action for any pressure boundary valves involves entry into a certified boundary and requires a REC procedure.

Table 6-8A. 1-Inch Soft Seat Needle Control Valves (Model 8180515KR)

Valve Number	Description
EXH-V-6	IL Slow Exhaust Valve

Downloaded from http://www.everyspec.com

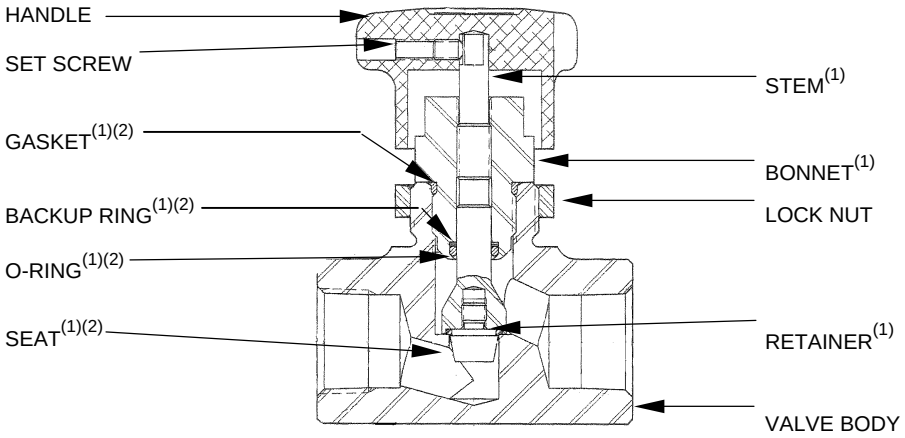

(1) Parts included in valve repair kit, part number RBK-18293-KR
(2) Parts included in soft goods kit, part number 95S-17772-KR.

Figure 6–10A. 1-Inch Soft Seat Needle Control Valve (Model 8180515KR)

a. Loosen and remove the handle set screw.

b. Remove handle.

c. Remove lock nut.

d. Loosen the VCO O-ring face seal fitting and the threads on the threaded fitting.

e. Remove and inspect O-rings for cuts, nicks, or other damage to ensure that the fitting mating surfaces are satisfactory.

6-6.4.5 1-Inch Soft Seat Needle Control Valve Disassembly, Inspection, Repair, and Reassembly.

NOTE

If valve is already removed, proceed to step d.

a. Loosen and remove the handle set screw.

b. Remove handle.

c. Remove lock nut.

d. Remove valve bonnet by turning the wrench pad surface on the valve bonnet. When loosening the valve bonnet, the stem, valve disc, and associated parts will be removed from the valve body.

e. Inspect the valve body for foreign material, corrosion, or evidence of damage. If the valve body is damaged, remove and replace the valve. Remove the valve stem by turning the valve (cw) towards the closed direction. The stem will be extruded through the bottom of the valve bonnet assembly.

Downloaded from http://www.everyspec.com

f. Using a hex key wrench, remove the valve seat from the valve seat retainer.

g. Remove the Teflon sealing surface from the face of the valve disc.

h. Remove the valve packing O-ring and backing ring from the center bore of the valve bonnet.

i. Inspect the stem, valve disc, and bonnet for signs of damage, corrosion, galling, and other damage. Replace valve if the valve cannot be repaired in place due to damaged components.

NOTE

Heat the valve packing Teflon ring in 180°F water for approximately 5 minutes to increase its flexibility and facilitate installation.

j. Install the packing O-ring backing ring into the groove in the inner bore of the valve bonnet.

k. Install the packing O-ring into the groove in the inner bore of the valve bonnet.

l. Install the Teflon O-ring on the valve seat retainer.

m. Install the valve seat retainer into the valve stem. Tighten to 150 - 175 in-lb torque.

CAUTION

Verify that the valve stem is fully retracted into the bonnet prior to threading the bonnet onto the valve body. Failure to do so will cause excessive force to be applied to the valve disc, damaging the disc or bending the valve stem.

n. Thread the valve stem into the valve bonnet.

o. Install the bonnet to body gasket and thread the valve bonnet into the valve body. Tighten to 95 - 115 in-lb torque.

p. Install the lock nut.

q. Install the valve handle and set screw. Torque the set screw to 70 - 80 in-lb.

6-6.4.6 1-Inch Soft Seat Needle Control Valve Reinstallation.

a. Install new O-ring in the pipe unions.

b. Install the tubing connector nuts that secure the valve in the system.

Downloaded from http://www.everyspec.com

6-6.5 HP ISOLATION VALVE (MODEL G2SGM8-08C).

The HP isolation valve, Model G2SGM8-08C (see Figure 6-11), is found in the HP air supply. The valve acts as an isolation valve between the HP air supply and the primary or secondary air reducing stations (see Table 6-9). Refer to sections 6-6.5.1 through 6-6.5.3 for removal, repair, and reinstallation procedures.

Downloaded from http://www.everyspec.com

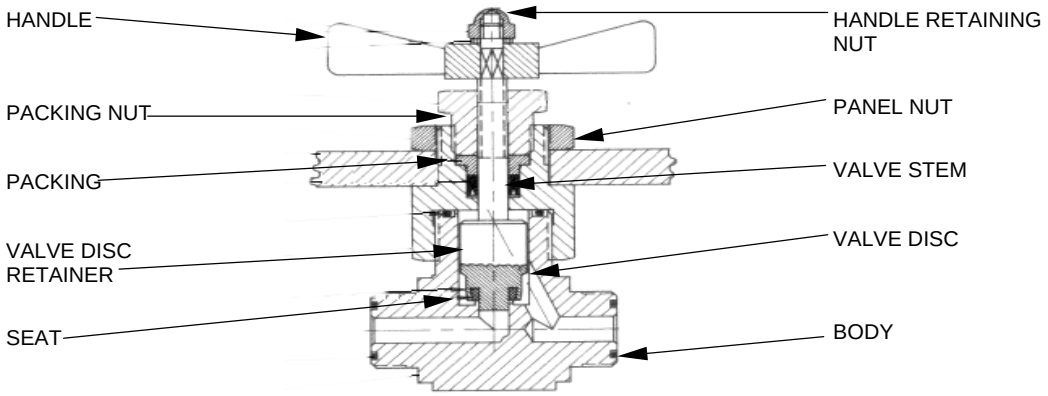

Figure 6–11. HP Isolation Valve (Model G2SGM8-08C)

Table 6-9. HP Isolation Valve (Model G2SGM8-08C)

Valve Number	Description
AHP-V-101	Primary HP Air Supply Valve
AHP-V-102	Secondary HP Air Supply Valve

6-6.5.1 HP Isolation Valve Removal.

WARNING

Depressurize and tag the appropriate valves "DO NOT OPERATE" in accordance with PMS procedures prior to performing maintenance on any HP system.

NOTE

The maintenance action for any pressure boundary valves involves entry into a certified boundary and requires a REC procedure.

a. Loosen and remove the handle-retaining nut.

b. Remove handle.
c. Remove panel nut.
d. Loosen the VCO O-ring face seal fitting and the threads on the threaded fitting.
e. Remove and inspect O-rings for cuts, nicks, or other damage to ensure that the fitting mating surfaces are satisfactory.

6-6.5.2 HP Isolation Valve Disassembly, Inspection, Repair, and Reassembly.

DANGER

Do not disassemble components while the SNDLRCS or any of the associated systems are under pressure. Failure to observe this warning may result in injury or death to personnel.

Downloaded from http://www.everyspec.com

WARNINGS

Depressurize and tag the appropriate valves "DO NOT OPERATE" in accordance with PMS procedures prior to performing maintenance on any HP system.

Oxygen gas supports combustion and lowers the activation energy for any combustible material. Use only approved solvents and lubricants while performing maintenance to oxygen valves and piping to prevent explosion hazards.

NOTE

The maintenance action for any pressure boundary valves involves entry into a certified boundary and requires a REC procedure.

a. Loosen and remove the handwheel nut and handwheel.

b. Loosen and remove the panel nut and packing gland.

c. Loosen and remove the valve bonnet.

d. Remove the valve stem by turning the valve in the closed direction. The valve stem will be extruded downward through the valve bonnet.

e. Remove the valve packing.

f. Inspect the valve stem, bonnet, packing gland, disc retainer, and disc for corrosion, deformation, and damage. Repair or replace components as necessary.

CAUTION

Verify that the valve stem is fully retracted into the bonnet prior to threading the bonnet onto the valve body. Failure to do so will cause excessive force to be applied to the valve disc, damaging the disc or bending the valve stem.

g. Place the valve stem into the valve bonnet. Verify that the valve stem is fully threaded into the bonnet to the "backseated" position.

h. Install the valve bonnet onto the valve body.

i. Repack the valve stem.

j. Install the panel nut and packing gland.

k. Install the valve handle and handle retaining nut.

6-6.5.3 HP Isolation Valve Reinstallation.

a. Apply a light coat of lubricant MIL-PRF-27617 Type III; install a new backup ring and O-ring.

b. Tighten tubing connector nuts that secure the valve in the system.

c. Install and tighten the panel nut (if appropriate) to secure the valve to the control panel.

Downloaded from http://www.everyspec.com

d. Install the panel nut, packing gland (if required to mount to the panel), handle, and handle retaining nut.

6-6.6 $^1/_2$-INCH NEEDLE VALVE (MODEL M-6NRVCO8-M). The $^1/_2$-inch needle valve, Model M-6NRVCO8-M, is found in the HP oxygen system. It is used as the HP oxygen isolation valve (see Table 6-10). Refer to sections 6-6.6.1 through 6-6.6.3 for removal, repair, and reinstallation procedures.

Table 6-10. $^1/_2$-Inch HP Isolation Valve (Model M-6NRVCO8-M)

Valve Number	Description
OHP-V-201	Primary HP O_2 External Supply Shutoff Valve
OHP-V-203	Secondary HP O_2 External Supply Shutoff Valve

Note: The valve packing kit for the Model M-6NRVCO8-M valve (see Figure 6-12) is part number PK-9K-6N.

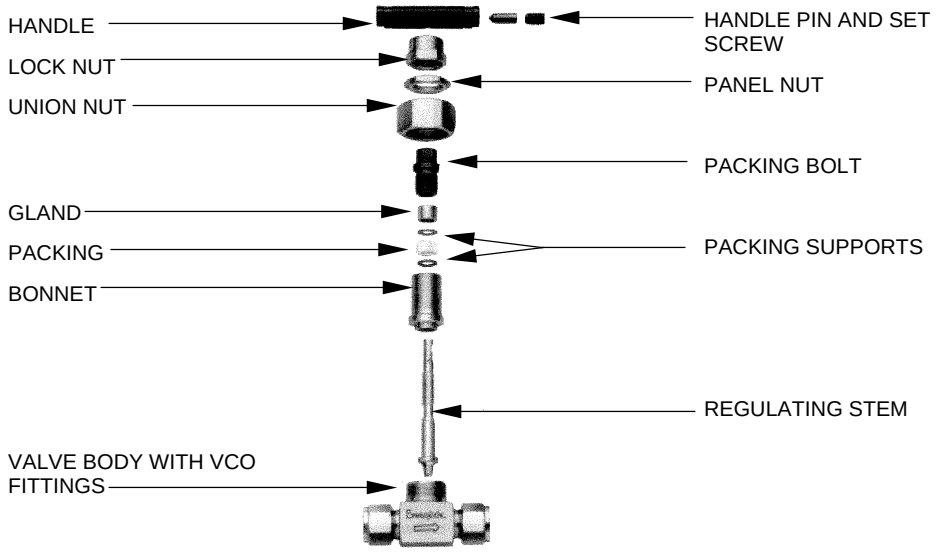

Figure 6–12. HP O_2 External Supply Shutoff Valve (Model M-6NRVCO8-M)

6-6.6.1 $^1/_2$-Inch Needle Valve Removal.

DANGER

Do not disassemble components while the SNDLRCS or any of the associated systems are under pressure. Failure to observe this warning may result in injury or death to personnel.

WARNINGS

Depressurize and tag the appropriate valves "DO NOT OPERATE" in accordance with PMS procedures prior to performing maintenance on any HP system.

Downloaded from http://www.everyspec.com

Oxygen gas supports combustion and lowers the activation energy for any combustible material. Use only approved solvents and lubricants while performing maintenance to oxygen valves and piping to prevent explosion hazards.

NOTE

The maintenance action for any pressure boundary valves involves entry into a certified boundary and requires a REC procedure.

a. Loosen the handle set screw and remove the set screw and handle pin. Loosen and remove the panel nut (if installed).

b. Loosen the tubing connector nuts that secure the valve in the system.

c. Remove valve from piping.

d. Discard old O-ring.

6-6.6.2 $^{1}/_{2}$-Inch Needle Valve Disassembly, Inspection, Repair, and Reassembly.

a. If not removed, remove the handle by loosening and removing the set screw and handle pin.

b. Remove the lock nut and panel nut.

c. Remove the union nut.

d. Loosen and remove the packing nut.

e. Place the valve handle on the stem. Extract the stem by turning the valve in the open direction. The packing, packing support, and bonnet will be removed with the stem.

f. Disassemble the packing, packing support, and bonnet from the stem.

g. Inspect the stem, valve body, and internal parts for wear, corrosion, scoring, or other damage. Replace any worn or damaged parts.

h. Install the valve stem into the valve bonnet; turn the stem in the open direction until the stem contacts the bonnet.

CAUTION

Verify that the valve stem is fully retracted into the bonnet prior to threading the bonnet onto the valve body. Failure to do so will cause excessive force to be applied to the valve disc, damaging the disc or bending the valve stem.

i. Install the lower packing support (if applicable), packing, upper packing support (if applicable), gland, and packing bolt onto the valve stem and bonnet.

j. Install the union nut over the stem and thread it onto the valve body.

k. Install the panel nut, lock nut, handle, handle pin, and set screw.

Downloaded from http://www.everyspec.com

6-6.6.3 $^{1}/_{2}$-Inch Needle Valve Reinstallation.

a. Apply a light coat of lubricant MIL-PRF-27617 Type III. Install a new backup ring and O-ring.

b. Tighten tubing connector nuts that secure the valve in the system.

c. Install and tighten the panel nut (if appropriate) to secure the valve to the control panel.

d. Install the lock nut, handle, handle pin, and set screw.

6-6.7 RELIEF VALVES. Relief valves (see Figures 6-13 through 6-16 and Table 6-11) are installed in the HP air, HP oxygen, mixed gas, LP air, LP oxygen, and atmospheric air systems in the SNDLRCS. These valves provide protection to components in the event of system overpressurization due to malfunctioning regulators, valve leakage, temperature changes, or operator error. In order to disassemble, repair, or rebuild relief valves, access to clean room facilities with the appropriate flow/pressure test equipment is required. In the field, replace defective relief valve. Refer to sections 6-6.8.1 and 6-6.8.3 for removal and installation procedures; refer to the component technical manual for repair procedures.

Table 6-11. Installed Relief Valves

Valve No.	Description	Part Number
ALP-V-1	Primary LP Air Supply Relief Valve	19KDDK300
ALP-V-7	Secondary LP Air Supply Relief Valve	19KDDK300
ALP-V-104	Primary LP Air Reducer Outlet Relief Valve	521FEBKV0300 or 521FEBZMX1
ALP-V-105	Secondary LP Air Reducer Outlet Relief Valve	521FEBKV0300 or 521FEBZMX1
ATM-V-10	Recompression Chamber Hull Relief Valve	N1532-8M(L)-110M ASME
MLP-V-1	LP Mixed Gas Supply Relief Valve	B-8CPA-2-150
OLP-V-1	Primary LP O_2 Supply Relief Valve	B-8CPA-2-150
OLP-V-3	Secondary LP O_2 Supply Relief Valve	B-8CPA-2-150

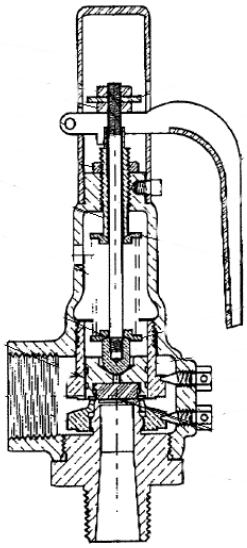

Figure 6–13. LP Relief Valve (Model 19KDDK300)

Downloaded from http://www.everyspec.com

Notes. 1. The manufacturer has changed the part number for this valve. The old number was 19-301-300.

2. Any 19KDDK300, 521FEBKV0300 or 521FEBZMX1 relief valve that does not seem to be functioning properly should be sent to an approved test facility for testing and replaced, if necessary.

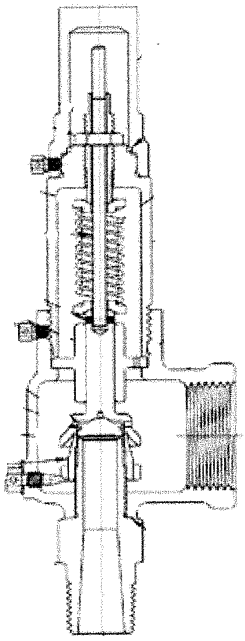

Figure 6–14. HP Air Relief Valve (Model 521FEBKV0300 or 521FEBZMX1)

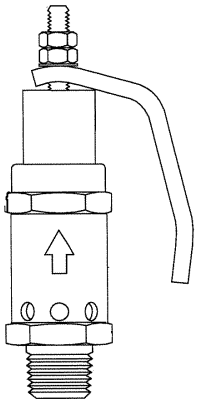

Figure 6–15. Atmospheric Relief Valve (Model M5132-8M(L)-110M ASME)

Note: In normal service, the only parts that might require replacement are the seals. A repair kit can be ordered by placing a K/ in front of the complete part number.

Downloaded from http://www.everyspec.com

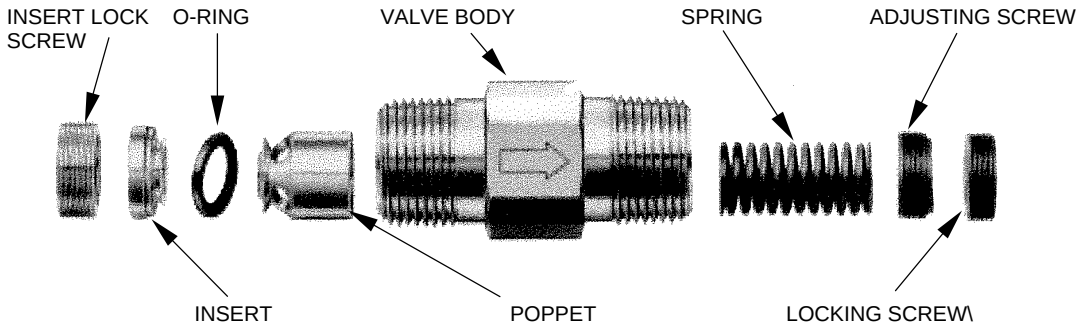

Figure 6–16. LP Mixed Gas and O_2 Relief Valve (Model B-8CPA2-150)

Note: Repair Parts for the B-8CPA2-150 check valve are as follows:

1. Elastomer (O-ring) kit – BU90-8CP-K4.
2. Spring kit – 302-BCA-K2-150

6-6.8 SYSTEM CHECK VALVES. Check valves, by design, allow fluid flow in only one direction. The in-line check valves are designed to positively control the fluid flow with a minimum flow reduction due to obstructions within the valve (see Figure 6-17, and Tables 6-12 and 6-13). Refer to sections 6-6.8.1 through 6-6.8.3 for removal, repair, and installation procedures.

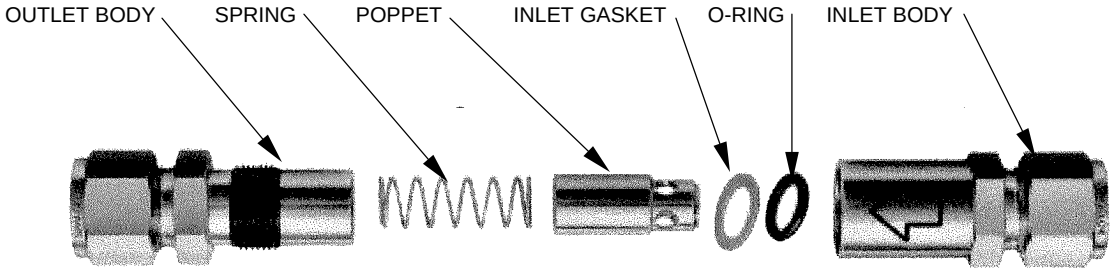

Figure 6–17. C Series Check Valve (Models B-8C4-$^1/_3$ and B-16C4-$^1/_3$)

Table 6-12. $^1/_2$-Inch Check Valves (Model B-8C4-$^1/_3$)

Valve Number	Description
ALP-V-12	IL BIBS LP Air Manifold Supply Check Valve
ALP-V-16	OL BIBS LP Air Manifold Supply Check Valve
OLP-V-7	IL BIBS LP O_2 Manifold Supply Check Valve
OLP-V-9	OL BIBS LP O_2 Manifold Supply Check Valve
MLP-V-5	IL BIBS LP Mixed Gas Manifold Supply Check Valve

Note: Repair Kit for the B-8C4-$^1/_3$ check valve is part number M-8C4-SG-$^1/_3$.

Table 6-13. 1-Inch Check Valves (Model B-16C4-$^1/_3$)

Valve Number	Description
ALP-V-6	IL LP Air Pressurization Supply Check Valve
ALP-V-14	OL LP Air Pressurization Supply Check Valve

Downloaded from http://www.everyspec.com

Note: Repair parts for the B-16C4-$^{1}/_{3}$ are as follows:

1. Elastomer (O-ring) kit - V170-14C-K4
2. Spring kit – 302-14C-K2-$^{1}/_{3}$
3. Gasket kit – A-14C-K6

6-6.8.1 System Check Valve Removal.

DANGER

Do not disassemble components while the SNDLRCS or any of the associated systems are under pressure. Failure to observe this warning may result in injury or death to personnel.

WARNING

Depressurize and tag the appropriate valves "DO NOT OPERATE" in accordance with PMS procedures prior to performing maintenance on any HP system.

NOTE

The maintenance action for any check valves involves entry into a certified boundary and requires a REC procedure.

a. Loosen the tubing connector nuts on the check valve end fittings.

b. Slide the fittings down the tubing, and remove the fitting O-rings.

c. If installed, loosen and remove the bracket bolts and remove bracket.

6-6.8.2 System Check Valve Disassembly, Inspection, Repair, and Reassembly.

a. Place check valve body in vise or place a wrench on the hexagonal portion of the outlet body. Put a second wrench on the hexagonal purpose of the inlet body. Loosen the inlet body and separate the two halves of the valve.

b. Remove the spring, poppet, O-ring, and inlet gasket from the inlet body.

c. Inspect all parts for corrosion, cracks, deformation, and other damage. Replace any defective components.

d. Install spring and poppet from the valve and new O-rings and seals from the repair parts kit into the outlet body.

e. Using a silicone-based lubricant, lightly lubricate the outlet body threads; thread the two body halves together.

f. Tighten the body halves.

6-6.8.3 System Check Valve Reinstallation.

a. Using new O-rings (2), apply a light coat of lubricant MIL-PRF-27617 Type III and install tubing connector nuts that secure the valve in the system.

Downloaded from http://www.everyspec.com

6-7 PIPING SUPPORT COMPONENT IDENTIFICATION, REPLACEMENT AND REPAIR.

The following sections list gauges, strainers, regulators, and other support equipment found in the SNDLRCS piping systems. Included are part numbers of the components, descriptions, and procedures for removal, repair, and replacement of each.

6-7.1 SYSTEM FILTERS. Filters are installed in the HP air, mixed gas, and oxygen systems to ensure purity of the system fluid. Refer to sections 6-7.1.1 through 6-7.1.3 for removal, repair, and installation procedures.

a. Model B-8TF2-15 Filter Elements. Installed in the chamber oxygen and mixed gas supply piping, the B-8TF2-15 filter (see Figure 6-18) provides filtration to remove particles of 15 microns or larger. Refer to sections 6-7.1.1 through 6-7.1.3 for removal, disassembly and repair, and reinstallation of the filter element. See Table 6-14 below.

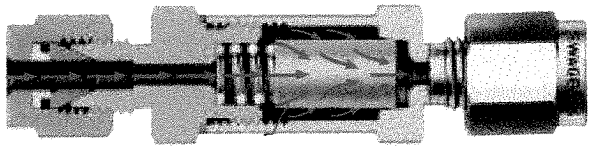

Figure 6–18. Model B-8TF2-15 Filter

Notes. 1. Replacement sintered element for series 8-TF filter is SS-8F-K4-15.
2. Replacement filter gasket for series 8-TF filter is SS-8TF-K2.

Table 6-14. Model B-8TF2-15 Filters

Filter Number	Description
OLP-F-1	Primary O_2 Supply Filter
OLP-F-2	Secondary O_2 Supply Filter
MLP-F-1	Mixed Gas Supply Filter

b. Models U956 and 4326G Filter Elements. Installed in the high- and low-pressure air piping, these filter elements (see Figure 6-19) remove particles of 15 microns or larger. Refer to sections 6-7.1.1 through 6-7.1.3 for removal, disassembly and repair, and installation of the filter element. See Table 6-15 below.

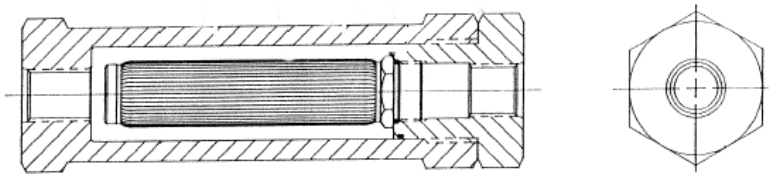

Figure 6–19. Models U956 and 43 26 G-20 Filters

Table 6-15. Models U956 and 43 26 G-20 Filters

Filter Number	Description
ALP-F-1	Primary LP Air Supply Filter
ALP-F-2	Secondary LP Air Supply Filter

Downloaded from http://www.everyspec.com

Table 6–15. Models U956 and 43 26 G-20 Filters (contd)

AHP-F-1	Primary HP Air Supply Filter
AHP-F-2	Secondary HP Air Supply Filter

Note: See Tables 7-32 and 7-33 for parts listings for the U956 and 4326-G filters and filter elements.

6-7.1.1 Filter Removal.

DANGER

Do not disassemble components while the SNDLRCS or any of the associated systems are under pressure. Failure to observe this warning may result in injury or death to personnel.

WARNING

Depressurize and tag the appropriate valves "DO NOT OPERATE" in accordance with PMS procedures prior to performing maintenance on any HP system.

NOTE

The maintenance action for any check valves involves entry into a certified boundary and requires a REC procedure.

a. Loosen the tubing connector nuts on the filter body end fittings.

b. Slide the fittings down the tubing, and remove the fitting O-rings.

c. If installed, loosen and remove the bracket bolts and remove the bracket.

6-7.1.2 Filter Disassembly, Inspection, and Reassembly. Although manufactured by different companies, these filter elements are disassembled, inspected, and repaired in the same manner.

a. Loosen and remove the case plug.

b. Extract the filter element, O-ring gasket, and spring (if installed).

WARNING

Oxygen gas supports combustion and lowers the activation energy for any combustible material. Use only approved solvents and lubricants while performing maintenance to oxygen valves and piping to prevent explosion hazards.

c. Inspect the body cavity of dirt, debris, oil residue, or other foreign materials. Clean the cavity using approved solvents and lint-free cloths.

d. Inspect the filter body, case plug, spring, and end fittings for corrosion, damage, deformation, and other damage. Repair or replace components as necessary.

e. Replace the strainer element.

Downloaded from http://www.everyspec.com

f. Reinstall the spring (if installed), filter element, and sealing ring in the filter body cavity.

g. Install new O-ring and case plug on the filter body.

6-7.1.3 Filter Reinstallation.

a. Using new O-rings (2), apply a light coat of lubricant MIL-G-27617 Type III and install tubing connector nuts that secure the filters in the system.

b. If removed, reinstall filter element brackets.

6-7.2 SYSTEM PRESSURE REGULATORS. Regulators (see Figures 6-20 and 6-21) are designed to control the output pressure of a fluid system to provide a constant pressure for use. In the SNDLRCS, the regulators are designed to control the pressure for HP air, HP oxygen, and low-pressure diver's breathable air. In order to disassemble, repair, or rebuild pressure regulators, access to clean room facilities with the appropriate flow/pressure test equipment is required (see Tables 6-16 and 6-17). Refer to the component technical manual for repair procedures, specifications, and torque values. On site, follow the procedures in sections 6-7.2.1 and 6-7.2.2 for removal and reinstallation of pressure regulators. For a complete parts breakdown, see Figure 7-22 (HP Air Regulator), Figure 7-23 (HP Oxygen Regulator), and Figure 7-24 (BIBS Exhaust Manifold Pressure Regulator).

Table 6-16. Pressure Regulators

Valve Number	Description
AHP-R-108	Primary HP Air Regulator
AHP-R-109	Secondary HP Air Regulator
EXH-R-1	IL BIBS Exhaust Manifold Pressure Regulator
EXH-R-2	OL BIBS Exhaust Manifold Pressure Regulator
OHP-R-205	Secondary HP O_2 Regulator
OHP-R-206	Primary HP O_2 Regulator

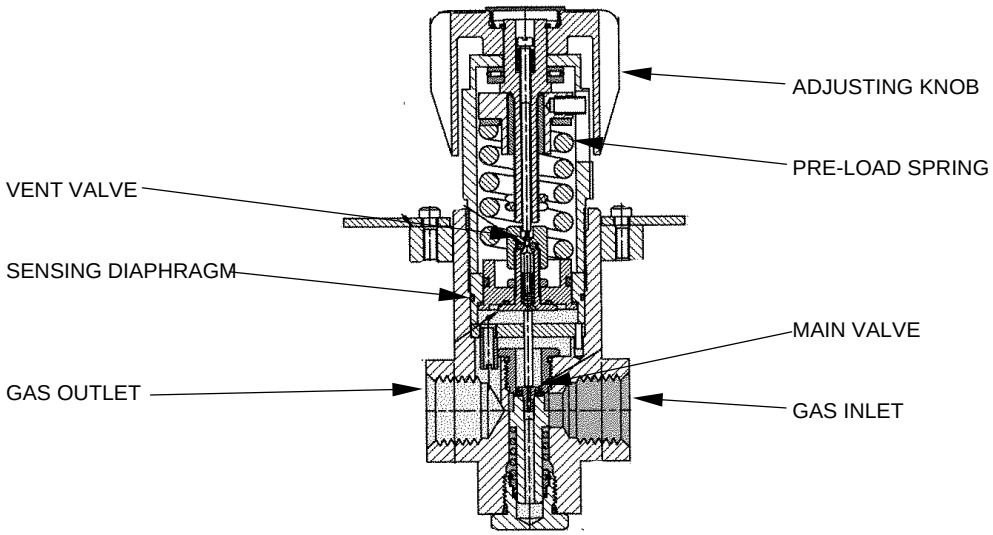

Figure 6–20. HP Air Regulator (Series 44)

Downloaded from http://www.everyspec.com

Note: The following soft goods kits and repair kits are available for the Tescom Series 44 regulators used in the SNDLRCS:

Table 6-17. Repair Kits for System Pressure Regulators

Valve No.	Valve PN	Soft Goods Kit PN	Repair Kit PN
OHP-R-205 OHP-R-206	44F5417T308	389F7022	389F7023
AHP-R-108 AHP-R-109	44F-1323-0812-262	389F7496	389F7497

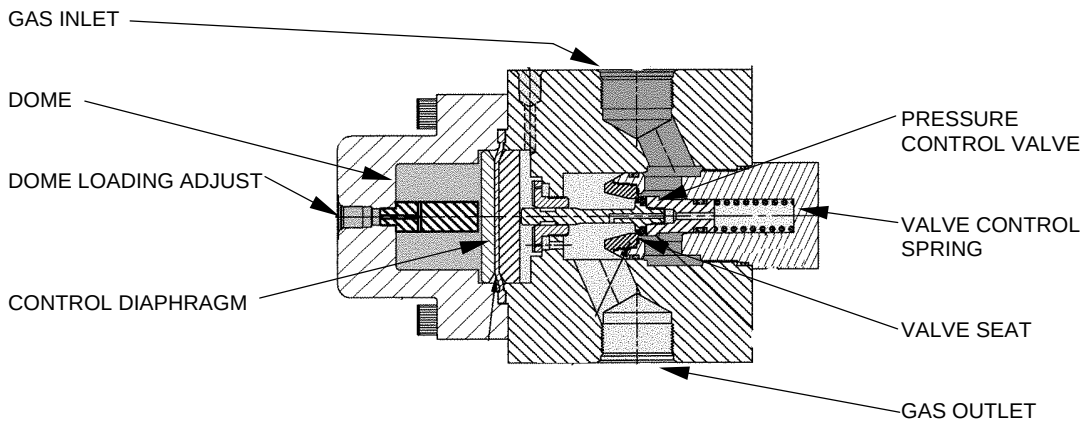

Figure 6–21. BIBS Exhaust Regulator (Model 26-2912-282A)

Note: The soft goods kit for Tescom Regulator 26-2912-282A is Part Number 389-1913. The repair kit for Tescom Regulator 26-2912-282A is Part Number 389-2809.

6-7.2.1 System Pressure Regulator Removal. To remove a regulator for repair, proceed as follows:

DANGER

Do not disassemble components while the SNDLRCS or any of the associated systems are under pressure. Failure to observe this warning may result in injury or death to personnel.

WARNINGS

Depressurize and tag the appropriate valves "DO NOT OPERATE" in accordance with PMS procedures prior to performing maintenance on any HP system.

Oxygen gas supports combustion and lowers the activation energy for any combustible material. Use only approved solvents and lubricants while performing maintenance to oxygen valves and piping to prevent explosion hazards.

Downloaded from http://www.everyspec.com

NOTE

The maintenance action for a regulator involves entry into a certified boundary and requires a REC procedure.

a. Loosen the tubing connector nuts on the check valve end fittings.

b. Slide the fittings down the tubing and remove the fitting O-rings.

c. If installed, loosen and remove the bracket bolts and remove bracket.

6-7.2.2 System Pressure Regulator Reinstallation. To reinstall a pressure regulator, proceed as follows:

a. Using new O-rings (2), apply a light coat of lubricant MIL-G-27617 Type III and install tubing connector nuts that secure the filters in the system.

b. If removed, reinstall filter element brackets.

6-7.3 SYSTEM GAUGES. The following gauges (see Table 6-18) are installed. For gauge failure, or for gauges that are out of calibration, replace the gauge with an approved, calibrated gauge.

Table 6-18. Installed Gauges

Gauge No.	Description	Location	Part Number
ALP-G-1	Primary LP Air Supply Gauge	Chamber Control Console	25502-27B21GAD-GCL-GCO
ALP-G-2	Secondary LP Air Supply Gauge	Chamber Control Console	25502-27B21GAD-GCL-GCO-GDA
ALP-G-3	Medical Lock Pressure Gauge	Medical Lock	25502-23B11GAD-GCO-GDA-CBE
ALP-G-101	Primary LP Air Supply Gauge	HP Air Reducing Station	25502-28B31MCD
AHP-G-102	Primary HP Air Supply Gauge	HP Air Reducing Station	25502-37B31MCD
AHP-G-103	Secondary HP Air Supply Gauge	HP Air Reducing Station	25502-37B31MCD
ALP-G-104	Secondary LP Air Supply Gauge	HP Air Reducing Station	25502-28B31MCD
MLP-G-1	LP Mixed Gas Pressure Gauge	Chamber Control Console	25502-27B21GAD-GBK-GCO-GDA
OHP-G-201	Primary HP O_2 Supply Gauge	Oxygen Reducing Station	25502-34B31 MCD
OHP-G-202	Secondary HP O_2 Supply Gauge	Oxygen Reducing Station	25502-34B31 MCD
OHP-G-203	Primary O_2 Regulator Outlet Pressure Gauge	Oxygen Reducing Station	25502-27B31 MCD
OHP-G-204	Secondary O_2 Regulator Outlet Pressure Gauge	Oxygen Reducing Station	25502-27B31 MCD
OLP-G-1	LP O_2 Supply Gauge	Chamber Control Console	25502-27B21GAD-GBK-GCO-GDA

Downloaded from http://www.everyspec.com

Table 6-18. Installed Gauges (Contd)

Gauge No.	Description	Location	Part Number
PN-G-1	IL Primary Depth Gauge	Chamber Control Console	25546-23B21GAD-GDA-CBE
PN-G-2	IL Secondary Depth Gauge	Chamber Control Console	25546-23B21GAD-GDA-CBE
PN-G-3	OL Primary Depth Gauge	Chamber Control Console	25546-23B21GAD-GDA-CBE
PN-G-4	OL Secondary Depth Gauge	Chamber Control Console	25546-23B21GAD-GDA-CBE

6-7.4 BIBS COMPONENTS. The BIBS system within the chamber consists of regulators, quick disconnects, hoses, and masks (see Figure 6-22 and Table 6-19). In the event of component failure, remove and replace the failed component or assembly. For further information on repair or replacement of BIBS components, refer to the individual BIBS component operation and maintenance manual. For a complete parts breakdown, refer to Figure 7-14.

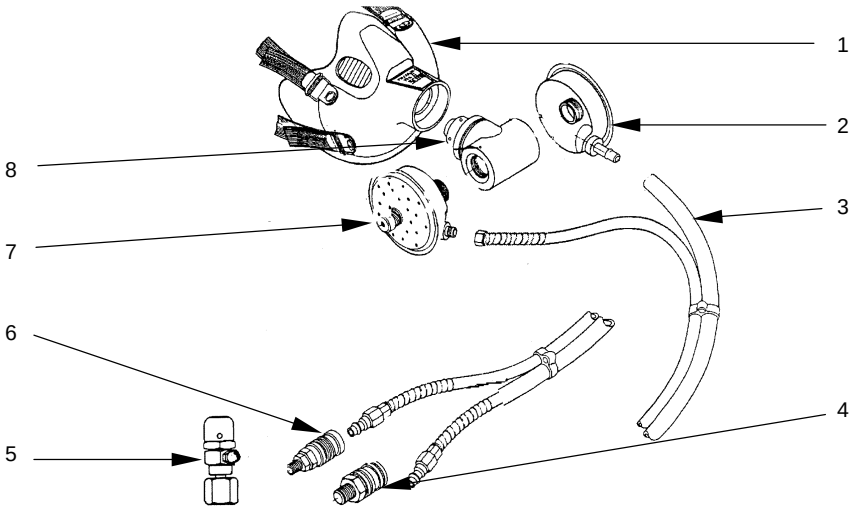

Figure 6–22. BIBS Regulator and Mask Assembly

Table 6-19. BIBS Replacement Components

Index Number	Description	Component Part Number
6-22-1	Mask Assembly, with Straps	801266-00
-2	Exhaust Regulator Assembly	801274-00
-3	Dual Hose Assembly	803166-10
-4	Quick Disconnect, Exhaust, $^{3}/_{8}$ NPT	59853-00
-5	BIBS Mask Supply Regulator	58370-00
-6	Quick Disconnect, Demand, $^{1}/_{8}$ NPT	18969-00
-7	Demand Regulator Assembly	800954-01
-8	Manifold Assembly Housing	803100-01

Downloaded from http://www.everyspec.com

6-8 ELECTRICAL COMPONENT IDENTIFICATION, REPLACEMENT AND REPAIR.

The following sections list components that are electrically powered and support SNDLRCS chamber operation. Included are part numbers of the components, descriptions, and procedures for removal, repair, and replacement of each.

6-8.1 CARBON DIOXIDE (CO_2) SCRUBBER. The carbon dioxide scrubber is a self-contained unit. When operating, the 24-volt dc fan passes chamber atmospheric air through the scrubber's absorbent material to remove CO_2 from the chamber atmosphere. The only routine maintenance action is to inspect the unit and to renew the CO_2 absorbent media.

6-8.1.1 CO_2 Scrubber Absorbent Material Replacement.

WARNINGS

Service the absorbent material canister outdoors or in a well-ventilated area over a container suitable for disposal of expended absorbent. If not strictly observed, chemical burns to the skin, eyes, or lungs could result.
Carbon dioxide absorbent material will form alkali compounds when mixed with water. These compounds can irritate the eyes, throat, mucus membranes, and skin. Take appropriate precautions to avoid breathing absorbent material or getting it into eyes or on skin. Do not stand downwind of canister while filling. If not strictly observed, injury to personnel could result.

When filling the canister, thoroughly settle the carbon dioxide absorbent material filter bed. If improperly filled, channels may develop which would allow gases passing through the filter bed to bypass the absorbent material. This may cause high output concentrations of CO_2, causing personnel injury

Do not overfill the carbon dioxide absorbent material cannister. The canister is filled to 1 inch below the top to prevent accumulation of excessive carbon dioxide absorbent material in the bottom of the canister. Failure to leave this space may cause personnel injury due to carbon dioxide absorbent material escaping during operation.

a. Tag CO_2 scrubber "Out of Service."

b. Release the cam clamps and remove the absorbent media canister.

c. Remove the canister from the chamber; perform maintenance in a well-ventilated area.

d. Release the cam clips and remove the canister top.

e. Remove the media; ensure that it is properly packaged for disposal.

Downloaded from http://www.everyspec.com

f. Inspect the scrubber canister, screen, and filter discs for CO_2 absorbent residue. Clean as necessary to remove any residue.
g. Inspect exterior of canister for damage, deformation, and corrosion. Repair or replace components as necessary.
h. Refill canister with approximately 9 pounds of absorbent media. Verify that that canister is not overfilled.
i. Reinstall the canister top.
j. Using a clean dry cloth, wipe exterior of canister to ensure that all residue is removed.
k. Reinstall the canister onto the scrubber.
l. Remove tags; return the CO_2 scrubber to service.

6-8.2 ELECTRICAL AND LIGHTING SYSTEMS. In the event of an electrical system component fault or failure, replace the affected component; inspect, and return the electrical system to operation.

6-8.3 UNINTERRUPTIBLE POWER SUPPLY (UPS) SYSTEM. In the event of fault or failure to the UPS, replace the affected component; inspect, and return the system to operation.

6-8.4 GAS ANALYZERS. In the event of fault or failure to the gas analyzers, refer to the component technical manual, replace the affected component; inspect, and return the analyzer to operation.

6-8.5 HEATING AND AIR CONDITIONING SYSTEMS. Located within the SNDLRCS van and within the chamber are heating and air conditioning systems. These systems are individual 220-volt single-phase ac units. These units contain Freon R134a, which displaces oxygen and therefore should not be repaired while the chamber is operating. For corrective maintenance of these units refer to the component technical manuals for repair of internal components.

6-9 SNDLRCS VAN.

The shipping container (van) must be maintained in accordance with the International Institute of Container Leasors (IICL) standards. This inspection ensures that if a commercial carrier ships the SNDLRCS, it will meet the minimum requirements for international shipment. The following procedures apply:

6-9.1 REPAIRS OF LEAKS. If the container leaks, the only authorized repairs are to weld or rivet new exterior material into the leaking area. Except in emergencies, do not attempt to seal leaks using caulking compound. After any repairs to the van's exterior, inspect the repaired area for light leaks by closing the van and directing a strong white light from the outside of the van onto the repaired area. After the repair no visible light is allowed.

6-9.2 REPAIRS OF DOORS, DOGS, AND GASKETS. If the shipping or personnel doors or dogs are difficult to operate or fail to properly close, inspect, clean, lubricate, and/or repair them as necessary. Inspect the door gaskets by putting chalk on the door sealing edge, and closing and securing the closing dogs. The gasket should have a continuous line (approximately $^1/_8$" wide) around the circumference of the gasket corresponding to the sealing surface. After the repair is complete, inspect the repaired area

Downloaded from http://www.everyspec.com

for light leaks by closing the van and directing a strong white light from the outside of the van onto the repaired area. After the repair, no visible light is allowed.

6-9.3 REPAIRS TO FLOORS AND STRUCTURAL COMPONENTS. If any rot, deformation, or other damage is noted to the floors or structural components, replace the damaged component.

6-9.4 REPAIRS TO OPERATOR VESTIBULE. Inspect the Herculite® components and restitch or replace them as required. If damaged, repair the structural components (floor, ceiling, and supporting components) as needed by welding or riveting new components. If the structural integrity of the van is affected, refer to sections 6-9.1 and 6-9.2 for inspection criteria.

Downloaded from http://www.everyspec.com

THIS PAGE INTENTIONALLY BLANK.

Downloaded from http://www.everyspec.com

CHAPTER 7

ILLUSTRATED PARTS BREAKDOWN

7-1 INTRODUCTION.

This chapter provides parts lists, which identify components needed for maintenance of the Standard Navy Double-Lock Recompression Chamber System (SNDLRCS).

Due to the SNDLRCS complexity and to enhance training, operation and maintenance, all SNDLRCS principal gas system components (valves, regulators, relief valves, etc.) are cross-referenced to exploded views and parts listings contained in Figures 7-15 through 7-34 and Tables 7-15 through 7-34, respectively.

7-2 PRIME VENDOR PROGRAM.

The Defense Logistics Agency (DLA) and Defense Supply Center Philadelphia (DSCP) have created the Prime Vendor (PV) Program, which designates specific manufacturers as primary suppliers to the U.S. Government. Instead of going through the usual process of acquiring three bids, Government installations can now simply contact their Prime Vendor. The Prime Vendor's responsibility is to provide the highest quality item requested at the lowest price available and to deliver the item in the most timely manner possible.

Prime Vendors have been designated for various types of items, such as medical and pharmaceutical supplies, clothing, food, and maintenance parts. Contacting a Prime Vendor provides the following advantages:

- On-line ordering and quotations.
- Ability to place orders 24 hours day, seven days a week.
- Ability to check current or past order status anytime.
- Automatic pre-authorization of all purchases.
- Hassle-free submission of credit card or Mil-Strip orders.
- Private and secure exchange of credit card information; i.e., information is not published on the Web.
- No unauthorized substitutions.
- No requirement to get three bids for any order.

The PV program is able to provide both commercial off-the-shelf (COTS) items, National Stock Number (NSN) items and MILSPEC items to exacting government specifications. The PV program has already eliminated many large-scale government purchases and warehousing requirements and is also reducing the need for issuing some NSNs. Since these contracts have already been competitively bid and are reviewed on a regular basis, PV customers are not required to solicit three bids to order equipment. These contracts allow the customer to order the specific brand name product they require to meet their mission need. The PV can immediately add new products as they become available.

Downloaded from http://www.everyspec.com

Because PV contracts are a component of DLA, PVs can accept Mil-Strip requisitions (just like the stock system). PVs also accept government credit cards and Military Interdepartmental Purchase Requests (MIPRs).

For more information, contact Ralph Lund, rlund@dscp.dla.mil at DSN 444-4154 or (215) 737-4052.

7-3 COMMERCIAL AND GOVERNMENT ENTITY (CAGE) CODES AND MANUFACTURERS.

The CAGE codes, addresses, and telephone numbers for manufacturers of SNDLRCS components shown in this chapter are listed below. This information is subject to change. See the Business Identification Number Cross-reference System (BINCS) Web page on the Internet at http://www.gidm.dlis.dla.mil/bincs/begin_search.asp for up-to-date information. In the list below, an asterisk indicates obsolete CAGE codes.

Prime Vendor	CAGE Code	Manufacturer / Address / Phone Number
	14749	Acopian Technical Co. 131 Loomis Street Easton, PA 18045-3742 (610) 258-5441
	0MG77	American Power Conversion 132 Fairgrounds Road West Kingston, RI 02892-1511 (800) 890-4272
X	8S239	Amron Corp. 1313 Dolly Madison Boulevard Suite 300 Mclean, VA 22101 – 3926 (703) 848-0571
X	6S753	Amron International 759 W 4th Avenue Escondido, CA 92025 (760) 746-3834
	11649*	Cajon Co. 9760 Shepard Road Macedonia, OH 44056-1124 (216) 467-0200
	91816	Circle Seal Controls, Inc. 2301 Wardlow Circle Corona, CA 92880-2881 (909) 270-6236

Downloaded from http://www.everyspec.com

Prime Vendor	CAGE Code	Manufacturer / Address / Phone Number
	57661	Conbraco Industries, Inc. Highway 51 S P.O. Box 125 Pageland, SC 29728 (843) 672-6161
	Z9P50	Cowan Mfg. Pty. Ltd. Warners Bay NSW Australia
	99565	CPV Mfg., Inc. 851 N. Preston Street Philadelphia, PA 19104-1598 (215) 386-6508
	2B109	Cutler Hammer, Inc. 150 N. Radnor-Chester Road Suite 320, Bldg A Wayne, PA 19087 (610) 293-2358
	97399	Dragon Valves, Inc. 13457 Excelsior Drive Norwalk, CA 90650-5235 (562) 921-6605
	7U212	Frigidaire Co. 3817 Traylor Drive Richmond, VA 23235-1757 (804) 320-5354
	20040*	Gilbert Plastics Mfg. Co. Baltimore, MD 21200
	0MWH0	Highstar Industrial Technologies 500 Portcentre Parkway Portsmouth, VA 23704-4922 (757) 398-9300
	0WYU8	Lumidor Safety Products Corp. 11221 Interchange Cir. S. Miramar, Fl 33025 954-433-7000
	81349	Military Specifications Promulgated by Military Departments/Agencies Under Authority of Defense Standardization Manual 4120 3-M

Downloaded from http://www.everyspec.com

Prime Vendor	CAGE Code	Manufacturer / Address / Phone Number
	53711	Naval Sea Systems Command 1333 Isaac Hull Avenue SE Washington Navy Yard, DC 20376 (202) 781-0000
	59165	Norman Filter Co., L.L.C. 9850 S. Industrial Drive Bridgeview, IL 60455 (708) 233-5521
	18034	Nupro Co. 4800 E. 345th Street Willoughby, OH 44094-4607 (440) 473-1050
	45681	Parker Hannifin Corp. Division Corporate Headquarters 6035 Parkland Boulevard Mayfield Heights, OH 44124-4141 (800) 272-7537
	02697	Parker Hannifin Corp. Division O-Ring Division 2360 Palumbo Drive Lexington, KY 40509-1048 (859) 269-2351
	79926	SSP Fittings Corp. 8250 Boyle Parkway Twinsburg, OH 44087-2200 (330) 425-4250
	017E4	Scott Aviation 1992 Irish Bank Virginia Beach, VA 23454 (804) 481-2249
	51847	Scott Specialty Gases, Inc. 6141 Easton Road Plumsteadville, PA 18949-0310 (215) 766-8861
	02570	Swagelok Companies 29500 Solon Road Solon, OH 44139-3449

Downloaded from http://www.everyspec.com

Prime Vendor	CAGE Code	Manufacturer / Address / Phone Number
	13669	Tescom Corp. 12616 Industrial Boulevard Elk River, MN 55330 (612) 241-3288
	52159	3D Instruments 15542 Chemical Lane Huntington Beach, CA 92649 - 1505 (714) 894-5351
	16166	Western Enterprises Division of Scott and Fetzer Co. 33672 Pin Oak Parkway Avon Lake, Oh 44012 - 2322 (440) 933-2171
	12623	Whitey Co. 318 Bishop Road Cleveland, OH 44143-1533 (440) 473-1050

7-4 PARTS LIST COLUMN DEFINITIONS.

The principal component parts lists (Tables 7-1 through 7-34) are divided into multiple columns to enhance operator/maintainer referencing. Individual column explanations are given in the following sections.

7-4.1 FIG./INDEX NUMBER. The figure number identifies the number of the illustration in which the item is shown. The index number identifies individual items in the illustration.

7-4.2 CAGE CODE. The Commercial and Government Entity (CAGE) code is a five-digit numeric code, listed in SB 708-42, which identifies the manufacturer of the component/part.

7-4.3 PART NUMBER. This column lists the number used by the manufacturer (individual, company, firm, corporation, or Government activity) that controls the design and characteristics of the item by means of engineering drawings, specifications, standards, and inspection requirements, to identify an item or range of items.

7-4.4 DESCRIPTION. The description indicates the Federal item name and, if required, a minimum description to identify the item. Items included in kits and sets are listed below the name of the kit or set with the quantity of each item indicated in the unit column. When the part used differs between serial numbers of the same model, the effective serial numbers are shown as the last line of the description.

7-4.5 QTY. This column indicates the quantity of the item shown on the illustration figure that is prepared for a functional group, sub-functional group, or an assembly. An AR (as required) appearing

Downloaded from http://www.everyspec.com

in this column in lieu of a quantity indicates that no specific quantity is applicable. This designation applies to items such as shims, spacers, and so forth, which are used as required.

7-5 SNDLRCS FIGURE INDEX.

Figures, titles, and page numbers are shown in the following index:

Figure No.	Item	Label Numbers	Page
7-1	SNDLRCS Van – Top View		7-10
7-2	SNDRLCS Van – Port Side View		7-11
7-3	Air Supply Rack Assembly (ASRA)		7-12
7-4	Pressure Vessel General Assembly		7-14
7-5	Recompression Chamber Viewport		7-16
7-6	Recompression Chamber Doors		7-18
7-7	Chamber Control Console		7-20
7-7A	Door Mounted ASRA HP Air Transition Panel		7-23
7-8	Bulkhead Transition Panel		7-24
7-9	O_2/CO_2 Calibration Gas Kit		7-26
7-10	Oxygen Reducing Station – Oxygen Bottles		7-27
7-11	Oxygen Reducing Station Panel		7-28
7-12	High-Pressure (HP) Air Reducing Station – Front View		7-32
7-13	HP Air Reducing Station – Side View		7-36
7-14	Built-In Breathing System (BIBS) Mask		7-38
7-15	Isolation Ball Valve	ALP-V-3 ALP-V-4 ALP-V-9 ALP-V-10 ALP-V-11 ALP-V-15 ATM-V-2 ATM-V-4 ATM-V-6 ATM-V-8 ATM-V-9 ATM-V-11 ATM-V-12 ATM-V-13 ATM-V-14 ECS-V-1 ECS-V-2 EQ-V-1 EQ-V-2	7-42

Downloaded from http://www.everyspec.com

Figure No.	Item	Label Numbers	Page
7-15 (contd)	Isolation Ball Valve (contd)	EQ-V-4 EQ-V-5 EXH-V-1 EXH-V-2 EXH-V-3 EXH-V-4 EXH-V-5 EXH-V-7 EXH-V-8 EXH-V-9	7-42
7-16	System Check Valve	ALP-V-6 ALP-V-12 ALP-V-14 ALP-V-16 MLP-V-5 OLP-V-7 OLP-V-9	7-45
7-17	Needle Control Valve	MLP-V-2 MLP-V-4 OLP-V-2 OLP-V-4 OLP-V-6 OLP-V-8	7-46
7-18	Gauge Isolation and Test Needle Valve	AHP-V-103 AHP-V-106 AHP-V-107 AHP-V-110 ALP-V-2 ALP-V-8 ATM-V-1 ATM-V-3 ATM-V-5 ATM-V-7 EQ-V-3 MLP-V-3 OLP-V-5	7-48
7-19	Gauge Isolation and Test Needle Valve	OHP-V-202 OHP-V-204 OHP-V-207 OHP-V-208	7-50

Downloaded from http://www.everyspec.com

Figure No.	Item	Label Numbers	Page
7-20	1-Inch Soft Seat Needle Control Valve	EXH-V-6	7-52
7-20A	1-Inch Soft Seat Angle Needle Control Valve	ALP-V-5 ALP-V-13	7-53A
7-21	$^{1}/_{2}$-Inch Needle Valve	OHP-V-201 OHP-V-203	7-54
7-22	HP Air Regulator	AHP-R-108 AHP-R-109	7-56
7-23	HP Oxygen Regulator	OHP-R-205 OHP-R-206	7-58
7-24	BIBS Exhaust Manifold Pressure Regulator	EXH-R-1 EXH-R-2	7-62
7-25	LP Mixed Gas and Oxygen Relief Valve	MLP-V-1 OLP-V-1 OLP-V-3	7-65
7-26	LP Air Reducer Outlet Relief Valve	ALP-V-104 ALP-V-105	7-66
7-27	LP Air Supply Relief Valve	ALP-V-1 ALP-V-7	7-68
7-28	Recompression Chamber Hull Relief Valve	ATM-V-10	7-70
7-29	HP Air Supply Valve	AHP-V-101 AHP-V-102	7-71
7-30	System Gauge	AHP-G-102 AHP-G-103 ALP-G-1 ALP-G-2 ALP-G-3 ALP-G-101 ALP-G-104 MLP-G-1 OHP-G-201 OHP-G-202 OLP-G-1 OLP-G-203 OLP-G-204	7-72
7-31	Depth Gauge	PN-G-1 PN-G-2 PN-G-3 PN-G-4	7-74

Downloaded from http://www.everyspec.com

Figure No.	Item	Label Numbers	Page
7-32	HP Air Supply Filter	AHP-F-1 AHP-F-2	7-75
7-33	LP Air Supply Filter	ALP-F-1 ALP-F-2	7-76
7-34	LP Oxygen and Mixed Gas Supply Filter	OLP-F-1 OLP-F-2 MLP-F-1	7-77

Downloaded from http://www.everyspec.com

7-6 ILLUSTRATIONS AND PARTS LISTS.

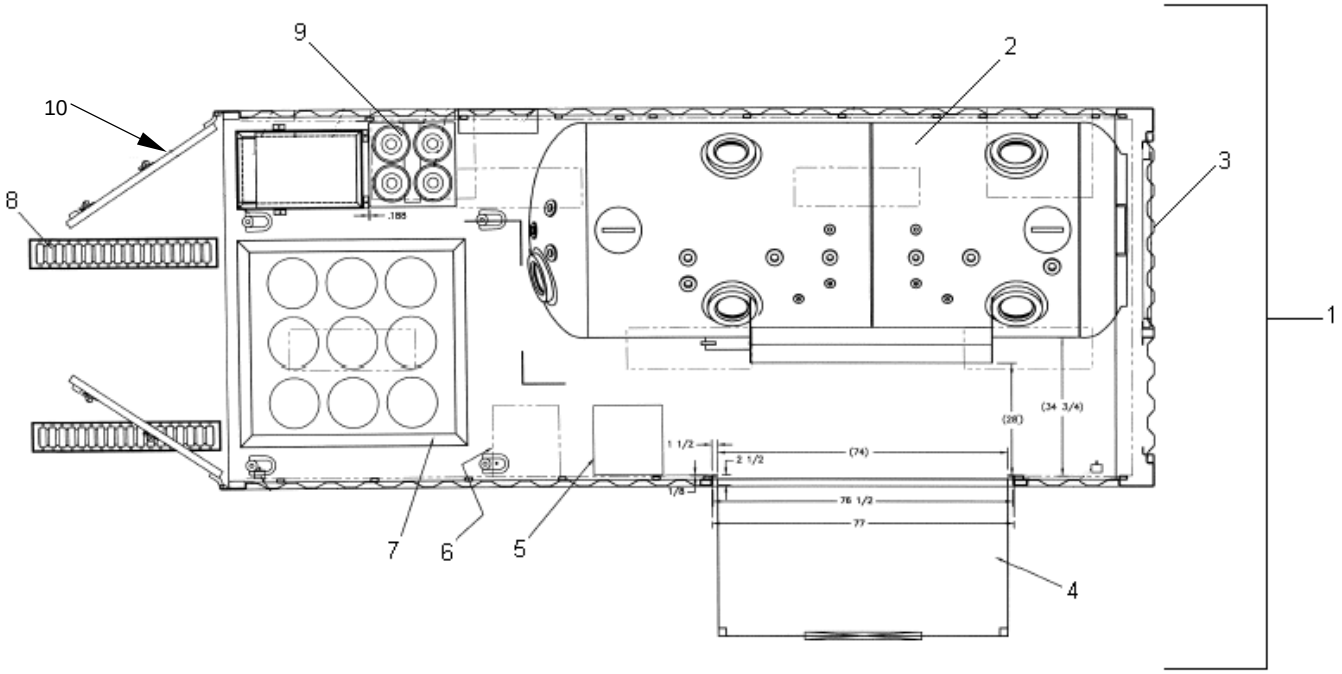

Figure 7-1. SNDLRCS Van – Top View

Table 7-1. Parts List for SNDLRCS Van – Top View

Fig./Index Number	CAGE Code	Part Number	Description	Qty
7-1-1	53711	7539533	SNDLRCS Van	1
-2	53711/ Z9P50	7317720	Standard Navy Double-Lock (SNDL) Recompression Chamber (54 OD x 152 Lg)	1
-3	53711	7539536	Chamber Access Door Assembly	1
-4	53711	7539539	Vestibule	1
-5	53711	7539540-5	Seat	1
-6	53711	7539540-2	Fold-Down Writing Table	1
-7	53711	6961898	Fly Away Dive System (FADS) III Air Supply Rack Assembly	1
-8	53711	7539541-1	Roller Extension Assembly	1
-9	NA	8 BC 300	Oxygen Cylinders (T-Bottles), Department of Transportation (DOT)-3AA-2400	1
-10	53711	7539543	Door-Mounted ASRA HP Air Transition Panel	1*

* Item -10 installed in units manufactured after 2007.

Downloaded from http://www.everyspec.com

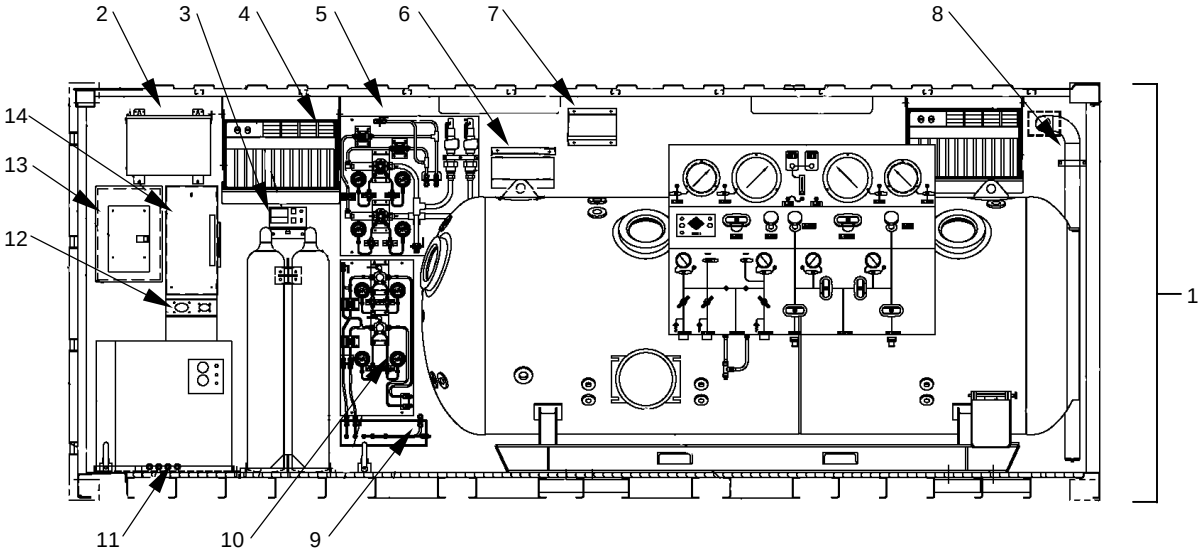

Figure 7-2. SNDLRCS Van – Port Side View

Table 7-2. Parts List for SNDLRCS Van – Port Side View

Fig./Index Number	CAGE Code	Part Number	Description	Qty
7-2-1	53711	7539533	SNDLRCS Van	1
-2	2B109	Y48D28T15N	Transformer	1
-3	0WYU8	UNI-X02IN-11	O_2 Monitor, UNIMAX-II (Lumidor Safety Products, Inc.)	1
-4	7U212	7539566-28	Air Conditioning Unit	1
-5	53711	7539552	HP Air Pressure Reducing Station	1
-6	0MG77	BP650S	Battery Backup (Uninterruptible Power Supply (UPS))	1*
		BR800BLK		
-7	14749	A2H1200	24-volt dc Transformer	1
-8	53711	7539563	Chamber Exhaust System	1
-9	53711	7539543	Bulkhead Transition Panel	1
-10	53711	7539546	Oxygen Pressure Reducing Station	1
-11	8S239	9000-ECS	Environmental Control System (ECS)	1
-12	53711	7539568	Power Connection Panel Assembly	1
-13	2B109	BR1624B100	Power Distribution Panel	1
-14	2B109	DT363UGK	Manual Bus Transfer (MBT) Switch	1

* PN BP650S no longer available for procurement; PN BR800BLK is the replacement.

Downloaded from http://www.everyspec.com

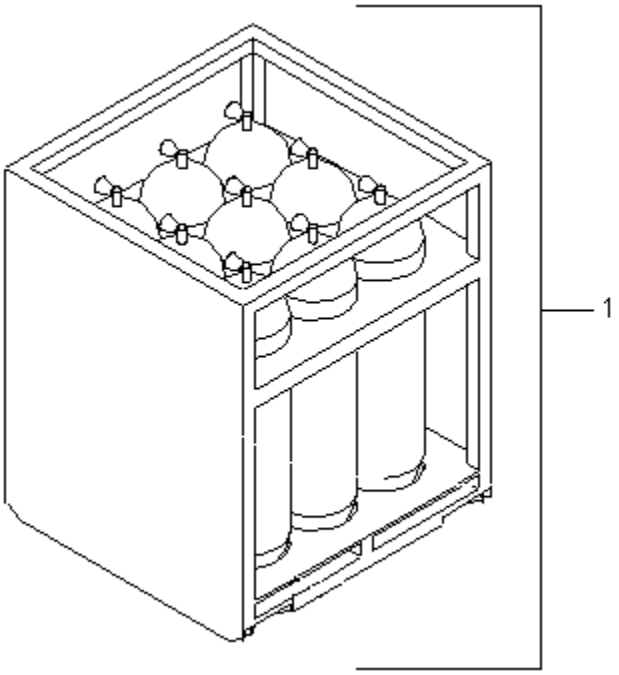

Figure 7-3. Air Supply Rack Assembly (ASRA)

Table 7-3. Parts List for Air Supply Rack Assembly (ASRA)

Fig./Index Number	CAGE Code	Drawing Number	Description	Qty
7-3-1	53711	6961898	Air Supply Rack Assembly (ASRA)	1*

* For a complete parts list breakdown for the Air Supply Rack Assembly, refer to *Fly Away Dive System (FADS III) Air System Technical Manual*, S9592-B1-MMO-010.

Downloaded from http://www.everyspec.com

THIS PAGE INTENTIONALLY LEFT BLANK

Downloaded from http://www.everyspec.com

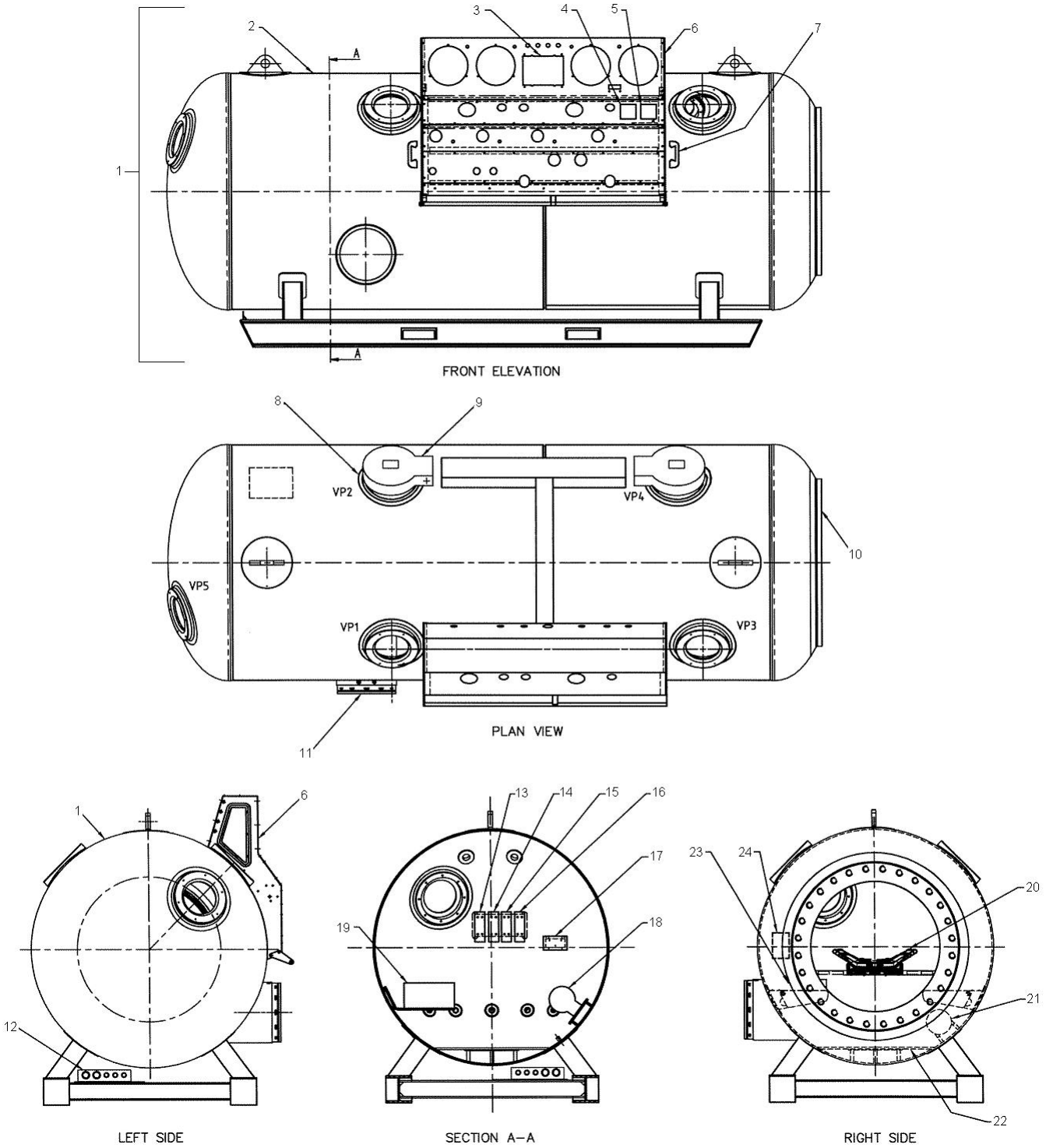

Figure 7-4. Pressure Vessel General Assembly

Downloaded from http://www.everyspec.com

Table 7-4. Parts List for Pressure Vessel General Assembly

Fig./Index Number	CAGE Code	Panel Label	Part Number	Description	Qty
7-4-1	53711	NA	7317730	Vessel Hull Weldment Assembly	1
-2	53711	NA	7317789	Label Identification	1
-3	6S753	NA	2820-4003	Chamber Communications System	1
-4	6S753	NA	MINI O2DII	Oxygen Analyzer	2
-5	6S753	NA	BUDDY-CO2	Carbon Dioxide Analyzer	2
-6	53711	NA	7317801	Console Assembly	1
-7	6S753	NA	H203-U	Sound Powered Phone	2
-8	53711	VP1 VP2 VP3 VP4 VP5	7317760	Ø 200.0 mm Viewport Installation	5
-9	53711	NA	7317815	Chamber Lights	2
-10	53711	NA	7317750	Door Installation	1
-11	53711	NA	7317765	Medlock Installation	1
-12	53711	NA	7317742-11	Pipe Support Bracket	1
-13	53711	NA	7317811-10	Mixed Gas BIBS Manifold	1
-14	53711	NA	7317811-10	Oxygen BIBS Manifold	2
-15	53711	NA	7317811-11	Exhaust BIBS Manifold	2
-16	53711	NA	7317811-11	Air BIBS Manifold	2
-17	6S753	NA	3125	Inner Lock Communications Box	1
-18	6S753	NA	3.80.1018	CO_2 Scrubber Assembly	1*
			6000-2AS		
			5000-2AS		
-19	6S753	NA	9100-ICS2	Environmental Control Unit	1
-20	53711	NA	7317770	Stretcher Installation	1
-21	6S753	NA	Model 240	Chamber Fire Extinguisher	1
-22	53711	NA	7317756	Decking Installation	1
-23	53711	NA	7317784	Seat Installation	5
-24	6S753	NA	3126	Outer Lock Communications Box	1

* CO_2 Scrubbers PN 5000-2AS and 6000-2AS are obsolete. PN 3.80.1018 is the replacement.

Downloaded from http://www.everyspec.com

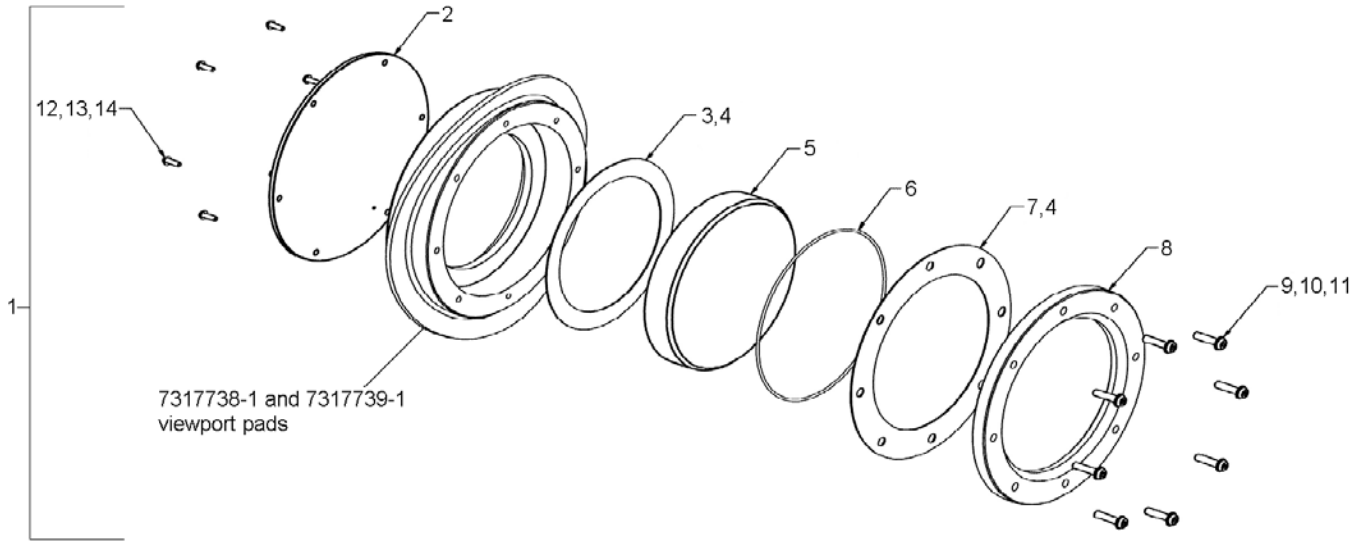

Figure 7-5. Recompression Chamber Viewport

Downloaded from http://www.everyspec.com

Table 7-5. Parts List for Recompression Chamber Viewport

Fig./Index Number	CAGE Code	Panel Label	Part Number	Description	Qty
7-5-1	53711	VP1 VP2 VP3 VP4 VP5	7317760-1	Viewport Installation	1
-2	53711	NA	7317764-1	Viewport Cover	1
-3	53711	NA	7317763-2	Gasket – Viewport Lens	1
-4	20040	NA	847	Adhesive – Contact	AR*
-5	53711	NA	7317761-1	Ø 200.0 mm Viewport Lens	1
-6	02697	NA	2-375 N674-70	O-Ring	1
-7	53711	NA	7317763-1	Gasket – Retaining Ring	1
-8	53711	NA	7317762-1	Retaining Ring	1
-9	NA	NA	NA	Screw, SBHD, .375-16 UNC x 38.0 Lg	8
-10	NA	NA	NA	Washer, Ø .375”	8
-11	NA	NA	NA	Washer, Spring Ø .375”	8
-12	NA	NA	NA	Screw, SBHD, .250-20 UNC x 19.0 Lg	6
-13	NA	NA	NA	Washer, Ø .250”	6
-14	NA	NA	NA	Washer, Spring Ø .250”	6

* As required

Downloaded from http://www.everyspec.com

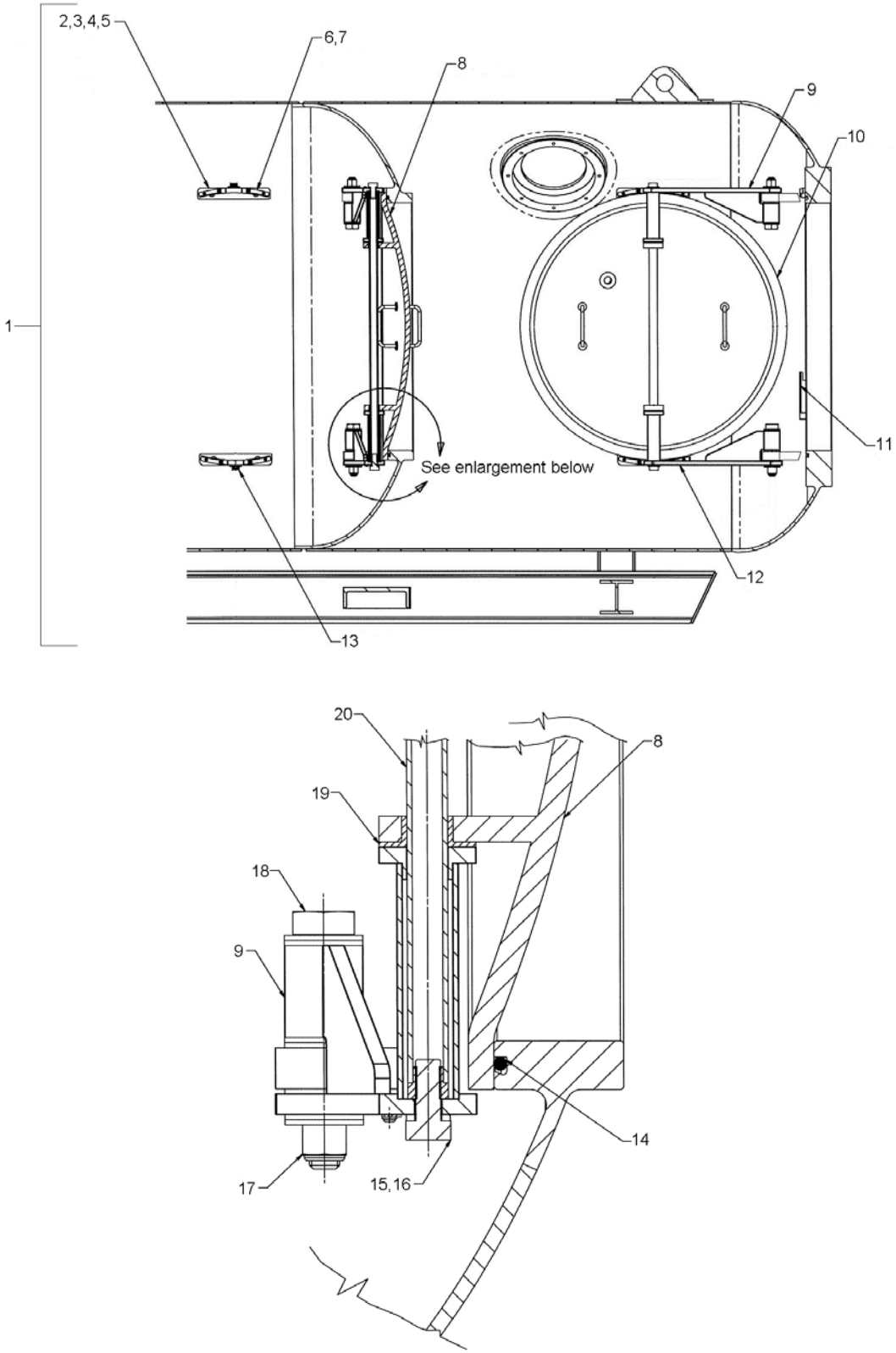

Figure 7-6. Recompression Chamber Doors

Downloaded from http://www.everyspec.com

Table 7-6. Parts List for Recompression Chamber Doors

Fig./Index Number	CAGE Code	Part Number	Description	Qty
7-6-1	53711	7317750	Door Installation	1
-2	53711	7317754-1	Door Support Block – Inner Lock	2
-3	NA	NA	Bolt, Hex, .375-16 UNC x 50.8 Lg	4
-4	NA	NA	Washer, Flat, Ø .375”	4
-5	NA	NA	Bolt, Hex, .375-16 UNC x 101.6	4
-6	53711	7317753-12	Guide	3
-7	NA	NA	Screw, SCHC, #10-24 UNC x 25.4 Lg	8
-8	53711	7317751-1	Door Weldment – Inner Lock	1
-9	53711	7317752-1	Hinge Arm Assembly	2
-10	53711	7317751-2	Door Weldment – Outer Lock	1
-11	53711	7317753-14	Guide – Lower, LH, Outer Lock	1
-12	53711	7317754-2	Door Support Block – Outer Lock	2
-13	NA	18-613 SS	Overcentre Latch	2
-14	02697	NA	O-Ring, Ø 9.53 mm Cord x 782.0 mm i.d.	1
-15	NA	NA	Set Screw, Hex, .625-11 UNC x 38.0 Lg	2
-16	NA	NA	Washer, Spring, Ø .625”	2
-17	NA	NA	Nut, Nyloc, .750-10 UNC	2
-18	53711	7317753-11	Pivot Bolt	2
-19	53711	7317753-5	Flanged Bush – Door	2
-20	53711	7317753-1	Tube Assembly	1

Downloaded from http://www.everyspec.com

.

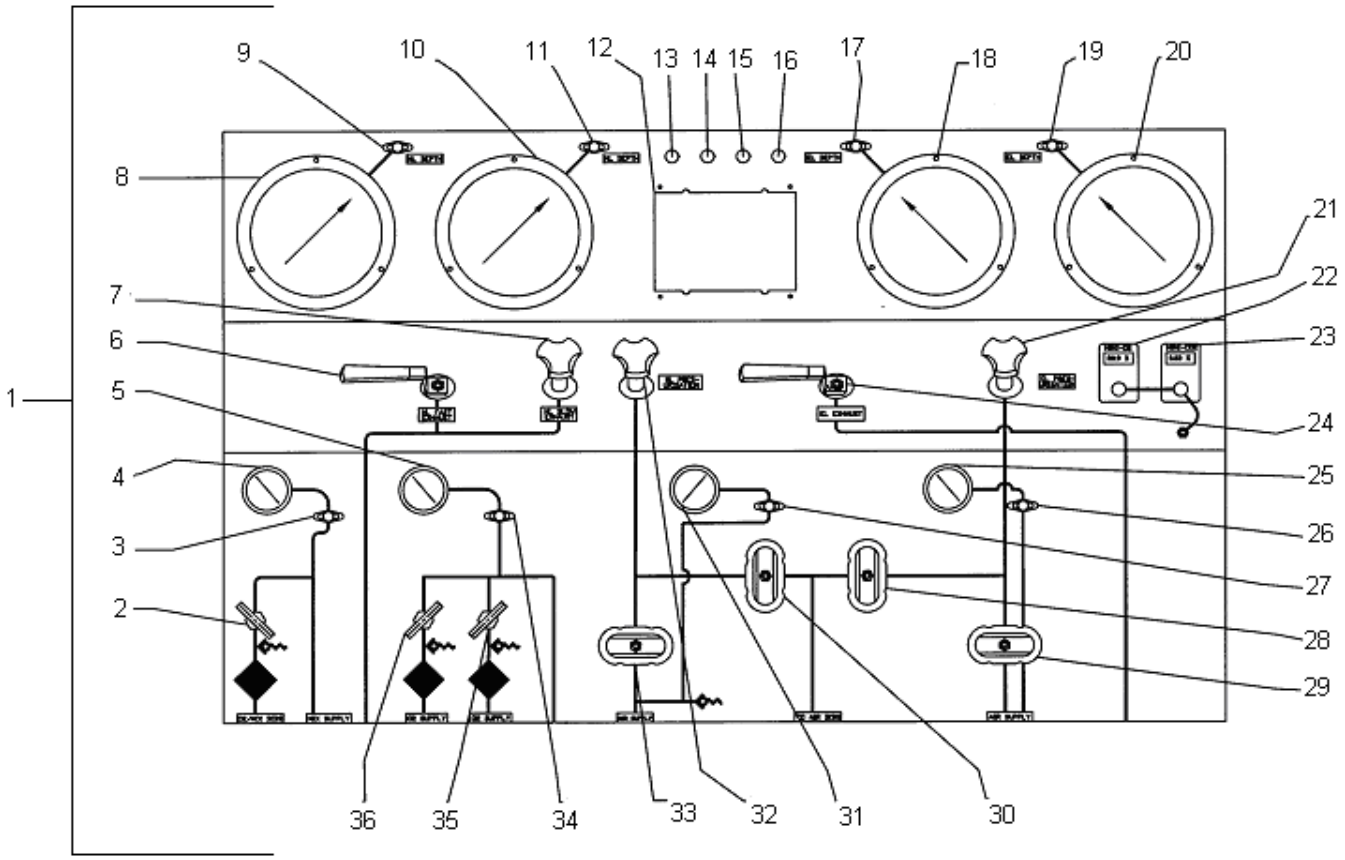

Figure 7-7. Chamber Control Console

Downloaded from http://www.everyspec.com

Table 7-7. Parts List for Chamber Control Console

Fig./ Index Number	CAGE Code	Panel Label	Part Number	Description
7-7-1	53711	NA	7317805	Chamber Control Console
-2	12623	MLP-V-2	B-18VF8-ST	Mixed Gas Supply Valve
-3	99565	MLP-V-3	PLC-10669 / MIL-V-24578B	Gauge Stop Valve
-4	52159	MLP-G-1	25502-27B21GAD-GBK-GCO-GDA	Mixed Gas Pressure Gauge
-5	52159	OLP-G-1	25502-27B21GAD-GBK-GCO-GDA	Oxygen Pressure Gauge
-6	12623	EXH-V-5	SS-67TF24	Fast Exhaust Valve
-7	97399	EXH-V-6	8180515KR	Slow Exhaust Valve
-8	52159	PN-G-2	25546-23B21GAD-GDA-CBE	Inner Lock (IL) Secondary Depth Gauge
-9	99565	ATM-V-3	PLC-10669 / MIL-V-24578B	Gauge Stop Valve
-10	52159	PN-G-1	25546-23B21GAD-GDA-CBE	IL Primary Depth Gauge
-11	99565	ATM-V-1	PLC-10669 / MIL-V-24578B	Gauge Stop Valve
-12	8S239	CHAMBER COMMS	2820-4003	Communication Control
-13	NA	IL LIGHT		IL Light Switch
-14	NA	OL LIGHT		Outer Lock (OL) Light Switch
-15	NA	IL SCRUBBER		IL Scrubber Switch
-16	NA	IL ECS		IL Environmental Control System (ECS) Switch
-17	99565	ATM-V-5	PLC-10669 / MIL-V-24578B	Gauge Stop Valve
-18	52159	PN-G-3	25546-23B21GAD-GDA-CBE	OL Primary Depth Gauge
-19	99565	ATM-V-7	PLC-10669 / MIL-V-24578B	Gauge Stop Valve
-20	52159	PN-G-4	25546-23B21GAD-GDA-CBE	OL Secondary Depth Gauge
-21	97399	ALP-V-13	A8187515KR	OL Pressurization Valve
-22	U5730	NA	100M	Oxygen Analyzer
-23	U5730	NA	501-5B	Carbon Dioxide Analyzer
-24	12623	EXH-V-8	SS-67TF24	OL Exhaust Valve

Downloaded from http://www.everyspec.com

Table 7-7. Parts List for Chamber Control Console (contd)

Fig./Index Number	CAGE Code	Panel Label	Part Number	Description
-25	52159	ALP-G-2	25502-27B21GAD-GCL-GCO-GDA	Secondary Supply Gauge
-26	99565	ALP-V-8	PLC-10669 / MIL-V-24578B	Gauge Stop Valve
-27	99565	ALP-V-2	PLC-10669 / MIL-V-24578B	Gauge Stop Valve
-28	12623	ALP-V-10	B-65TF16	Ball Valve
-29	12623	ALP-V-9	B-65TF16	Air Supply Valve
-30	12623	ALP-V-4	B-65TF16	Ball Valve
-31	52159	ALP-G-1	25502-27B21GAD-GCL-GCO	Primary Supply Gauge
-32	97399	ALP-V-5	A8187515KR	IL Pressurization Valve
-33	12623	ALP-V-3	B-65TF16	Primary Supply Valve
-34	99565	OLP-V-5	PLC-10669 / MIL-V-24578B	Gauge Stop Valve
-35	12623	OLP-V-4	B-18VF8-G	Secondary Oxygen Supply Valve
-36	12623	OLP-V-2	B-18VF8-G	Primary Oxygen Supply Valve
Not Shown*	12623	ATM-V-2	B-62TF4	2-Way Ball Valve
Not Shown*	12623	ATM-V-4	B-62TF4	2-Way Ball Valve
Not Shown*	12623	ATM-V-6	B-62TF4	2-Way Ball Valve
Not Shown*	12623	ATM-V-8	B-62TF4	2-Way Ball Valve
Not Shown*	12623	ATM-V-11	B-62TF4	2-Way Ball Valve
Not Shown*	12623	ATM-V-12	B-62TF4	2-Way Ball Valve
Not Shown*	12623	ATM-V-13	B-62TF4	2-Way Ball Valve
Not Shown*	12623	ATM-V-14	B-62TF4	2-Way Ball Valve

* Valves are located behind the top of the Chamber Control Console.

Downloaded from http://www.everyspec.com

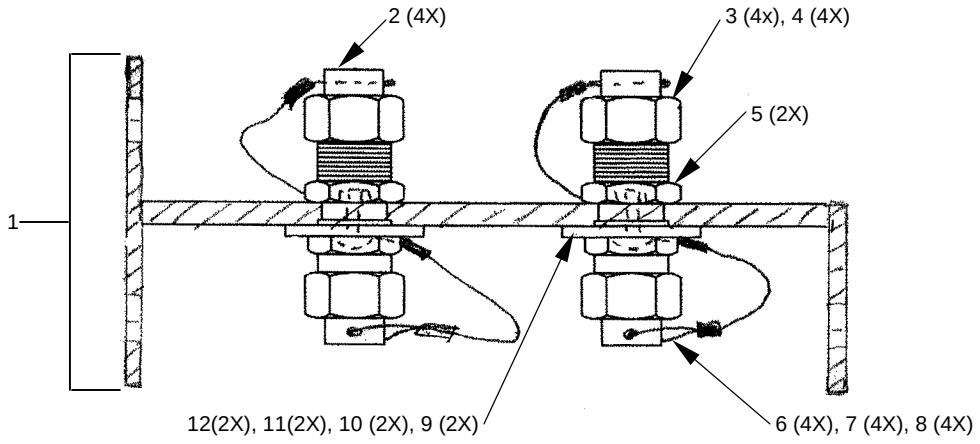

Figure 7-7A. Door Mounted ASRA HP Air Transition Panel

Table 7-7A. Parts List for Door Mounted ASRA HP Air Transition Panel

Fig./Index Number	CAGE Code	Part Number	Description	Qty
7-7A-1	53711	NA	ASRA HP Air Transition Panel	1*
-2	99565	H804R-8-SS	Tailpiece, Blank	4
-3	99565	H850N-8-SS	Nut, Tube	4
-4	NA	AS3581-015	O-Ring, FLUO	4
-5	99565	H890T-8-SS	Union, Bulkhead	2
-6	NA	NA	Wire, Coated (Lanyard), 0.033/0.030, SS	4
-7	NA	NA	Crimp, Sleeve	4
-8	NA	NA	Crimp, Eye	4
-9	53711	7539543-2	Anti-Rotational Hex Stop	2
-10	NA	NA	Screw, Panhead, 0.190-24UNC, SS	2
-11	NA	NA	Washer, Flat, Stainless, 0.190, SS	2
-12	NA	NA	Nut, Self-Locking, 0.190-24UNC, SS	2
-13	53711	7539564-116	Hose Assembly, ASRA	2**

* This panel is an added item on SNDLRCS units constructed after 2007.
** Item -13 not shown.

Downloaded from http://www.everyspec.com

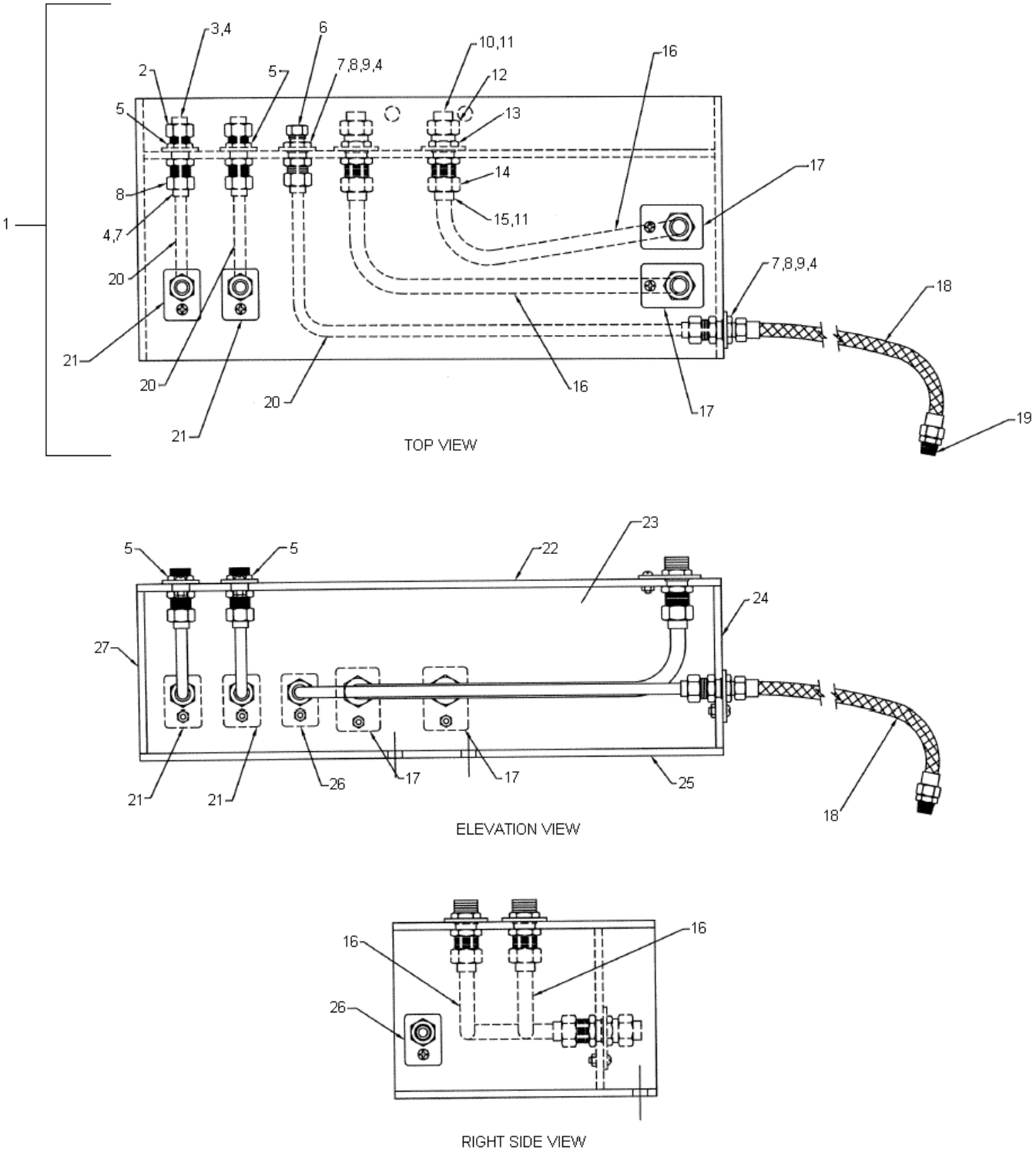

Figure 7-8. Bulkhead Transition Panel

Downloaded from http://www.everyspec.com

Table 7-8. Parts List for Bulkhead Transition Panel

Fig./Index Number	CAGE Code	Part Number	Description	Qty
7-8-1	53711	7539543-1	Bulkhead Transition Panel Assembly	1
-2	99565	H850N-6-NAB	Nut, Tube	2
-3	99565	H804R-6-SS	Tailpiece, Blank	2
-4	NA	M83248/2-013	O-Ring	8
-5	99565	H890T-6-SS	Union, Bulkhead	4
-6	79926	AJ6Z-2	Cap, Tube	1
-7	99565	H849R-6-SS	Tailpiece, Tube	6
-8	99565	H850N-6-SS	Nut, Tube	6
-9	79926	J6-6PBU	Union, Bulkhead	2
-10	99565	H804R-8-SS	Tailpiece, Blank	2
-11	NA	M83248/2-015	O-Ring	8
-12	99565	H850N-8-NAB	Nut, Tube	2
-13	99565	H8980T-8-SS	Union, Bulkhead	4
-14	99565	H850N-8-SS	Nut, Tube	4
-15	99565	H849R-8-SS	Tailpiece, Tube	4
-16	NA	NA	Tube, .50” o.d. x .065” Wall, Seamless, 316L	AR*
-17	53711	7539543-2	Air Anti-Rotational Hex Stop	4
-18	53711	7539564-107	Hose Assembly	1
-19	79926	J6-8C	Connector, Male	1
-20	NA	NA	Tube, .375” o.d. x .065” Wall, Seamless, 316L	AR*
-21	53711	7539543-3	Oxygen Anti-Rotational Hex Stop	4
-22	53711	7539543-7	Top Plate	2
-23	53711	7539543-5	Bulkhead Plate	1
-24	53711	7539543-6	Right Side Plate	1
-25	53711	7539543-8	Bottom Plate	1
-26	53711	7539543-4	Mixed Gas Anti-Rotational Hex Stop	2
-27	53711	7539543-9	Left Side Plate	1

* As required

Downloaded from http://www.everyspec.com

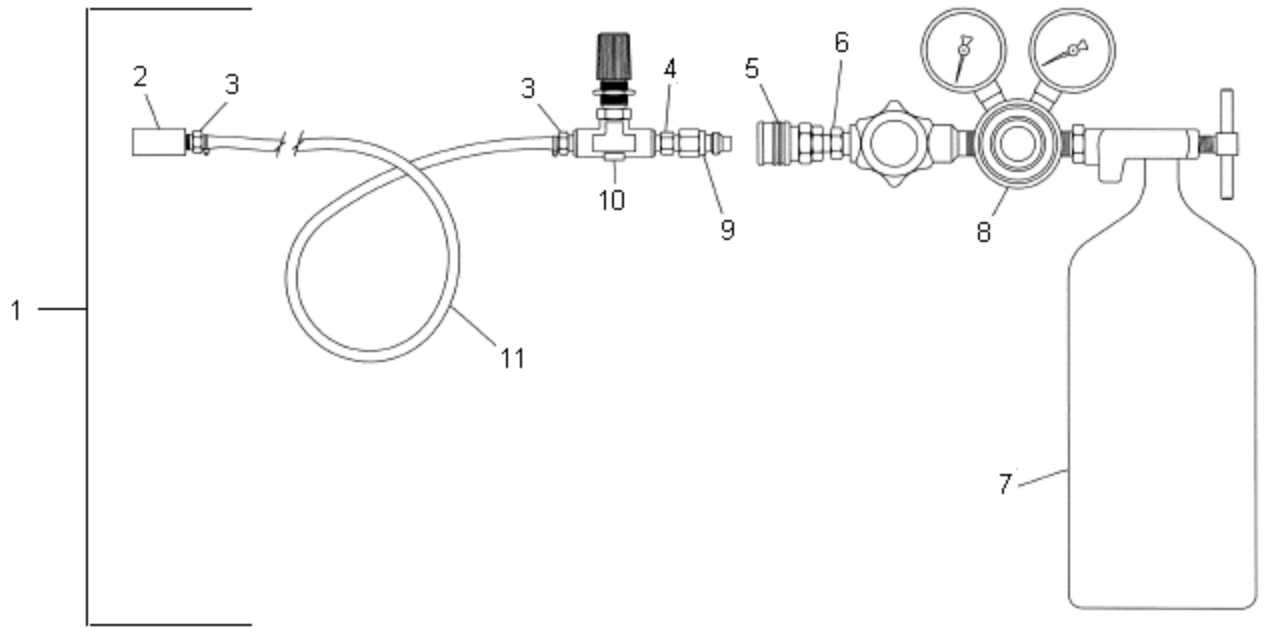

Figure 7-9. O_2/CO_2 Calibration Gas Kit

Table 7-9. Parts List for O_2/CO_2 Calibration Gas Kit

Fig./Index Number	CAGE Code	Part Number	Description	Qty
7-9-1	53711	7539544	O_2/CO_2 Calibration Gas Kit	1
-2	45681	2F-Q49-BB	Quick Coupling	1
-3	45681	2-2-B2HF-B	Hose Barb, $^1/_8$" MNPT	2
-4	45681	2-2MHN-B	Connector, $^1/_8$" NPT	1
-5	6S753	18969-00	BIBS QD	1
-6	45681	4-2RB-B	Brass Hose Adapter	1
-7	51847	0304930SR	Calibration Gas	1
-8	51847	51C04F973	Regulator	1
-9	6S753	18970-00	BIBS Male QD	1
-10	45681	2F-H4L-V-SS-K	Fine Metering Valve	1
-11	6S753	96419-16	Silicone Tubing	8

Downloaded from http://www.everyspec.com

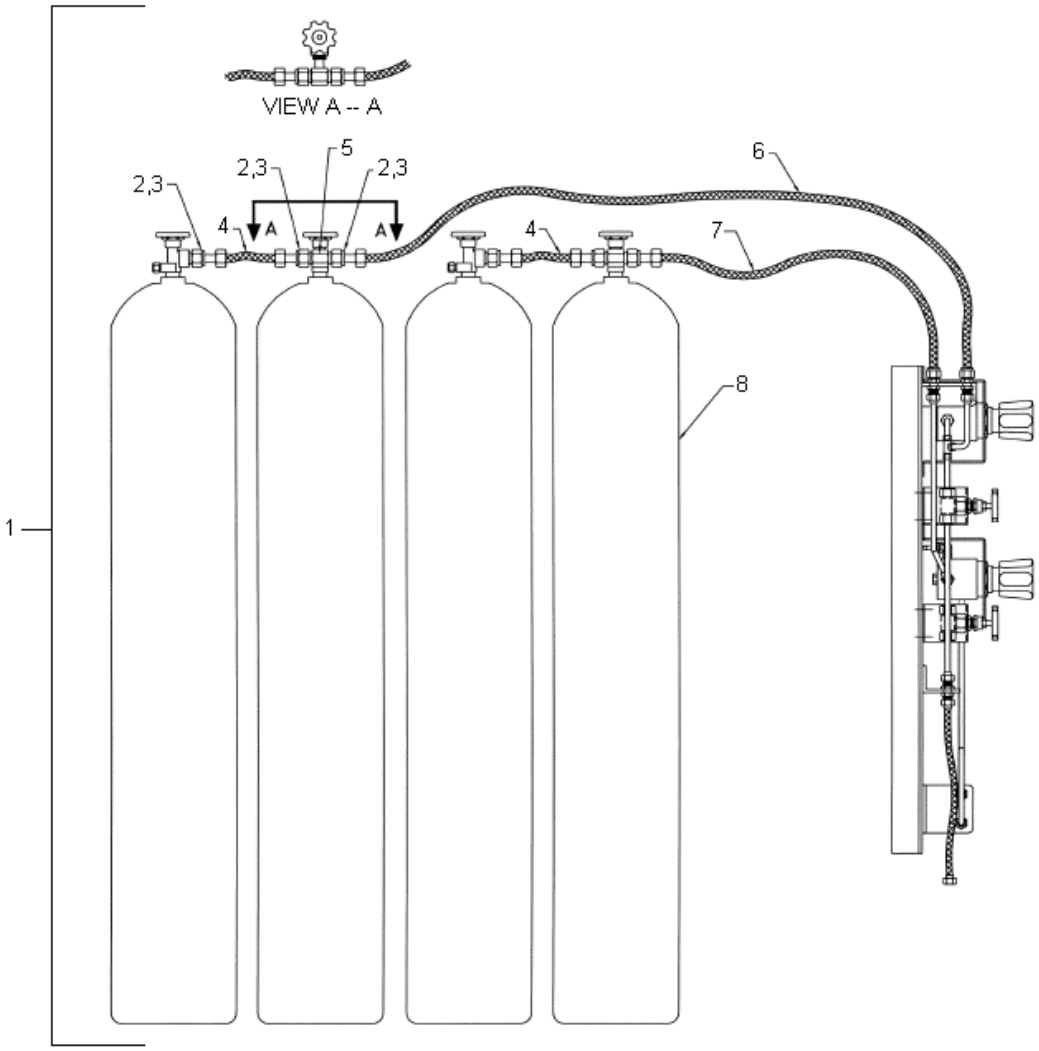

Figure 7-10. Oxygen Reducing Station – Oxygen Bottles

Table 7-10. Parts List for Oxygen Reducing Station – Oxygen Bottles

Fig./Index Number	CAGE Code	Part Number	Description	Qty
7-10-1	53711	7539546	Oxygen Bottles for Oxygen Reducing Station	4
-2	16166	663	Nipple, Soft Seat, Compressed Gas Association (CGA) 540	6
-3	16166	62	Nut, CGA 540	6
-4	53711	7539564-101	Hose Assembly, .25”	2
-5	16166	T-62	Tee, Manifold Coupler, CGA 540	2
-6	53711	7539564-103	Hose Assembly, .375”	1
-7	53711	7539564-102	Hose Assembly, .375”	1
-8	NA	8BC300	Bottle, Oxygen w/CGA-540 Valve	4

Downloaded from http://www.everyspec.com

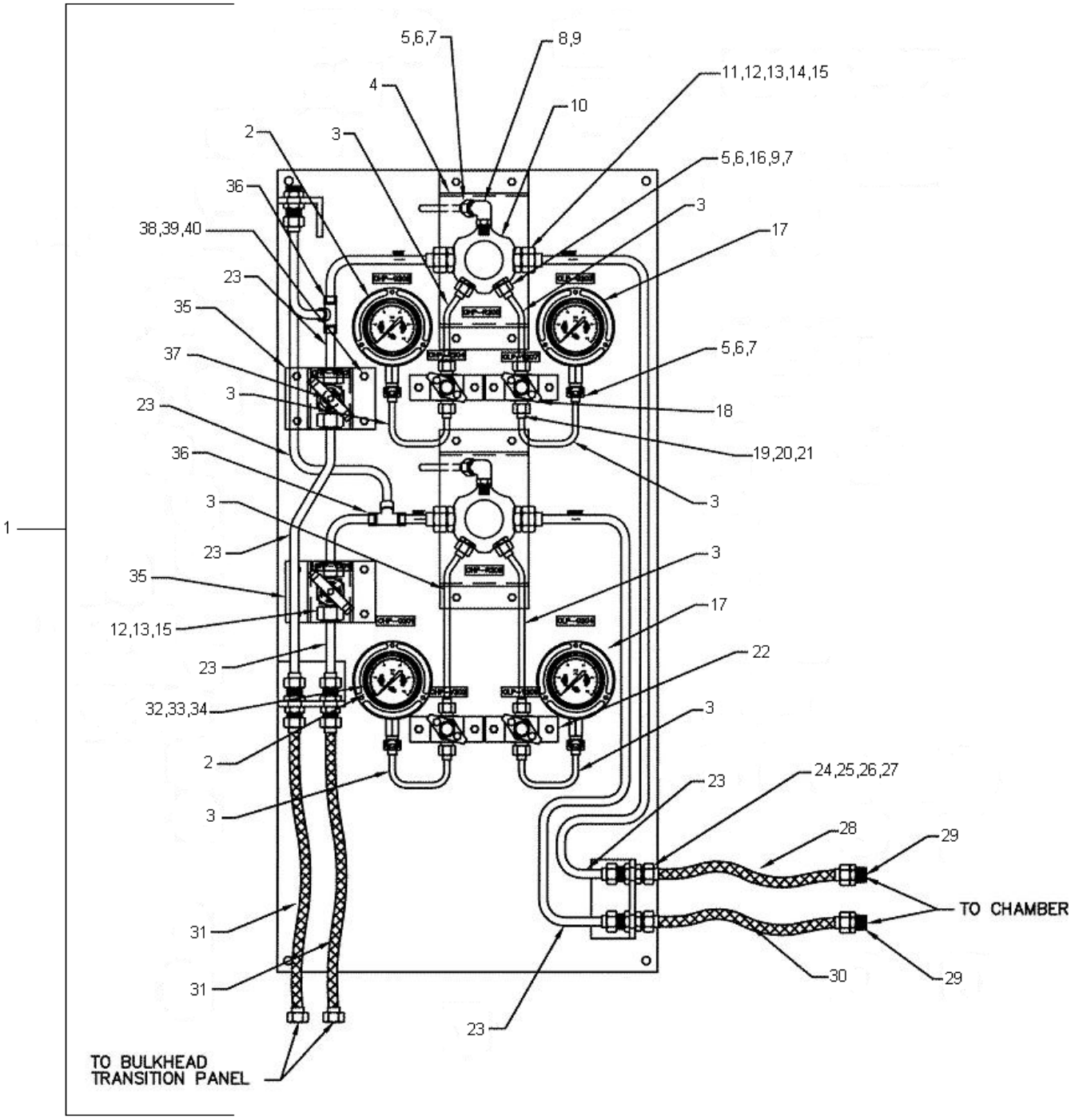

Figure 7-11. Oxygen Reducing Station Panel

Downloaded from http://www.everyspec.com

Table 7-11. Parts List for Oxygen Reducing Station Panel

Fig./Index Number	CAGE Code	Label Number	Part Number	Description	Qty
7-11-1	53711	NA	7539546	Oxygen Reducing Station Panel Assembly	1
-2	52159	OHP-G-201 OHP-G-202	25502-34B31MCD	Gauge, Pressure, 2.5” Diameter, 0-4000 psig	1
-3	NA	NA	NA	Tube, .25” o.d. x .065” Wall, Seamless, 316L	AR*
-4	NA	NA	NA	Bracket, Mounting, Regulator	2
-5	11649	NA	SS-4-VCO-4	Nut, Tube	10
-6	11649	NA	SS-4-VCO-3	Gland, Tube	10
-7	NA	NA	M83248/2-010	O-Ring	10
-8	11649	NA	SS-4-VCO-9P-4ST	Elbow, Positionable	2
-9	NA	NA	M83248/2-904	O-Ring	6
-10	13669	OHP-R-205 OHP-R-206	44F5417T308-001	Regulator	2
-11	11649	NA	SS-8-VCO-1-8ST	Connector, Male, Tube	4
-12	11649	NA	SS-6-VCO-3	Gland, Reducing, Tube	8
-13	11649	NA	SS-8-VCO-4	Nut, Tube	8
-14	NA	NA	M83248/2-908	O-Ring	4
-15	NA	NA	M83248/2-111	O-Ring	8
-16	11649	NA	SS-4-VCO-1-4ST	Connector, Male, Tube	4
-17	52159	OLP-G-203 OLP-G-204	25502-27B31MCD	Gauge, Pressure, 2.5” Diameter, 0-500 psig	2
-18	99565	OHP-V-202 OHP-V-204 OHP-V-207 OHP-V-208	PLC-11095 L/F	Valve, Gauge Stop	4
-19	99565	NA	949R-4-SS	Tailpiece, Tube	8
-20	99565	NA	950N-4-SS	Nut, Tube	8
-21	NA	NA	M83248/2-008	O-Ring	8
-22	NA	NA	NA	Bracket, Mounting, Gauge Stop Valve	4
-23	NA	NA	NA	Tube, .375” o.d. x .049” Wall, Seamless, 316L	AR*
-24	99565	NA	H890T-6-SS	Union, Bulkhead	6
-25	99565	NA	H849R-6-SS	Tailpiece, Tube	6
-26	99565	NA	H850N-6-SS	Nut, Tube	6

* As required

Downloaded from http://www.everyspec.com

Table 7-11. Parts List for Oxygen Reducing Station Panel (contd)

Fig./Index Number	CAGE Code	Label Number	Part Number	Description	Qty
-27	NA	NA	M83248/2-013	O-Ring	12
-28	53711	NA	7539564-105	Hose Assembly, .375”	1
-29	99565	NA	H854T-6-B	Connector, Male Tube	2
-30	53711	NA	7539564-106	Hose Assembly, .375”	2
-31	53711	NA	7539564-104	Hose Assembly, .375”	2
-32	NA	NA	NA	Screw, Phillips Pan Head, #6-32 x 1”	12
-33	NA	NA	NA	Washer, Flat #6 Nom	12
-34	NA	NA	NA	Washer, Lock #6 Nom	12
-35	NA	NA	NA	Bracket, Mounting, Needle Valve	2
-36	11649	NA	SS-6-TSW-3	Tee, $^{3}/_{8}$” Tube	2
-37	12623	OHP-V-201 OHP-V-203	M-6NRVCO8-M	Valve, Shutoff	2
-38	NA	NA	NA	Screw, Hex Head Cap, ¼” – 20 x 1”	32
-39	NA	NA	NA	Washer, Flat, $^{1}/_{4}$” Nom	32
-40	NA	NA	NA	Washer, Lock, $^{1}/_{4}$” Nom	32

Downloaded from http://www.everyspec.com

THIS PAGE INTENTIONALLY LEFT BLANK

Downloaded from http://www.everyspec.com

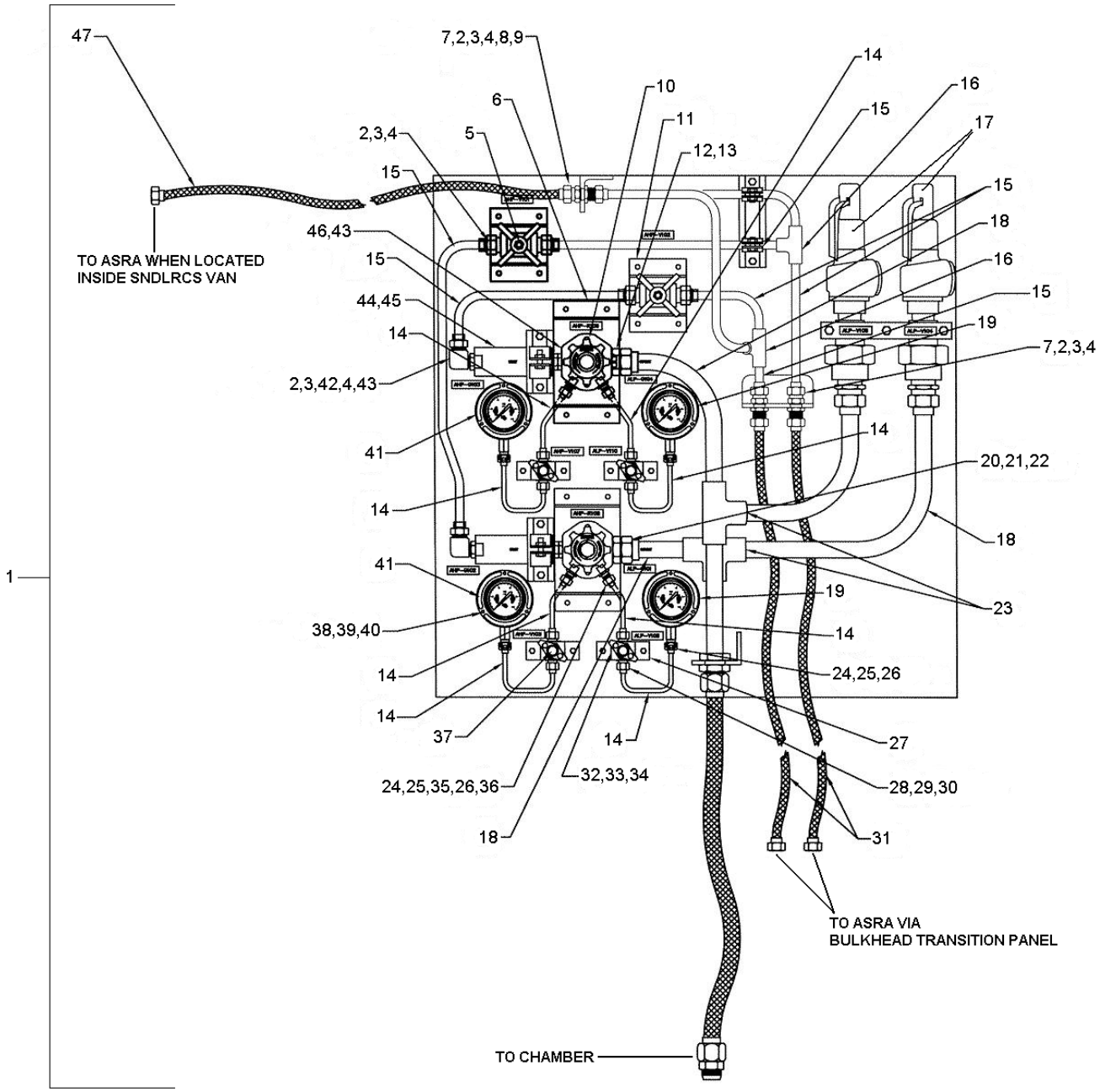

Figure 7-12. High-Pressure (HP) Air Reducing Station – Front View

Downloaded from http://www.everyspec.com

Table 7-12. Parts List for HP Air Reducing Station – Front View

Fig./Index Number	CAGE Code	Label Number	Part Number	Description	Qty
7-12-1	53711	NA	7539555	HP Air Reducing Station Panel Assembly	1
-2	99565	NA	H849R-8-SS	Tailpiece, Tube	10
-3	99565	NA	H850N-8-SS	Nut, Tube	12
-4	NA	NA	M83248/2-015	O-Ring	14
-5	99565	AHP-V-101 AHP-V-102	G2SGM8-08-C	Valve, Shutoff	2
-6	NA	NA	NA	Bracket, Mounting, Regulator	2
-7	99565	NA	H890T-8-SS	Union, Bulkhead	4
-8	99565	NA	H804R-8-SS	Tailpiece, Blank	2
-9	99565	NA	H850N-8-NAB	Nut, Union	2
-10	13669	AHP-R-108 AHP-R-109	44F1323-0812-262	Regulator	2
-11	NA	NA	NA	Bracket, Mounting, Needle Valve	2
-12	99565	NA	H859T-16-12-SS	Connector, Male, Tube	2
-13	NA	NA	M83248/2-912	O-Ring	2
-14	NA	NA	NA	Tube, .25” o.d. x .065” Wall, Seamless, 316L	AR**
-15	NA	NA	NA	Tube, .50” o.d. x .083” Wall, Seamless, 316L	AR**
-16	11649	NA	SS-8-TSW-3	Tee, Socket Weld	2
-17	57661	ALP-V-104 ALP-V-105	521FEBKV0300 or 521FEBZMX1	Relief Valve, 1” Male NPT	2
-18	NA	NA	NA	Tube, 1.00” o.d. x .065” Wall, Seamless, 316L	AR**
-19	52159	ALP-G-101 ALP-G-104	25502-28B31MCD	Gauge, Pressure, 2.5” Diameter, 0-600 PSI	2
-20	99565	NA	H849R-16-SS	Tailpiece, Tube	4
-21	99565	NA	H850N-16-SS	Nut, Tube	4
-22	NA	NA	M83248/2-022	O-Ring	4
-23	79926	NA	16 SWT-SS	Tee, Socket Weld	2
-24	11649	NA	SS-4-VCO-4	Nut, Tube	8
-25	11649	NA	SS-4-VCO-3	Gland, Tube	8
-26	NA	NA	M83248/2-010	O-Ring	8
-27	NA	NA	NA	Bracket, Mounting, Gauge Stop Valve	4

Downloaded from http://www.everyspec.com

Table 7-12. Parts List for HP Air Reducing Station – Front View (contd)

Fig./Index Number	CAGE Code	Label Number	Part Number	Description	Qty
-28	99565	NA	949R-4-SS	Tailpiece, Tube	8
-29	99565	NA	950N-4-SS	Nut, Tube	8
-30	NA	NA	M83248/2-008	O-Ring	8
-31	53711	NA	7539564-108	Hose Assembly, .375”	2
-32	NA	NA	NA	Screw, Hex Head, Cap, ¼”-20 x 1”	26
-33	NA	NA	NA	Washer, Flat, ¼” Nom	26
-34	NA	NA	NA	Washer, Lock, ¼” Nom	26
-35	11649	NA	SS-4-VCO-1-4ST	Connector, Male Tube	4
-36	NA	NA	M83248/2-904	O-Ring	4
-37	99565	AHP-V-103 AHP-V-106 AHP-V-107 AHP-V-110	PLC-10699	Valve, Gauge Stop	4
-38	NA	NA	NA	Screw, Phillips Pan Head, #6-32 x 1”	12
-39	NA	NA	NA	Washer, Flat, #6 Nom	12
-40	NA	NA	NA	Washer, Lock #6 Nom	12
-41	52159	AHP-G-102 AHP-G-103	25502-37B31MCD	Gauge, Pressure, 2.5” Diameter, 0-8000 PSI	2
-42	99565	NA	H823T-8-8-SS	Elbow, Tube	2
-43	NA	NA	M83248/2-908	O-Ring	6
-44	59165	NA	U-10007	Filter Element	2
-45	59165	NA	U-956	Filter	2
-46	NA	NA	3474-08-08-NWO-SS	Connector, Male Tube	2
-47	53711	NA	7539564-116	Hose Assembly	2*

* These hoses are optional. They are used only when the Air Supply Rack Assembly (ASRA) is left inside the SNDLRCS container during chamber operation and the bulkhead transition panel is bypassed.

** As required. The minimum bend radius for this wall thickness tubing is 4 X O.D. or larger.

Downloaded from http://www.everyspec.com

THIS PAGE INTENTIONALLY LEFT BLANK

Downloaded from http://www.everyspec.com

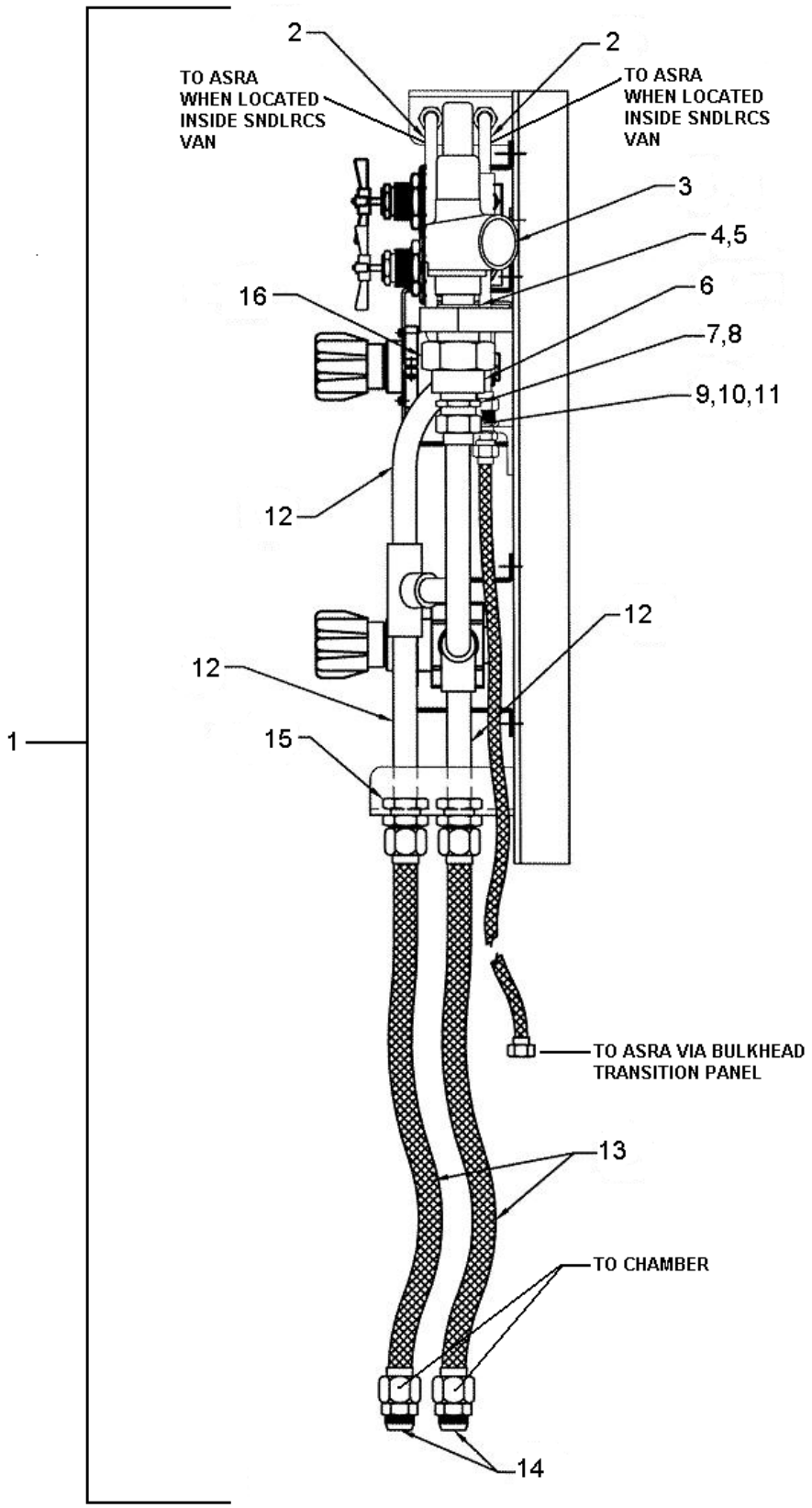

Figure 7-13. HP Air Reducing Station – Side View

Downloaded from http://www.everyspec.com

Table 7-13. Parts List for HP Air Reducing Station – Side View

Fig./Index Number	CAGE Code	Label Number	Part Number	Description	Qty
7-13-1	53711	NA	7539555	HP Air Reducing Station Panel Assembly	1
-2	NA	NA	NA	Tube, .50” o.d. x .083” Wall, Seamless, 316L	AR*
-3	57661	ALP-V-104 ALP-V-105	521FEBKV0300 or 521FEBZMX1	Relief Valve, 1” Male NPT	2
-4	99565	NA	53R-5-SS	Tailpiece	2
-5	NA	NA	M83248/2-217	O-Ring	2
-6	99565	NA	64T-5-4-SS	Connector, Female Straight Thread	2
-7	NA	NA	M83248/2-916	O-Ring	2
-8	99565	NA	H859T-16-16-SS	Connector, Male Straight Thread	2
-9	99565	NA	H849R-16-SS	Tailpiece, Tube	4
-10	99565	NA	H850N-16-SS	Nut, Tube	4
-11	NA	NA	M83248/2-022	O-Ring	4
-12	NA	NA	NA	Tube, 1.00” o.d. x .065” Wall, Seamless, 316L	AR*
-13	53711	NA	7539564-109	Hose Assembly 1.0”	2
-14	79926	NA	J16-C	Connector, Male JIC	2
-15	53711	NA	7539556-1	Altered Item	2
-16	99565	NA	50N-5-NAB	Nut, Union	2

* As required. The minimum bend radius for this wall thickness tubing is 4 X O.D. or larger.

Downloaded from http://www.everyspec.com

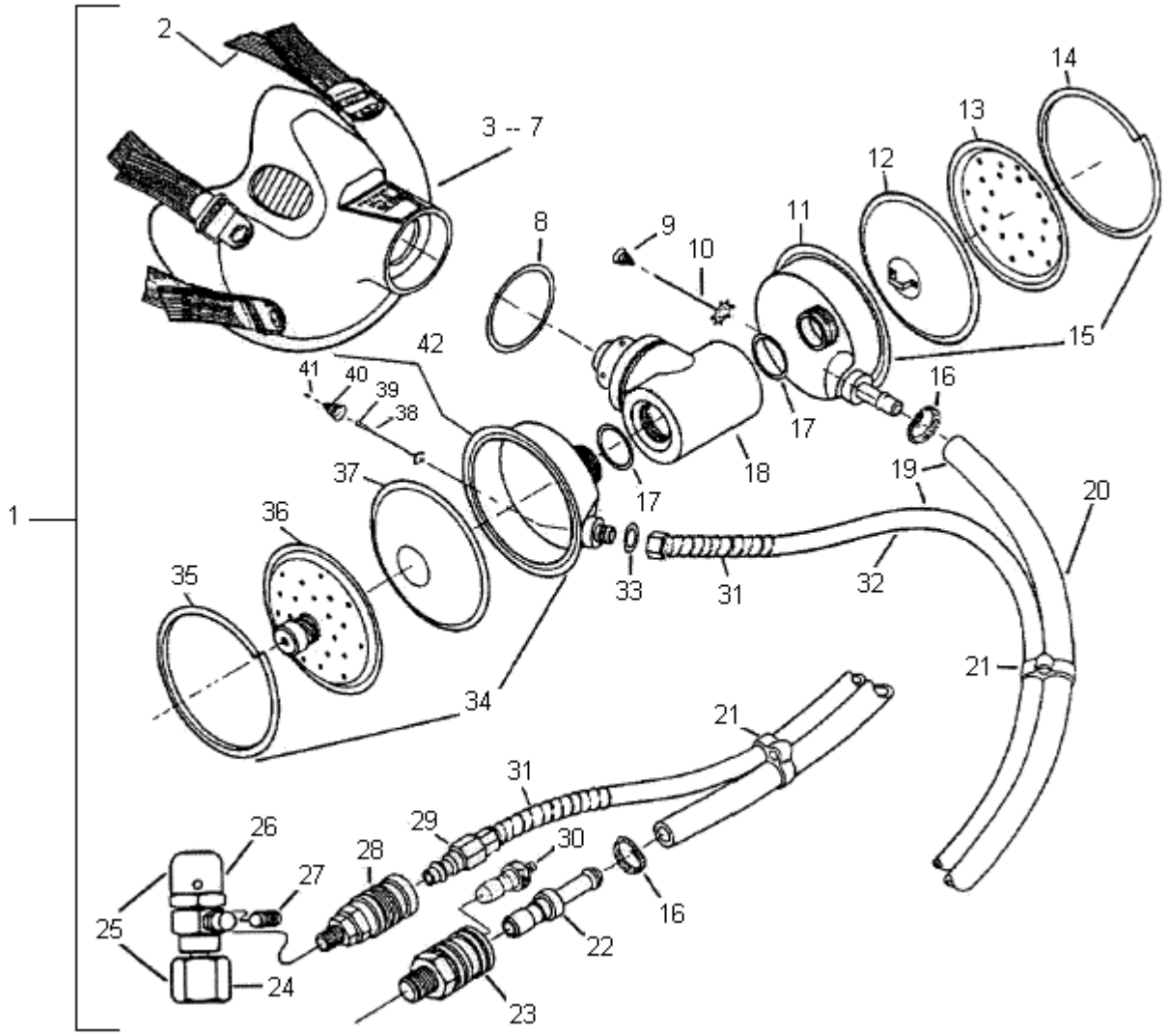

Figure 7-14. Built-In Breathing System (BIBS) Mask

Downloaded from http://www.everyspec.com

Table 7-14. Parts List for BIBS Mask

Fig./Index Number	CAGE Code	Part Number	Description	Qty
7-14-1	017E4	NA	Built-In Breathing System (BIBS) Mask	1
	NA	803139-00-02	Scott Pressur Vak® II Inhaler	
-2	017E4	803115-01	Head Strap (Elastic)	1
-3	017E4	803152-01	Face Seal & Harness Assembly, Size Small	1
-4	017E4	803152-02	Face Seal & Harness Assembly, Size Medium	1
-5	017E4	803152-03	Face Seal & Harness Assembly, Size Large	1
-6	017E4	803152-04	Face Seal & Harness Assembly, Size Extra Large	1
-7	017E4	803152-05	Face Seal & Harness Assembly, Size Extra Small	1
-8	017E4	21506-01	O-Ring, Manifold to Face Seal	1
-9	017E4	13796-00	Spring, Exhalation Valve	1
-10	017E4	800963-00	Valve, Exhalation	1
-11	017E4	801275-00	Case Assembly, Exhaust Regulator	1
-12	017E4	801272-00	Diaphragm and Stem Guide Assembly	1
-13	017E4	100003027	Cover, Exhaust Regulator	1
-14	017E4	26010-01	Clamp, Regulator Cover	1
-15	017E4	801274-00	Exhaust Regulator Assembly	1
-16	017E4	20433-00	Hose Clamp	2
-17	017E4	18062-00	O-Ring, Manifold to Regulators	2
-18	017E4	803100-01	Manifold Assembly	1
-19	017E4	803166-10	Dual Hose Assembly, with 23 and 28	1
-20	017E4	59719-10	Exhaust Hose Assembly, Complete with 16 and 23	1
-21	017E4	10002573	Hose Grommet	3
-22	017E4	59852-00	Hose Plug, Exhaust Hose	1
-23	017E4	59853-00	Quick Disconnect, Exhaust $^{3}/_{8}$" NPT, Brass	1
-24	017E4	8580-00	Coupling, Oxygen	1
-25	017E4	801804-00	Pressure Reducing Regulator	1
-26	017E4	58370-00	Reducing Regulator Only	1

Downloaded from http://www.everyspec.com

Table 7-14. Parts List for BIBS Mask (contd)

Fig./Index Number	CAGE Code	Part Number	Description	Qty
-27	017E4	6818-3	Plug, $^{1}/_{8}$", Reducing Regulator, Brass	1
		6818-01	Plug, $^{1}/_{8}$", Reducing Regulator, Stainless Steel	
-28	017E4	18969-00	Quick Disconnect, Demand $^{1}/_{8}$" NPT, Brass	1
-29	017E4	18970-00	Hose Plug, Demand Hose	1
-30	017E4	B-6QDP	Plug for Exhaust QD (Optional)	1
-31	017E4	C.055	Spring, Spiral	2
-32	017E4	26037-10	Demand Hose Assembly with 28 and 33	1
-33	017E4	2827-49	Gasket, Demand Hose	1
-34	017E4	800954-01	Demand Regulator Assembly	1
-35	017E4	26010-01	Clamp, Regulator Cover	1
-36	017E4	801276-00	Cover, Demand Regulator	1
-37	017E4	26004-01	Diaphragm, Demand Regulator	1
-38	017E4	NA	Valve Stem	1
-39	017E4	NA	Spring	1
-40	017E4	NA	Valve Clamp	1
-41	017E4	NA	Bearing Spring	1
-42	017E4	800956-01	Case Assembly, Includes 38, 39, 40 and 41	1

Downloaded from http://www.everyspec.com

THIS PAGE INTENTIONALLY LEFT BLANK

Downloaded from http://www.everyspec.com

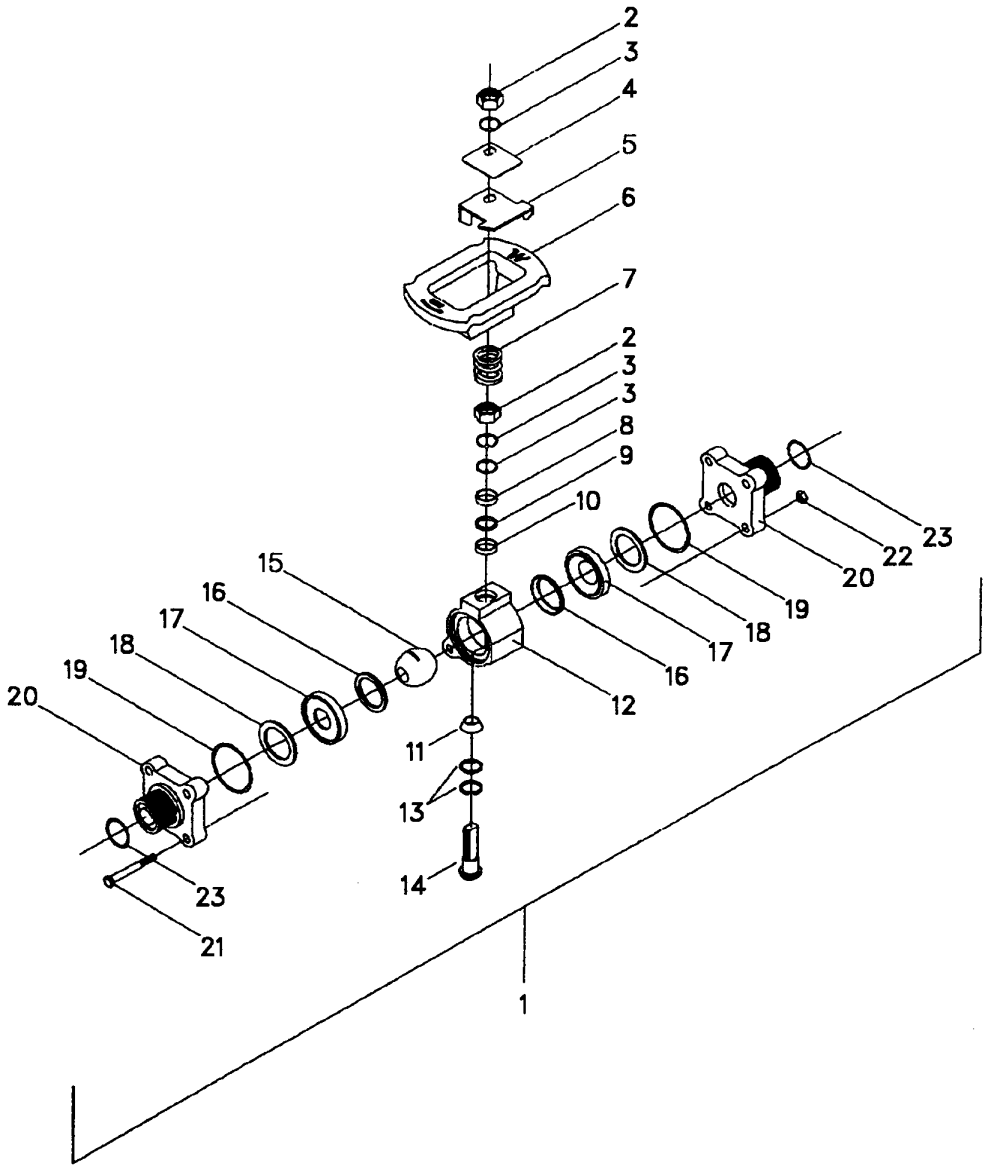

Figure 7-15. Isolation Ball Valve
(ALP-V-3, ALP-V-4, ALP-V-9, ALP-V-10, ALP-V-11, ALP-V-15, ATM-V-2, ATM-V-4, ATM-V-6, ATM-V-8, ATM-V-9, ATM-V-11, ATM-V-12, ATM-V-13, ATM-V-14, ECS-V-1, ECS-V-2, EQ-V-1, EQ-V-2, EQ-V-4, EQ-V-5, EXH-V-1, EXH-V-2, EXH-V-3, EXH-V-4, EXH-V-5, EXH-V-7, EXH-V-8, EXH-V-9)

Downloaded from http://www.everyspec.com

Table 7-15. Parts List for Isolation Ball Valve

Fig./Index Number	CAGE Code	Label Number	Part Number	Description	Qty
7-15-1	12623	NA	NA	Valve, Ball, 60 Series	1
NA	12623	ATM-V-2 ATM-V-4 ATM-V-6 ATM-V-8 ATM-V-11 ATM-V-12 ATM-V-13 ATM-V-14 EQ-V-2 EQ-V-4 EQ-V-5	B-62TF4	Brass 3-Piece Ball Valve	NA
NA	12623	ALP-V-11 ALP-V-15 ECS-V-1 ECS-V-2 EXH-V-1 EXH-V-2 EXH-V-3 EXH-V-4	B-63TF8	Brass 3-Piece Ball Valve	NA
NA	12623	ALP-V-3 ALP-V-4 ALP-V-9 ALP-V-10 ATM-V-9	B-65TF16 Part No. for Handle: SS-51K-65	Brass 3-Piece Ball Valve w/Black Oval Handle	NA
NA	12623	EQ-V-1	SS-62XTF4	Stainless Steel 3-Piece 3-Way Ball Valve	NA
NA	12623	EXH-V-5 EXH-V-7 EXH-V-8 EXH-V-9	SS-67TF24	Stainless Steel 3-Piece Ball Valve	NA
-2	12623	NA	NA	Stem Nut	2
-3	12623	NA	NA	Stem Spring	3
-4	12623	NA	NA	Name Plate	1
-5	12623	NA	NA	Stop Plate	1
-6	12623	NA	NA	Handle, Trip Proof	1
-7	12623	NA	NA	Grounding Spring	1
-8	12623	NA	NA	Gland	1
-9	12623	NA	NA	Packing Support	1
-10	12623	NA	NA	Top Packing	1

Downloaded from http://www.everyspec.com

Table 7-15. Parts List for Isolation Ball Valve (contd)

Fig./Index Number	CAGE Code	Label Number	Part Number	Description	Qty
-11	12623	NA	NA	Bottom Packing	1
-12	12623	NA	NA	Center Body	1
-13	12623	NA	NA	Stem Bearing	2
-14	12623	NA	NA	Stem	1
-15	12623	NA	NA	Ball	1
-16	12623	NA	NA	Support Ring	2
-17	12623	NA	NA	Seat	2
-18	12623	NA	NA	Seat Spring	2
-19	12623	NA	NA	Flange O-Ring	2
-20	12623	NA	NA	Flange	2
-21	12623	NA	NA	Body Bolt	4
-22	12623	NA	NA	Body Nut	4
-23	12623	NA	NA	O-Ring	2
Repair Kit Information					
NA	12623	NA	SS-91K-R62T	Seal Kit (for B-62T and SS-62XTF valves)	NA
NA	12623	NA	SS-91K-R63T	Seal Kit (for B-63TF8 valves)	NA
NA	12623	NA	SS-91K-R65T	Seal Kit (for B-65TF16 valves)	NA
NA	12623	NA	SS-91K-R67T	Seal Kit (for SS-67TF24 valves)	NA
NA	12623	NA	NA	Fastener Kit	NA
NA	12623	NA	NA	Flange O-Ring Kit	NA

Downloaded from http://www.everyspec.com

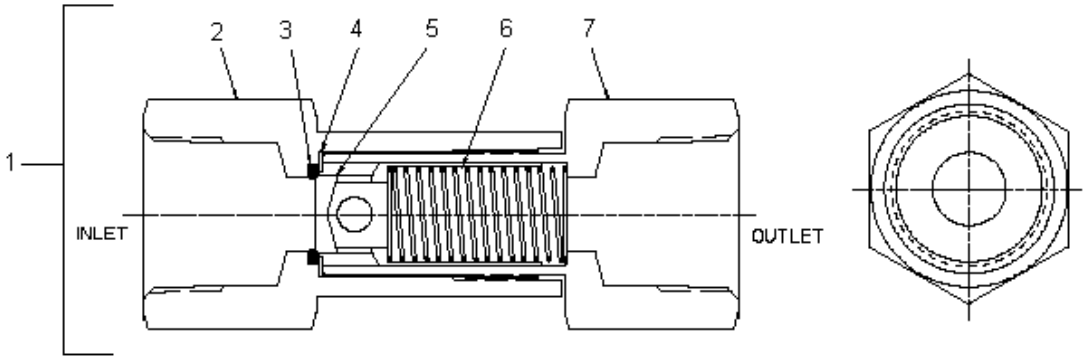

Figure 7-16. System Check Valve
(ALP-V-6, ALP-V-12, ALP-V-14, ALP-V-16, MLP-V-5, OLP-V-7, OLP-V-9)

Table 7-16. Parts List for System Check Valve

Fig./Index Number	CAGE Code	Label Number	Part Number	Description	Qty
7-16-1	18034	NA	NA	System Check Valve	1
NA	18034	ALP-V-12 ALP-V-16 MLP-V-5 OLP-V-7 OLP-V-9	B-8C4-$^{1}/_{3}$	NA	NA
NA	18034	ALP-V-6 ALP-V-14	B-16C4-$^{1}/_{3}$	NA	NA
-2	18034	NA	NA	Inlet Body	1
-3	18034	NA	NA	O-Ring Seal	1
-4	18034	NA	NA	Gasket	1
-5	18034	NA	NA	Poppet	1
-6	18034	NA	NA	Spring	1
-7	18034	NA	NA	Outlet Body	1
Repair Kit Information					
NA	18034	NA	M-8C4-SG -$^{1}/_{3}$	Repair Kit (for B-8C4 valves)	NA
NA	18034	NA	M-16C4-SG-$^{1}/_{3}$	Repair Kit (for B-16C4 valves)	NA
NA	18034	NA	VI70-14C-K4	Elastomer Kit (for B-16C4 valves)	NA
NA	18034	NA	302-14C-K2-$^{1}/_{3}$	Spring Kit (for B-16C4 valves)	NA
NA	18034	NA	A-14C-K6	Gasket Kit (for B-16C4 valves)	NA

Downloaded from http://www.everyspec.com

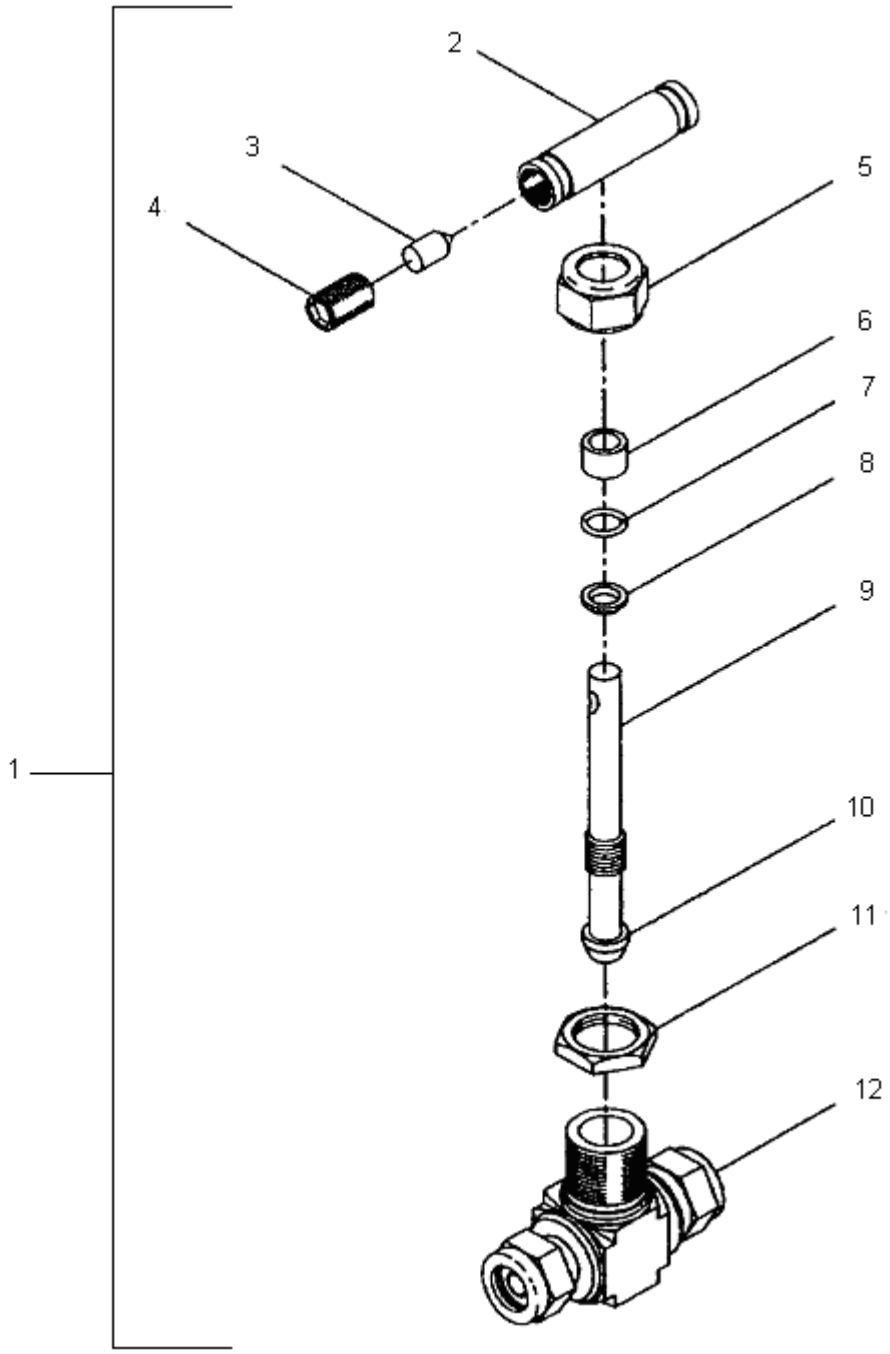

Figure 7-17. Needle Control Valve
(MLP-V-2, MLP-V-4, OLP-V-2, OLP-V-4, OLP-V-6, OLP-V-8)

Downloaded from http://www.everyspec.com

Table 7-17. Parts List for Needle Control Valve

Fig./Index Number	CAGE Code	Label Number	Part Number	Description	Qty
7-17-1	12623	NA	NA	Needle Control Valve, 18 Series	1
NA	12623	MLP-V-2 MLP-V-4	B-18VF8-ST	NA	NA
NA	12623	OLP-V-2 OLP-V-4 OLP-V-6 OLP-V-8	B-18VF8-G	NA	NA
-2	12623	NA	NA	Handle, Bar	1
-3	12623	NA	NA	Handle Pin	1
-4	12623	NA	NA	Set Screw	1
-5	12623	NA	NA	Packing Nut	1
-6	12623	NA	NA	Upper Gland	1
-7	12623	NA	NA	Packing	1
-8	12623	NA	NA	Lower Gland	1
-9	12623	NA	NA	Stem	1
-10	12623	NA	NA	Stem Tip	1
-11	12623	NA	NA	Panel Nut	1
-12	12623	NA	NA	Body	1
Repair Kit Information					
NA	12623	NA	NA	Stem Packing Nut (Item 7, Lubrication)	NA
NA	12623	NA	PFA-91K-18	Stem Packing Kit	NA

Downloaded from http://www.everyspec.com

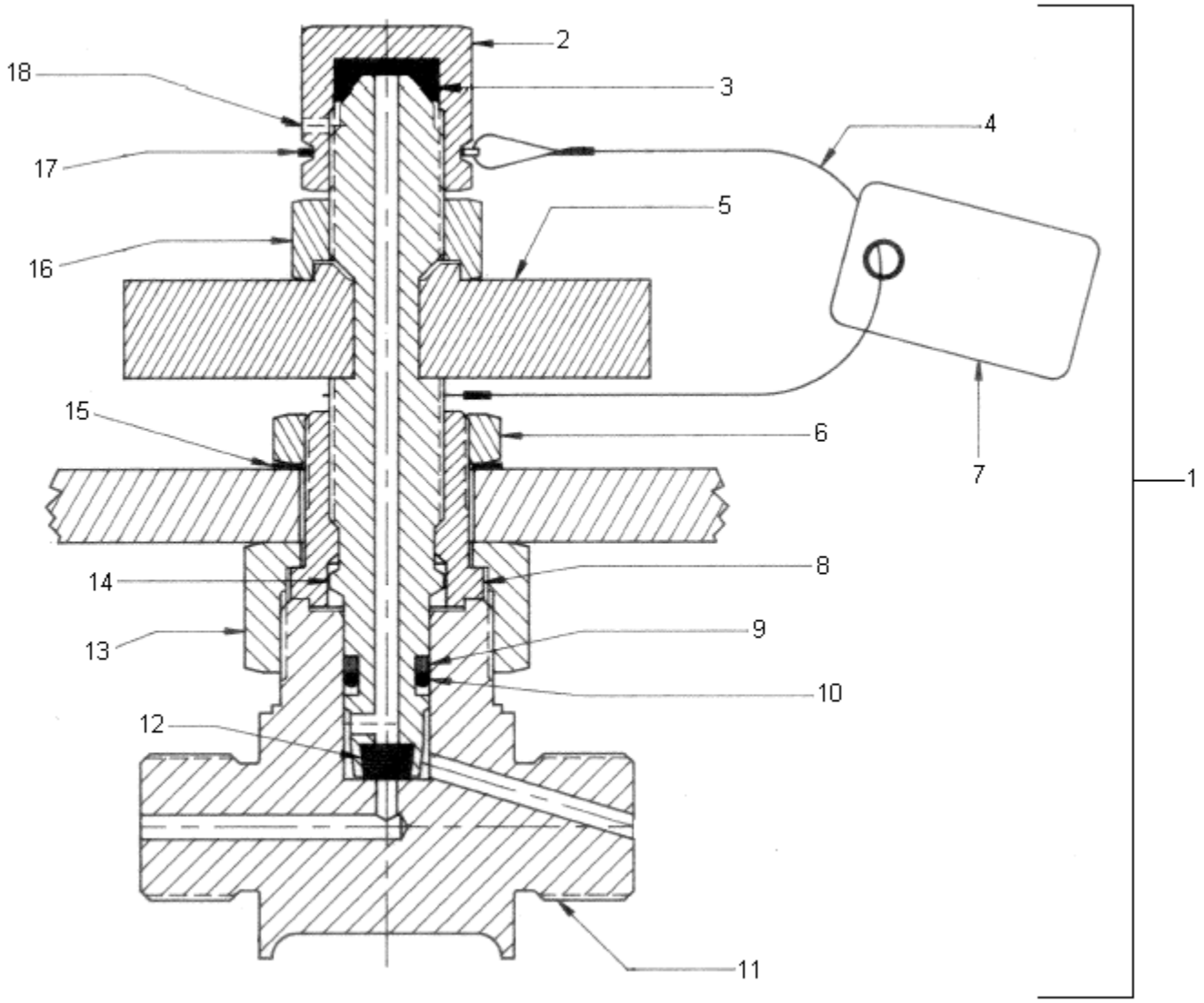

Figure 7-18. Gauge Isolation and Test Needle Valve
(AHP-V-103, AHP-V-107, ALP-V-2, ALP-V-8, ALP-V-106, ALP-V-110, ATM-V-1, ATM-V-3, ATM-V-5, ATM-V-7, EQ-V-3, MLP-V-3, OLP-V-5)

Downloaded from http://www.everyspec.com

Table 7-18. Parts List for Gauge Isolation and Test Needle Valve

Fig./Index Number	CAGE Code	Label Number	Part Number	Description	Qty
7-18-1	99565	NA	NA	Gauge Isolation and Test Needle Valve	1
NA	99565	AHP-V-103 AHP-V-107 ALP-V-2 ALP-V-8 ALP-V-106 ALP-V-110 ATM-V-1 ATM-V-3 ATM-V-5 ATM-V-7 EQ-V-3 MLP-V-3 OLP-V-5	PLC-10669 / MIL-V-24578B	NA	NA
-2	99565	NA	103860CA	Cap Assembly	1
-3	99565	NA	NA	Disc, Nylon	1
-4	99565	NA	NA	Cap Lanyard	1
-5	99565	NA	111430DZ	Handle	1
-6	99565	NA	103700AG	Panel Nut, Nickel Plate IAW. QQ-N-290, Class 1, Grade B	1
-7	99565	NA	110590XX	Plate	1
-8	99565	NA	106290CL	Bonnet	1
-9	99565	NA	011009EL	Backup Ring	1
-10	99565	NA	000009EE	O-Ring (Stem)	1
-11	99565	NA	103640CT	Body	1
-12	99565	NA	NA	Disc-Kel-F	1
-13	99565	NA	083943CC	Nut (Bonnet)	1
-14	99565	NA	107170XX	Stem Assembly	1
-15	99565	NA	NA	Lock Washer, Inverted Tooth	1
-16	99565	NA	107160CR	Handle Nut	1
-17	99565	NA	Waldes #5100-62	Retaining Ring	1
-18	99565	NA	NA	Vent Hole	1

Downloaded from http://www.everyspec.com

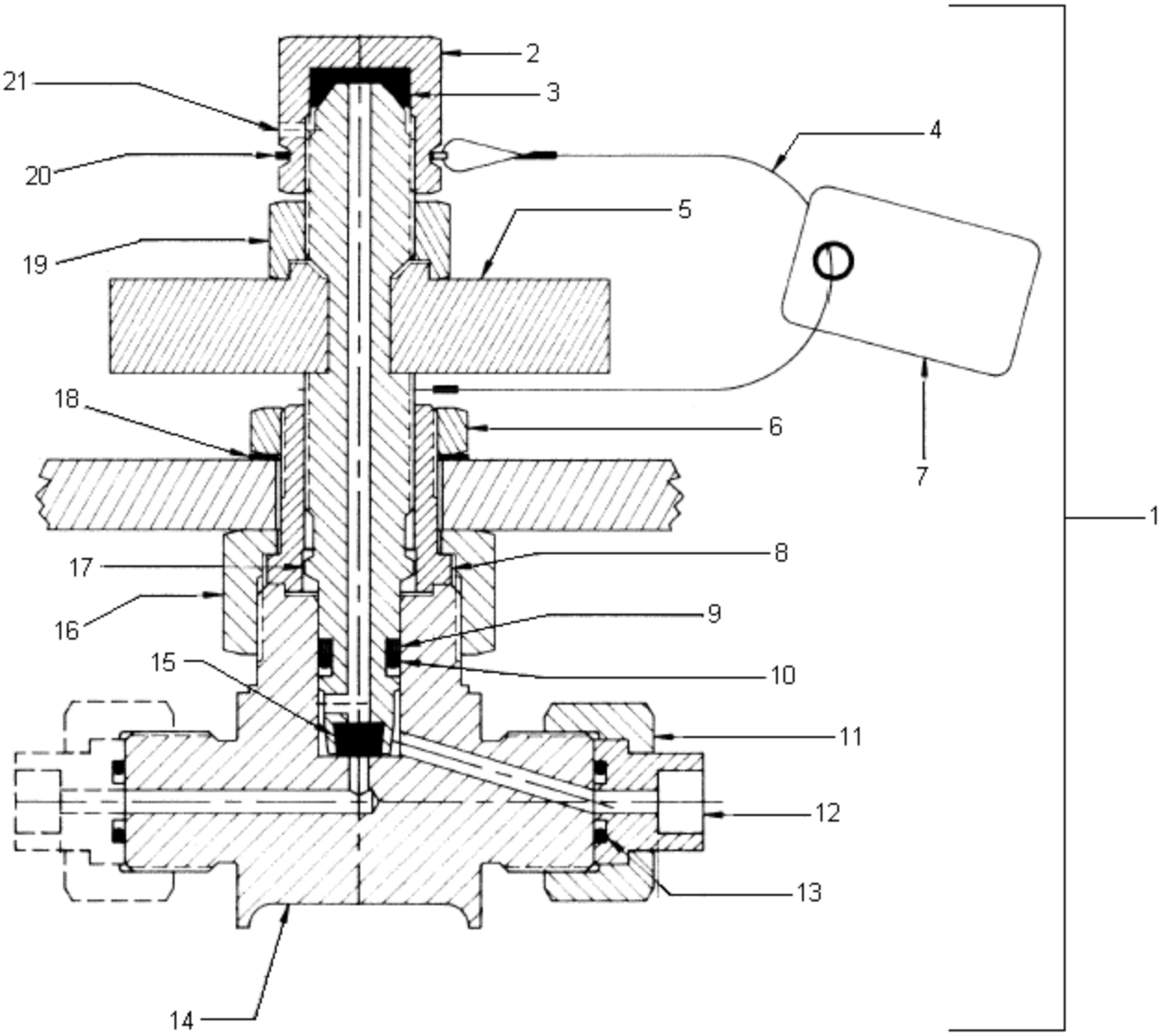

Figure 7-19. Gauge Isolation and Test Needle Valve
(OHP-V-202, OHP-V-204, OLP-V-207, OLP-V-208)

Downloaded from http://www.everyspec.com

Table 7-19. Parts List for Gauge Isolation and Test Needle Valve

Fig./Index Number	CAGE Code	Label Number	Part Number	Description	Qty
7-19-1	99565	NA	NA	Gauge Isolation and Test Needle Valve	1
NA	99565	OHP-V-202 OHP-V-204 OLP-V-207 OLP-V-208	PLC-11095 L/F	NA	NA
-2	99565	NA	103860CC	Cap Assembly	1
-3	99565	NA	NA	Disc, Nylon	1
-4	99565	NA	NA	Cap Lanyard	1
-5	99565	NA	111430DZ	Handle	1
-6	99565	NA	103700AG	Panel Nut, Nickel Plate IAW. QQ-N-290, Class 1, Grade B	1
-7	99565	NA	110590XX	Plate	1
-8	99565	NA	106290CL	Bonnet	1
-9	99565	NA	011009EL	Backup Ring	1
-10	99565	NA	000009EE	O-Ring (Stem)	1
-11	99565	NA	084810CC	Union Nut	2
-12	99565	NA	084820DB	Tailpiece	2
-13	99565	NA	000008EE	O-Ring (Union)	2
-14	99565	NA	103640DF	Body	1
-15	99565	NA	NA	Disc, Kel-F	1
-16	99565	NA	083943CC	Nut (Bonnet)	1
-17	99565	NA	107170DC	Stem Assembly	1
-18	99565	NA	NA	Lock Washer, Inverted Tooth	1
-19	99565	NA	107160CC	Handle Nut	1
-20	99565	NA	Waldes #5100-62	Retaining Ring	1
-21	99565	NA	NA	Vent Hole	1

Downloaded from http://www.everyspec.com

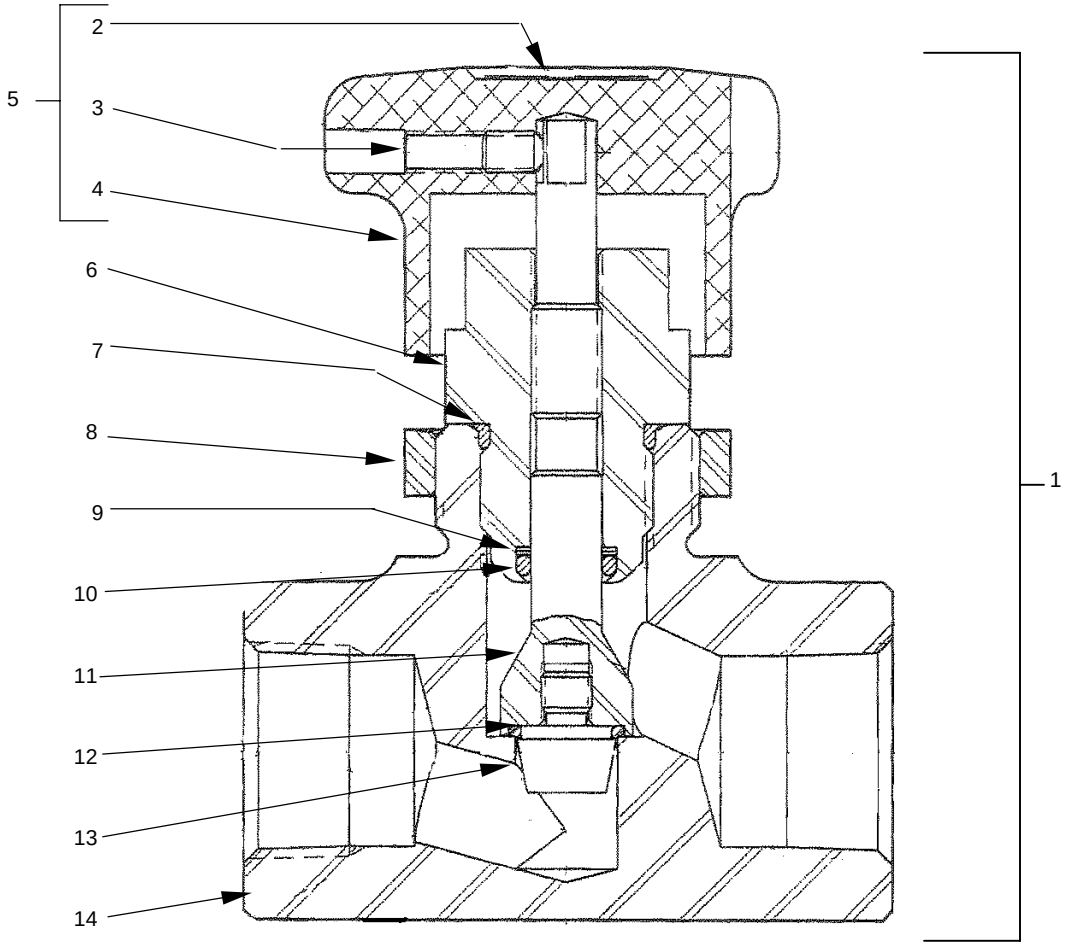

Figure 7-20. 1-Inch Soft Seat Needle Control Valve (EXH-V-6)

Downloaded from http://www.everyspec.com

Table 7-20. Parts List for 1-Inch Soft Seat Needle Control Valve

Fig./Index Number	CAGE Code	Label Number	Part Number	Description	Qty
7-20-1	97399	NA	NA	1-Inch Soft Seat Needle Control Valve	1
NA	97399	EXH-V-6	8180515KR	1-Inch Soft Seat Needle Control Valve	NA
-2	97399	NA	62-11963-1	Decal	1
-3	97399	NA	00-C6114-23	Set screw	1
-4	97399	NA	11-14561-4	Handle	1
-5	97399	NA	91-11649-4	Handle assembly	1*
-6	97399	NA	4-7095-5	Bonnet	1
-7	97399	NA	12-912-T	Gasket	1
-8	97399	NA	NA	Lock Nut	1
-9	97399	NA	13-10590	Backup Ring	1
-10	97399	NA	12-111-R	O-Ring	1
-11	97399	NA	2-7139-5	Stem	1
-12	97399	NA	12-015-K	Seat	1
-13	97399	NA	3-7141-5	Retainer	1
-14	97399	NA	1-7135-5	Body	1
Repair Kit Information					
NA	97399	NA	RBK-18293-KR	Repair Kit	NA**
NA	97399	NA	95S-17772-KR	Soft Goods Kit	NA***

* Consists of items # 2, 3, & 4.

** Consists of items # 6, 7, 9, 10, 11, 12, & 13.

*** Consists of items # 7, 9, 10, & 12.

Downloaded from http://www.everyspec.com

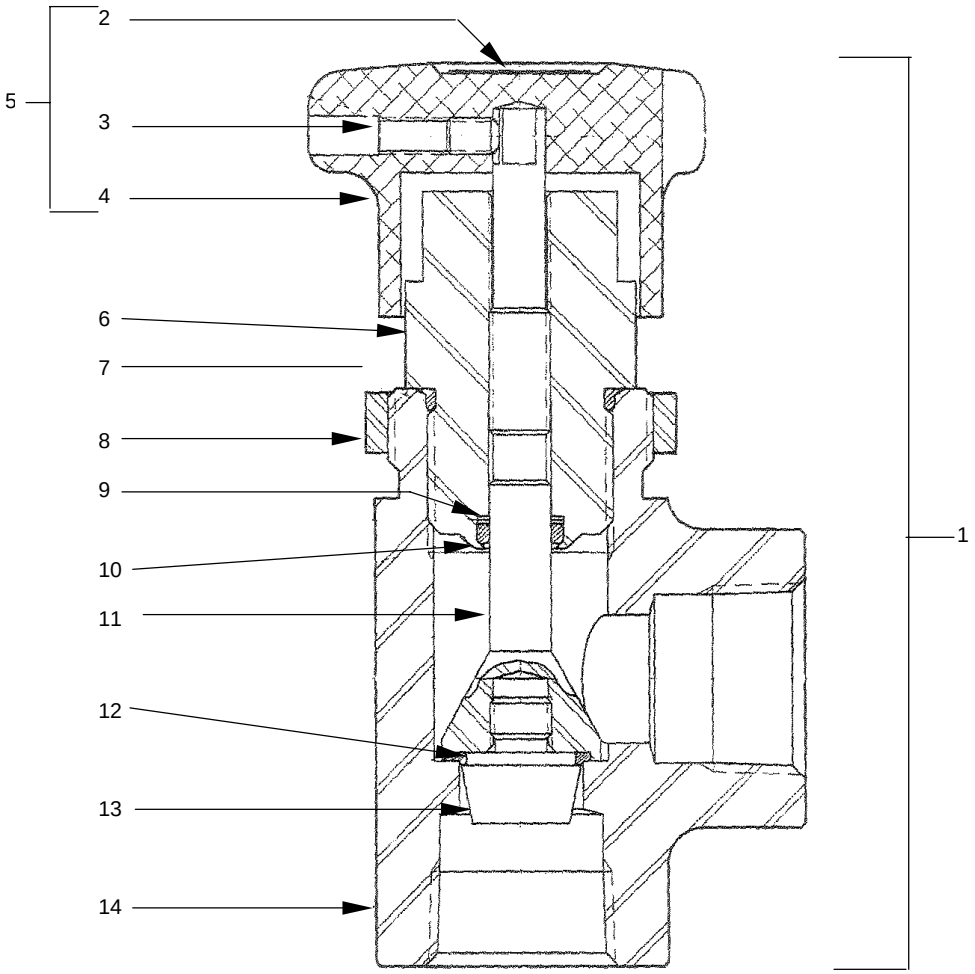

Figure 7-20A. 1-Inch Soft Seat Angle Needle Control Valve
(ALP-V-5, ALP-V-13)

Downloaded from http://www.everyspec.com

Table 7-20A. Parts List for 1-Inch Soft Seat Angle Needle Control Valve

Fig./Index Number	CAGE Code	Label Number	Part Number	Description	Qty
7-20A-1	97399	NA	NA	1-Inch Soft Seat Angle Needle Valve	1
NA	97399	ALP-V-5 ALP-V-13	A8187515KR	1-Inch Soft Seat Angle Needle Valve	NA
-2	97399	NA	62-11963-1	Decal	1
-3	97399	NA	00-C6114-23	Set screw	1
-4	97399	NA	11-14561-4	Handle	1
-5	97399	NA	91-11649-4	Handle assembly	1*
-6	97399	NA	4-15889-5	Bonnet	1
-7	97399	NA	12-916-T	Gasket	1
-8	97399	NA	10-7257-23	Panel Nut	1
-9	97399	NA	13-10590-9	Backup Ring	1
-10	97399	NA	12-111-R	O-Ring	1
-11	97399	NA	2-15888-5	Stem	1
-12	97399	NA	12-116-K	Seat	1
-13	97399	NA	3-7142-5	Retainer	1
-14	97399	NA	1-7138-6	Body	1
Repair Kit Information					
NA	97399	NA	RBK-18294-KR	Repair Kit	NA**
NA	97399	NA	95S-17774-KR	Soft Goods Kit	NA***

* Consists of items # 2, 3, & 4.

** Consists of items # 6, 7, 9, 10, 11, 12, & 13.

*** Consists of items # 7, 9, 10, & 12.

Downloaded from http://www.everyspec.com

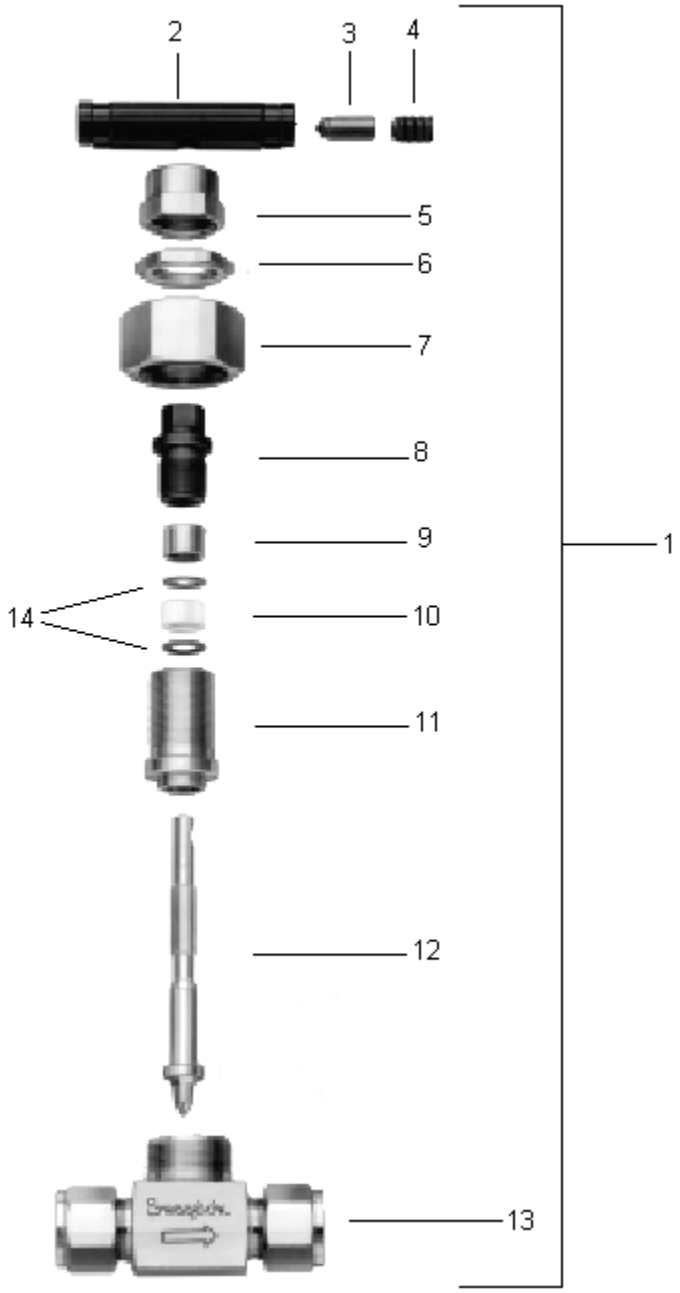

Figure 7-21. $^{1}/_{2}$-Inch Needle Valve
(OHP-V-201, OHP-V-203)

Downloaded from http://www.everyspec.com

Table 7-21. Parts List for $^{1}/_{2}$-Inch Needle Valve

Fig./Index Number	CAGE Code	Label Number	Part Number	Description	Qty
7-21-1	12623	NA	NA	$^{1}/_{2}$-Inch Needle Valve	1
NA	12623	OHP-V-201 OHP-V-203	M-6NRVCO8-M	NA	NA
-2	12623	NA	2024T4/B211	Handle	1
-3	12623	NA	A27, A27M	Handle Pin	1
-4	12623	NA	NA	Set Screw	1
-5	12623	NA	316 SS/A276 or A479	Lock Nut	1
-6	12623	NA	316 SS/B783	Panel Nut	1
-7	12623	NA	316 SS/A276	Union Nut	1
-8	12623	NA	416 SS/A582	Packing Bolt	1
-9	12623	NA	NA	Gland	1
-10	12623	NA	PTFE/D1710	Packing	1
-11	12623	NA	NA	Bonnet	1
-12	12623	NA	NA	NR Regulating Stem	1
-13	12623	NA	NA	Body	1
-14	12623	NA	PTFE	Packing Supports	2
Repair Kit Information					
NA	NA	NA	PK-9K-6N	Software Kit	NA

Downloaded from http://www.everyspec.com

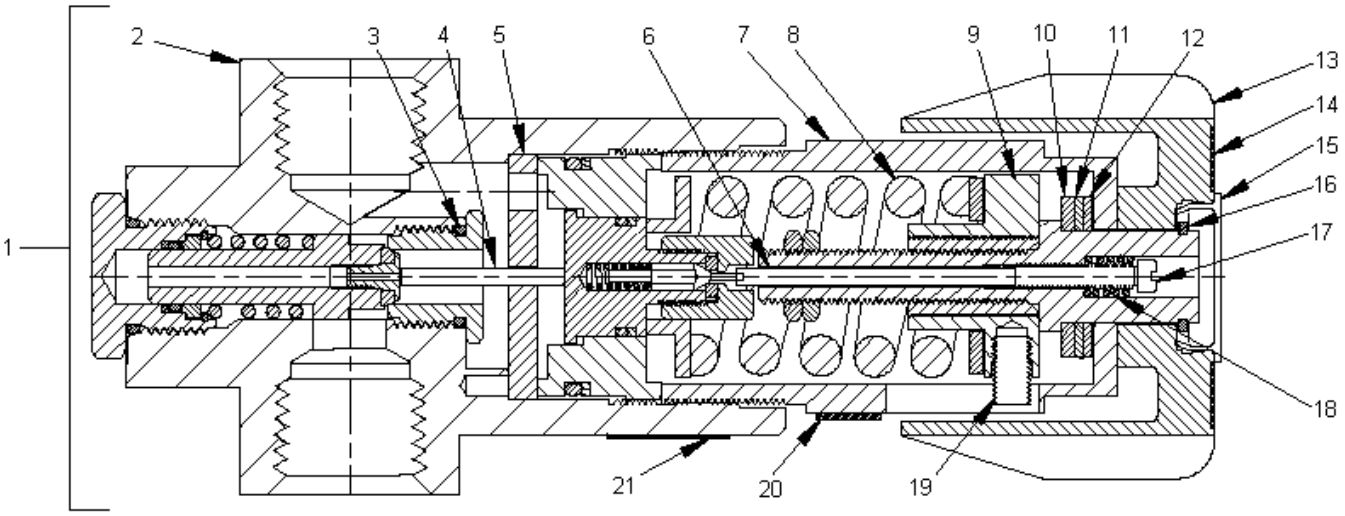

Figure 7-22. HP Air Regulator
(AHP-R-108, AHP-R-109)

Downloaded from http://www.everyspec.com

Table 7-22. Parts List for HP Air Regulator

Fig./Index Number	CAGE Code	Label Number	Part Number	Description	Qty
7-22-1	13669	NA	NA	HP Air Regulator	1
NA	13669	AHP-R-108 AHP-R-109	44F-1323-0812-262	NA	NA
-2	13669	NA	62317-19927	Body, Ported	1
-3	13669	NA	1082	Gasket, 0.578, 0.483, 0.029, CTFE	1
-4	13669	NA	5447-2	Connector $^{1}/_{4}$”	1
-5	13669	NA	9219-2	Plate	1
-6	13669	NA	5948-2	Rod, Vent Valve	1
-7	13669	NA	5945-0	Bonnet (Nickel Plate)	1
-8	13669	NA	1050	Spring, 1.48, 2.10, 2195, Van STL	1
-9	13669	NA	40942	Assembly, Screw Adjusting	1
-10	13669	NA	9059-8	Washer, 1.105, 0.632, 0.120, 17-4	1
-11	13669	NA	9061-2	Washer, 1.105, 0.632, 0.050, Nylat	1
-12	13669	NA	2230	Washer, 1.105, 0.632, 0.031, 17-7	1
-13	13669	NA	5397-6	Hand Knob, Black	1
-14	13669	NA	6320	Label	1
-15	13669	NA	5432	Hole Plug, 1.000 Metal	1
-16	13669	NA	5427	Ring, Retaining	1
-17	13669	NA	5401-14328	Screw, Fillister	1
-18	13669	NA	2776	Spring, 0.25, 0.60, 35, SST	1
-19	13669	NA	5405-211686	Screw, Set	1
-20	13669	NA	5153	Label, Vent	1
-21	13669	NA	60079	Label	1
Repair Kit Information					
NA	13669	NA	389F7496	Soft Goods Kit	NA
NA	13669	NA	389F7497	Repair Kit	NA

Downloaded from http://www.everyspec.com

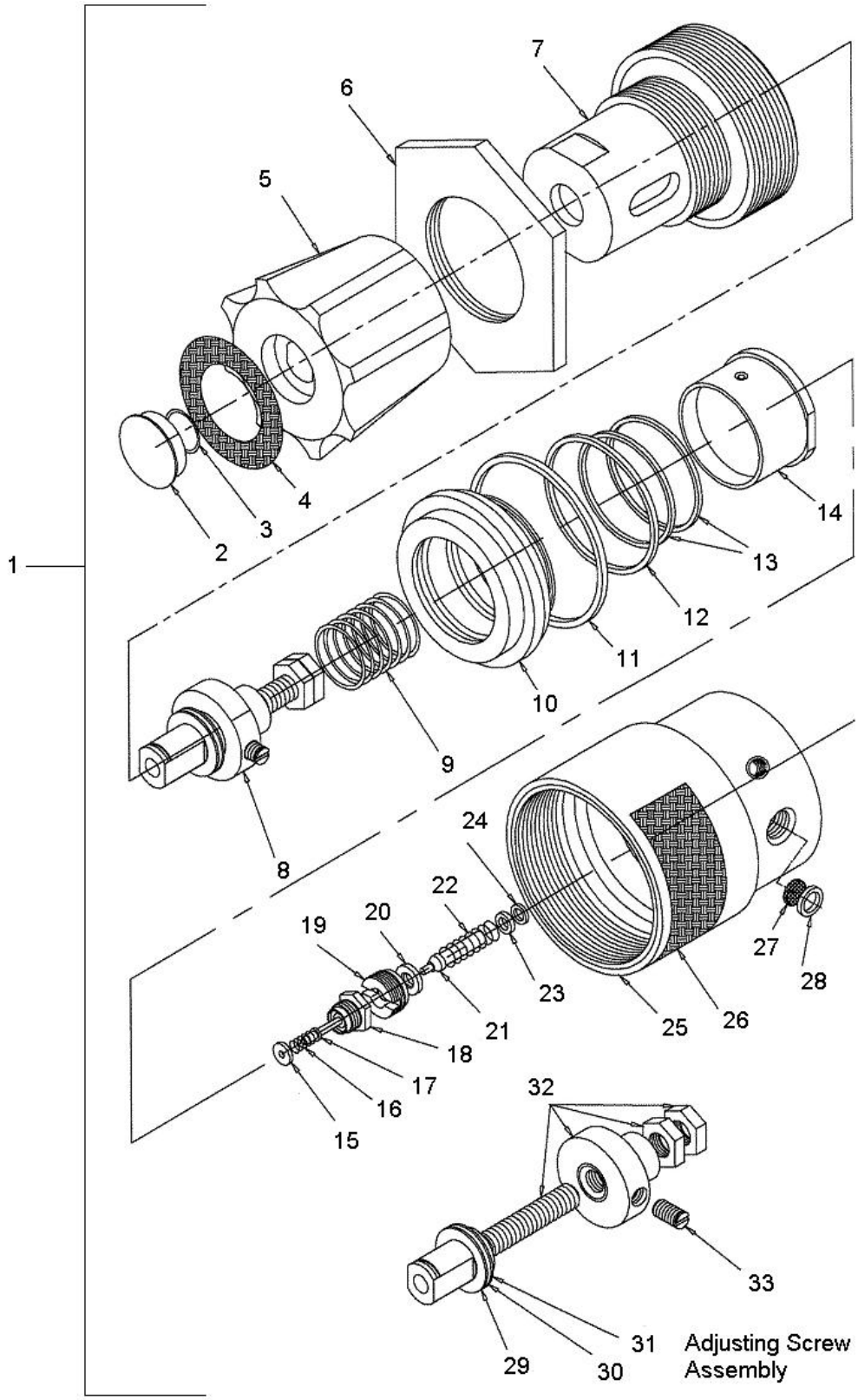

Figure 7-23. HP Oxygen Regulator
(OHP-R-205, OHP-R-206)

Downloaded from http://www.everyspec.com

Table 7-23. Parts List for HP Oxygen Regulator

Fig./Index Number	CAGE Code	Label Number	Part Number	Description	Qty
7-23-1	13669	NA	NA	HP Oxygen Regulator	1
NA	13669	OHP-R-205 OHP-R-206	44F5417T308	NA	NA
-2	13669	NA	NA	Plug	1
-3	13669	NA	NA	Retaining Ring	1
-4	13669	NA	NA	Label	1
-5	13669	NA	NA	Handle	1
-6	13669	NA	NA	Panel Nut	1
-7	13669	NA	NA	Housing	1
-8	13669	NA	NA	Adjusting Screw Assembly	1
-9	13669	NA	NA	Spring	1
-10	13669	NA	NA	Backup Sensor	1
-11	13669	NA	NA	O-Ring	1
-12	13669	NA	NA	O-Ring	1
-13	13669	NA	NA	O-Ring	1
-14	13669	NA	NA	Sensor	1
-15	13669	NA	NA	Valve Seat	1
-16	13669	NA	NA	Spring	1
-17	13669	NA	NA	Vent Valve	1
-18	13669	NA	NA	Vent Seat Retainer	1
-19	13669	NA	NA	Seat Retainer	1
-20	13669	NA	NA	Seat	1
-21	13669	NA	NA	Valve	1
-22	13669	NA	NA	Spring	1
-23	13669	NA	NA	O-Ring	1
-24	13669	NA	NA	Backup Ring	1
-25	13669	NA	NA	Body	1
-26	13669	NA	NA	Label	1
-27	13669	NA	NA	Backup Plate	1

Downloaded from http://www.everyspec.com

Table 7-23. Parts List for Oxygen Supply Regulator (contd)

Fig./Index Number	CAGE Code	Label Number	Part Number	Description	Qty
-28	13669	NA	NA	O-Ring	1
-29	13669	NA	NA	Washer	1
-30	13669	NA	NA	Thrust Bearing	1
-31	13669	NA	NA	Washer	1
-32	13669	NA	NA	Adjusting Screw Assembly	1
-33	13669	NA	NA	Set Screw	1
Repair Kit Information					
NA	13669	NA	389F7022	Soft Goods Kit	NA
NA	13669	NA	389F7023	Repair Kit	NA

Downloaded from http://www.everyspec.com

THIS PAGE INTENTIONALLY LEFT BLANK

Downloaded from http://www.everyspec.com

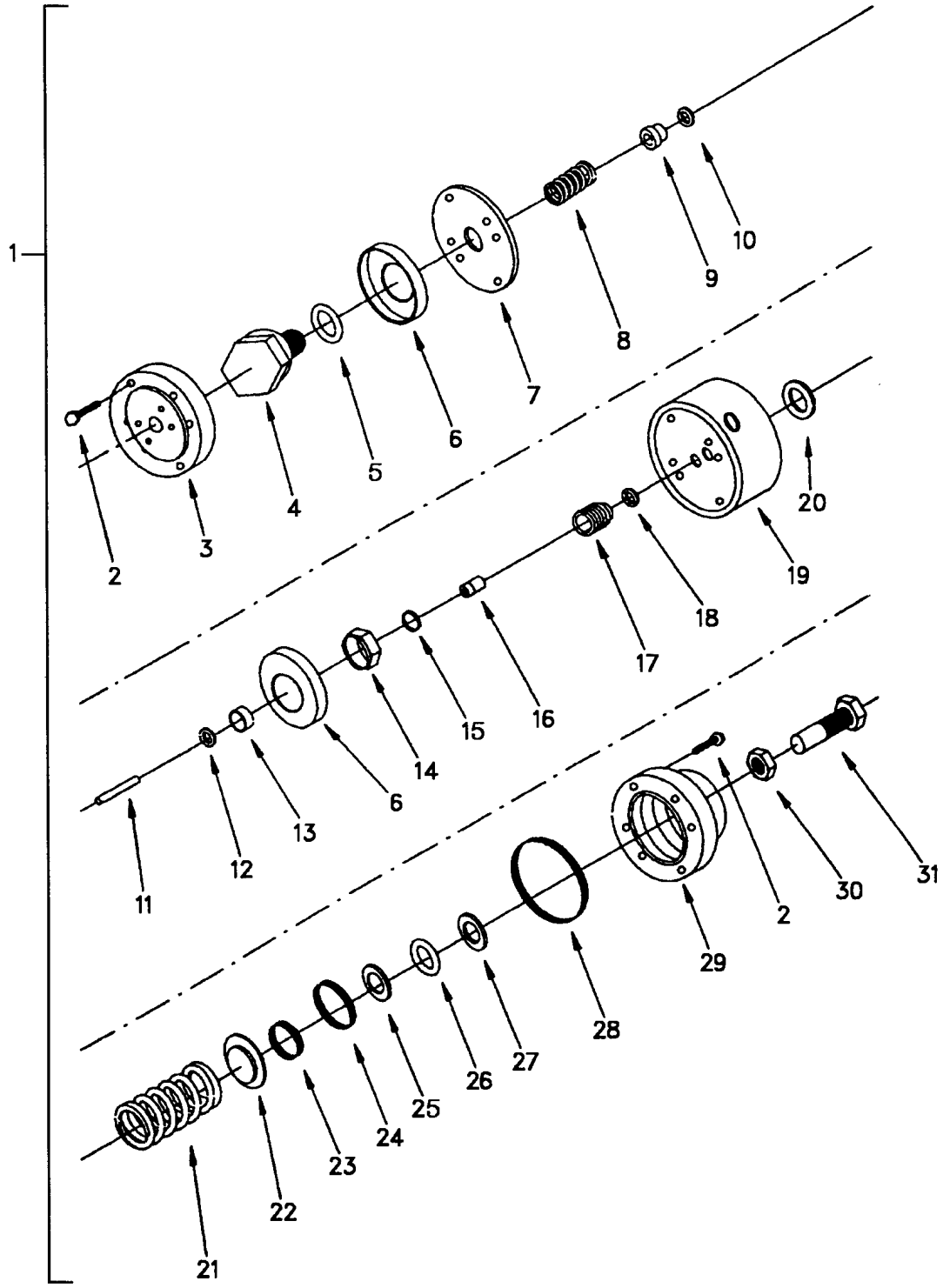

Figure 7-24. BIBS Exhaust Manifold Pressure Regulator
(EXH-R-1, EXH-R-2)

Downloaded from http://www.everyspec.com

Table 7-24. Parts List for BIBS Exhaust Manifold Pressure Regulator

Fig./Index Number	CAGE Code	Label Number	Part Number	Description	Qty
7-24-1	13699	NA	NA	BIBS Exhaust Manifold Pressure Regulator	1
NA	13699	EXH-R-1 EXH-R-2	26-2912-282A	NA	NA
-2	13669	NA	NA	Screw	1
-3	13669	NA	NA	Dome, Reference, 26-2911-382 Brass	1
-4	13669	NA	NA	Seal, Diaphragm Center	1
-5	13669	NA	NA	O-Ring	1
-6	13669	NA	NA	Diaphragm, Backup	1
-7	13669	NA	NA	Diaphragm, Viton A	1
-8	13669	NA	NA	Spring	1
-9	13669	NA	NA	Stem Cap, Valve	1
-10	13669	NA	NA	Washer	1
-11	13669	NA	NA	Shaft, Force	1
-12	13669	NA	NA	O-Ring	1
-13	13669	NA	NA	Stem, Valve	1
-14	13669	NA	NA	Nut, Diaphragm Center	1
-15	13669	NA	NA	O-Ring	1
-16	13669	NA	NA	Piston, Balance	1
-17	13669	NA	NA	Retainer, Seat	1
-18	13669	NA	NA	Seat, Valve, Kel-F-81	1
-19	13669	NA	NA	Body, Regulator, 26-2911-382 Brass	1
-20	13669	NA	NA	Button, Spring	1
-21	13669	NA	NA	Spring, 26-2911-382 0-15 Bias	1
-22	13669	NA	NA	Button, Spring	1
-23	13669	NA	NA	Ring, Regulator	1
-24	13669	NA	NA	Ring, Regulator	1
-25	13669	NA	NA	Washer	1
-26	13669	NA	NA	O-Ring	1

Downloaded from http://www.everyspec.com

Table 7-24. Parts List for BIBS Exhaust Manifold Pressure Regulator (contd)

Fig./Index Number	CAGE Code	Label Number	Part Number	Description	Qty
-27	13669	NA	NA	Ring, Backup	1
-28	13669	NA	NA	O-Ring	1
-29	13669	NA	NA	Dome, Balance, 26-2911-382 Brass	1
-30	13669	NA	NA	Nut	1
-31	13669	NA	NA	Screw, Adjusting	1
Repair Kit Information					
NA	13669	NA	389-1913	Repair Kit, Soft Goods (Contains Items 5, 7, 12, 15, 18, 26, 27, 28)	NA
NA	13669	NA	389-2809	Standard Repair Kit, Soft and Metallic Goods (Contains Items 5, 7, 9, 10,11, 12, 13, 15, 16, 18, 26, 27, 28)	NA

Downloaded from http://www.everyspec.com

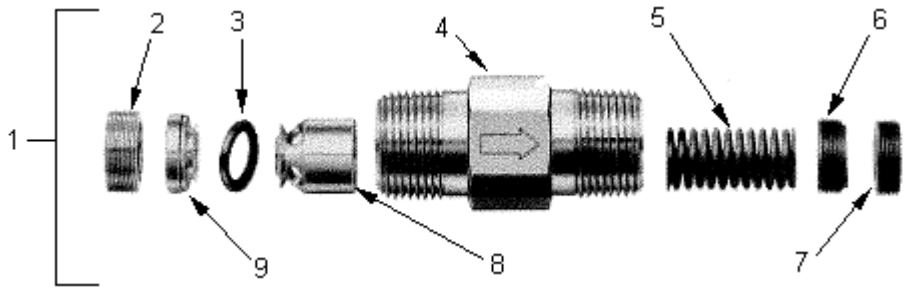

Figure 7-25. LP Mixed Gas and Oxygen Relief Valve
(MLP-V-1, OLP-V-1, OLP-V-3)

Table 7-25 Parts List for LP Mixed Gas and Oxygen Relief Valve

Fig./Index Number	CAGE Code	Label Number	Part Number	Description	Qty
7-25-1	18034	NA	NA	LP Mixed Gas and Oxygen Relief Valve	1
NA	18034	MLP-V-1 OLP-V-1 OLP-V-3	B-8CPA2-150	NA	NA
-2	18034	NA	NA	Insert Lock Screw	1
-3	18034	NA	NA	O-Ring	1
-4	18034	NA	NA	Valve Body	1
-5	18034	NA	NA	Spring	1
-6	18034	NA	NA	Adjusting Screw	1
-7	18034	NA	NA	Locking Screw	1
-8	18034	NA	NA	Poppet	1
-9	18034	NA	NA	Insert	1
Repair Kit Information					
NA	18034	NA	BU90-8CP-K4	Elastomer (O-Ring) Kit	NA
NA	18034	NA	302-BCA-K2-150	Spring Kit	NA

Downloaded from http://www.everyspec.com

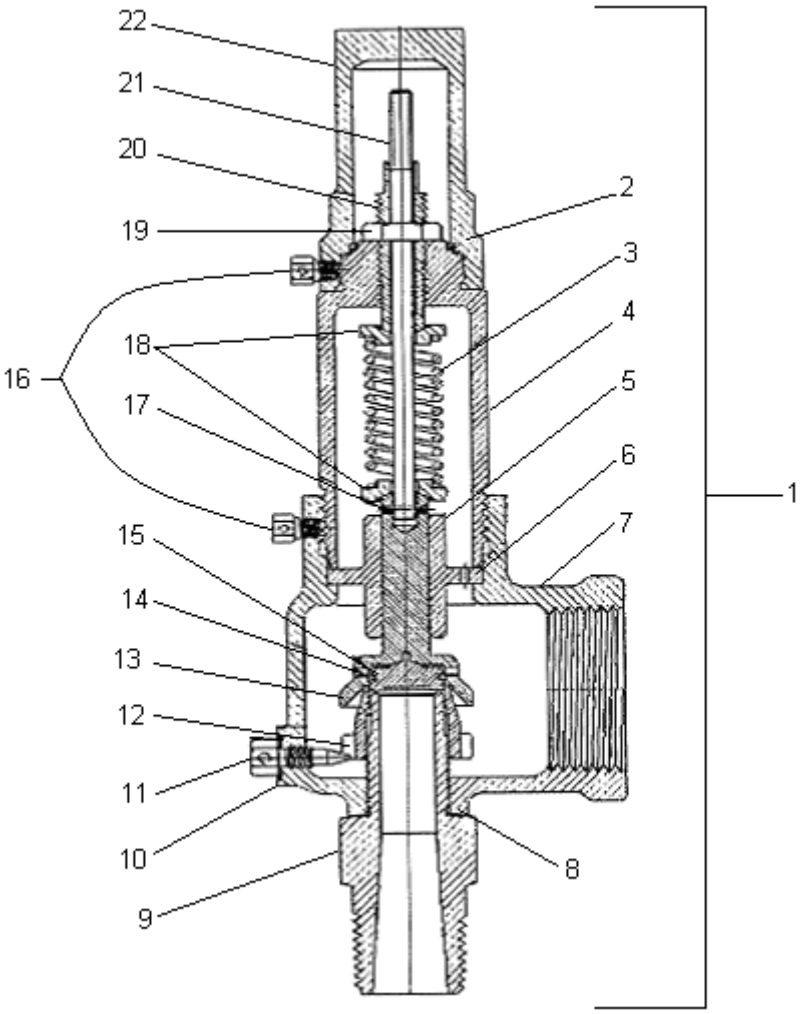

Figure 7-26. LP Air Reducer Outlet Relief Valve
(ALP-V-104, ALP-V-105)

Downloaded from http://www.everyspec.com

Table 7-26. Parts List for LP Air Reducer Outlet Relief Valve

Fig./Index Number	CAGE Code	Label Number	Part Number	Description	Qty
7-26-1	57661	NA	NA	LP Air Reducer Outlet Relief Valve	1
NA	57661	ALP-V-104 ALP-V-105	521FEBKV0300 or 521FEBZMX1	NA	NA
-2	57661	NA	NA	O-Ring	1
-3	57661	NA	NA	Spring	1
-4	57661	NA	NA	Bonnet	1
-5	57661	NA	NA	Guide	1
-6	57661	NA	NA	Bonnet Seal	1
-7	57661	NA	NA	Body	1
-8	57661	NA	NA	Nozzle Seal	1
-9	57661	NA	NA	Nozzle	1
-10	57661	NA	NA	Nozzle Screw Seal	1
-11	57661	NA	NA	Nozzle Adjustment Screw	1
-12	57661	NA	NA	Nozzle Ring	1
-13	57661	NA	NA	Disc Holder	1
-14	57661	NA	NA	Retaining Ring	1
-15	57661	NA	NA	Disc	1
-16	57661	NA	NA	Set Screw	2
-17	57661	NA	NA	Spring Pin	1
-18	57661	NA	NA	Spring Washer	2
-19	57661	NA	NA	Adjustment Bolt Nut	1
-20	57661	NA	NA	Adjustment Bolt	1
-21	57661	NA	NA	Stem	1
-22	57661	NA	NA	Cap	1

Note: Any 521FEBKV0300 or 521FEBZMX1 valve that does not seem to be functioning properly should be sent to an approved test facility for testing and replacement, if necessary.

Downloaded from http://www.everyspec.com

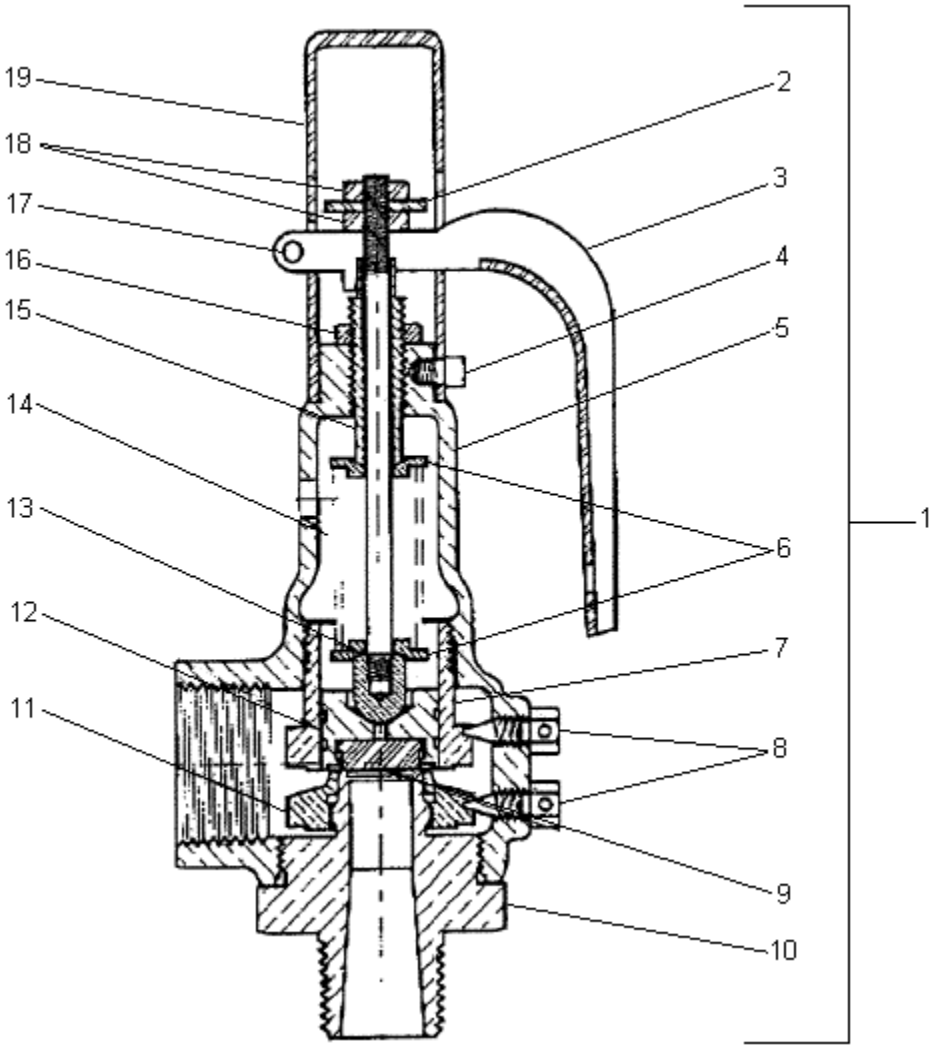

Figure 7-27. LP Air Supply Relief Valve
(ALP-V-1, ALP-V-7)

Downloaded from http://www.everyspec.com

Table 7-27. Parts List for LP Air Supply Relief Valve

Fig./Index Number	CAGE Code	Label Number	Part Number	Description	Qty
7-27-1	57661	NA	NA	LP Air Supply Relief Valve	1
NA	57661	ALP-V-1 ALP-V-7	19KDDK300	NA	NA
-2	57661	NA	NA	Stem Washer	1
-3	57661	NA	NA	Lever	1
-4	57661	NA	NA	Cap Screw	1
-5	57661	NA	NA	Body	1
-6	57661	NA	NA	Spring Washer	2
-7	57661	NA	NA	Guide Ring	1
-8	57661	NA	NA	Set Screw	2
-9	57661	NA	NA	Seat	1
-10	57661	NA	NA	Nozzle	1
-11	57661	NA	NA	Nozzle Ring	1
-12	57661	NA	NA	Disc	1
-13	57661	NA	NA	Stem Assembly	1
-14	57661	NA	NA	Spring Spacer	1
-15	57661	NA	NA	Adjustment Guide Screw	1
-16	57661	NA	NA	Stem Guide Nut	1
-17	57661	NA	NA	Lever Pin	1
-18	57661	NA	NA	Stem Nut	2
-19	57661	NA	NA	Cap	1

Notes:

1. Any 19KDDK300 valve that does not seem to be functioning properly should be sent to an approved test facility for testing and replacement, if necessary.
2. The manufacturer has changed the part number for this valve. The old part number was 19-301-300.

Downloaded from http://www.everyspec.com

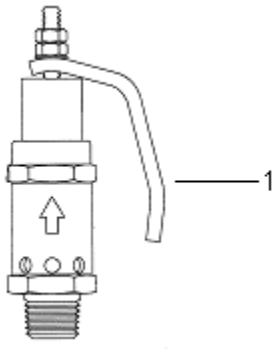

Figure 7-28. Recompression Chamber Hull Relief Valve (ATM-V-10)

Table 7-28. Parts List for Recompression Chamber Hull Relief Valve

Fig./Index Number	CAGE Code	Label Number	Part Number	Description	Qty
7-28-1	91816	NA	NA	Recompression Chamber Hull Relief Valve	1
NA	91816	ATM-V-10	M5132-8M(L)-110M ASME	NA	NA
Repair Kit Information					
NA	91816	NA	K/M5132-8M(L)-110M ASME	Repair Kit	NA

Downloaded from http://www.everyspec.com

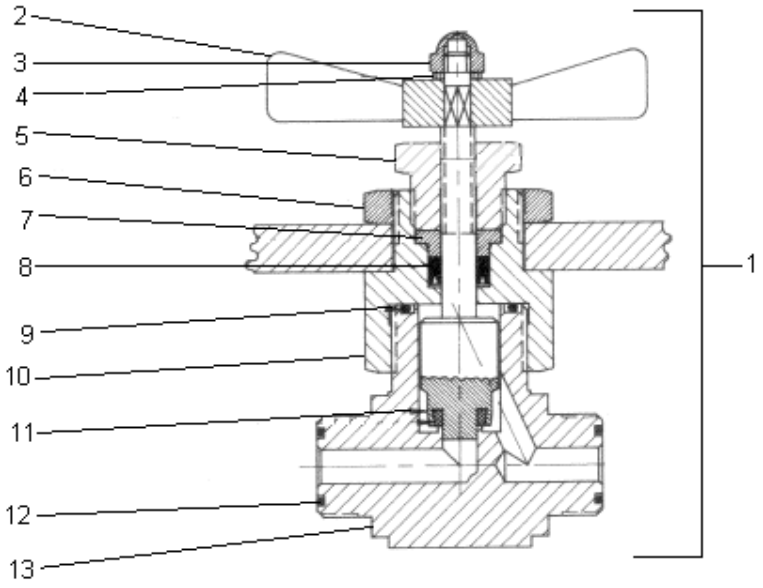

Figure 7-29. HP Air Supply Valve
(AHP-V-101, AHP-V-102)

Table 7-29. Parts List for HP Air Supply Valve

Fig./Index Number	CAGE Code	Label Number	Part Number	Description	Qty
7-29-1	99565	NA	NA	HP Air Supply Valve	1
NA	99565	AHP-V-101 AHP-V-102	G2SGM8-08C	NA	NA
-2	99565	NA	0505560DL	Handle	1
-3	99565	NA	001004AA	Acorn Nut	1
-4	99565	NA	004209CA	Lock Washer	1
-5	99565	NA	041382AC	Gland Nut	1
-6	99565	NA	043032AG	Panel Nut	1
-7	99565	NA	041372AG	Retainer	1
-8	99565	NA	001909EA	Packing	1
-9	99565	NA	000121ED	Body O-Ring	1
-10	99565	NA	109902CF	Bonnet	1
-11	99565	NA	114228CF	Stem Assembly	1
-12	99565	NA	000015ED	O-Ring (Union)	2
-13	99565	NA	112177CG	Body	1

Downloaded from http://www.everyspec.com

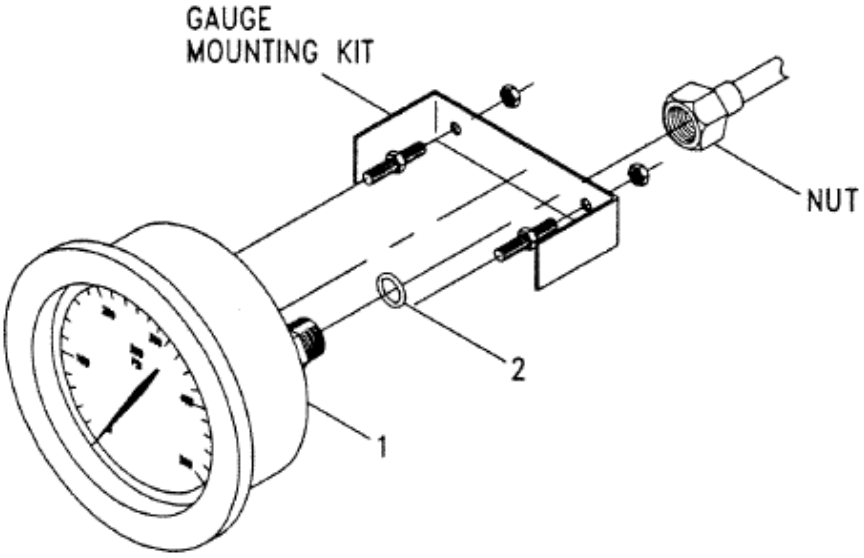

Figure 7-30. System Gauge
(AHP-G-102, AHP-G-103, ALP-G-1, ALP-G-2, ALP-G-3, ALP-G-101, ALP-G-104, MLP-G-1, OHP-G-201, OHP-G-202, OLP-G-1, OLP-G-203, OLP-G-204)

Downloaded from http://www.everyspec.com

Table 7-30. Parts List for System Gauge

Fig./Index Number	CAGE Code	Label Number	Part Number	Description	Qty
7-30-1	52159	NA	NA	System Gauge	1
NA	52159	ALP-G-3	25502-23B11GAD-GCO-GDA-CBE	NA	NA
NA	52159	OLP-G-1	25502-27B21GAD-GBK-GCO-GDA	NA	NA
NA	52159	MLP-G-1	25502-27B21GAD-GBK-GCO-GDA	NA	NA
NA	52159	ALP-G-1	25502-27B21GAD-GCL-GCO	NA	NA
NA	52159	ALP-G-2	25502-27B21GAD-GCL-GCO-GDA	NA	NA
NA	52159	OLP-G-203 OLP-G-204	25502-27B31-MCD	NA	NA
NA	52159	ALP-G-101 ALP-G-104	25502-28B31-MCD	NA	NA
NA	52159	OHP-G-201 OHP-G-202	25502-34B31-MCD	NA	NA
NA	52159	AHP-G-102 AHP-G-103	25502-37B31-MCD	NA	NA
-2	81349	NA	M83248/2-010	O-Ring	1
Replaceable Parts					
NA	52159	NA	3045-0005	2.5” Acrylic Crystal for ABS Case	1
NA	52159	NA	2167-0009	2.5” Snap Ring	1
NA	52159	NA	2074-0006-1	$^{1}/_{16}$” Diameter Neoprene Crystal Gasket Per Foot	0.5

Downloaded from http://www.everyspec.com

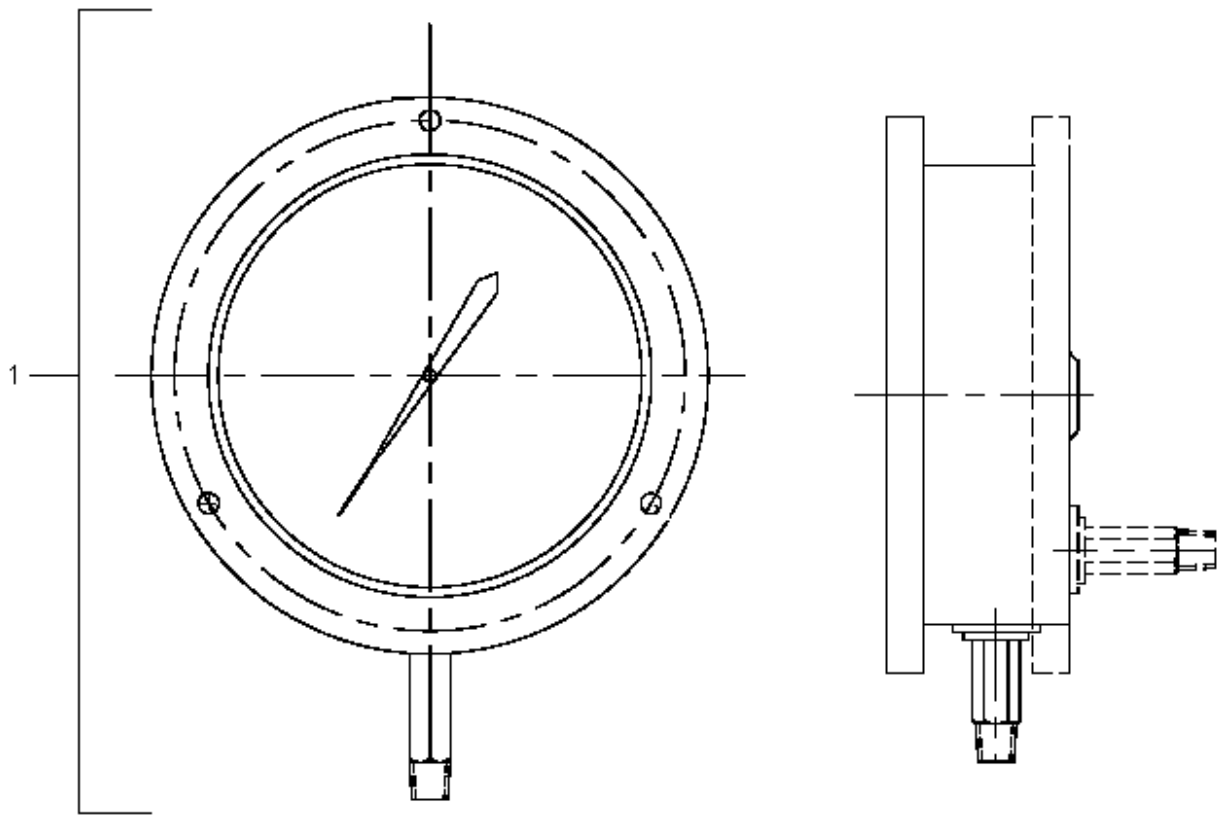

Figure 7-31. Depth Gauge
(PN-G-1, PN-G-2, PN-G-3, PN-G-4)

Table 7-31. Parts List for Depth Gauge

Fig./Index Number	CAGE Code	Label Number	Part Number	Description	Qty
7-31-1	52159	NA	NA	Depth Gauge	1
NA	52159	PN-G-1 PN-G-2 PN-G-3 PN-G-4	25546-23B21GAD-GDA-CBE	NA	NA
Replaceable Parts					
NA	52159	NA	2045-0006	8.5” Acrylic Crystal	1
NA	52159	NA	2167-0002	8.5” Snap Ring	1
NA	52159	NA	2074-0006-1	$^{1}/_{16}$” Diameter Neoprene Crystal Gasket Per Foot	2

Downloaded from http://www.everyspec.com

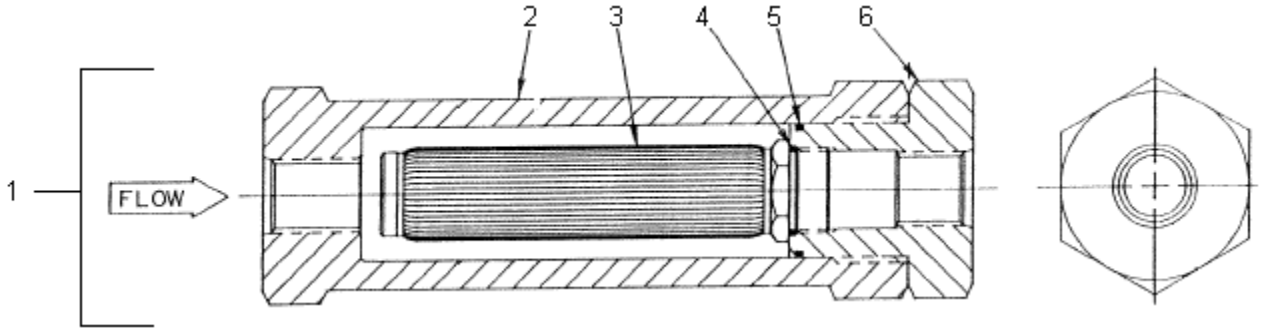

Figure 7-32. HP Air Supply Filter
(AHP-F-1, AHP-F-2)

Table 7-32. Parts List for HP Air Supply Filter

Fig./Index Number	CAGE Code	Label Number	Part Number	Description	Qty
7-32-1	59165	NA	NA	HP Air Supply Filter	1
NA	59165	AHP-F-1 AHP-F-2	U-956	NA	NA
-2	59165	NA	4412G-C-8	Case	1
-3	59165	NA	412G-18ABS	Filter Element	1
-4	59165	NA	590618	Seal O-Ring (Element)	1
-5	59165	NA	591418	Seal O-Ring (Case Plug)	1
-6	59165	NA	4412G-P-8	Case Plug	1

Downloaded from http://www.everyspec.com

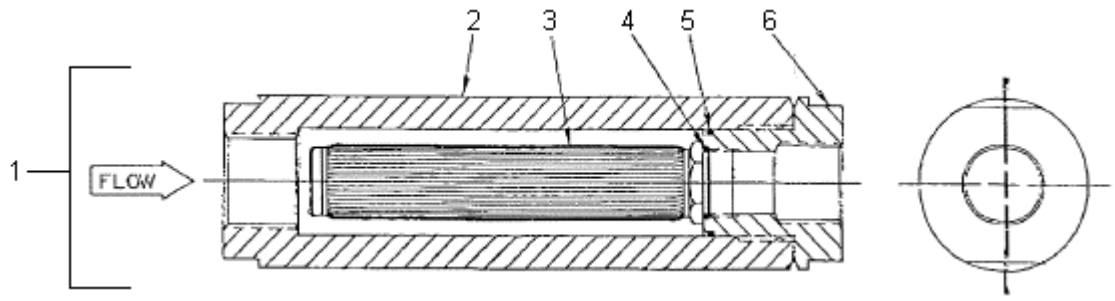

Figure 7-33. LP Air Supply Filter
(ALP-F-1, ALP-F-2)

Table 7-33. Parts List for LP Air Supply Filter

Fig./Index Number	CAGE Code	Label Number	Part Number	Description	Qty
7-33-1	59165	NA	NA	LP Air Supply Filter	1
NA	59165	ALP-F-1 ALP-F-2	4326GG-20VN	NA	NA
-2	59165	NA	4326G-C	Case	1
-3	59165	NA	416G-20VN	Filter Element	1
-4	59165	NA	591218	Seal O-Ring (Element)	1
-5	59165	NA	592418	Seal O-Ring (Case Plug)	1
-6	59165	NA	4326G-P	Case Plug	1

Downloaded from http://www.everyspec.com

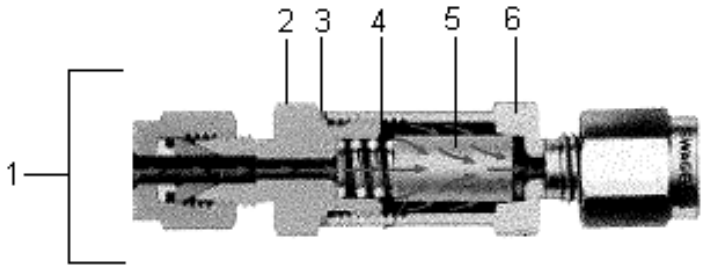

Figure 7-34. LP Oxygen and Mixed Gas Supply Filter
(OLP-F-1, OLP-F-2, MLP-F-1)

Table 7-34. Parts List for LP Oxygen and Mixed Gas Supply Filter

Fig./Index Number	CAGE Code	Label Number	Part Number	Description	Qty
7-34-1	02570	NA	NA	LP Oxygen and Mixed Gas Supply Filter	1
NA	02570	OLP-F-1 OLP-F-2 MLP-F-1	B-8TF2-15	NA	NA
-2	02570	NA	NA	Inlet Body	1
-3	02570	NA	NA	O-Ring	1
-4	02570	NA	NA	Retaining Spring and Washer	1
-5	02570	NA	M-8F-K4-15	Filter Element	1
-6	02570	NA	NA	Outlet Body	1
Replaceable Parts					
NA	02570	NA	SS-8TF-K2	Filter Gasket	1
NA	02570	NA	SS-8F-K4-15	Sintered Element	1

Downloaded from http://www.everyspec.com

THIS PAGE INTENTIONALLY LEFT BLANK

Downloaded from http://www.everyspec.com

CHAPTER 8

INSTALLATION

8-1 INTRODUCTION.

This chapter contains information about packing and unpacking, transportation, and installation of the Standard Navy Double-Lock Recompression Chamber System (SNDLRCS).

8-2 STARTUP, SHUTDOWN, AND PREPARATION FOR SHIPMENT/LAYUP.

Detailed procedures for shutdown, preparation for shipment and startup of the SNDLRCS are provided in the Operating Procedures (OP) checklists in Appendix A. All subsystem components, material, and equipment must be properly stowed and secured prior to shipment.

8-3 TRANSPORTATION AND SHIPPING.

The SNDLRCS is a modular, containerized support facility that can be transported rapidly by land, sea, or air. The dimensions of the SNDLRCS van are 20’ x 8’ x 8’.

The shipping weight of the fully loaded SNDLRCS van is approximately 22,000 pounds. Without the Air Supply Rack Assembly (ASRA), the SNDLRCS van weighs approximately 19,000 pounds.

Requirements to identify, pack, label, and transport hazardous material are beyond the scope of this manual. Refer to *Preparing Hazardous Materials for Military Air Shipments*, Naval Supply Systems Command (NAVSUP) Publication 505, and the Code of Federal Regulations (49CFR) for guidance in handling materials such as the O_2/CO_2 Calibration Gas Kit, oxygen flasks, and an ASRA.

8-4 SITE INFORMATION.

Depending on mission site constraints, SNDLRCS placement considerations include allowing for the following:

- Enough space to accommodate the SNDLRCS van and any external certified oxygen or mixed gas racks that will be attached to the van
- Electrical power connection
- Appropriate clearance for all doors to provide access in case of fire or medical emergency
- Special considerations when aboard ship, such as:
    - Deck strong enough to support 25,000 lb (the 22,000-lb SNDLRCS van, plus a 3,000-lb allowance for people and their personal belongings)
    - Tie-downs of appropriate number and strength to hold the SNDLRCS van in place
    - Height clearance for incoming helicopters

See section 8-7 for additional considerations when installing the SNDLRCS van.

8-4.1 ENVIRONMENTAL CONDITIONS. The SNDLRCS has been designed to withstand environmental conditions as shown in Table 8-1.

Downloaded from http://www.everyspec.com

Table 8-1. Environmental and Weather Conditions the SNDLRCS Can Withstand

Environmental Conditions	
Sea State, Operational Mode, Treatment	5 (significant wave height = 2.5 – 4.0 m or 8.2 – 13.1 ft)
Outside Air Temperature Range, Operational Mode	-17.8° C (0° F) to 43.3° C (110° F) inclusive
Weather Conditions	
Wind/Rain/Weather	Weathertight van

8-5 TOOLS AND MATERIAL REQUIRED FOR INSTALLATION.

Only common hand tools are required for SNDLRCS installation. The only material requirement is a source of 440-volt, 3-phase, 30-amp, 60-hertz, or 208-volt, single phase, 50-amp, 60-hertz electrical power.

Power cable assemblies are provided with the van for interconnection of the supply source to the van input power receptacle. There are three power cable assemblies: one for the 208-volt supply and two for the 440-volt supply.

The power cable assembly for the 208-volt supply is a Marinco, Catalog No. 6152CR, that is 50 feet long, rated at 50 amps, and is provided with male and female locking connectors at opposite ends.

For the 440-volt supply, two cable assemblies are provided:

- One assembly is 10 feet long with lugged connections on one end and a mating connector (Crouse-Hinds, Catalog No. APJ10487) for the van input power receptacle box on the other end.
- The other assembly is 100 feet long with male and female connectors at opposite ends (Crouse-Hinds, Catalog Nos. APR10465 and APJ10487). The assembly provides 100 feet of extension between the first cable assembly (or ship facility receptacle) and the van input power receptacle box.

8-6 UNPACKING AND REPACKING.

Refer to Appendix A, SNDLRCS Operating Procedures, for all unpacking and repacking instructions. These procedures are to be followed only by certified divers who have been trained to operate this equipment.

8-7 INPUT REQUIREMENTS.

The SNDLRCS van requires the following inputs.

a. Electrical Power. The SNDLRCS van requires a source of electrical power, as described in section 8-5.

b. Air/O_2/Mixed Gas. The SNDLRCS van normally contains both an air supply and an oxygen supply. The air supply is an Air Supply Rack Assembly (ASRA) and the oxygen supply is a rack of four oxygen T-bottles. However, the van is also equipped with a Bulkhead Transition Panel that allows air, oxygen, and mixed gas to be supplied to the recompression chamber via external certified racks, such as an Oxygen Supply Rack Assembly (OSRA) and a Helium-

Downloaded from http://www.everyspec.com

Oxygen Supply Rack Assembly (HOSRA). The SNDLRCS van contains the hose assemblies required to connect external certified racks.

8-8 INSTALLATION PROCEDURES.

Prior to setup and operation, the SNDLRCS van and support components must be safely transported, rigged, and installed on the host vessel or other area (pier, parking lot, or other location, as dictated by the operational parameters). To install the unit proceed as follows:

WARNING

The fully equipped SNDLRCS van weighs 22,000 pounds (11 tons). Verify that all rigging components, cranes, or forklifts are rated to handle at least 30,000 pounds (15 tons) prior to lifting the unit from the transport vehicle. Limit the personnel in the immediate area to those required to rig, lift, and position the equipment. Stand clear of components during rigging and lifting.

a. Transport the SNDLRCS van by truck, barge, or other transport to the operational site or support facility.

b. Verify that the area on the host vessel or operational site is clear of obstructions and that adequate space is available to position the SNDLRCS van, auxiliary generator (if required), air compressor (if required), Fly Away Dive System (FADS) III air storage rack, electrical cables, and air hoses. Verify that there is adequate space to erect the operator vestibule.

c. Using the appropriately rated rigging equipment, crane, or forklift, preposition the SNDLRCS van for hoisting aboard the host vessel or to the operational site.

d. Following standard safety precautions for cargo handling, rig the SNDLRCS van and auxiliary equipment on the host vessel or operational site. Level the van. If installed upon a host vessel, secure the van and auxiliary equipment to the deck by using tie-down chains to existing deck tie-downs or temporary welded pad eyes.

DANGER

Failure to properly ground the SNDLRCS van may result in injury or death to personnel.

e. Ground the SNDLRCS van. The SNDLRCS van should be properly grounded at the power supply source ground via the power supply cables. The power supply cables provided with the SNDLRCS van are configured with ground wires that satisfy this requirement and function.

As an additional safety measure, the SNDLRCS van should also be grounded via the ground stud in the input power receptacle box using a separate grounding wire assembly that is provided with the van. This assembly consists of a #8 AWG, flexible strand copper cable that is 50’ long, an 8’ copper grounding rod, and a copper plate. One end of the copper cable should be connected to the ground stud in the input power receptacle box. The other end should be connected to one of the following:

- The grounding rod, which is installed at the site when grounding on land
- The copper plate, which is dropped in the water from pierside or from a ship if the ship’s hull cannot provide suitable grounding

Downloaded from http://www.everyspec.com

- The hull of a vessel from which the SNDLRCS is receiving power
- The ground of a generator from which the SNDLRCS is receiving power

f. Erect and level the operator vestibule.

8-9 INSTALLATION CHECKOUT.

Refer to Appendix A, SNDLRCS Operating Procedures (OPs), for all setup and operating instructions. These instructions are supplemented by the information in Chapters 2 and 3, and are to be followed only by certified divers who have been trained to operate this equipment.

Appendix B, SNDLRCS Emergency Procedures (EPs), contains instructions to be followed in the event of an emergency.

Downloaded from http://www.everyspec.com

APPENDIX A

STANDARD NAVY DOUBLE-LOCK RECOMPRESSION CHAMBER SYSTEM (SNDLRCS) OPERATING PROCEDURES

OPERATING PROCEDURES LIST

SNDLRCS OP-1	SNDLRCS SETUP
SNDLRCS OP-2	MEDICAL LOCK OPERATION
SNDLRCS OP-3	SNDLRCS MODIFIED SHUTDOWN
SNDLRCS OP-4	SNDLRCS MODIFIED STARTUP
SNDLRCS OP-5	SNDLRCS SHUTDOWN FOR SHIPMENT/LAYUP
SNDLRCS OP-6	AIR SUPPLY RACK ASSEMBLY (ASRA) CHARGING PROCEDURES
SNDLRCS OP-7	PROCEDURES FOR CHARGING AIR SUPPLY RACK ASSEMBLY (ASRA) DURING OPERATION
SNDLRCS OP-8	SCUBA BOTTLE CHARGING PROCEDURES
SNDLRCS OP-9	OXYGEN BOTTLE IN-PLACE CHARGING PROCEDURES

Downloaded from http://www.everyspec.com

THIS PAGE INTENTIONALLY LEFT BLANK

Downloaded from http://www.everyspec.com

STANDARD NAVY DOUBLE-LOCK RECOMPRESSION CHAMBER SYSTEM (SNDLRCS) OPERATING PROCEDURE

SNDLRCS OP-1

SNDLRCS SETUP

Date: December 1, 2007

OP ASSIGNED TO: _____ DATE:_____

SPECIAL INSTRUCTIONS

(1) ENSURE THIS OP IS VALID BY CHECKING THE REVISION DATE ABOVE WITH THE CURRENT SNDLRCS O&M MANUAL.
(2) EACH STEP SHOULD BE CHECKED INDIVIDUALLY.
(3) REPORT ANY DISCREPANCY TO THE DIVING SUPERVISOR.

SNDLRCS OPERATOR: _____

DIVING SUPERVISOR: _____

Downloaded from http://www.everyspec.com

ITEM	COMPONENT	DESCRIPTION	PROCEDURE	LOCATION	CHECK	NOTE

NOTE

If SNDLRCS is to be used interfaced with the FADS III Air or FMGS, the SNDLRCS ASRA may supply air to the CCA or MGCCA. The Diving Supervisor shall ensure that this OP steps 17-25 and FADS III Air OP-2 steps 18-27 or FMGS OP-2 8-12 are run concurrently.

If the FADS III FMGS OSRA is used to supply oxygen to the SNDLRCS, the Diving Supervisor shall ensure that this OP steps 57-72 and FMGS OP-5 steps 7-15 are run concurrently.

If the FADS III FMGS HOSRA is used to supply helium oxygen to the SNDLRCS, the Diving Supervisor shall ensure that FMGS OP-4 is completed before starting steps 79-89 of this OP.

WARNING

The SNDLRCS van contains pressurized oxygen flasks. Open van doors and allow space to ventilate prior to energizing electrical equipment. Turn on Van Oxygen Monitor and confirm that oxygen levels are not elevated.

1	Remove SNDLRCS van O_2 monitor from van		
2	Hold the “ON/OFF” switch down in the “BAT TEST” position. Check battery condition, replace batteries if necessary		
3	Calibrate analyzer in ambient air. Adjust the “CALIBRATE” control knob until meter reads 21%		
4	Check “HI ALARM” by setting “HI ALARM” set point below 21%. Audible and visual alarm should activate. Readjust “HI ALARM” set point to 23%.		
5	Ensure “LO ALARM” set point is below 21%		
6	Install O_2 monitor back in mount		
7	Remove AC and ECS access covers, and uncap AC drains.		
8	Remove cap from chamber exhaust and install elbow/screen assembly		
9	Remove SNDL manway access cover from van		

SET UP SNDLRCS VAN ELECTRICAL SYSTEM.

CAUTION

For shipboard use, detach grounding cable from grounding rod and attach grounding cable to suitable shipboard ground to prevent shock hazard to personnel.

The SNDLRCS van must be grounded to an earth ground. Ensure external earth ground system is connected to ground lug in power entry panel to prevent shock hazard to personnel.

WARNING

Incorrect electrical hookup will cause equipment damage and/or personnel injury. It is imperative that the power source (ship, shore, or generator), the power panel receptacle and power cable, and the breaker are all set for the same voltage (either 440 volts or 208 volts).

Downloaded from http://www.everyspec.com

ITEM	COMPONENT	DESCRIPTION	PROCEDURE	LOCATION	CHECK	NOTE
10	Ensure manual BUS is OFF – Main Breaker OFF					
11	Connect SNDLRCS van to primary power source. Have secondary power source ready. Primary power source voltage: 440V 220V					
12	Manual Bus Transfer Switch		Turn ON to selected primary power source (440V or 220V).	Transfer Switch		
13	120/240 Load Distribution Panel	Main Breaker and all breakers to be used	Turn on.	120/240 Load Distribution Panel		
14	On/Off/Test Button		Press and release to turn on.	UPS		
PREDIVE CHECKLIST						
15	Conduct visual inspection of SNDLRCS and gas racks for damage.					

NOTE

Any damage to the SNDLRCS shell or ASRA must be reported to NAVSEA 00C prior to conducting chamber operations.

16	Ensure all valves, except for gauge stop valves, are closed and all regulators are backed off on SNDL, reducing station and ASRA. Ensure all gauge stop valves are open.		

SET UP AIR SUPPLY RACK ASSEMBLY (ASRA)

DANGER

The ASRA must be positioned and secure before operation. Movement during operation can result in equipment damage, personnel injury, or death.

The following ports have been chosen as primary (P) and secondary (S) supplies:

Port A - Primary supply to Air Reducing Station

Port C - Secondary supply to Air Reducing Station

Port A is supplied by the following bank(s): 1 2

Port C is supplied by the following bank: 3

DANGER

PRIMARY and SECONDARY tags must be affixed to Port A and Port C valve handles of the ASRA. Removal or swapping of tags can result in injury or death by changing air supply or pressure to the diver or system.

Downloaded from http://www.everyspec.com

ITEM	COMPONENT	DESCRIPTION	PROCEDURE	LOCATION	CHECK	NOTE
NOTE **If ASRA is being used outside of SNDLRCS van, skip to step 26. If ASRA is being used inside of the SNDLRCS van, proceed with steps 17 to 25 then skip to step 37.**						
CONNECTING AIR SUPPLY HOSES FROM ASRA DIRECTLY TO AIR REDUCING STATION						
17	Inspect the two HP air hose assemblies for damage.					
18	Port A Bleed Valve	AHP-V-442	Open.	ASRA		
19	Primary HP Air Hose Assembly	H-436	Connect hose and tighten $^{3}/_{8}$ to ½ turn after O-ring has engaged. Connect strain relief.	ASRA Port A		
20	Port A Bleed Valve	AHP-V-442	Close.	ASRA		
21	Primary HP Air Hose Assembly	H-436	Connect hose to primary air supply fitting. Connect strain relief.	Air reducing station		
22	Port C Bleed Valve	AHP-V-440	Open.	ASRA		
23	Secondary HP Air Hose Assembly	H-436	Connect hose and tighten to $^{3}/_{8}$ ½ turn after O-ring has engaged. Connect strain relief.	ASRA Port C		
24	Port C Bleed Valve	AHP-V-440	Close.	ASRA		
25	Secondary HP Air Hose Assembly	H-436	Connect hose to secondary air supply fitting. Connect strain relief. Proceed to Step 37	Air reducing station		
CONNECTING AIR SUPPLY HOSES FROM ASRA THROUGH THE BULKHEAD TRANSITION PANEL						
26	Ensure Hose H-436 is disconnected from air reducing station					
27	Position ASRA outside of SNDLRCSRCS van and secure.					
28	Inspect the two HP air hose (H-436) assemblies for damage.					
29	Port A Bleed Valve	AHP-V-442	Open.	ASRA		
30	Primary HP Air Hose Assembly	H-436	Connect hose and tighten $^{3}/_{8}$ to ½ turn after O-ring has engaged. Connect strain relief.	ASRA Port A		
31	Port A Bleed Valve	AHP-V-442	Close.	ASRA		
32	Primary HP Air Hose Assembly	H-436	Connect hose to primary air supply fitting. Connect strain relief.	Outside of Bulkhead Transition Panel		

Downloaded from http://www.everyspec.com

ITEM	COMPONENT	DESCRIPTION	PROCEDURE	LOCATION	CHECK	NOTE
33	Port C Bleed Valve	AHP-V-440	Open.	ASRA		
34	Secondary HP Air Hose Assembly	H-436	Connect hose and tighten $^{3}/_{8}$ to ½ turn after O-ring has engaged. Connect strain relief.	ASRA Port C		
35	Port C Bleed Valve	AHP-V-440	Close.	ASRA		
36	Secondary HP Air Hose Assembly	H-436	Connect hose to secondary air supply fitting. Connect strain relief.	Outside of Bulkhead Transition Panel		
37	Flask Isolation Valves	AHP-V-401	Open slowly.	ASRA		
		AHP-V-402	Open slowly.	ASRA		
		AHP-V-403	Open slowly.	ASRA		
		AHP-V-404	Open slowly.	ASRA		
		AHP-V-405	Open slowly.	ASRA		
		AHP-V-406	Open slowly.	ASRA		
		AHP-V-407	Open slowly.	ASRA		
		AHP-V-408	Open slowly.	ASRA		
		AHP-V-409	Open slowly.	ASRA		
38	BANK 1 Gauge (Primary)	AHP-G-437	Record pressure: _____psig.	ASRA		
	BANK 2 Gauge (Primary)	AHP-G-438	Record pressure: _____psig.	ASRA		
	BANK 3 Gauge (Secondary)	AHP-G-439	Record pressure: _____psig.	ASRA		

NOTE

Bank 3 Secondary (minimum of 4800 psig); if not, charge in accordance with OP-6.

SETTING UP PORT A OF ASRA

39	Manifold Valve	AHP-V-444	Open.	ASRA		
40	Port A Valve	AHP-V-443	Open.	ASRA		

NOTE

Circle the bank that will be used to supply primary air and that will back up the primary bank.

Primary supply: 1 2.

Standby supply: 1 2.

If 1 is selected for primary supply, perform step 41, and then skip to step 43.

If 2 is selected for primary supply, skip to step 42.

41	BANK 1 Manifold Valve	AHP-V-420	Open. Tag as Primary.	ASRA		

Downloaded from http://www.everyspec.com

ITEM	COMPONENT	DESCRIPTION	PROCEDURE	LOCATION	CHECK	NOTE
42	BANK 2 Manifold Valve	AHP-V-421	Open. Tag as Primary.	ASRA		
SETTING UP PORT C OF ASRA						
43	Port C Valve	AHP-V-422	Open. Tag as secondary.	ASRA		
SETTING UP AIR REDUCING STATION						
44	Primary HP Air Supply Valve	AHP-V-101	Open slowly.	Air reducing station		
45	Primary HP Air Supply Gauge	AHP-G-102	Record pressure: _____ psig.	Air reducing station		
46	Primary HP Air Regulator	AHP-R-108	Load to 250 psig.	Air reducing station		
47	Primary LP Air Supply Gauge	ALP-G-101	Record pressure: _____ psig.	Air reducing station		
48	Secondary HP Air Supply Valve	AHP-V-102	Open slowly.	Air reducing station		
49	Secondary HP Air Supply Gauge	AHP-G-103	Record pressure: _____ psig.	Air reducing station		
50	Secondary HP Air Regulator	AHP-R-109	Load to 250 psig.	Air reducing station		
51	Secondary LP Air Supply Gauge	ALP-G-104	Record pressure: _____ psig.	Air reducing station		
SETTING UP OXYGEN SYSTEM						
NOTE **When using oxygen bottles inside the van, proceed with steps 52-56 then skip to step 78.** **When using another certified oxygen source or interfacing with the OSRA, skip to step 57.**						
SETTING UP OXYGEN BOTTLES						
52	Primary and Secondary HP Hose Assembly	H-218 H-219 H-220 H-221	Ensure hoses to oxygen flask stop valves are attached	Oxygen bottles		
53	Primary Flask Stop Valves		Open slowly.	Oxygen bottles		
54	Primary HP Oxygen Supply Gauge	OHP-G-201	Record pressure: _____ psig.	Oxygen reducing station		

Downloaded from http://www.everyspec.com

ITEM	COMPONENT	DESCRIPTION	PROCEDURE	LOCATION	CHECK	NOTE
55	Secondary Flask Stop Valve		Open slowly.	Oxygen Bottles		
56	Secondary HP Oxygen Supply Gauge	OHP-G-202	Record pressure: _____ psig.	Oxygen reducing station		
SETTING UP OXYGEN TO USE OTHER CERTIFIED OXYGEN RACK/SOURCE						
57	Inspect two HP oxygen hose assemblies for damage.					
58	Ensure T- or K-bottles are installed, and primary and secondary hose assemblies H-218, H-219, H-220, and H-221 are connected.					
59	Primary and Secondary Flask Stop Valves	Installed T- or K-bottles	Close	Oxygen Bottles		
60	Port A Bleed Valve	OXHP-V-741	Open.	OSRA		
61	Primary HP Oxygen Hose Assembly		Connect hose and tighten $^{3}/_{8}$ to ½ turn after O-ring has engaged. Connect strain relief.	OSRA Port A		
62	Port A Bleed Valve	OXHP-V-741	Close.	OSRA		
63	Primary HP Oxygen Hose Assembly		Connect hose to primary oxygen supply fitting. Connect strain relief.	Outside of Bulkhead Transition Panel		
64	Port B Bleed Valve	OXHP-V-740	Open.	OSRA		
65	Secondary HP Oxygen Hose Assembly		Connect hose and tighten $^{3}/_{8}$ to ½ turn after O-ring has engaged. Connect strain relief.	OSRA Port B		
66	Port B Bleed Valve	OXHP-V-740	Close.	OSRA		
67	Secondary HP Oxygen Hose Assembly		Connect hose to secondary oxygen supply fitting. Connect strain relief.	Outside of Bulkhead Transition Panel		
68	Gauge Stop Valve	OXHP-V-727	Verify Open.	OSRA		
		OXHP-V-728	Verify Open.	OSRA		
69	Flask Isolation Valves	OXHP-V-704	Open slowly.	OSRA		
		OXHP-V-705	Open slowly.	OSRA		
		OXHP-V-706	Open slowly.	OSRA		
		OXHP-V-707	Open slowly.	OSRA		
		OXHP-V-708	Open slowly.	OSRA		
		OXHP-V-709	Open slowly.	OSRA		
70	BANK 2 Gauge (Primary)	OXHP-G-738	Record pressure: _____psig.	OSRA		

Downloaded from http://www.everyspec.com

ITEM	COMPONENT	DESCRIPTION	PROCEDURE	LOCATION	CHECK	NOTE
71	BANK 3 Gauge (Secondary)	OXHP-G-739	Record pressure: _____psig.	OSRA		
72	BANK 2 Manifold Valve	OXHP-V-721	Open	OSRA		
73	BANK 3 Manifold Valve	OXHP-V-722	Open	OSRA		
74	Primary HP Oxygen External Supply Shutoff Valve	OHP-V-201	Open	Oxygen reducing station		
75	Primary HP Oxygen Supply Gauge	OHP-G-201	Record pressure: _____ psig.	Oxygen reducing station		
76	Secondary HP Oxygen External Supply Shutoff Valve	OHP-V-203	Open	Oxygen reducing station		
77	Secondary HP Oxygen Supply Gauge	OHP-G-202	Record pressure: _____ psig.	Oxygen reducing station		
NOTE **If using mixed gas, continue with step 78; if not, skip to step 89.**						
SETTING UP HELIUM OXYGEN 50/50 CHAMBER USING HOSRA						
78	Port C Bleed Valve	HEOXLP-V-642	Open.	HOSRA		
79	Helium-Oxygen HP Hose Assembly		Connect hose and tighten $^{3}/_{8}$ to ½ turn after O-ring has engaged. Connect strain relief.	HOSRA Port C		
80	Port C Bleed Valve	HEOXLP-V-642	Close.	HOSRA		
81	Helium-Oxygen HP Hose Assembly		Connect hose to primary oxygen supply fitting. Connect strain relief.	Outside of Bulkhead Transition Panel		
82	Gauge Stop Valve	HEOXHP-V-627	Verify Open.	HOSRA		
		HEOXLP-V-648	Verify Open.	HOSRA		
83	Flask Isolation Valves	HEOXHP-V-604	Open slowly.	HOSRA		
		HEOXHP-V-605	Open slowly.	HOSRA		
		HEOXHP-V-606	Open slowly.	HOSRA		
		HEOXHP-V-607	Open slowly.	HOSRA		
84	BANK 2 Gauge (50/50 CHAMBER)	HEOXHP-G-638	Record pressure: _____psig.	HOSRA		
85	HP Supply Valve	HEOXHP-V-646	Open.	HOSRA		
86	Port C Regulator	HEOXHP-V-647	Load to 75 - 100 psig.	HOSRA		

Downloaded from http://www.everyspec.com

ITEM	COMPONENT	DESCRIPTION	PROCEDURE	LOCATION	CHECK	NOTE
87	Port C Pressure Gauge	HEOXLP-V-643	Record pressure: _____psig.	HOSRA		
88	Port C Valve	HEOXLP-V-644	Open tag as 50/50 Chamber.	HOSRA		
SETTING UP OXYGEN REDUCING STATION						
89	Primary HP Oxygen Regulator	OHP-R-206	Load to 75 - 100 psig.	Oxygen reducing station		
90	Primary LP Oxygen Supply Gauge	OLP-G-204	Record pressure: _____ psig.	Oxygen reducing station		
91	Secondary HP Oxygen Regulator	OHP-R-205	Load to 75 - 100 psig.	Oxygen reducing station		
92	Secondary LP Oxygen Supply Gauge	OLP-G-203	Record pressure: _____ psig.	Oxygen reducing station		
THIS COMPLETES LINEUP OF PRIMARY AND SECONDARY AIR, OXYGEN, and MIXED GAS WITH GAS PRESSURE UP TO: ALP-V-3 PRIMARY AIR ALP-V-9 SECONDARY AIR OLP-V-2 PRIMARY OXYGEN OLP-V-4 SECONDARY OXYGEN MLP-V-2 MIXED GAS						
CHAMBER SETUP						
93	ECS Hot or Cold Water Supply	ECS-V-1	Open.	End of chamber		
94	ECS Hot or Cold Water Return	ECS-V-2	Open.	End of chamber		
95	IL BIBS Exhaust Hull Stop Valve	EXH-V-2	Verify open.	End of chamber		
96	Pressure Relief Hull Stop Valve	ATM-V-9	Wired open.	Under control console		
97	Medical Lock Inner And Outer Doors		Closed with safety interlock engaged	Medical lock		
98	IL Exhaust Valve	EXH-V-7	Verify open.	Under control console		
99	OL Exhaust Valve	EXH-V-9	Verify open.	Under control console		

Downloaded from http://www.everyspec.com

ITEM	COMPONENT	DESCRIPTION	PROCEDURE	LOCATION	CHECK	NOTE
100	OL BIBS Exhaust Hull Stop Valve	EXH-V-4	Verify open.	Under control console		
101	Gas Sample Hull Stop Valve	ATM-V-11	Verify open.	Top of chamber		
102	Gas Sample Hull Stop Valve	ATM-V-13	Verify open.	Top of chamber		
103	IL BIBS Back Pressure Regulator Tracking Hull Valve	ATM-V-12	Verify open	Top of chamber		
104	OL BIBS Back Pressure Regulator Tracking Hull Valve	ATM-V-14	Verify open	Top of chamber		
105	IL Primary Depth Gauge Hull Stop Valve	ATM-V-2	Verify open.	Top of chamber		
106	IL Secondary Depth Gauge Hull Stop Valve	ATM-V-4	Verify open.	Top of chamber		
107	OL Primary Depth Gauge Hull Stop Valve	ATM-V-6	Verify open.	Top of chamber		
108	OL Secondary Depth Gauge Hull Stop Valve	ATM-V-8	Verify open.	Top of chamber		
109	OL Primary Depth Gauge Valve	ATM-V-5	Verify open.	Control console		
110	IL Primary Depth Gauge Valve	ATM-V-1	Verify open.	Control console		
111	IL Secondary Depth Gauge Valve	ATM-V-3	Verify open.	Control console		
112	OL Secondary Depth Gauge Valve	ATM-V-7	Verify open.	Control console		
113	Primary LP Air Supply Gauge	ALP-G-1	Record pressure: _____psig.	Control console		
114	Secondary LP Air Supply Gauge	ALP-G-2	Record pressure: _____psig.	Control console		
115	Primary LP Air Shutoff Valve	ALP-V-3	Open.	Control console		
116	Primary LP Air Cross Connect Valve	ALP-V-4	Open.	Control console		

Downloaded from http://www.everyspec.com

ITEM	COMPONENT	DESCRIPTION	PROCEDURE	LOCATION	CHECK	NOTE
117	Secondary LP Air Cross Connect Valve	ALP-V-10	Open.	Control console		
118	Secondary LP Air Shutoff Valve	ALP-V-9	Verify shut	Control console		
119	Turn on chamber lighting and scrubber. Ensure that they are working. Verify temperature indicator is working.					
120	Ensure headsets are installed inside IL, OL and outside the chamber. Check communications and adjust volumes as necessary. Check sound powered phone.					
121	Ensure scrubber canister installed.					
122	ECS ON/OFF		Switch ON.	Control console		
123	Ensure coolant fluid level is visible in sight glass on ECS					
124	ECS ON/OFF Switch		Switch ON.	ECS		
125	Verify flow with flow indicator at end of chamber					
126	ECS Hot/Cool Switch		Switch to cool; verify it works.	ECS		
127	ECS ON/OFF		Switch OFF.	Control console		
128	ECS ON/OFF/ REMOTE Switch		Switch OFF.	ECS		
SET UP OXYGEN ANALYZER						
129	Oxygen Analyzer		On.	Control console		
130	Remove sampling cap to expose the analyzer sensor to clean air for two minutes and adjust the calibration knob until the display reads the correct oxygen level (20.9% at sea level).			Control console		
131	Reconnect sampling cap onto analyzer sensor.			Control console		
NOTE **If using mixed gas, continue with step 132; if not, skip to step 139.**						
BIBS CHECK MIXED GAS						
132	Ensure four BIBS masks are connected to mixed gas BIBS manifold in the IL.					
133	Mixed Gas Hull Stop Valve	MLP-V-4	Open.	Under control console		
134	LP Mixed Gas Shutoff Valve	MLP-V-2	Open.	Control console		
135	Audible check for gas leaks. Sample mixed gas with Oxygen Analyzer. Ensure proper oxygen percentage.					

Downloaded from http://www.everyspec.com

ITEM	COMPONENT	DESCRIPTION	PROCEDURE	LOCATION	CHECK	NOTE
136	Breathe several times on each mask to verify good BIBS supply.					
137	LP Mixed Gas Shutoff Valve	MLP-V-2	Shut.	Control console		
138	Breathe each BIBS mask down.					
	BIBS CHECK AIR					
139	Ensure four BIBS masks are connected to air BIBS manifold in the IL and three BIBS masks are connected to air BIBS manifold in the OL.					
140	IL BIBS Exhaust BPR Bypass Valve	EXH-V-1	Shut	Under control console		
141	IL BIBS Air Supply Stop Valve	ALP-V-11	Open.	Under control console		
142	OL BIBS Exhaust BPR Bypass Valve	EXH-V-3	Shut	Under control console		
143	OL BIBS Air Supply Stop Valve	ALP-V-15	Open.	Under control console		
144	Audible check for gas leaks.					
145	Breathe several times on each mask to verify good BIBS supply.					

NOTE

Circle the oxygen supply that will be "in-use" and the oxygen supply that will be used for "standby".

In-use supply: Primary Secondary

Standby supply: Primary Secondary

	BIBS CHECK OXYGEN STANDBY SUPPLY					
146	Ensure four BIBS masks are connected to oxygen BIBS manifold in the IL and three BIBS masks are connected to oxygen BIBS manifold in the OL.					
147	IL BIBS Oxygen Hull Stop Valve	OLP-V-6	Open.	Under control console		
148	OL BIBS Oxygen Hull Stop Valve	OLP-V-8	Open.	Under control console		
149	Primary or Secondary LP Oxygen Supply Valve	OLP-V-2 or OLP-V-4 (Circle one)	Open. Tag as "standby".	Control console		
150	LP Oxygen Supply Gauge	OLP-G-1	Record pressure: _____psig.	Control console		

Downloaded from http://www.everyspec.com

ITEM	COMPONENT	DESCRIPTION	PROCEDURE	LOCATION	CHECK	NOTE
151	Audible check for gas leaks.					
152	Breathe several times on each mask to verify good BIBS supply.					
153	Primary or Secondary LP Oxygen Supply Valve	OLP-V-2 or OLP-V-4 (Circle one)	Shut.	Control console		
BIBS CHECK OXYGEN IN-USE SUPPLY						
154	Primary or Secondary LP Oxygen Supply Valve	OLP-V-2 or OLP-V-4 (Circle one)	Open. Tag as “in use”.	Control console		
155	LP Oxygen Supply Gauge	OLP-G-1	Record pressure: _____psig.	Control console		
156	Audible check for gas leaks.					
157	Breathe several times on each mask to ensure good BIBS supply.					
158	Ventilate chamber with door open. Briefly crack open ALP-V-5 and ALP-V-13 pressurization valves.					
SET UP CARBON DIOXIDE ANALYZER						
159	Warm-up CO_2 Analyzer (Analox CO_2 Buddy).			Control console		
	Press and hold CO_2 button.					
	All lights will flash 4 times and buzzer will sound 4 beeps.					
	Warm-up takes 40 seconds. Yellow fault light will extinguish and green “ok” light will flash every 2 seconds.					
160	Calibration Check			Control console		
	Connect CO_2 cal gas to flowmeter (ATM-FL-1).					
	Adjust flowmeter to .5 1/min.					
	Let analyzer stabilize.					
	Alarm red warning light will flash and buzzer will sound every 2 seconds.					
	Verify analyzer reads within 0.1% of cal gas percentage					
	Disconnect cal gas and remove flow adapter to clear cal gas from analyzer					
	Replace flow adapter once analyzer green “ok” light returns.					
CHAMBER AND MEDICAL LOCK SEAL CHECK						
161	Complete chamber pre-dive checklist.					
162	Ensure chamber door seals are lubricated with MIL-G-27617 Type 2 or 3					

Downloaded from http://www.everyspec.com

ITEM	COMPONENT	DESCRIPTION	PROCEDURE	LOCATION	CHECK	NOTE
163	Pressurize the chamber and medical lock to 10 fsw, check for audible leaks and ensure that there is no significant loss of pressure for a 5-minute period.					
- END OF PROCEDURE -						

Downloaded from http://www.everyspec.com

STANDARD NAVY DOUBLE-LOCK RECOMPRESSION CHAMBER SYSTEM (SNDLRCS) OPERATING PROCEDURE

SNDLRCS OP-2

MEDICAL LOCK OPERATION

Date: December 1, 2007

OP ASSIGNED TO: _____ DATE:_____

SPECIAL INSTRUCTIONS

(1) ENSURE THIS OP IS VALID BY CHECKING THE REVISION DATE ABOVE WITH THE CURRENT SNDLRCS O&M MANUAL.
(2) EACH STEP SHOULD BE CHECKED INDIVIDUALLY.
(3) REPORT ANY DISCREPANCY TO THE DIVING SUPERVISOR.

SNDLRCS OPERATOR: _____

DIVING SUPERVISOR: _____

Downloaded from http://www.everyspec.com

ITEM	COMPONENT	DESCRIPTION	PROCEDURE	LOCATION	CHECK	NOTE
TRANSFER ITEM TO INSIDE CHAMBER AS FOLLOWS:						
1	Medical Lock Equalization Control Valve	EQ-V-2	Shut.	Left side medical lock		
2	Medical Lock Vent Valve	EQ-V-1	Turn to exhaust.	Upper left of medical lock		
3	Outside tender, place items in medical lock, then close door.					
4	Medical Lock Vent Valve	EQ-V-1	Turn to pressurize.	Upper left of medical lock		
5	Medical Lock Equalization Control Valve	EQ-V-2	Open slowly.	Left side medical lock		
6	Inside tender, remove items in medical lock, then close door.					
TRANSFER ITEM TO OUTSIDE CHAMBER AS FOLLOWS:						
7	Medical Lock Equalization Control Valve	EQ-V-1	Turn to pressurize.	Upper left side medical lock		
8	Medical Lock Equalization Control Valve	EQ-V-2	Open slowly.	Left side medical lock		
9	Inside tender, place items in medical lock, then close door.					
10	Medical Lock Equalization Control Valve	EQ-V-2	Shut.	Left side medical lock		
11	Medical Lock Vent Valve	EQ-V-1	Turn to exhaust.	Upper left of medical lock		
12	Outside tender, remove items in medical lock, then close door.					
- END OF PROCEDURE -						

Downloaded from http://www.everyspec.com

STANDARD NAVY DOUBLE-LOCK RECOMPRESSION CHAMBER SYSTEM (SNDLRCS) OPERATING PROCEDURE

SNDLRCS OP-3

SNDLRCS MODIFIED SHUTDOWN

Date: December 1, 2007

OP ASSIGNED TO: _____ DATE:_____

SPECIAL INSTRUCTIONS

(1) ENSURE THIS OP IS VALID BY CHECKING THE REVISION DATE ABOVE WITH THE CURRENT SNDLRCS O&M MANUAL.
(2) EACH STEP SHOULD BE CHECKED INDIVIDUALLY.
(3) REPORT ANY DISCREPANCY TO THE DIVING SUPERVISOR.

SNDLRCS OPERATOR: _____

DIVING SUPERVISOR: _____

Downloaded from http://www.everyspec.com

ITEM	COMPONENT	DESCRIPTION	PROCEDURE	LOCATION	CHECK	NOTE
NOTE **If the SNDLRCS is interfaced with the FADS III Air or FMGS, the Diving Supervisor shall ensure that diving operation are completed prior to conducting this OP.**						
1	Port A	AHP-V-443	Shut.	ASRA		
2	Port C	AHP-V-422	Shut.	ASRA		
3	Secondary LP Air Shutoff Valve	ALP-V-9	Open	Control console		
4	IL Primary LP Air Pressurization Valve	ALP-V-5	Open, Bleed down and Close.	Control console		
5	Secondary LP Air Shutoff Valve	ALP-V-9	Shut.	Control console		
6	Primary LP Air Shutoff Valve	ALP-V-3	Shut.	Control console		
7	Primary HP Air Regulator	AHP-R-108	Back off fully.	Air reducing station		
8	Secondary HP Air Regulator	AHP-R-109	Back off fully.	Air reducing station		
9	Oxygen Flask Stop Valves		Shut.	Oxygen Bottles		
NOTE **If FADS III FMGS OSRA is supplying oxygen, proceed with steps 10–13; otherwise, skip to step 14.**						
10	BANK 3 Manifold Valve	OXHP-V-722	Shut.	OSRA		
11	BANK 2 Manifold Valve	OXHP-V-721	Shut.	OSRA		
12	Port B Bleed Valve	OXHP-V-740	Open, Bleed and Close.	OSRA		
13	Port A Bleed Valve	OXHP-V-741	Open, Bleed and Close.	OSRA		
14	Primary LP Oxygen Supply Valve	OLP-V-2	Shut.	Control console		
15	Secondary LP Oxygen Supply Valve	OLP-V-4	Shut.	Control console		
16	IL BIBS Oxygen Hull Stop Valve	OLP-V-6	Shut.	Under control console		
17	OL BIBS Oxygen Hull Stop Valve	OLP-V-8	Shut.	Under control console		
NOTE **If using bulk O_2, ensure all bottle valves are closed.**						
18	Primary HP Oxygen Regulator	OHP-R-206	Back off fully.	Oxygen reducing station		
19	Secondary HP Oxygen Regulator	OHP-R-205	Back off fully.	Oxygen reducing station		

Downloaded from http://www.everyspec.com

ITEM	COMPONENT	DESCRIPTION	PROCEDURE	LOCATION	CHECK	NOTE
20	IL Oxygen BIBS Masks		Bleed down.	Inside IL		
21	OL Oxygen BIBS Masks		Bleed down.	Inside OL		
NOTE **If FADS III FMGS HOSRA is supplying mixed gas, proceed with steps 22–25; otherwise, skip to step 26.**						
22	HP Supply Valve	HEOXHP-V-646	Shut	HOSRA		
23	Port C Bleed Valve	HEOXLP-V-642	Open, Bleed and Close.	HOSRA		
24	Port C Regulator	HEOXHP-V-647	Back off.	HOSRA		
25	Port C Valve	HEOXLP-V-644	Shut	HOSRA		
26	IL Fast Exhaust Valve	EXH-V-5	Shut.	Control console		
27	IL Slow Exhaust Valve	EXH-V-6	Shut.	Control console		
28	OL Fast Exhaust Valve	EXH-V-8	Shut.	Control console		
29	CO_2 Analyzer		Press and hold CO_2 button until it turns off.	Control console		
30	Oxygen Analyzer		Off.	Control console		
31	Chamber Communications		Off.	Control console		
32	IL Light Switch		Off.	Control console		
33	OL Light Switch		Off.	Control console		
34	IL Scrubber Switch		Off.	Control console		
35	ECS Switch		Off.	Control console		
36	ECS Switch		Off.	ECS unit		
37	IL Scrubber Canister		Remove from scrubber assemble and double bag.	Inside IL		
38	OL Door		Shut	Outside OL		
- END OF PROCEDURE -						

Downloaded from http://www.everyspec.com

THIS PAGE INTENTIONALLY LEFT BLANK

Downloaded from http://www.everyspec.com

STANDARD NAVY DOUBLE-LOCK RECOMPRESSION CHAMBER SYSTEM (SNDLRCS) OPERATING PROCEDURE

SNDLRCS OP-4

SNDLRCS MODIFIED STARTUP

Date: December 1, 2007

OP ASSIGNED TO: _____ DATE:_____

SPECIAL INSTRUCTIONS

(1) ENSURE THIS OP IS VALID BY CHECKING THE REVISION DATE ABOVE WITH THE CURRENT SNDLRCS O&M MANUAL.
(2) EACH STEP SHOULD BE CHECKED INDIVIDUALLY.
(3) REPORT ANY DISCREPANCY TO THE DIVING SUPERVISOR.

SNDLRCS OPERATOR: _____

DIVING SUPERVISOR: _____

Downloaded from http://www.everyspec.com

ITEM	COMPONENT	DESCRIPTION	PROCEDURE	LOCATION	CHECK	NOTE
NOTE **If the SNDLRCS is interfaced with the FADS III Air or FMGS, the Diving Supervisor shall ensure that FADS III Air or FMGS Modified Start Up is conducted concurrently with this OP.**						
1.	CO_2 Analyzer	Press CO_2 button. All lights will flash 4 times and buzzer will sound 4 beeps. Warm up takes 40 seconds. Yellow fault light will extinguish and green "ok" light will flash every 2 seconds. Perform cal check IAW User Manual.		Control console		
2.	Oxygen Analyzer		On.	Control console		
3.	IL Light Switch		On.	Control console		
4.	OL Light Switch		On.	Control console		
5.	Chamber Communications		On.	Control console		
6.	Port A	AHP-V-443	Open.	ASRA		
7.	Port C	AHP-V-422	Open.	ASRA		
8.	Secondary HP Air Regulator	AHP-R-109	Load to 250 psig.	Air reducing station		
9.	Secondary LP Air Supply Gauge	ALP-G-104	Record pressure: _____psig.	Air reducing station		
10.	Primary HP Air Regulator	AHP-R-108	Load to 250 psig.	Air reducing station		
11.	Primary LP Air Supply Gauge	ALP-G-101	Record pressure: _____psig.	Air reducing station		
NOTE **If FADS III FMGS OSRA is supplying oxygen, proceed with steps 12-15; otherwise, skip to step 16.**						
12.	Port B Bleed Valve	OXHP-V-740	Verify Shut	OSRA		
13.	Port A Bleed Valve	OXHP-V-741	Verify Shut	OSRA		
14.	BANK 3 Manifold Valve	OXHP-V-722	Open	OSRA		
15.	BANK 2 Manifold Valve	OXHP-V-721	Open	OSRA		
16.	Oxygen Flasks Stop Valves		Open. (Leave Shut if using OSRA)	Oxygen bottles		
NOTE **If using bulk O_2, ensure all bottle valves are open.**						

Downloaded from http://www.everyspec.com

ITEM	COMPONENT	DESCRIPTION	PROCEDURE	LOCATION	CHECK	NOTE
17.	Primary HP Oxygen Regulator	OHP-R-206	Load to 75 - 100 psig.	Oxygen reducing station		
18.	Primary LP Oxygen Supply Gauge	OLP-G-204	Record pressure: _____psig.	Oxygen reducing station		
19.	Secondary HP Oxygen Regulator	OHP-R-205	Load to 75 - 100 psig.	Oxygen reducing station		
20.	Secondary LP Oxygen Supply Gauge	OLP-G-203	Record pressure: _____psig.	Oxygen reducing station		
NOTE **If FADS III FMGS HOSRA is supplying mixed gas, proceed with steps 21–24; otherwise, skip to step 25.**						
21.	Port C Bleed Valve	HEOXLP-V-642	Verify Shut	HOSRA		
22.	HP Supply Valve	HEOXHP-V-646	Open	HOSRA		
23.	Port C Regulator	HEOXHP-V-647	Load 75 – 100 psig	HOSRA		
24.	Port C Valve	HEOXLP-V-644	Open	HOSRA		
25.	IL CO_2 Scrubber		Install CO_2 canister into scrubber assembly	Inside IL		
26.	IL BIBS Oxygen Hull Stop Valve	OLP-V-6	Open	Under control console		
27.	OL BIBS Oxygen Hull Stop Valve	OLP-V-8	Open	Under control console		
28.	Primary or Secondary LP O_2 Supply Valve	OLP-V-2 or OLP-V-4	Open OLP-V-2 or OLP-V-4 and Tag as Primary.	Control Console		
29.	Primary LP Air Shutoff Valve	ALP-V-3	Open	Control console		
30.	Perform communication check.					
31.	IL BIBS Masks		Breathe each mask to verify good supply.	IL		
32.	OL BIBS Masks		Breathe each mask to verify good supply.	OL		
33.	ECS		Turn on as required.	ECS unit		
34.	ECS		Turn on as required.	Control console		
35.	Complete chamber free dive check list.					
- END OF PROCEDURE-						

Downloaded from http://www.everyspec.com

THIS PAGE INTENTIONALLY LEFT BLANK

Downloaded from http://www.everyspec.com

STANDARD NAVY DOUBLE-LOCK RECOMPRESSION CHAMBER SYSTEM (SNDLRCS) OPERATING PROCEDURE

SNDLRCS OP-5

SNDLRCS SHUTDOWN FOR SHIPMENT/LAYUP

Date: December 1, 2007

OP ASSIGNED TO: _____ DATE:_____

SPECIAL INSTRUCTIONS

(1) ENSURE THIS OP IS VALID BY CHECKING THE REVISION DATE ABOVE WITH THE CURRENT SNDLRCS O&M MANUAL.
(2) EACH STEP SHOULD BE CHECKED INDIVIDUALLY.
(3) REPORT ANY DISCREPANCY TO THE DIVING SUPERVISOR.

SNDLRCS OPERATOR: _____

DIVING SUPERVISOR: _____

Downloaded from http://www.everyspec.com

ITEM	COMPONENT	DESCRIPTION	PROCEDURE	LOCATION	CHECK	NOTE
SHUT DOWN AIR SYSTEM						
1.	Flask Isolation Valves	AHP-V-401	Shut.	ASRA		
		AHP-V-402	Shut.	ASRA		
		AHP-V-403	Shut.	ASRA		
		AHP-V-404	Shut.	ASRA		
		AHP-V-405	Shut.	ASRA		
		AHP-V-406	Shut.	ASRA		
		AHP-V-407	Shut.	ASRA		
		AHP-V-408	Shut.	ASRA		
		AHP-V-409	Shut.	ASRA		
DANGER **Ports A, B, and C on the ASRA must be depressurized whenever a port hose is removed from port connector. Failure to depressurize the system may result in damage to equipment, or injury or death to personnel.**						
2.	Port C Bleed Valve	AHP-V-440	Open.	ASRA		
3.	Secondary HP Air Hose Assembly	H-436	Remove hose from secondary air supply fitting. Disconnect strain relief. Install port cap and tighten $^{3}/_{8}$ to ½ turn after O-ring engaged.	ASRA Port C		
4.	Port C Bleed Valve	AHP-V-440	Shut.	ASRA		
5.	Secondary HP Air Hose Assembly	H-436	Remove hose from secondary air supply fitting. Disconnect strain relief. Install port cap and tighten $^{3}/_{8}$ to ½ turn after O-ring engaged.	Outside of Bulkhead Transition Panel or Air Reducing Station		
6.	Port C Valve	AHP-V-422	Shut.	ASRA		
7.	BANK 2 Manifold Valve	AHP-V-421	Open.	ASRA		
8.	BANK 1 Manifold Valve	AHP-V-420	Open.	ASRA		
9.	Port A Bleed Valve	AHP-V-442	Open.	ASRA		
10.	Primary HP Air Hose Assembly		Remove hose from primary air supply fitting. Disconnect strain relief. Install port cap and tighten $^{3}/_{8}$ to ½ turn after O-ring engaged.	ASRA PORT A		
11.	Port A Bleed Valve	AHP-V-442	Shut.	ASRA		

Downloaded from http://www.everyspec.com

ITEM	COMPONENT	DESCRIPTION	PROCEDURE	LOCATION	CHECK	NOTE
12.	Primary HP Air Hose Assembly		Remove hose from primary air supply fitting. Disconnect strain relief. Install port cap and tighten $^{3}/_{8}$ to ½ turn after O-ring engaged.	Outside of Bulkhead Transition Panel or Air Reducing Station		
13.	BANK 1 Manifold Valve	AHP-V-420	Shut.	ASRA		
14.	BANK 2 Manifold Valve	AHP-V-421	Shut.	ASRA		
15.	Manifold Valve	AHP-V-444	Shut.	ASRA		
16.	Port A Valve	AHP-V-443	Shut.	ASRA		
17.	Primary and Secondary HP Air Hose Assemblies		Coil and stow primary and secondary HP air hoses.	ASRA		
SHUT DOWN OSRA						
NOTE **If interfaced with the OSRA, continue with step 18; if not, skip to step 30.**						
18.	Flask Isolation Valves	OXHP-V-704	Shut.	OSRA		
		OXHP-V-705	Shut.	OSRA		
		OXHP-V-706	Shut.	OSRA		
		OXHP-V-707	Shut.	OSRA		
		OXHP-V-708	Shut.	OSRA		
		OXHP-V-709	Shut.	OSRA		
19.	Port A Bleed Valve	OXHP-V-741	Open.	OSRA		
20.	Primary HP Oxygen Hose Assembly		Remove hose from primary oxygen supply fitting. Disconnect strain relief. Install port cap and tighten $^{3}/_{8}$ to ½ turn after O-ring engaged.	OSRA Port A		
21.	Port A Bleed Valve	OXHP-V-741	Close.	OSRA		
22.	Primary HP Oxygen Hose Assembly		Remove hose from primary oxygen supply fitting. Disconnect strain relief. Install port cap and tighten $^{3}/_{8}$ to ½ turn after O-ring engaged.	Outside of Bulkhead Transition Panel		
23.	Port B Bleed Valve	OXHP-V-740	Open.	OSRA		

Downloaded from http://www.everyspec.com

ITEM	COMPONENT	DESCRIPTION	PROCEDURE	LOCATION	CHECK	NOTE
24.	Secondary HP Oxygen Hose Assembly		Remove hose from secondary oxygen supply fitting. Disconnect strain relief. Install port cap and tighten $^{3}/_{8}$ to ½ turn after O-ring engaged.	OSRA Port B		
25.	Port B Bleed Valve	OXHP-V-740	Close.	OSRA		
26.	Secondary HP Oxygen Hose Assembly		Remove hose from secondary oxygen supply fitting. Disconnect strain relief. Install port cap and tighten $^{3}/_{8}$ to ½ turn after O-ring engaged.	Outside of Bulkhead Transition Panel		
27.	Primary and Secondary HP Oxygen Hose Assemblies		Coil and stow primary and secondary HP oxygen hoses.	OSRA		
28.	BANK 2 Manifold Valve	OXHP-V-721	Shut.	OSRA		
29.	BANK 3 Manifold Valve	OXHP-V-722	Shut.	OSRA		
SHUT DOWN HOSRA 50/50 CHAMBER						
NOTE **If interfaced with the HOSRA 50/50 Chamber, continue with step 30; if not, skip to step 39.**						
30.	Flask Isolation Valves	HEOXHP-V-604	Shut.	HOSRA		
		HEOXHP-V-605	Shut.	HOSRA		
		HEOXHP-V-606	Shut.	HOSRA		
		HEOXHP-V-607	Shut.	HOSRA		
31.	Port C Bleed Valve	HEOXLP-V-642	Open.	HOSRA		
32.	Helium-Oxygen HP Hose Assembly		Remove hose from secondary oxygen supply fitting. Disconnect strain relief. Install port cap and tighten $^{3}/_{8}$ to ½ turn after O-ring engaged.	HOSRA Port C		
33.	Port C Bleed Valve	HEOXLP-V-642	Close.	HOSRA		
34.	Helium-Oxygen HP Hose Assembly		Remove hose from secondary oxygen supply fitting. Disconnect strain relief. Install port cap and tighten $^{3}/_{8}$ to ½ turn after O-ring engaged.	Outside of Bulkhead Transition Panel		
35.	HP Mixed Gas Hose Assembly		Coil and stow HP mixed gas hose.	HOSRA		
36.	Port C Valve	HEOXLP-V-644	Shut.	HOSRA		
37.	Port C Regulator	HEOXHP-V-647	Back off fully.	HOSRA		

Downloaded from http://www.everyspec.com

ITEM	COMPONENT	DESCRIPTION	PROCEDURE	LOCATION	CHECK	NOTE
38.	HP Supply Valve	HEOXHP-V-646	Shut.	HOSRA		
SHUT DOWN AIR REDUCING STATION						
39.	Secondary LP Air Shutoff Valve	ALP-V-9	Open	Control console		
40.	IL Primary LP Air Pressurization Valve	ALP-V-5	Open, Bleed and Shut (as read on ALP-G-1 and ALP-G-2)	Control console		
41.	Secondary LP Air Shutoff Valve	ALP-V-9	Shut	Control console		
42.	Primary HP Air Supply Valve	AHP-V-101	Shut.	Air reducing station		
43.	Primary HP Air Regulator	AHP-R-108	Back off fully.	Air reducing station		
44.	Secondary HP Air Supply Valve	AHP-V-102	Shut.	Air reducing station		
45.	Secondary HP Air Regulator	AHP-R-109	Back off fully.	Air reducing station		

WARNING

When using SNDLRCS van oxygen bottles, remove caps for Primary and Secondary Oxygen on the outside of the Bulkhead Transition Panel to provide a vent path outside the van before bleeding down oxygen pressure. Failure to vent the system outside the van would cause a release of oxygen into the space, causing a fire hazard. If not using these oxygen bottles, proceed with step 50 below.

46.	Primary and Secondary Oxygen Bottles Shutoff Valves		Shut.	Oxygen bottles		
SHUT DOWN OXYGEN REDUCING STATION						
47.	Primary HP Oxygen External Supply Shutoff Valve	OHP-V-201	Open slowly bleed down/ Shut.	Oxygen reducing station		
48.	Secondary HP Oxygen External Supply Shutoff Valve	OHP-V-203	Open slowly bleed down/ Shut.	Oxygen reducing station		

Downloaded from http://www.everyspec.com

ITEM	COMPONENT	DESCRIPTION	PROCEDURE	LOCATION	CHECK	NOTE
49.	Primary and Secondary Caps		Install caps	Outside Bulkhead Transition Panel		
50.	Primary HP Oxygen Regulator	OHP-R-206	Back off fully.	Oxygen reducing station		
51.	Secondary HP Oxygen Regulator	OHP-R-205	Back off fully.	Oxygen reducing station		
52.	BIBS Masks		Breathe down.	BIBS mask		
53.	Oxygen LP Gauge	OLP-G-1	Verify reads zero	Control console		
SHUT DOWN CHAMBER						
54.	Medical Lock Pressure Gauge Isolation Valve	EQ-V-3	Verify Open.	Medical lock		
55.	Medical Lock Inner And Outer Doors		Shut.	Medical lock		
56.	IL Fast Exhaust Valve	EXH-V-5	Shut	Control console		
57.	OL Fast Exhaust Valve	EXH-V-8	Shut	Control console		
58.	Primary LP Air Shutoff Valve	ALP-V-3	Shut.	Control console		
59.	Secondary LP Air Shutoff Valve	ALP-V-9	Shut.	Control console		
60.	Secondary LP Air Cross Connect Valve	ALP-V-10	Shut.	Control console		
61.	Primary LP Air Cross Connect Valve	ALP-V-4	Shut.	Control console		
62.	LP Mixed Gas Shutoff Valve	MLP-V-2	Shut.	Control console		
63.	LP Mixed Gas Hull Stop Valve	MLP-V-4	Shut.	Under control console		
64.	Primary LP Oxygen Supply Valve	OLP-V-2	Shut.	Control console		

Downloaded from http://www.everyspec.com

ITEM	COMPONENT	DESCRIPTION	PROCEDURE	LOCATION	CHECK	NOTE
65.	Secondary LP Oxygen Supply Valve	OLP-V-4	Shut.	Control console		
66.	IL BIBS Oxygen Hull Stop Valve	OLP-V-6	Shut.	Under control console		
67.	OL BIBS Oxygen Hull Stop Valve	OLP-V-8	Shut.	Under control console		
68.	ECS Hot or Cold Water Supply Valve	ECS-V-1	Shut.	End of chamber		
69.	ECS Hot or Cold Water Return Valve	ECS-V-2	Shut.	End of chamber		
SHUT DOWN OXYGEN AND CO_2 ANALYZERS, CO_2 SCRUBBER AND ENVIRONMENTAL CONTROL SYSTEM.						
70.	Oxygen Analyzer		Off.	Control console		
71.	CO_2 Analyzer	Press and hold CO_2 button. Release after display turns off. If unit fails to turn off within 4 seconds, place unit into charger. After 10 seconds, repeat procedure		Control console		
72.	CO_2 Scrubber Switch		Off.	Control console		
73.	ECS		Off.	ECS unit and control console		
74.	Remove CO_2 scrubber canister, dump absorbent, clean and stow canister.					
SHUT DOWN SNDLRCS ELECTRICAL SYSTEM						
75.	Chamber Communications		Verify Off.	Control console		
76.	IL Light		Off.	Control console		
77.	OL Light		Off.	Control console		
78.	Van AC/Heater Unit(s)		Off.	AC/Heater unit		
79.	Main Breaker and All Circuit Breakers		Off.	120/240 Load Distribution Panel		
80.	Manual Bus Transfer Switch		Off	Manual Bus Transfer Switch Panel		
81.	Disconnect SNDLRCS van from primary power source.					
82.	Turn off SNDLRCS van O_2 monitor.					
83.	Remove exhaust elbow/screen assembly and install cap.					
84.	Install AC drain plugs, then close AC and ECS access covers.					
85.	Install Chamber Outer Door Access Cover.					

Downloaded from http://www.everyspec.com

ITEM	COMPONENT	DESCRIPTION	PROCEDURE	LOCATION	CHECK	NOTE
- END OF PROCEDURE -						

Downloaded from http://www.everyspec.com

STANDARD NAVY DOUBLE-LOCK
RECOMPRESSION CHAMBER SYSTEM (SNDLRCS)
OPERATING PROCEDURE

SNDLRCS OP-6

AIR SUPPLY RACK ASSEMBLY (ASRA) CHARGING PROCEDURES

Date: December 1, 2007

OP ASSIGNED TO: _____ DATE:_____

SPECIAL INSTRUCTIONS

(1) ENSURE THIS OP IS VALID BY CHECKING THE REVISION DATE ABOVE WITH THE CURRENT SNDLRCS O&M MANUAL.
(2) EACH STEP SHOULD BE CHECKED INDIVIDUALLY.
(3) REPORT ANY DISCREPANCY TO THE DIVING SUPERVISOR.

SNDLRCS OPERATOR: _____

DIVING SUPERVISOR: _____

Downloaded from http://www.everyspec.com

ITEM	COMPONENT	DESCRIPTION	PROCEDURE	LOCATION	CHECK	NOTE
DANGER **Failure to connect hose assembly strain relief can cause personnel injury or death if the hose separates or bursts**						
WARNINGS **Charge the ASRA only with an Approved for Navy Use (ANU) compressor with a moisture separator, filtration system, and a current air sample. Failure to use an approved air source may result in contamination of the air supply, causing equipment damage, personnel injury, or death.** **Fittings must be properly tightened and O-rings must be properly seated when connecting hoses. Excessive tightening can damage threads. Fittings and O-rings that are not properly installed can allow high-pressure gas to escape and can result in injury.**						
1	HP Air Hose Assembly		Remove port cap from charge port – HP port and check for damaged threads. Remove plug from hose and check hose fitting for O-ring and damaged threads. Connect hose and tighten $^{3}/_{8}$ to ½ turn after O-ring has engaged. Connect strain relief.	ASRA		
2	HP Air Hose Assembly		Remove port cap from compressor charge and check for damaged threads. Remove plug from hose and check hose fitting for O-ring and damaged threads. Connect hose and tighten $^{3}/_{8}$ to ½ turn after O-ring has engaged. Connect strain relief.	Compressor		
3	BANK 2 Manifold Valve	AHP-V-421	Verify closed.	ASRA		
4	BANK 1 Manifold Valve	AHP-V-420	Verify closed.	ASRA		
5	Port C Valve	AHP-V-422	Verify closed.	ASRA		
6	Charge Regulator	AHP-V-432	Verify backed off fully.	ASRA		
7	Start and run compressor at normal operating condition in accordance with the appropriate technical manual.					
8	Check HP air hose assembly for leaks.					
NOTE **All banks can be charged together or separately.** **Proceed to step 9 to charge bank 1.** **Proceed to step 15 to charge bank 2.** **Proceed to step 21 to charge bank 3.**						
CHARGE BANK 1						
9	Gauge Stop Valve	AHP-V-426	Open.	ASRA		

Downloaded from http://www.everyspec.com

ITEM	COMPONENT	DESCRIPTION	PROCEDURE	LOCATION	CHECK	NOTE
10	Flask Isolation Valves	AHP-V-401	Open.	ASRA		
		AHP-V-402	Open.	ASRA		
		AHP-V-403	Open.	ASRA		
11	BANK 1 Charge Valve	AHP-V-423	Open.	ASRA		
12	Flasks		Charge to 5,000 psig.	ASRA		
13	Flask Isolation Valves	AHP-V-401	Close.	ASRA		
		AHP-V-402	Close.	ASRA		
		AHP-V-403	Close.	ASRA		
14	BANK 1 Charge Valve	AHP-V-423	Close.	ASRA		
NOTE **Proceed to step 15 to charge bank 2.** **Proceed to step 21 to charge bank 3.** **Proceed to step 27 to discontinue charging.**						
CHARGE BANK 2						
15	Gauge Stop Valve	AHP-V-427	Open.	ASRA		
16	Flask Isolation Valves	AHP-V-404	Open.	ASRA		
		AHP-V-405	Open.	ASRA		
		AHP-V-406	Open.	ASRA		
		AHP-V-407	Open.	ASRA		
17	BANK 2 Charge Valve	AHP-V-424	Open.	ASRA		
18	Flasks		Charge to 5,000 psig.	ASRA		
19	Flask Isolation Valves	AHP-V-404	Close.	ASRA		
		AHP-V-405	Close.	ASRA		
		AHP-V-406	Close.	ASRA		
		AHP-V-407	Close.	ASRA		
20	BANK 2 Charge Valve	AHP-V-424	Close.	ASRA		
NOTE **Proceed to step 21 to charge bank 3.** **Proceed to step 27 to discontinue charging.**						
CHARGE BANK 3						
21	Gauge Stop Valve	AHP-V-428	Open.	ASRA		
22	Flask Isolation Valves	AHP-V-408	Open.	ASRA		
		AHP-V-409	Open.	ASRA		

Downloaded from http://www.everyspec.com

ITEM	COMPONENT	DESCRIPTION	PROCEDURE	LOCATION	CHECK	NOTE
23	BANK 3 Charge Valve	AHP-V-425	Open.	ASRA		
24	Flasks		Charge to 5,000 psig.	ASRA		
25	Flask Isolation Valves	AHP-V-408	Close.	ASRA		
		AHP-V-409	Close.	ASRA		
26	BANK 3 Charge Valve	AHP-V-425	Close.	ASRA		
DISCONTINUE CHARGING						
27	Compressor		Shut down in accordance with compressor operations manual.			
WARNING **Prior to bleeding HP air, clear all personnel from the area to avoid injury from flying debris. Operators must wear protective eyewear. Flying debris can cause personnel injury.**						
28	System Outlet Bleed Valve		Bleed HP air hose assembly.	Compressor		
29	HP Air Hose Assembly		Remove hose from charge port – HP port. Disconnect strain relief. Install port cap and tighten $^{3}/_{8}$ to ½ turn after O-ring has engaged.	ASRA		
30	HP Air Hose Assembly		Remove hose from compressor charge port. Disconnect strain relief. Install port cap and tighten $^{3}/_{8}$ to ½ turn after O-ring has engaged.	Compressor		
BLEED PRESSURE IN BANKS 1 AND 2						
31	BANK 1 Manifold Valve	AHP-V-420	Open.	ASRA		
32	Port A Valve	AHP-V-443	Open.	ASRA		
33	Port A Bleed Valve	AHP-V-442	Open, bleed, and close.	ASRA		
34	Port A Valve	AHP-V-443	Close.	ASRA		
35	BANK 1 Manifold Valve	AHP-V-420	Close.	ASRA		
36	BANK 2 Manifold Valve	AHP-V-421	Open.	ASRA		
37	Port B Valve	AHP-V-429	Open.	ASRA		
38	Port B Bleed Valve	AHP-V-441	Open, bleed, and close.	ASRA		
39	Port B Valve	AHP-V-429	Close.	ASRA		

Downloaded from http://www.everyspec.com

ITEM	COMPONENT	DESCRIPTION	PROCEDURE	LOCATION	CHECK	NOTE
40	BANK 2 Manifold Valve	AHP-V-421	Close.	ASRA		
BLEED PRESSURE IN BANK 3						
41	Port C Valve	AHP-V-422	Open.	ASRA		
42	Port C Bleed Valve	AHP-V-440	Open, bleed, and close.	ASRA		
43	Port C Valve	AHP-V-422	Close.	ASRA		
COMPLETE SHUTDOWN AND DRAIN CONDENSATE						
44	Gauge Stop Valves	AHP-V-426	Close.	ASRA		
		AHP-V-427	Close.	ASRA		
		AHP-V-428	Close.	ASRA		
45	System Drain Valve	AHP-V-419	Open.	ASRA		
46	Flask Drain Valves	AHP-V-410	Open, drain, and close.	ASRA		
		AHP-V-411	Open, drain, and close.	ASRA		
		AHP-V-412	Open, drain, and close.	ASRA		
		AHP-V-413	Open, drain, and close.	ASRA		
		AHP-V-414	Open, drain, and close.	ASRA		
		AHP-V-415	Open, drain, and close.	ASRA		
		AHP-V-416	Open, drain, and close.	ASRA		
		AHP-V-417	Open, drain, and close.	ASRA		
		AHP-V-418	Open, drain, and close.	ASRA		
47	System Drain Valve	AHP-V-419	Close.	ASRA		
- END OF PROCEDURE -						

Downloaded from http://www.everyspec.com

THIS PAGE INTENTIONALLY LEFT BLANK

Downloaded from http://www.everyspec.com

STANDARD NAVY DOUBLE-LOCK
RECOMPRESSION CHAMBER SYSTEM (SNDLRCS)
OPERATING PROCEDURE

SNDLRCS OP-7

PROCEDURES FOR CHARGING AIR SUPPLY RACK ASSEMBLY (ASRA) DURING OPERATION

Date: December 1, 2007

OP ASSIGNED TO: _____ DATE:_____

SPECIAL INSTRUCTIONS

(1) ENSURE THIS OP IS VALID BY CHECKING THE REVISION DATE ABOVE WITH THE CURRENT SNDLRCS O&M MANUAL.
(2) EACH STEP SHOULD BE CHECKED INDIVIDUALLY.
(3) REPORT ANY DISCREPANCY TO THE DIVING SUPERVISOR.

SNDLRCS OPERATOR: _____

DIVING SUPERVISOR: _____

Downloaded from http://www.everyspec.com

ITEM	COMPONENT	DESCRIPTION	PROCEDURE	LOCATION	CHECK	NOTE
DANGERS **Failure to connect hose assembly strain relief can cause personnel injury or death if the hose separates or bursts** **Bank being charged must not simultaneously be providing air to the system. Failure of a compressor during charging can contaminate the air bank, and, if used to provide air supply to other components, can result in injury or death.**						
WARNINGS **Charge the ASRA only with an Approved for Navy Use (ANU) compressor with a moisture separator, filtration system, and a current air sample. Failure to use an approved air source may result in contamination of the air supply, causing equipment damage, personnel injury, or death.** **Fittings must be properly tightened and O-rings must be properly seated when connecting hoses. Excessive tightening can damage threads. Fittings and O-rings that are not properly installed can allow high-pressure gas to escape and can result in injury.**						
1	HP Air Hose Assembly	H-436	Remove port cap from charge port – HP port and check for damaged threads. Remove plug from hose and check hose fitting for O-ring and damaged threads. Connect hose and tighten $^{3}/_{8}$ to ½ turn after O-ring has engaged. Connect strain relief.	ASRA		
2	HP Air Hose Assembly	H-436	Remove port cap from compressor charge and check for damaged threads. Remove plug from hose and check hose fitting for O-ring and damaged threads. Connect hose and tighten $^{3}/_{8}$ to ½ turn after O-ring has engaged. Connect strain relief.	Compressor		
3	Start and run compressor at normal operating condition in accordance with the appropriate technical manual.					
4	Check HP air hose assembly for leaks.					
NOTE **Proceed to step 5 to charge BANK 1.** **Proceed to step 15 to charge BANK 2.**						
CHARGE BANK 1 WHILE BANK 2 IS IN USE						
5	BANK 1 Manifold Valve	AHP-V-420	Close.	ASRA		
6	BANK 2 Manifold Valve	AHP-V-421	Verify open.	ASRA		
7	Gauge Stop Valve	AHP-V-426	Verify open.	ASRA		
8	Flask Isolation Valves	AHP-V-401	Verify open.	ASRA		
		AHP-V-402	Verify open.	ASRA		
		AHP-V-403	Verify open.	ASRA		

Downloaded from http://www.everyspec.com

ITEM	COMPONENT	DESCRIPTION	PROCEDURE	LOCATION	CHECK	NOTE
9	BANK 2 and 3 Charge Valve	AHP-V-424	Verify shut.	ASRA		
		AHP-V-425	Verify shut.	ASRA		
10	BANK 1 Charge Valve	AHP-V-423	Open.	ASRA		
11	Flasks		Charge to 5,000 psig.	ASRA		
12	BANK 1 Charge Valve	AHP-V-423	Close.	ASRA		
NOTE **Upon completion of charging BANK 1 and if BANK 2 is going to be charged, steps 13 and 14 can be omitted.**						
13	Compressor		Shut down in accordance with compressor operations manual.			
WARNING **Prior to bleeding HP air, clear all personnel from the area to avoid injury from flying debris. Operators must wear protective eyewear. Flying debris can cause personnel injury.**						
14	System Outlet Bleed Valve		Bleed HP air hose assembly.	Compressor		
NOTE **Go to step 15 if BANK 2 is to be charged..**						
CHARGE BANK 2 WHILE BANK 1 IS IN USE						
15	BANK 2 Manifold Valve	AHP-V-421	Close.	ASRA		
16	BANK 1 Manifold Valve	AHP-V-420	Open.	ASRA		
17	Gauge Stop Valve	AHP-V-427	Verify open.	ASRA		
18	Flask Isolation Valves	AHP-V-404	Verify open.	ASRA		
		AHP-V-405	Verify open.	ASRA		
		AHP-V-406	Verify open.	ASRA		
		AHP-V-407	Verify open.	ASRA		
19	BANK 1 and 3 Charge Valves	AHP-V-423	Verify shut.	ASRA		
		AHP-V-425	Verify shut.	ASRA		
20	BANK 2 Charge Valve	AHP-V-424	Open.	ASRA		
21	Flasks		Charge to 5,000 psig.	ASRA		
22	BANK 2 Charge Valve	AHP-V-424	Close.	ASRA		

Downloaded from http://www.everyspec.com

ITEM	COMPONENT	DESCRIPTION	PROCEDURE	LOCATION	CHECK	NOTE
NOTE **Proceed to step 5 to charge BANK 1.**						
23	Compressor		Shut down in accordance with compressor operations manual.			
WARNING **Prior to bleeding HP air, clear all personnel from the area to avoid injury from flying debris. Operators must wear protective eyewear. Flying debris can cause personnel injury.**						
24	System Outlet Bleed Valve		Bleed HP air hose assembly.	Compressor		
NOTE **Go to step 25 to disconnect ASRA from compressor. Otherwise, charge hose can remain connected for future charging.**						
25	HP Air Hose Assembly	H-436	Remove hose from charge port – hp port. Disconnect strain relief. Install port cap and tighten $^{3}/_{8}$ to ½ turn after O-ring has engaged. Replace plug in hose end.	ASRA		
26	HP Air Hose Assembly	H-436	Remove hose from compressor charge port. Disconnect strain relief. Install port cap and tighten $^{3}/_{8}$ to ½ turn after O-ring has engaged. Replace plug in hose end.	Compressor		
- END OF PROCEDURE -						

Downloaded from http://www.everyspec.com

STANDARD NAVY DOUBLE-LOCK RECOMPRESSION CHAMBER SYSTEM (SNDLRCS) OPERATING PROCEDURE

SNDLRCS OP-8

SCUBA BOTTLE CHARGING PROCEDURES

Date: December 1, 2007

OP ASSIGNED TO: _____ DATE:_____

SPECIAL INSTRUCTIONS

(1) ENSURE THIS OP IS VALID BY CHECKING THE REVISION DATE ABOVE WITH THE CURRENT SNDLRCS O&M MANUAL.
(2) EACH STEP SHOULD BE CHECKED INDIVIDUALLY.
(3) REPORT ANY DISCREPANCY TO THE DIVING SUPERVISOR.

SNDLRCS OPERATOR: _____

DIVING SUPERVISOR: _____

Downloaded from http://www.everyspec.com

ITEM	COMPONENT	DESCRIPTION	PROCEDURE	LOCATION	CHECK	NOTE
NOTE **Flasks from BANK 1 and 2 can be used to charge scuba bottles.** **Circle BANK that will provide air for charging scuba bottle(s): 1 2** **If 1 is selected, perform steps 1 – 4 and then continue to step 10.** **If 2 is selected, perform steps 5 – 9 and then continue to step 10.**						
SETTING UP BANK 1 TO SUPPLY SCUBA CHARGE						
1	Gauge Stop Valve	AHP-V-426	Open.	ASRA		
2	Flask Isolation Valves Circle valves that are opened.	AHP-V-401	Open slowly.	ASRA		
		AHP-V-402	Open slowly.	ASRA		
		AHP-V-403	Open slowly.	ASRA		
3	BANK 1 Gauge	AHP-G-437	Record pressure: _____ psig.	ASRA		
4	BANK 1 Manifold Valve	AHP-V-420	Open.	ASRA		
SETTING UP BANK 2 TO SUPPLY SCUBA CHARGE						
5	Gauge Stop Valve	AHP-V-427	Open.	ASRA		
6	Flask Isolation Valves Circle valves that are opened	AHP-V-404	Open slowly.	ASRA		
		AHP-V-405	Open slowly.	ASRA		
		AHP-V-406	Open slowly.	ASRA		
		AHP-V-407	Open slowly.	ASRA		
7	BANK 2 Gauge	AHP-G-438	Record pressure: _____ psig.	ASRA		
8	BANK 2 Manifold Valve	AHP-V-421	Open.	ASRA		
9	Manifold Valve	AHP-V-444	Open.	ASRA		
SETTING UP CHARGE REGULATOR						
10	Gauge Stop Valve	AHP-V-435	Open.	ASRA		
11	Scuba Supply Valve	AHP-V-431	Open slowly.	ASRA		
12	Scuba Regulator	AHP-V-432	Slowly adjust until scuba pressure (AHP-G-436) gauge reads 3,000 psig.	ASRA		
13	Scuba Charge Hose Assembly	H-406	Verify bleeder screw is closed. Remove from yoke bracket.	ASRA		
14	Scuba Charge Hose Assembly	H-406	Attach yoke to scuba bottle. Attach strain relief cable with single loop around bottle.	ASRA		

Downloaded from http://www.everyspec.com

ITEM	COMPONENT	DESCRIPTION	PROCEDURE	LOCATION	CHECK	NOTE
15	Scuba Bottle Valve		Open.			
16	Scuba Outlet Valve	AHP-V-434	Open slowly. Allow air to cascade into scuba bottle until filled. Close valve.	ASRA		
17	Scuba Bottle Valve		Close.			
18	Scuba Charge Hose Assembly	H-406	Open bleeder screw, depressurize hose, and close bleeder screw.	ASRA		
19	Repeat steps 14 – 18 for each additional scuba bottle that needs to be charged.					
20	Scuba Charge Hose Assembly	H-406	Attach yoke to yoke bracket.	ASRA		
21	Flask Isolation Valves Close valves that are open.	AHP-V-401	Close if open.	ASRA		
		AHP-V-402	Close if open.	ASRA		
		AHP-V-403	Close if open.	ASRA		
		AHP-V-404	Close if open.	ASRA		
		AHP-V-405	Close if open.	ASRA		
		AHP-V-406	Close if open.	ASRA		
		AHP-V-407	Close if open.	ASRA		
22	PORT A Valve	AHP-V-443	Open.	ASRA		
23	PORT A Bleed Valve	AHP-V-442	Open, depressurize, and close.	ASRA		
24	Port A Valve	AHP-V-443	Close.	ASRA		
25	Bank 1 Manifold Valve	AHP-V-420	Close if open.	ASRA		
26	Bank 2 Manifold Valve	AHP-V-421	Close if open.	ASRA		
27	Scuba Supply Valve	AHP-V-431	Close.	ASRA		
28	Scuba Regulator	AHP-V-432	Back off fully.	ASRA		
29	Manifold Valve	AHP-V-444	Close if open.	ASRA		
30	Gauge Stop Valve	AHP-V-426	Close.	ASRA		
31	Gauge Stop Valve	AHP-V-427	Close.	ASRA		
32	Gauge Stop Valve	AHP-V-435	Close.	ASRA		
- END OF PROCEDURE -						

Downloaded from http://www.everyspec.com

THIS PAGE INTENTIONALLY LEFT BLANK

Downloaded from http://www.everyspec.com

STANDARD NAVY DOUBLE-LOCK RECOMPRESSION CHAMBER SYSTEM (SNDLRCS) OPERATING PROCEDURE

SNDLRCS OP-9

OXYGEN BOTTLE IN-PLACE CHARGING PROCEDURES

Date: December 1, 2007

OP ASSIGNED TO: _____ DATE:_____

SPECIAL INSTRUCTIONS

(1) ENSURE THIS OP IS VALID BY CHECKING THE REVISION DATE ABOVE WITH THE CURRENT SNDLRCS O&M MANUAL.
(2) EACH STEP SHOULD BE CHECKED INDIVIDUALLY.
(3) REPORT ANY DISCREPANCY TO THE DIVING SUPERVISOR.

SNDLRCS OPERATOR: _____

DIVING SUPERVISOR: _____

Downloaded from http://www.everyspec.com

ITEM	COMPONENT	DESCRIPTION	PROCEDURE	LOCATION	CHECK	NOTE

DANGERS

Charging hoses must meet cleaning requirements of MIL-STD 1330. Contaminated hoses can result in explosion, fire, and/or personnel injury or death.

Failure to connect hose assembly strain relief can cause personnel injury or death if the hose separates or bursts

WARNINGS

Oxygen used to charge bottles must meet specifications of the *U.S. Navy Diving Manual*. Failure to use an approved oxygen source may result in contamination of the oxygen supply, causing equipment damage, personnel injury, or death.

Charge SNDLRCS Oxygen Bottles only with an Approved for Navy Use (ANU) or certified booster assembly or transfer pump cleaned for oxygen service. Failure to use an approved oxygen source may result in contamination of the oxygen supply, causing equipment damage, personnel injury, or death.

Do not exceed a charging rate of 70 psi per minute to prevent heat buildup in the piping system. Rapid pressurization can result in an explosion hazard.

T-size bottles, originally furnished with the SNDLRCS, shall not be charged higher than 2400 psig. If K-size bottles are installed, the maximum allowable pressure shall not exceed 1800 psig. The operator must verify which size and pressure rating for the bottles are in place before charging to prevent failure of the cylinder or its rupture disc. This would cause a release of oxygen into the space, causing a fire hazard.

Fittings must be properly tightened and O-rings must be properly seated when connecting hoses. Excessive tightening can damage threads. Fittings and O-rings that are not properly installed can allow high-pressure gas to escape and can result in injury.

NOTE

This OP is to be conducted after completion of OP-5.

1.	HP Oxygen Hose Assembly		Remove port cap from Primary Oxygen connection and check for damaged threads. Remove plug from hose and check hose fitting for O-ring and damaged threads. Connect hose and tighten $^{3}/_{8}$ to ½ turn after O-ring has engaged. Connect strain relief.	Outside Bulkhead Transition Panel		
2.	HP Oxygen Hose Assembly		Remove port cap from compressor charge and check for damaged threads. Remove plug from hose and check hose fitting for O-ring and damaged threads. Connect hose and tighten $^{3}/_{8}$ to ½ turn after O-ring has engaged. Connect strain relief.	Booster or Transfer Pump		
3.	Start and run booster/transfer pump at normal operating condition in accordance with the appropriate technical manual.					
4.	Primary Oxygen Bottle Shutoff Valve		Open.	Oxygen Bottles		

Downloaded from http://www.everyspec.com

ITEM	COMPONENT	DESCRIPTION	PROCEDURE	LOCATION	CHECK	NOTE
5.	Primary HP Oxygen External Supply Shutoff Valve	OHP-V-201	Slowly open. Do not exceed 70 psig per minute. Maximum pressure for T-bottle is 2,400 psig. Maximum pressure for K-bottle is 1,800 psig.	Oxygen Reducing Station		
6.	Primary HP Oxygen External Supply Shutoff Valve	OHP-V-201	Shut	Oxygen Reducing Station		
7.	Primary Oxygen Bottle Shutoff		Shut	Oxygen Bottles		
8.	Secure booster/transfer pump and bleed down pressure from charging hose in accordance with the appropriate technical manual.					
9.	HP Oxygen Hose Assembly		Disconnect strain relief. Disconnect hose from Primary Oxygen connection and install port cap.	Outside Bulkhead Transition Panel		
10.	HP Oxygen Hose Assembly		Remove port cap from Secondary Oxygen connection and check for damaged threads. Remove plug from hose and check hose fitting for O-ring and damaged threads. Connect hose and tighten $^{3}/_{8}$ to ½ turn after O-ring has engaged. Connect strain relief.	Outside Bulkhead Transition Panel		
11.	Start and run booster/transfer pump at normal operating condition in accordance with the appropriate technical manual.					
12.	Secondary Oxygen Bottle Shutoff Valve		Open.	Oxygen Bottles		
13.	Secondary HP Oxygen External Supply Shutoff Valve	OHP-V-203	Slowly open. Do not exceed 70 psig per minute. Maximum pressure for T-bottle is 2,400 psig. Maximum pressure for K-bottle is 1,800 psig.	Oxygen Reducing Station		
14.	Secondary HP Oxygen External Supply Shutoff Valve	OHP-V-203	Shut	Oxygen Reducing Station		
15.	Secondary Oxygen Bottle Shutoff		Shut	Oxygen Bottles		
16.	Secure booster/transfer pump and bleed down pressure from charging hose in accordance with the appropriate technical manual.					
17.	HP Oxygen Hose Assembly		Remove hose from Secondary Oxygen connection port. Disconnect strain relief. Install port cap and tighten $^{3}/_{8}$ to ½ turn after O-ring has engaged.	Outside Bulkhead Transition Panel		
18.	HP Air Hose Assembly		Remove hose from compressor charge port. Disconnect strain relief. Install port cap and tighten $^{3}/_{8}$ to ½ turn after O-ring has engaged.	Booster or Transfer Pump		
- END OF PROCEDURE -						

Downloaded from http://www.everyspec.com

THIS PAGE INTENTIONALLY LEFT BLANK

Downloaded from http://www.everyspec.com

APPENDIX B

STANDARD NAVY DOUBLE-LOCK RECOMPRESSION CHAMBER SYSTEM (SNDLRCS) EMERGENCY PROCEDURES

EMERGENCY PROCEDURES LIST

SNDLRCS EP-1	RAPID LOSS OF CHAMBER PRESSURE
SNDLRCS EP-2	INCREASE IN CHAMBER PRESSURE
SNDLRCS EP-3	CONTAMINATED ATMOSPHERE
SNDLRCS EP-4	FIRE IN CHAMBER
SNDLRCS EP-5	LOSS OF OXYGEN
SNDLRCS EP-6	LOSS OF PRIMARY AIR SUPPLY
SNDLRCS EP-7	LOSS OF PRIMARY POWER

Downloaded from http://www.everyspec.com

THIS PAGE INTENTIONALLY LEFT BLANK

Downloaded from http://www.everyspec.com

STANDARD NAVY DOUBLE-LOCK RECOMPRESSION CHAMBER SYSTEM (SNDLRCS) EMERGENCY PROCEDURE

SNDLRCS EP-1

RAPID LOSS OF CHAMBER PRESSURE

Date: December 1, 2007

OP ASSIGNED TO: _____ DATE:_____

SPECIAL INSTRUCTIONS

(1) ENSURE THIS OP IS VALID BY CHECKING THE REVISION DATE ABOVE WITH THE CURRENT SNDLRCS O&M MANUAL.
(2) EACH STEP SHOULD BE CHECKED INDIVIDUALLY.
(3) REPORT ANY DISCREPANCY TO THE DIVING SUPERVISOR.

SNDLRCS OPERATOR: _____

DIVING SUPERVISOR: _____

Downloaded from http://www.everyspec.com

ITEM	COMPONENT	DESCRIPTION	PROCEDURE	LOCATION	CHECK	NOTE
INNER LOCK (IL) PRESSURIZED						
1	Pressurization control valve	ALP-V-5	Chamber operator adds gas to maintain and regain original depth.	Control console		
2	IL Fast and Slow exhaust valves	EXH-V-5 EXH-V-6	Shut.	Control console		
3	IL exhaust hull stop valve	EXH-V-7	Shut.	Under control console		
NOTE **Shut relief isolation valve only if relief valve has lifted or is leaking by.**						
4	IL pressure relief hull stop valve	ATM-V-9	Shut.	On hull opposite control console		Note 1
5	BIBS mask		Divers off BIBS.			
6	IL BIBS exhaust hull stop valve	EXH-V-2	Shut.	On hull opposite control console		
7	Chamber depth gauges	PN-G-1 PN-G-2	Check for leaking.	Control console		
8	Chamber depth gauges isolation valves	ATM-V-1 ATM-V-3	Shut if related gauge is leaking.	Control console		
9	Door gaskets and pipe systems		Check for leaks. Isolate and repair leaks as required.	Chamber		
10	Medical lock pressurization hull stop	EQ-V-2	Check shut.	Left side medical lock		
ADDITIONAL STEPS IF OUTER LOCK (OL) IS PRESSURIZED						
11	OL BIBS exhaust hull stop valve	EXH-V-4	Shut.	Under control console		
12	OL exhaust valve	EXH-V-8	Check shut.	Control console		
13	OL exhaust hull stop valve	EXH-V-9	Shut.	Under control console		
14	OL door equalization stop valve	EQ-V-4	Check shut.	Outside OL door		
15	OL door equalization stop valve	EQ-V-5	Instruct tender to check/shut.	Inside OL door		
- END OF PROCEDURE -						

Downloaded from http://www.everyspec.com

STANDARD NAVY DOUBLE-LOCK RECOMPRESSION CHAMBER SYSTEM (SNDLRCS) EMERGENCY PROCEDURE

SNDLRCS EP-2

INCREASE IN CHAMBER PRESSURE

Date: December 1, 2007

OP ASSIGNED TO: _____ DATE:_____

SPECIAL INSTRUCTIONS

(1) ENSURE THIS OP IS VALID BY CHECKING THE REVISION DATE ABOVE WITH THE CURRENT SNDLRCS O&M MANUAL.
(2) EACH STEP SHOULD BE CHECKED INDIVIDUALLY.
(3) REPORT ANY DISCREPANCY TO THE DIVING SUPERVISOR.

SNDLRCS OPERATOR: _____

DIVING SUPERVISOR: _____

Downloaded from http://www.everyspec.com

ITEM	COMPONENT	DESCRIPTION	PROCEDURE	LOCATION	CHECK	NOTE
INNER LOCK (IL) PRESSURIZED						
1	Pressurization control valve	ALP-V-5	Shut.	Control console		
2	BIBS mask		Divers off BIBS.			
NOTE **Investigate source of pressure. Isolate and repair as required.**						
3	IL fast exhaust valve	EXH-V-5	Open; exhaust as necessary to maintain depth.	Control console		See Note Above
4	BIBS oxygen hull stop valve	OLP-V-6	Shut.	Under control console		
5	BIBS air hull stop valve	ALP-V-11	Shut.	Under control console		
6	Mixed Gas stop valve	MLP-V-4	Shut.	Under control console		
USE THESE STEPS IF OUTER LOCK (OL) IS PRESSURIZED						
7	OL pressurization valve	ALP-V-13	Shut.	Control console		
8	BIBS mask		Divers off BIBS.			
9	BIBS air hull stop valve	ALP-V-15	Shut.	Under control console		
10	BIBS oxygen hull stop valve	OLP-V-8	Shut.	Under control console		
- END OF PROCEDURE -						

Downloaded from http://www.everyspec.com

STANDARD NAVY DOUBLE-LOCK RECOMPRESSION CHAMBER SYSTEM (SNDLRCS) EMERGENCY PROCEDURE

SNDLRCS EP-3

CONTAMINATED ATMOSPHERE

Date: December 1, 2007

OP ASSIGNED TO: _____ DATE:_____

SPECIAL INSTRUCTIONS

(1) ENSURE THIS OP IS VALID BY CHECKING THE REVISION DATE ABOVE WITH THE CURRENT SNDLRCS O&M MANUAL.
(2) EACH STEP SHOULD BE CHECKED INDIVIDUALLY.
(3) REPORT ANY DISCREPANCY TO THE DIVING SUPERVISOR.

SNDLRCS OPERATOR: _____

DIVING SUPERVISOR: _____

Downloaded from http://www.everyspec.com

ITEM	COMPONENT	DESCRIPTION	PROCEDURE	LOCATION	CHECK	NOTE
INNER LOCK (IL) PRESSURIZED						
NOTE **Have tender connect their BIBS to air ALP-QD-1 or -2, then connect patient's BIBS to other air fitting or oxygen OLP-QD-1 or -2 as directed by Diving Supervisor.**						
1	Don BIBS mask; check for proper connection.					
2	Primary air shutoff valve	ALP-V-3	Shut.	Control console		
3	Secondary air shutoff valve	ALP-V-9	Open.	Control console		
NOTE **Switch to secondary air supply if required.**						
NOTE **Identify/isolate source of contamination.**						
NOTE **Maintain divers on BIBS until contamination has been identified and cleared.** **Gas supply may be limited; carefully monitor gas usage.**						
4	IL pressurization valve; IL fast exhaust valve	ALP-V-5 EXH-V-5	Ventilate IL as directed by Diving Supervisor.	Control console		
5	Monitor IL atmosphere with installed gas analyzer.					
6	Monitor BIBS supply pressures.					
ADDITIONAL STEPS IF OUTER LOCK (OL) IS PRESSURIZED.						
NOTE **Have tender ensure OL BIBS supply is connected to ALP-QD-5 or -6, or OLP-QD-1 or -2.**						
7	Chamber occupant(s) go on BIBS in OL.					
8	OL pressurization valve; OL fast exhaust valve	ALP-V-13 EXH-V-8	Ventilate OL as directed by Diving Supervisor.	Control console		
- END OF PROCEDURE -						

Downloaded from http://www.everyspec.com

STANDARD NAVY DOUBLE-LOCK (SNDLRCS)
EMERGENCY PROCEDURE

SNDLRCS EP-4

FIRE IN CHAMBER

Date: December 1, 2007

OP ASSIGNED TO: _____ DATE:_____

SPECIAL INSTRUCTIONS

(1) ENSURE THIS OP IS VALID BY CHECKING THE REVISION DATE ABOVE WITH THE CURRENT SNDLRCS O&M MANUAL.
(2) EACH STEP SHOULD BE CHECKED INDIVIDUALLY.
(3) REPORT ANY DISCREPANCY TO THE DIVING SUPERVISOR.

SNDLRCS OPERATOR: _____

DIVING SUPERVISOR: _____

Downloaded from http://www.everyspec.com

ITEM	COMPONENT	DESCRIPTION	PROCEDURE	LOCATION	CHECK	NOTE
INNER LOCK (IL) PRESSURIZED						
1	BIBS oxygen hull stop valve	OLP-V-6	Shut.	Under control console		
2	BIBS mixed gas hull stop valve	MLP-V-4	Shut	Under control console		
3	Occupants connect BIBS mask to air quick disconnects (ALP-QD-1-4) and don BIBS.					
4	ECS and CO_2 scrubber		Turn OFF.	Control console		
5	Occupants extinguish/smother fire.					
6	Outside tender standby to exhaust IL as directed by Diving Supervisor.					
ADDITIONAL STEPS IF OUTER LOCK (OL) IS PRESSURIZED						
7	BIBS oxygen hull stop valve	OLP-V-8	Shut.	Under control console		
8	Occupants connect BIBS mask to air quick disconnects (ALP-QD-5-7) and don BIBS.					
NOTE **The chamber air must be sampled for CO_2 every ten minutes for the remainder of the treatment.**						
9	Outside tender standby to exhaust OL as directed by Diving Supervisor.					
- END OF PROCEDURE -						

Downloaded from http://www.everyspec.com

STANDARD NAVY DOUBLE-LOCK RECOMPRESSION CHAMBER SYSTEM (SNDLRCS) EMERGENCY PROCEDURE

SNDLRCS EP-5

LOSS OF OXYGEN

Date: December 1, 2007

OP ASSIGNED TO: _____ DATE:_____

SPECIAL INSTRUCTIONS

(1) ENSURE THIS OP IS VALID BY CHECKING THE REVISION DATE ABOVE WITH THE CURRENT SNDLRCS O&M MANUAL.
(2) EACH STEP SHOULD BE CHECKED INDIVIDUALLY.
(3) REPORT ANY DISCREPANCY TO THE DIVING SUPERVISOR.

SNDLRCS OPERATOR: _____

DIVING SUPERVISOR: _____

Downloaded from http://www.everyspec.com

ITEM	COMPONENT	DESCRIPTION	PROCEDURE	LOCATION	CHECK	NOTE
INNER LOCK (IL) PRESSURIZED						
1	BIBS mask		Remove from patient.	Inside IL		
2	BIBS quick disconnect		Inside tender check for proper connection.	Inside IL		
3	Oxygen supply LP gauge	OLP-G-1	Check for 75 - 100 psig.	Control console		
4	BIBS “in use” oxygen supply control valve	OLP-V-2 or OLP-V-4	Shut.	Control console		
5	BIBS “standby” oxygen supply valve	OLP-V-2 or OLP-V-4	Open.	Control console		
6	Oxygen supply LP gauge	OLP-G-1	Check for 75 - 100 psig.	Control console		
7	Resume oxygen breathing as directed by Diving Supervisor.					
8	Outside personnel determine cause of failure.					
9	Outside personnel determine cause of oxygen failure and repair.					
- END OF PROCEDURE -						

Downloaded from http://www.everyspec.com

STANDARD NAVY DOUBLE-LOCK RECOMPRESSION CHAMBER SYSTEM (SNDLRCS) EMERGENCY PROCEDURE

SNDLRCS EP-6

LOSS OF PRIMARY AIR SUPPLY

Date: December 1, 2007

OP ASSIGNED TO: _____ DATE:_____

SPECIAL INSTRUCTIONS

(1) ENSURE THIS OP IS VALID BY CHECKING THE REVISION DATE ABOVE WITH THE CURRENT SNDLRCS O&M MANUAL.
(2) EACH STEP SHOULD BE CHECKED INDIVIDUALLY.
(3) REPORT ANY DISCREPANCY TO THE DIVING SUPERVISOR.

SNDLRCS OPERATOR: _____

DIVING SUPERVISOR: _____

Downloaded from http://www.everyspec.com

ITEM	COMPONENT	DESCRIPTION	PROCEDURE	LOCATION	CHECK	NOTE
ONLY INNER LOCK (IL) PRESSURIZED						
1	Primary air shutoff valve	ALP-V-3	Shut.	Control console		
2	Secondary air shutoff valve	ALP-V-9	Open.	Control console		
3	Primary pressurization valve	ALP-V-5	Maintain depth.	Control console		
4	Outside personnel investigate source of primary air loss and repair.					
- END OF PROCEDURE -						

Downloaded from http://www.everyspec.com

STANDARD NAVY DOUBLE-LOCK RECOMPRESSION CHAMBER SYSTEM (SNDLRCS) EMERGENCY PROCEDURE

SNDLRCS EP-7

LOSS OF PRIMARY POWER

Date: December 1, 2007

OP ASSIGNED TO: _____ DATE:_____

SPECIAL INSTRUCTIONS

(1) ENSURE THIS OP IS VALID BY CHECKING THE REVISION DATE ABOVE WITH THE CURRENT SNDLRCS O&M MANUAL.
(2) EACH STEP SHOULD BE CHECKED INDIVIDUALLY.
(3) REPORT ANY DISCREPANCY TO THE DIVING SUPERVISOR.

SNDLRCS OPERATOR: _____

DIVING SUPERVISOR: _____

Downloaded from http://www.everyspec.com

ITEM	COMPONENT	DESCRIPTION	PROCEDURE	LOCATION	CHECK	NOTE
1	Verify that UPS has taken over.					
2	Secure IL scrubber and ECS in the chamber.					

NOTE

When UPS has taken over, it will have backup power for two hours when only the two chamber lights are on. When the chamber lights are on and the one overhead light is on, it will have back up power for one hour.

- END OF PROCEDURE -

Downloaded from http://www.everyspec.com

APPENDIX C

STANDARD NAVY DOUBLE-LOCK RECOMPRESSION CHAMBER SYSTEM (SNDLRCS) SPARE PARTS

SPARE PARTS LISTS

SECTION C-1	AIR SUPPLY RACK ASSEMBLY (ASRA) SPARE PARTS – DRAWING NO. 6961898
SECTION C-2	MEDICAL LOCK SPARE PARTS – DRAWING NO. 7317768
SECTION C-3	RECOMPRESSION CHAMBER SPARE PARTS – DRAWING NO. 7317812
SECTION C-4	OXYGEN REDUCING STATION SPARE PARTS – DRAWING NO. 75395548
SECTION C-5	HP AIR REDUCING STATION SPARE PARTS – DRAWING NO. 7539554

Downloaded from http://www.everyspec.com

THIS PAGE INTENTIONALLY LEFT BLANK

Downloaded from http://www.everyspec.com

C-1 AIR SUPPLY RACK ASSEMBLY (ASRA) SPARE PARTS – DRAWING NO. 6961898.

Table C-1. Spare Parts for Air Supply Rack Assembly (ASRA)

VALVES						
ITEM N0.	**DESCRIPTION**	**PART NUMBER**	**MANUFACTURER**	**SOFTWARE KIT**	**INITIAL ONBOARD SPARES**	**QTY AT ESSM BASE**
AHP-V-440 AHP-V-441 AHP-V-442	VALVE VENT	SS-3NBVC04 (DRAWING NOS. 6961894 AND 6961956)	WHITEY	NA	1	1
NA	VALVE VENT (O_2 SERVICE)	SS-3NBVC04-SC11	WHITEY	NA	1	1
NA	SOFT KIT	T-9K-3N	WHITEY	NA	3	NA
AHP-V-430	RELIEF VALVE FOR CHARGE PORT SET AT 5500 PSIG	SS-4R3A-1509-H (DRAWING NOS. 6961894 AND 6961956)	NUPRO	NA	NA	1
NA	SPRING KIT FOR REPAIRING RELIEF VALVE SS-4R3A-1509-H	177-R3A-K1-H	NUPRO	NA	1	NA
NA	SPRING KIT FOR CONVERTING RELIEF VALVE SS-4R3A-1509-H TO –F TO SUPPORT 3300 PSIG FOR USE AS A SCUBA PORT VALVE	177-R3A-K1-F	NUPRO	NA	1	1
FILTERS						
ITEM N0.	**DESCRIPTION**	**PART NUMBER**	**MANUFACTURER**	**SOFTWARE KIT**	**INITIAL ONBOARD SPARES**	**QTY AT ESSM BASE**
F-1014	FILTER ELEMENT FOR FILTER PART NO. 43 26 G G 20 V N	416G-20VN GPN U-10007	NORMAN FILTERS	NA	1	NA
F-1014	SEAL KIT	43-4426-18 GPN U-10009	NORMAN FILTERS	NA	1	NA

Items printed in green receive O_2 service.

Table C-1. Spare Parts for Air Supply Rack Assembly (ASRA) (contd)

MISCELLANEOUS						
ITEM N0.	**DESCRIPTION**	**PART NUMBER**	**MANUFACTURER**	**SOFTWARE KIT**	**INITIAL ONBOARD SPARES**	**QTY AT ESSM BASE**
NA	REPAIR KIT	17314	CIRCLE SEAL CONTROLS	NA	3	NA
F-025	RUPTURE DISK (FOR VALVES AHP-V-401 THROUGH AHP-V-409)	6255-8000 (SUPPLIED WITH VALVES), DRAWING NO. 6961894	CIRCLE SEAL CONTROLS	NA	1	NA
F-024	THERMAL SAFETY DEVICE (FOR VALVES AHP-V-410 THROUGH AHP-V-418)	7770 (SUPPLIED WITH VALVES), DRAWING NO. 6961894	CIRCLE SEAL CONTROLS	NA	1	NA
6962010-7 6962032-13 6962070-22	AIR HOSE PLUG ASSEMBLY	SS-8-VCO-BP	CAJON CO.	NA	1	NA
O-RINGS						
ITEM N0.	**DESCRIPTION**	**PART NUMBER**	**MANUFACTURER**	**SOFTWARE KIT**	**INITIAL ONBOARD SPARES**	**QTY AT ESSM BASE**
6961930-61 6961956-46	VITON O-RING (MIL-R-83248 TYPE 1 CLASS 2)	M83248/2-008	COMMERCIAL	NA	5	NA
6961898-29 6961902-16 6961930-23 6961956-38	VITON O-RING (MIL-R-83248 TYPE 1 CLASS 2)	M83248/2-010	COMMERCIAL	NA	5	NA
NA	VITON O-RING (MIL-R-83248 TYPE 1 CLASS 2)	M83248/2-011	COMMERCIAL	NA	5	NA
6961956-70	VITON O-RING (MIL-R-83248 TYPE 1 CLASS 2)	M83248/2-012	COMMERCIAL	NA	5	NA
6961898-72	VITON O-RING (MIL-R-83248 TYPE 1 CLASS 2)	M83248/2-013	COMMERCIAL	NA	5	NA

Downloaded from http://www.everyspec.com

Downloaded from http://www.everyspec.com

Table C-1. Spare Parts for Air Supply Rack Assembly (ASRA) (contd)

O-RINGS (CONTD)						
ITEM N0.	**DESCRIPTION**	**PART NUMBER**	**MANUFACTURER**	**SOFTWARE KIT**	**INITIAL ONBOARD SPARES**	**QTY AT ESSM BASE**
6961902-27 6961930-63 6961956-62 6962036-4	VITON O-RING (MIL-R-83248 TYPE 1 CLASS 2)	M83248/2-015	COMMERCIAL		5	NA
6961902-28	VITON O-RING (MIL-R-83248 TYPE 1 CLASS 2)	M83248/2-019	COMMERCIAL		5	NA
6961895-14 6961898-31 6961902-14 6961930-24 6961956-37 6962037-3	VITON O-RING (MIL-R-83248 TYPE 1 CLASS 2)	M83248/2-111	COMMERCIAL		5	NA
NA	VITON O-RING (MIL-R-83248 TYPE 1 CLASS 2)	M83248/2-113	COMMERCIAL		5	NA
6961898-43 6961902-15 6961930-25 6961956-40	VITON O-RING (MIL-R-83248 TYPE 1 CLASS 2)	M83248/2-904	COMMERCIAL		5	NA
6961898-28 6961930-26 6961956-39	VITON O-RING (MIL-R-83248 TYPE 1 CLASS 2)	M83248/2-906	COMMERCIAL		5	NA
6961902-12 6961930-32 6961956-41	VITON O-RING (MIL-R-83248 TYPE 1 CLASS 2)	M83248/2-908	COMMERCIAL		5	NA
6961898-30	VITON O-RING (MIL-R-83248 TYPE 1 CLASS 2)	M83248/2-910	COMMERCIAL		5	NA
6961902-13 6961930-89	VITON O-RING (MIL-R-83248 TYPE 1 CLASS 2)	M83248/2-912	COMMERCIAL		5	NA

Downloaded from http://www.everyspec.com

C-2 MEDICAL LOCK SPARE PARTS – DRAWING NO. 7317768.

Table C-2. Spare Parts for Medical Lock

O-RINGS						
ITEM N0.	**DESCRIPTION**	**PART NUMBER**	**MANUFACTURER**	**SOFTWARE KIT**	**INITIAL ONBOARD SPARES**	**QTY AT ESSM BASE**
-23	MEDLOCK O-RING, 0.139" CORD DIAMETER X 247.2 MM ID, MADE OF MIL-G-15698 CLASS 1 NITRILE	2-273 N674-70	PARKER HANNIFIN	NA	1	NA
7317765-25 7317767-37	MEDLOCK O-RING, 0.210" CORD DIAMETER X 329.6 MM ID, MADE OF MIL-G-15696B CLASS 1 NITRILE	2-382 N674-70	PARKER HANNIFIN	NA	1	NA
MISCELLANEOUS						
ITEM N0.	**DESCRIPTION**	**PART NUMBER**	**MANUFACTURER**	**SOFTWARE KIT**	**INITIAL ONBOARD SPARES**	**QTY AT ESSM BASE**
-2	LIP SEAL - OUTER DOOR	T7844	DRAEGER AEROSPACE	NA	1	1
-5	(MEDLOCK) INTERLOCK SLIDER	111-31408-1	FINK ENGINEERING	NA	1	NA

Downloaded from http://www.everyspec.com

C-3 RECOMPRESSION CHAMBER SPARE PARTS – DRAWING NO. 7317812.

Table C-3. Spare Parts for Recompression Chamber

VALVES						
ITEM N0.	**DESCRIPTION**	**PART NUMBER**	**MANUFACTURER**	**SOFTWARE KIT**	**INITIAL ONBOARD SPARES**	**QTY. AT ESSM BASE**
ALP-R-1 ALP-R-2 ALP-R-3 ALP-R-4 ALP-R-5 ALP-R-6 ALP-R-7	REDUCING REGULATOR	801804-00	SCOTT AVIATION	Demand Regulator Repair Kit (RK-800954-01) Exhaust Regulator Repair Kit (RK-801274-00)	2 (2)	NA
F-1029	QUICK DISCONNECT	18969-00	SCOTT AVIATION		2	NA
F-2019 F-3015	QUICK DISCONNECT (O_2 SERVICE)	18969-00	SCOTT AVIATION		2	NA
F-4031	QUICK DISCONNECT (O_2 SERVICE)	59853-00	SCOTT AVIATION		2	NA
ALP-V-1 ALP-V-7	RELIEF VALVE - BRASS	19KDDK300 (OLD NO. WAS 19-301-300)	CONBRACO INDUSTRIES	None available; send to test shop or replace	NA	2
ALP-V-2 ALP-V-8 ATM-V-1 ATM-V-3 ATM-V-5 ATM-V-7 EQ-V-3	(INSTRUMENT VALVE) 316SST	PLC-10669 MIL-V-24578B	CPV	Seal Kit (PLC-10669-SK)	2 (1)	7 (2)
MLP-V-3 OLP-V-5	(INSTRUMENT VALVE) 316SST (O_2 SERVICE)	PLC-10669 MIL-V-24578B	CPV	Seal Kit (PLC-10669-SK)	1 (1)	2 (2)

Footnotes:

(1) Software Kit
(2) Hardware Assembly

Items printed in green receive O_2 service.

Table C-3. Spare Parts for Recompression Chamber (contd)

VALVES (CONTD)						
ITEM N0.	**DESCRIPTION**	**PART NUMBER**	**MANUFACTURER**	**SOFTWARE KIT**	**INITIAL ONBOARD SPARES**	**QTY. AT ESSM BASE**
ALP-V-3 ALP-V-4 ALP-V-9 ALP-V-10	(1/4 TURN BALL VALVE W/ OVAL HANDLE) BRASS	B-65TF16 HANDLE – SS-51K-65K-BK	WHITEY	Repair Kit (SS-91K-R65T)	1 (2)	4 (2)
ATM-V-9	(1/4 TURN BALL VALVE) BRASS	B-65TF16 (OLD NO. WAS B-65TF16-QT-B)	WHITEY / SWAGELOK	Repair Kit (SS-91K-R65T)	1 (2)	1 (2)
ALP-V-5 ALP-V-13	(ANGLE VALVE) 316SST	A8187515KR	DRAGON INC.	Repair Kit (95S-17774-KR)	2 (1)	2 (2)
ALP-V-6 ALP-V-14	CHECK VALVE	B-16C4-1/3	NUPRO	Repair Kit (M-16C4-SG-1/3) Elastomer Kit (VI70-14C-44) Spring Kit (302-14C-K2-1/3) Gasket Kit (A-14C-K6)	1 (2)	NA
ALP-V-11 ALP-V-15 ECS-V-1 ECS-V-2 EXH-V-1 EXH-V-2 EXH-V-3 EXH-V-4	(1/4 TURN BALL VALVE) BRASS	B-63TF8 (OLD NO. WAS B-63TF8-QT-B)	WHITEY	Repair Kit (SS-91K-R63T)	2 (2)	4 (2)
ALP-V-12 ALP-V-16	(CHECK VALVE) BRASS	B-8C4-1/3	NUPRO	Repair Kit (M-8C4-SG -1/3)	1 (2)	NA

Footnotes:

(1) Software Kit
(2) Hardware Assembly

Downloaded from http://www.everyspec.com

Downloaded from http://www.everyspec.com

Table C-3. Spare Parts for Recompression Chamber (contd)

VALVES (CONTD)						
ITEM N0.	**DESCRIPTION**	**PART NUMBER**	**MANUFACTURER**	**SOFTWARE KIT**	**INITIAL ONBOARD SPARES**	**QTY. AT ESSM BASE**
MLP-V-5 OLP-V-7 OLP-V-9	(CHECK VALVE) BRASS (O_2 SERVICE)	B-8C4-1/3	NUPRO	Repair Kit (M-8C4-SG -1/3)	1 (2)	NA
ATM-V-2 ATM-V-4 ATM-V-6 ATM-V-8 ATM-V-11 ATM-V-12 ATM-V-13 ATM-V-14 EQ-V-2 EQ-V-4 EQ-V-5	(1/4 TURN BALL VALVE) BRASS	B-62TF4 (OLD NO. WAS B-62TF4-QT-B)	WHITEY	Repair Kit (SS-91K-R62T)	2 (2)	4 (2)
ATM-V-10	(RELIEF VALVE - ASME) BRASS	M5132-8M(L)-110M ASME	CIRCLE SEAL	Repair Kit (K/M5132-8M(L)-110M ASME)	1 (2)	1 (2)
ATM-V-15	CHECK VALVE	2M-C2L-1/3-BN-B (OLD NO. WAS 2M-C2L-1/3-BV-B)	PARKER HANNIFIN	Repair Kit (KIT-C2-1/3-BN)	1 (2)	NA
EQ-V-1	(3-WAY BALL VALVE) 316SST	SS-62XTF4	WHITEY	SS-91K-R62T	1 (2)	1 (2)
EXH-R-1 EXH-R-2	(REGULATOR - BACK PRESSURE) BRASS	26-2912-282A	TESCOM	Soft Goods Kit (389-1913) Repair Kit (389-2809)	NA	1 (2)

Footnote:

(2) Hardware Assembly

Items printed in green receive O_2 service.

Table C-3. Spare Parts for Recompression Chamber (contd)

VALVES (CONTD)						
ITEM N0.	**DESCRIPTION**	**PART NUMBER**	**MANUFACTURER**	**SOFTWARE KIT**	**INITIAL ONBOARD SPARES**	**QTY. AT ESSM BASE**
EXH-V-5 EXH-V-7 EXH-V-8 EXH-V-9	(1/4-TURN BALL VALVE) 316SST	SS-67TF24 (OLD NO. WAS B-67TF24QT-SS)	WHITEY / SWAGLOCK	Repair Kit (SS-91K-R67T)	1 (1)	1 (2)
EXH-V-6	(NEEDLE VALVE) 316SST	8180515-KR	DRAGON INC.	Repair Kit (95S-17772-K-R)	1 (1)	1 (2)
MLP-V-1 OLP-V-1 OLP-V-3	(RELIEF VALVE) BRASS (O_2 SERVICE)	B-8CPA2-150	NUPRO	Elastomer Kit (BU90-8CP-K4) Spring Kit (302-8CA-K2-150)	1 (2)	3 (2)
MLP-V-2 MLP-V-4	(NEEDLE VALVE) BRASS (O_2 SERVICE) (MIXED GAS)	B-18VF8 (OLD NO. WAS B-18VF8-ST) SS-18VF8-PK SUGGESTED AS REPLACEMENT PART	WHITEY	Stem Packing Kit (PFA-91K-18)	1 (2)	2 (2)
OLP-V-2 OLP-V-4 OLP-V-6 OLP-V-8	(NEEDLE VALVE) BRASS (O_2 SERVICE)	B-18VF8 (OLD NO. WAS B-18VF8-G) HANDLE KIT (PH-5K-7K-BK)	WHITEY / SWAGLOCK	Stem Packing Kit (PFA-91K-18)	1 (2)	4 (2)

Footnotes:

(1) Software Kit
(2) Hardware Assembly

Items printed in green receive O_2 service.

Downloaded from http://www.everyspec.com

Downloaded from http://www.everyspec.com

Table C-3. Spare Parts for Recompression Chamber (contd)

GAUGES						
ITEM N0.	**DESCRIPTION**	**PART NUMBER**	**MANUFACTURER**	**SOFTWARE KIT**	**INITIAL ONBOARD SPARES**	**QTY. AT ESSM BASE**
ALP-G-1 ALP-G-2	GAUGE, PRESSURE 2.5" DIA, 0-500 PSI	25502-27B21GAD-GCL-GCO	3D INSTRUMENTS	2.5" Acrylic Crystal for ABS Case (3045-0005) 2.5" Snap Ring (2167-0009) 1/16" Diameter Neoprene Crystal Gasket Per Foot – 0.5 Feet (2074-0006-1)	NA	2 (2)
ALP-G-3	GAUGE, PRESSURE 2.5" DIA, 0-250 FSW	25502-23B11GAD-GCO-GDA-CBE	3D INSTRUMENTS	2.5" Acrylic Crystal for ABS Case (3045-0005) 2.5" Snap Ring (2167-0009) 1/16" Diameter Neoprene Crystal Gasket Per Foot – 0.5 Feet (2074-0006-1)	NA	1 (2)
MLP-G-1	GAUGE, INLET PRESSURE 2.5" DIA, 0-500 PSI (O_2 SERVICE)	25502-27B21GAD-GBK-GCO-GDA	3D INSTRUMENTS	2.5" Acrylic Crystal for ABS Case (3045-0005) 2.5" Snap Ring (2167-0009) 1/16" Diameter Neoprene Crystal Gasket Per Foot – 0.5 Feet (2074-0006-1)	NA	1 (2)
OLP-G-1	GAUGE, 2.5" DIA, BACK CONNECTION, 0-500 PSI (O_2 SERVICE)	25502-27B21GAD-GBK-GCO-GDA	3D INSTRUMENTS	2.5" Acrylic Crystal for ABS Case (3045-0005) 2.5" Snap Ring (2167-0009) 1/16" Diameter Neoprene Crystal Gasket Per Foot – 0.5 Feet (2074-0006-1)	NA	1 (2)
PN-G-1 PN-G-2 PN-G-3 PN-G-4	GAUGE, PRESSURE 8" DIA, 0-250 FSW	25546-23B21GAD-GDA-CBE	3D INSTRUMENTS	8.5" Acrylic Crystal (2045-0006) 8.5" Snap Ring (2167-0002) 1/16" Diameter Neoprene Crystal Gasket Per Foot – 2 Feet (2074-0006-1)	NA	4 (2)

Footnote:

(2) Hardware Assembly

Items printed in green receive O_2 service.

Table C-3. Spare Parts for Recompression Chamber (contd)

FILTERS						
ITEM N0.	**DESCRIPTION**	**PART NUMBER**	**MANUFACTURER**	**SOFTWARE KIT**	**INITIAL ONBOARD SPARES**	**QTY. AT ESSM BASE**
F-1014	FILTER ELEMENT FOR FILTER 4326GG20VN	416G-20VN	NORMAN FILTERS	Seal Kit (43-4426-18)	1	NA
OLP-F-1 OLP-F-2 MLP-F-1	MONEL 15 MICRON FILTER ELEMENT FOR FILTER B-8TF2-15 (O_2 SERVICE)	M-8F-K4-15	SWAGELOK	Filter Gasket (SS-8TF-K2) Sintered Element (SS-8F-K4-15)	3	NA
O-RINGS						
ITEM N0.	**DESCRIPTION**	**PART NUMBER**	**MANUFACTURER**	**SOFTWARE KIT**	**INITIAL ONBOARD SPARES**	**QTY. AT ESSM BASE**
7317750-22	MANWAY DOOR O-RING (9.53 MM CORD DIAMETER X 782.0 MM ID. MADE OF N674-70 BUNA-N ELASTOMER WITH A 75 DUROMETER)	VSP-0611 N674-70	WYATT SEAL, INC.		NA	2
7317760-9	VIEWPORT O-RING	2-375 N674-70	PARKER HANNIFIN		NA	2
NOTE 22	VITON O-RING (MIL-R-83248 TYPE 1 CLASS 2) 1/4" TUBE	M83248/2-011 V90	COMMERCIAL		12	NA
NOTE 22	VITON O-RING (MIL-R-83248 TYPE 1 CLASS 2) 1/4" TUBE (O_2 SERVICE)	M83248/2-011 V90	COMMERCIAL		4	NA
NOTE 23	VITON O-RING (MIL-R-83248 TYPE 1 CLASS 2) 3/8" TUBE	M83248/2-012 V90	COMMERCIAL		2	NA
NOTE 24	VITON O-RING (MIL-R-83248 TYPE 1 CLASS 2) 1/2" TUBE	M83248/2-014 V90	COMMERCIAL		10	NA

Items printed in green receive O_2 service.

Downloaded from http://www.everyspec.com

Downloaded from http://www.everyspec.com

Table C-3. Spare Parts for Recompression Chamber (contd)

O-RINGS						
ITEM N0.	**DESCRIPTION**	**PART NUMBER**	**MANUFACTURER**	**SOFTWARE KIT**	**INITIAL ONBOARD SPARES**	**QTY. AT ESSM BASE**
NOTE 24	VITON O-RING (MIL-R-83248 TYPE 1 CLASS 2) 1/2" TUBE (O_2 SERVICE)	M83248/2-014 V90	COMMERCIAL		20	NA
NOTE 25	VITON O-RING (MIL-R-83248 TYPE 1 CLASS 2) 1" TUBE	M83248/2-021 V90	COMMERCIAL		10	NA
NOTE 26	VITON O-RING (MIL-R-83248 TYPE 1 CLASS 2) 1 1/2" TUBE	M83248/2-029 V90	COMMERCIAL		8	NA
MISCELLANEOUS						
ITEM N0.	**DESCRIPTION**	**PART NUMBER**	**MANUFACTURER**	**SOFTWARE KIT**	**INITIAL ONBOARD SPARES**	**QTY. AT ESSM BASE**
F-9010	CO_2 SCRUBBER MODEL 3.80.1018 CANISTER	3.80.1018-3	HYTECH		NA	1
	AQUA BREEZE III SCRUBBER CANISTER	6000-C				
	AQUA BREEZE II SCRUBBER CANISTER	5000-C				
7317764-1	VIEWPORT COVER (CLEAR ACRYLIC 304.8 X 6.35 MM)	SNDL DRAWING NO. 592-7317764-1	COWAN		1	1
NA	GAS SAMPLING WHIP (PARKER HANNIFIN FITTING: 2Z(A)-Q4P-BBC-CPI-TZ; NON-VALVED PLUG COUPLER)	TE 1800B	SMC		NA	2
ATM-FL-1	FLOWMETER	VFA-22-BV	DWYER		1	NA
7317815-20	LAMP, FLUORESCENT, 9-WATT, G23 BASE	9W/41 RALUX	RADIUM		2	NA

Items printed in green receive O_2 service.

Downloaded from http://www.everyspec.com

C-4 OXYGEN REDUCING STATION SPARE PARTS – DRAWING NO. 7539548

Table C-4. Spare Parts for Oxygen Reducing Station

VALVES						
VALVE N0.	**DESCRIPTION**	**PART NUMBER**	**MANUFACTURER**	**SOFTWARE KIT**	**INITIAL ONBOARD SPARES**	**QTY AT ESSM BASE**
OHP-R-205 OHP-R-206	(REGULATOR - OXYGEN) BRASS (O_2 SERVICE)	44F5417T308	TESCOM CORP	Soft Goods Kit (389F7022) Repair Kit (389F7023)	1 (3)	2 (2)
OHP-V-201 OHP-V-203	(NEEDLE VALVE) MONEL 400 (O_2 SERVICE)	M-6NRVCO8-M (OLD NO. WAS M-6NRVCO8)	WHITEY	PK-9K-6N	1 (2)	2 (2)
OHP-V-202 OHP-V-204 OLP-V-207 OLP-V-208	(NEEDLE VALVE – GAUGE STOP) MONEL 400 (O_2 SERVICE)	PLC-11095 L /F	CPV	Seal Kit (PLC-11095-SK)	4 (1)	4 (2)
GAUGES						
GAUGE N0.	**DESCRIPTION**	**PART NUMBER**	**MANUFACTURER**	**SOFTWARE KIT**	**INITIAL ONBOARD SPARES**	**QTY AT ESSM BASE**
OHP-G-201 OHP-G-202	GAUGE, PRESSURE 2.5" DIA, 0-4000 PSI (O_2 SERVICE)	25502-34B31 MCD	3D INSTRUMENTS	2.5" Acrylic Crystal for ABS Case (3045-0005) 2.5" Snap Ring (2167-0009) 1/16" Diameter Neoprene Crystal Gasket Per Foot - 0.5 Feet (2074-0006-1)	NA	2 (2)

Footnotes:

(1) Software Kit
(2) Hardware Assembly
(3) Includes both the Soft Goods and Repair Kits

Items printed in green receive O_2 service.

Table C-4. Spare Parts for Oxygen Reducing Station (contd)

GAUGES (CONTD)						
GAUGE N0.	**DESCRIPTION**	**PART NUMBER**	**MANUFACTURER**	**SOFTWARE KIT**	**INITIAL ONBOARD SPARES**	**QTY AT ESSM BASE**
OLP-G-203 OLP-G-204	GAUGE, PRESSURE 2.5" DIA, 0-500 PSI (O_2 SERVICE)	25502-27B31 MCD	3D INSTRUMENTS	2.5" Acrylic Crystal for ABS Case (3045-0005) 2.5" Snap Ring (2167-0009) 1/16" Diameter Neoprene Crystal Gasket Per Foot - 0.5 Feet (2074-0006-1)	NA	2 (2)
O-RINGS						
ITEM N0.	**DESCRIPTION**	**PART NUMBER**	**MANUFACTURER**	**SOFTWARE KIT**	**INITIAL ONBOARD SPARES**	**QTY AT ESSM BASE**
NA	VITON O-RING (MIL-R-83248 TYPE 1 CLASS 2)	M83248/2-005	COMMERCIAL		5	NA
7539546-25	VITON O-RING (MIL-R-83248 TYPE 1 CLASS 2)	M83248/2-008	COMMERCIAL		5	NA
7539546-25	VITON O-RING (MIL-R-83248 TYPE 1 CLASS 2) (O_2 SERVICE)	M83248/2-008	COMMERCIAL		5	NA
7539546-26	VITON O-RING (MIL-R-83248 TYPE 1 CLASS 2) (O_2 SERVICE)	M83248/2-013	COMMERCIAL		5	NA
7539546-27	VITON O-RING (MIL-R-83248 TYPE 1 CLASS 2)	M83248/2-904	COMMERCIAL		5	NA
7539546-27	VITON O-RING (MIL-R-83248 TYPE 1 CLASS 2) (O_2 SERVICE)	M83248/2-904	COMMERCIAL		5	NA
7539546-28	VITON O-RING (MIL-R-83248 TYPE 1 CLASS 2)	M83248/2-908	COMMERCIAL		5	NA

Footnote:

(2) Hardware Assembly

Items printed in green receive O_2 service.

Downloaded from http://www.everyspec.com

Table C-4. Spare Parts for Oxygen Reducing Station (contd)

O-RINGS (CONTD)						
GAUGE N0.	**DESCRIPTION**	**PART NUMBER**	**MANUFACTURER**	**SOFTWARE KIT**	**INITIAL ONBOARD SPARES**	**QTY AT ESSM BASE**
7539546-28	VITON O-RING (MIL-R-83248 TYPE 1 CLASS 2) (O_2 SERVICE)	M83248/2-908	COMMERCIAL		5	NA
7539546-29	VITON O-RING (MIL-R-83248 TYPE 1 CLASS 2) (O_2 SERVICE)	M83248/2-111	COMMERCIAL		5	NA
7539546-30	VITON O-RING (MIL-R-83248 TYPE 1 CLASS 2)	M83248/2-010	COMMERCIAL		5	NA
7539546-30	VITON O-RING (MIL-R-83248 TYPE 1 CLASS 2) (O_2 SERVICE)	M83248/2-010	COMMERCIAL		5	NA

Items printed in green receive O_2 service.

Downloaded from http://www.everyspec.com

Downloaded from http://www.everyspec.com

C-5 HP AIR REDUCING STATION SPARE PARTS – DRAWING NO. 7539554.

Table C-5. Spare Parts for HP Air Reducing Station

VALVES						
VALVE N0.	**DESCRIPTION**	**PART NUMBER**	**MANUFACTURER**	**SOFTWARE KIT**	**INITIAL ONBOARD SPARES**	**QTY AT ESSM BASE**
AHP-R-108 AHP-R-109	(REGULATOR - AIR) CRES303	44F-1323-0812-262 (OLD NO. WAS 44-1323-0812-262)	TESCOM CORP	Soft Goods Kit (389F7496) Repair Kit (389F7497)	1 (2)	2 (2)
AHP-V-101 AHP-V-102	(SHUTOFF VALVE - AIR INLET) CRES316	G2SGM8-O8C	CPV	Seal Kit (G2SGM8-O8C-SK)	2 (1)	2 (2)
AHP-V-103 AHP-V-107 ALP-V-106 ALP-V-110	NEEDLE VALVE - GAUGE STOP (HP)	PLC-10669	CPV	Seal Kit (PLC-10669-SK)	4 (1)	4 (2)
ALP-V-104 ALP-V-105	(RELIEF VALVE - AIR) BRASS - ASTM B16	521FEBZMX1	CONBRACO INDUSTRIES	None Available; send to test shop or replace	NA	2 (2)
GAUGES						
GAUGE N0.	**DESCRIPTION**	**PART NUMBER**	**MANUFACTURER**	**SOFTWARE KIT**	**INITIAL ONBOARD SPARES**	**QTY AT ESSM BASE**
ALP-G-101 ALP-G-104	GAUGE, PRESSURE 2.5" DIA, 0-600 PSI, AIR	25502-28B31 MCD	3D INSTRUMENTS	2.5" Acrylic Crystal for ABS Case (3045-0005) 2.5" Snap Ring (2167-0009) 1/16" Diameter Neoprene Crystal Gasket Per Foot – 0.5 Feet (2074-0006-1)	NA	2 (2)

Footnotes:

(1) Software Kit
(2) Hardware Assembly

Downloaded from http://www.everyspec.com

Table C-5. Spare Parts for HP Air Reducing Station (contd)

GAUGES (CONTD)						
GAUGE N0.	**DESCRIPTION**	**PART NUMBER**	**MANUFACTURER**	**SOFTWARE KIT**	**INITIAL ONBOARD SPARES**	**QTY AT ESSM BASE**
AHP-G-102 AHP-G-103	GAUGE, PRESSURE 2.5" DIA, 0-8000 PSI, AIR	25502-37B31 MCD	3D INSTRUMENTS	2.5" Acrylic Crystal for ABS Case (3045-0005) 2.5" Snap Ring (2167-0009) 1/16" Diameter Neoprene Crystal Gasket Per Foot – 0.5 Feet (2074-0006-1)	NA	2 (2)
FILTERS						
ITEM N0.	**DESCRIPTION**	**PART NUMBER**	**MANUFACTURER**	**SOFTWARE KIT**	**INITIAL ONBOARD SPARES**	**QTY AT ESSM BASE**
F-116	FILTER R-108, R-109	U-956	NORMAN FILTERS	Seal Kit (43-4412-18)	NA	NA
F-116	FILTER ELEMENT FOR U-956	412G-18ABS	NORMAN FILTERS		1	NA
O-RINGS						
ITEM N0.	**DESCRIPTION**	**PART NUMBER**	**MANUFACTURER**	**SOFTWARE KIT**	**INITIAL ONBOARD SPARES**	**QTY AT ESSM BASE**
NA	VITON O-RING (MIL-R-83248 TYPE 1 CLASS 2)	M83248/2-005	COMMERCIAL		5	NA
7539552-29	VITON O-RING (MIL-R-83248 TYPE 1 CLASS 2)	M83248/2-916	COMMERCIAL		5	NA
7539552-30	VITON O-RING (MIL-R-83248 TYPE 1 CLASS 2)	M83248/2-008	COMMERCIAL		5	NA

Footnote:

(2) Hardware Assembly

Table C-5. Spare Parts for HP Air Reducing Station (contd)

O-RINGS (CONTD)						
ITEM N0.	**DESCRIPTION**	**PART NUMBER**	**MANUFACTURER**	**SOFTWARE KIT**	**INITIAL ONBOARD SPARES**	**QTY AT ESSM BASE**
7539552-30	VITON O-RING (MIL-R-83248 TYPE 1 CLASS 2) (O_2 SERVICE)	M83248/2-008	COMMERCIAL		5	NA
7539552-31	VITON O-RING (MIL-R-83248 TYPE 1 CLASS 2)	M83248/2-010	COMMERCIAL		5	NA
7539552-31	VITON O-RING (MIL-R-83248 TYPE 1 CLASS 2) (O_2 SERVICE)	M83248/2-010	COMMERCIAL		5	NA
7539552-33	VITON O-RING (MIL-R-83248 TYPE 1 CLASS 2)	M83248/2-022	COMMERCIAL		5	NA
7539552-34	VITON O-RING (MIL-R-83248 TYPE 1 CLASS 2)	M83248/2-217	COMMERCIAL		5	NA
7539552-35	VITON O-RING (MIL-R-83248 TYPE 1 CLASS 2)	M83248/2-904	COMMERCIAL		5	NA
7539552-35	VITON O-RING (MIL-R-83248 TYPE 1 CLASS 2) (O_2 SERVICE)	M83248/2-904	COMMERCIAL		5	NA
7539552-36	VITON O-RING (MIL-R-83248 TYPE 1 CLASS 2)	M83248/2-908	COMMERCIAL		5	NA
7539552-36	VITON O-RING (MIL-R-83248 TYPE 1 CLASS 2) (O_2 SERVICE)	M83248/2-908	COMMERCIAL		5	NA
7539552-37	VITON O-RING (MIL-R-83248 TYPE 1 CLASS 2)	M83248/2-912	COMMERCIAL		5	NA

Items printed in green receive O_2 service.

Downloaded from http://www.everyspec.com

Downloaded from http://www.everyspec.com

THIS PAGE INTENTIONALLY LEFT BLANK

Downloaded from http://www.everyspec.com

Ref: NAVSEAINST 4160.3A NAVSEA S0005-AA-GYD-030/TMMP

NAVSEA/SPAWAR TECHNICAL MANUAL DEFICIENCY/EVALUATION REPORT (TMDER)

INSTRUCTIONS: Continue on 8 ½" x 11" page if additional space is needed.
1. Use this report to indicate deficiencies, problems and recommendations relating to publications.
2. For CLASSIFIED TMDERs see OPNAVINST 5510H for mailing requirements.
3. For TMDERs that affect more than one publication, submit a separate TMDER for each.
4. Submit TMDERs at web site http://nsdsa.phdnswc.navy.mil or mail to: **COMMANDER, CODE 310 TMDER BLDG 1388, NAVSURFWARCENDIV NSDSA, 4363 MISSILE WAY, PORT HUENEME CA 93043-4307**

1. PUBLICATION NUMBER	2. VOL/PART	3. REV/DATE OR CHG/DATE	4. SYSTEM/EQUIPMENT ID
SS500-B1-MMO-010		Change A, 1 December 2007	

5. TITLE OF PUBLICATION	6. REPORT CONTROL NUMBER (6 digit UIC-YY-any four: xxxxxx-03-xxxx)
Standard Navy Double-Lock Recompression Chamber System Technical Manual	

7. RECOMMEND CHANGES TO PUBLICATION

7a. Page #	7b. Para #	7c. RECOMMENDED CHANGES AND REASONS

8. ORIGINATOR'S NAME AND WORK CENTER	9. DATE	10. ORIGINATOR'S E-MAIL ADDRESS	11. TMMA of Manual (NSDSA will complete)

12. SHIP OR ACTIVITY Name and Address (Include UIC/CAGE/HULL)	13. Phone Numbers:
	Commercial (___) ___-_____ DSN ___-_____ FAX (___) ___-_____

Downloaded from http://www.everyspec.com

DEPARTMENT OF THE NAVY
OFFICIAL BUSINESS
PENALTY FOR PRIVATE USE, $300

PLACE
POSTAGE
HERE

FIRST CLASS MAIL

COMMANDER
NAVAL SURFACE WARFARE CENTER DIVISION
CODE 5B31, BLDG. 1388
4363 MISSILE WAY
PORT HUENEME, CA 93043-4307

FOLD HERE

Downloaded from http://www.everyspec.com

Ref: NAVSEAINST 4160.3A NAVSEA S0005-AA-GYD-030/TMMP

NAVSEA/SPAWAR TECHNICAL MANUAL DEFICIENCY/EVALUATION REPORT (TMDER)

INSTRUCTIONS: Continue on 8 ½" x 11" page if additional space is needed.
1. Use this report to indicate deficiencies, problems and recommendations relating to publications.
2. For CLASSIFIED TMDERs see OPNAVINST 5510H for mailing requirements.
3. For TMDERs that affect more than one publication, submit a separate TMDER for each.
4. Submit TMDERs at web site http://nsdsa.phdnswc.navy.mil or mail to: **COMMANDER, CODE 310 TMDER BLDG 1388, NAVSURFWARCENDIV NSDSA, 4363 MISSILE WAY, PORT HUENEME CA 93043-4307**

1. PUBLICATION NUMBER	2. VOL/PART	3. REV/DATE OR CHG/DATE	4. SYSTEM/EQUIPMENT ID
SS500-B1-MMO-010		Change A, 1 December 2007	

5. TITLE OF PUBLICATION	6. REPORT CONTROL NUMBER (6 digit UIC-YY-any four: xxxxxx-03-xxxx)
Standard Navy Double-Lock Recompression Chamber System Technical Manual	

7. RECOMMEND CHANGES TO PUBLICATION

7a. Page #	7b. Para #	7c. RECOMMENDED CHANGES AND REASONS

8. ORIGINATOR'S NAME AND WORK CENTER	9. DATE	10. ORIGINATOR'S E-MAIL ADDRESS	11. TMMA of Manual (NSDSA will complete)

12. SHIP OR ACTIVITY Name and Address (Include UIC/CAGE/HULL)	13. Phone Numbers:
	Commercial (___) ___-_____ DSN ___-_____ FAX (___) ___-_____

Downloaded from http://www.everyspec.com

DEPARTMENT OF THE NAVY
OFFICIAL BUSINESS
PENALTY FOR PRIVATE USE, $300

PLACE
POSTAGE
HERE

FIRST CLASS MAIL

COMMANDER
NAVAL SURFACE WARFARE CENTER DIVISION
CODE 5B31, BLDG. 1388
4363 MISSILE WAY
PORT HUENEME, CA 93043-4307

FOLD HERE

Downloaded from http://www.everyspec.com

Ref: NAVSEAINST 4160.3A NAVSEA S0005-AA-GYD-030/TMMP

NAVSEA/SPAWAR TECHNICAL MANUAL DEFICIENCY/EVALUATION REPORT (TMDER)

INSTRUCTIONS: Continue on 8 ½" x 11" page if additional space is needed.
1. Use this report to indicate deficiencies, problems and recommendations relating to publications.
2. For CLASSIFIED TMDERs see OPNAVINST 5510H for mailing requirements.
3. For TMDERs that affect more than one publication, submit a separate TMDER for each.
4. Submit TMDERs at web site http://nsdsa.phdnswc.navy.mil or mail to: **COMMANDER, CODE 310 TMDER BLDG 1388, NAVSURFWARCENDIV NSDSA, 4363 MISSILE WAY, PORT HUENEME CA 93043-4307**

1. PUBLICATION NUMBER	2. VOL/PART	3. REV/DATE OR CHG/DATE	4. SYSTEM/EQUIPMENT ID
SS500-B1-MMO-010		Change A, 1 December 2007	

5. TITLE OF PUBLICATION	6. REPORT CONTROL NUMBER (6 digit UIC-YY-any four: xxxxxx-03-xxxx)
Standard Navy Double-Lock Recompression Chamber System Technical Manual	

7. RECOMMEND CHANGES TO PUBLICATION

7a. Page #	7b. Para #	7c. RECOMMENDED CHANGES AND REASONS

8. ORIGINATOR'S NAME AND WORK CENTER	9. DATE	10. ORIGINATOR'S E-MAIL ADDRESS	11. TMMA of Manual (NSDSA will complete)

12. SHIP OR ACTIVITY Name and Address (Include UIC/CAGE/HULL)	13. Phone Numbers:
	Commercial (___) ___-_____ DSN ___-_____ FAX (___) ___-_____

Downloaded from http://www.everyspec.com

DEPARTMENT OF THE NAVY
OFFICIAL BUSINESS
PENALTY FOR PRIVATE USE, $300

PLACE
POSTAGE
HERE

FIRST CLASS MAIL

COMMANDER
NAVAL SURFACE WARFARE CENTER DIVISION
CODE 5B31, BLDG. 1388
4363 MISSILE WAY
PORT HUENEME, CA 93043-4307

FOLD HERE