Downloaded from http://www.everyspec.com

MCWP 2-26 (formerly MCWP 2-12.1)

Geographic Intelligence

U.S. Marine Corps

6 July 2000

PCN 143 000067 00

Downloaded from http://www.everyspec.com

MCCDC (C 42)
13 Jul 2004

E R R A T U M

to

MCWP 2-26

GEOGRAPHIC INTELLIGENCE

1. Change the publication short title to read "MCWP 2-26" (vice MCWP 2-12.1).

PCN 143 000067 80

Downloaded from http://www.everyspec.com

DEPARTMENT OF THE NAVY
Headquarters United States Marine Corps
Washington, DC 20380-1775

6 July 2000

FOREWORD

Marine Corps Doctrinal Publication 2, *Intelligence*, and Marine Corps Warfighting Publication (MCWP) 2-1, *Intelligence Operations*, provide the doctrine and higher order tactics, techniques, and procedures for intelligence operations. MCWP 2-12.1, *Geographic Intelligence*, complements and expands upon this information by detailing doctrine, tactics, techniques, and procedures for the conduct of geographic intelligence and supporting geospatial information and services operations in support of the Marine air-ground task force (MAGTF).

The primary target audience of this publication is intelligence personnel responsible for the planning and execution of geographic intelligence operations. Personnel who provide support to geographic intelligence or who use the results from these operations should also read this publication.

MCWP 2-12.1 describes aspects of geographic intelligence operations, including doctrinal fundamentals, command and control, communications and information systems support, planning, execution, equipment, security, and training. MCWP 2-12.1 provides the information Marines needed to understand, plan, and execute geographic intelligence operations in support of the MAGTF.

Reviewed and approved this date.

BY DIRECTION OF THE COMMANDANT OF THE MARINE CORPS

J. E. RHODES
Lieutenant General, U.S. Marine Corps
Commanding General
Marine Corps Combat Development Command

DISTRIBUTION: 143 000067 00

Downloaded from http://www.everyspec.com

Geographic Intelligence

Table of Contents

Page

Chapter 1 Fundamentals

1001 What is Geographic Intelligence 1-1
Geospatial Information 1-1
Geospatial Information Infrastructure 1-1
Geospatial Information and Services 1-2
Topography 1-2
Foundation Data 1-2
Mission Specific Data Set 1-3
1002 Categories of GEOINT 1-3
Strategic 1-4
Operational 1-5
Tactical 1-6
1003 Support to Intelligence Functions 1-7
Commander's Estimate 1-7
Situation Development 1-7
Force Protection 1-7
Targeting 1-7
Combat Assessment 1-7
1004 Support to Operations 1-8
Command and Control 1-8
Maneuver 1-8
Fire Support 1-9
Aviation 1-9
Logistics 1-9
1005 Multilevel GEOINT Support Operations 1-9
Marine Expeditionary Force 1-9
Marine Expeditionary Unit (Special Operations Capable) 1-10
Joint and Theater 1-10
National and Strategic Support 1-10
1006 GEOINT Cycle 1-10
Planning and Direction 1-11
Collection 1-11
Processing and Exploitation 1-12
Production 1-12
Dissemination 1-13
Utilization 1-13

Chapter 2 Organizations and Responsibilities

2001 Geospatial Information and Services 2-1
Marine Corps Geospatial Information Management Office 2-1
Marine Corps Forces, GI&S Section 2-2

Downloaded from http://www.everyspec.com

MEF CE, G-2 Division, Imagery and Mapping Section 2-3
Major Subordinate Commands 2-5
2002 Geographic Intelligence 2-5
Key MEF Intelligence Staff Planning and Direction Responsibilities 2-5
Key GEOINT Producers Responsibilities 2-12
2003 National Support 2-15
National Imagery and Mapping Agency 2-15
Marine Corps Customer Support Team, NIMA 2-16
NIMA Customer Liaison Officer 2-16
NIMA Geospatial Technical Representatives 2-17

Chapter 3 Planning

Section I. Planning Process

3101 Marine Corps Planning Process 3-1
Mission Analysis 3-1
COA Development 3-1
COA(S) War Game 3-2
COA Comparison and Decision 3-2
Orders Development 3-2
Transition 3-2
3102 Joint Planning Processes 3-2
Joint Deliberate Planing 3-2
Crisis Action Planning 3-3
3103 Roles of GI and GEOINT in the MCPP 3-3
3104 GEOINT Planning Considerations 3-4
Essential Elements of Terrain Information 3-4
Coordination Requirements 3-4
Position and Navigation 3-4
Preferred Geodetic Datum 3-5
Global Positioning Systems 3-5
Product Accuracy 3-5

Section II. Support to the Planning Process

3201 Deliberate Planning 3-6
Initiation 3-6
Concept Development 3-7
Plan Development 3-7
Plan Review 3-8
Supporting Plans 3-8
3202 Crisis Action Planning 3-9
Situation Development 3-9
Crisis Assessment 3-10
COA Development 3-10
COA Selection 3-10
Execution Planning 3-11
Execution 3-11
3203 Collection Planning 3-12
3204 Processing, Exploitation, and Production Planning 3-12
3205 Dissemination Planning 3-12

Downloaded from http://www.everyspec.com

Section III. GI and GEOINT to Support Planning

3301 Geospatial Foundation Data 3-14
Digital Terrain Elevation Data, Level 2 3-14
Digital Bathymetric Data Base 3-14
Foundation Feature Data 3-14
Controlled Image Base 3-14
Digital Point Positioning Data Base 3-14
Qualified Data 3-15
3302 Geographic Intelligence 3-15
Intelligence Preparation of the Battlespace 3-15
Modified Combined Obstacles Overlay 3-17

Chapter 4 Geographic Intelligence Operations

4001 MAGTF GI&S Support 4-2
Staff Coordination 4-2
User Profile Development 4-2
Mission Profile Development 4-3
Requirements Identification 4-3
Production Prioritization 4-3
Data Base Management 4-3
Dissemination Management 4-3
4002 Topographic Platoon Support 4-4
Mission and Tasks 4-4
Mission Effectiveness Criteria 4-4
Command and Control 4-5
Concept of Employment and Task Organization 4-6
Distribution and Production Systems 4-6
Communications and Information Systems Configurations 4-7
4003 MCIA Support 4-8
4004 Geospatial Analysis Branch Support 4-8
4005 National Production Network Support 4-9
4006 Support to MAGTF Operations 4-10
Operational Maneuver From the Sea 4-10
Sustained Operations Ashore 4-10
Military Operations on Urbanized Terrain 4-11
4007 Predeployment Requirements 4-11
Planning Requirements 4-11
Product Requirements 4-12
4008 Operations Support Requirements 4-14
Query Requirements 4-14
Retrieval Requirements 4-14
Integration Requirements 4-14
Deconfliction Requirements 4-14
Intensification Requirements 4-15
Analysis Requirements 4-15
Production Requirements 4-15
Storage Requirements 4-15
Dissemination Requirements 4-16

Downloaded from http://www.everyspec.com

Chapter 5 Communications and Information Systems

5001 Communications and Information System Requirements 5-1
Capability to Command and Control Subordinate Topographic Units 5-1
Ability to Receive Collected GI Data and Information 5-2
Ability to Provide GEOINT Products 5-2
5002 Support to Command and Control Nodes 5-2
MEF Command Element Intelligence C2 Nodes—Combat Intelligence Center and Intelligence Operations Center 5-2
GEOINT CIS Support 5-5
5003 Joint Communications and Information Systems 5-11
Planning 5-11
Mission Objectives 5-12
CIS Plans 5-12
5004 MAGTF Communications and Information Systems 5-12
Architecture Planning 5-12
System Planning 5-12
Planning Considerations 5-13
5005 United States Imagery and Geospatial Information System 5-13
5006 Marine Corps Planning Factors Data Base 5-14
5007 Operations and Supporting Communications and Information Systems 5-14

Chapter 6 Security

6001 Responsibilities 6-1
6002 Classification 6-1
6003 Classification Guidance for New GI and GEOINT 6-1
GI&S Products and Data Base 6-2
Guide Preparation Considerations 6-2
6004 Disclosure and Release of NIMA Classified Products and Data Bases 6-3
NIMA Policy 6-3
Disclosure Procedures 6-3
Release of NIMA Classified Material 6-3
6005 Release of NIMA Unclassified Products and Data Bases 6-3
Release Categories 6-3
Release Guidance 6-4
6006 Disposal of GI&S Products and Data Bases 6-4
Disposal of Classified Products and Data Bases 6-4
Disposal of Unclassified Products and Data Bases 6-4

Chapter 7 Training

7001 Organic Topographic Training 7-1
Requirements 7-1
Training Objectives 7-1
Orientation and Familiarization Training 7-1
Planning and Employment Training 7-2
MAGTF Training 7-2
7002 Training Courses 7-2
Basic Level 7-3
Advanced Level 7-4

Downloaded from http://www.everyspec.com

Appendices

A	Geographic Intelligence Products and Reports	A-1
B	Geographic Intelligence Points of Contact	B-1
C	GI&S and GEOINT Tasks	C-1
D	Topographic Production Capability	D-1
E	GEOINT Estimate	E-1
F	GI&S Planning Activities	F-1
G	Geospatial Information and Services Annex to Operation Plans and Orders	G-1
H	Tactical Study of the Terrain	H-1
I	Beach Studies	I-1
J	Helicopter Landing Zone and Drop Zone Studies	J-1
K	GEOINT Production Report Sample Format	K-1
L	Marine Corps Systems Requiring GI&S Support	L-1
M	Geographic Intelligence Unit Annual Training Plan	M-1
N	Glossary	N-1
O	Bibliography and References	O-1

Downloaded from http://www.everyspec.com

Chapter 1

Fundamentals

MCWP 2-12.1 provides higher order tactics, techniques, and procedures in the use and production of geographic intelligence (GEOINT). The purpose of GEOINT is to present fused data about terrain, inland and coastal water, climate, and weather in intelligence products. These products help commanders increase their battlespace situational awareness and make decisions.

When planning an operation, the commander and staff use GEOINT to help analyze the effects that terrain, coasts and waterways, and climatic conditions will have on the activities and capabilities of friendly and enemy forces. With highly accurate and pertinent GEOINT, Marine air-ground task forces (MAGTFs) will be better able to exploit the advantages of the terrain and avoid or minimize its unfavorable aspects.

1001. What is Geographic Intelligence?

GEOINT is the process of collecting, organizing, analyzing, synthesizing, disseminating, and using all-source geospatial and other intelligence information with regard to the military aspects of the terrain in support of MAGTF operations. GEOINT can include cross-country movement (CCM) studies, line of sight (LOS) analysis, natural and manmade obstacles, and various terrain studies (e.g., road, railroad, airfield, bridges, ports, helicopter landing zones). The GEOINT analysis focuses on intelligence preparation of the battlespace (IPB) and addresses key terrain, observation and fields of fire, cover and concealment, obstacles, and avenues of approach (KOCOA) to help answer MAGTF intelligence requirements (IRs). This analysis includes intensification or verification of current information from new sources and clarification of detail and resolution to meet tactical requirements.

a. Geospatial Information

Geospatial information (GI) is precise, spatially-referenced information about the Earth with temporal tags arranged in a coherent structure and format to support measurement, mapping, monitoring, modeling, spatial reasoning applications, and terrain evaluation.

Digital GI forms the foundation for MAGTF battlespace visualization. All military operations require GI to provide the necessary framework on which all other relevant strategic, operational, and tactical information is layered and subsequent planning and decisionmaking is based.

b. Geospatial Information Infrastructure

To understand and exploit GEOINT, the Marine Corps must implement and sustain a geospatial information infrastructure (GII) that is interoperable with and supports joint and Service policies and doctrine; operational, system, and technical architectures; data standards and specifications; equipment technologies; and personnel, to include their training and education. (See figure 1-1.) The Marine Corps GII develops, implements, and sustains a collaborative production environment to support global expeditionary missions. It also

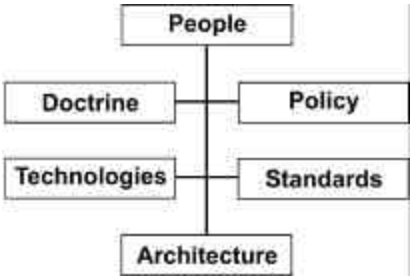

Figure 1-1. Geospatial Information Infrastructure.

Downloaded from http://www.everyspec.com

provides responsive access to the national intelligence production network to support Service, joint, and multinational operations.

c. Geospatial Information and Services

The terms GI and geospatial information and services (GI&S) replace mapping, charting, and geodesy (MC&G) to reflect the increasing need for digital geospatial data for command and control (C2) systems, intelligence systems, communications and information systems (CIS), weapons systems, and high-end geographic information systems. While the Department of Defense (DOD) is transitioning from one term to the other, the term GI&S is being used to describe the functions and data associated with GI and GEOINT. GI&S defines the concept for collection, information extraction, storage, exploitation, and dissemination of geodetic, geomagnetic, imagery, gravimetric, aeronautical, topographic, hydrographic, littoral, cultural, and toponymic data accurately referenced to a precise location on the Earth's surface (see figure 1-2). GI&S encompasses multiple functions as well as GI data.

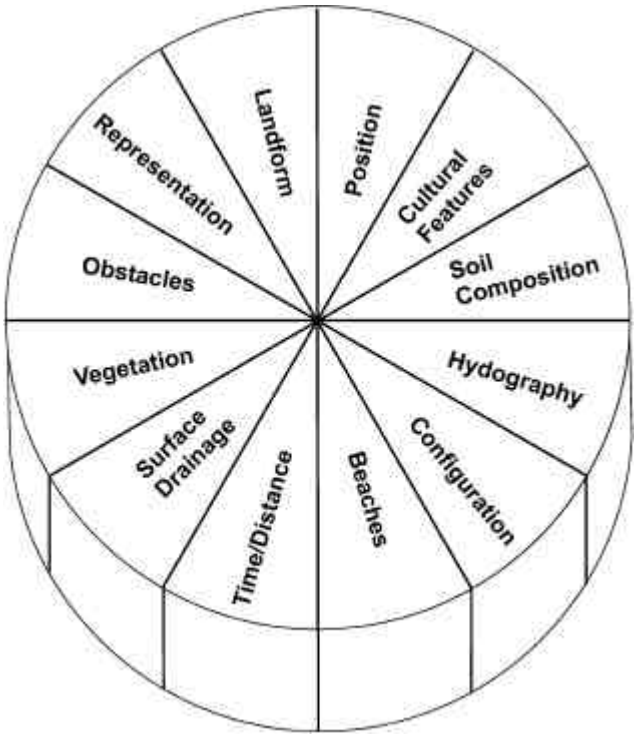

Figure 1-2. Geospatial Information and Services.

These functions include—

- Defining requirements for training, exercises, and operations.
- Providing a command and Service focal point for GI&S expertise and consultation.
- Coordinating force and staff GI&S products, data sets, prototypes, as well as specification and standards developed and produced by the National Imagery and Mapping Agency (NIMA).
- Providing guidance and coordination to the GEOINT and broader intelligence cycles.

GI&S is the center of GI and GEOINT production. A traditional NIMA map is GI&S, but may also be considered a basic form of GEOINT. GEOINT production will use maps and other information and intelligence sources to produce specialized intelligence tailored to a specific requirement, mission, force, and weapon system. The GEOINT cycle depends on both the data and the functionality of GI&S to provide the commander and forces GI in the refined form of GEOINT.

d. Topography

Topography is defined as the configuration of the ground to include its relief and all features. Topography addresses both dry land and the sea floor (underwater topography).

e. Foundation Data

Foundation data (FD) is a seamless, integrated geospatial data base consisting primarily of elevation data, map feature data, and imagery predominantly at a medium equivalency of resolution (similar to a 1:250,000 scale chart). See figure 1-3.

FD forms the base of a geospatial framework from which all additional data is referenced and is one of the principal components of the DOD GI&S readiness strategy designed to meet joint and MAGTF requirements. FD is relatively stable generic information that is mission and force independent, specification compliant, and geopositioned to the World Geodetic System

Downloaded from http://www.everyspec.com

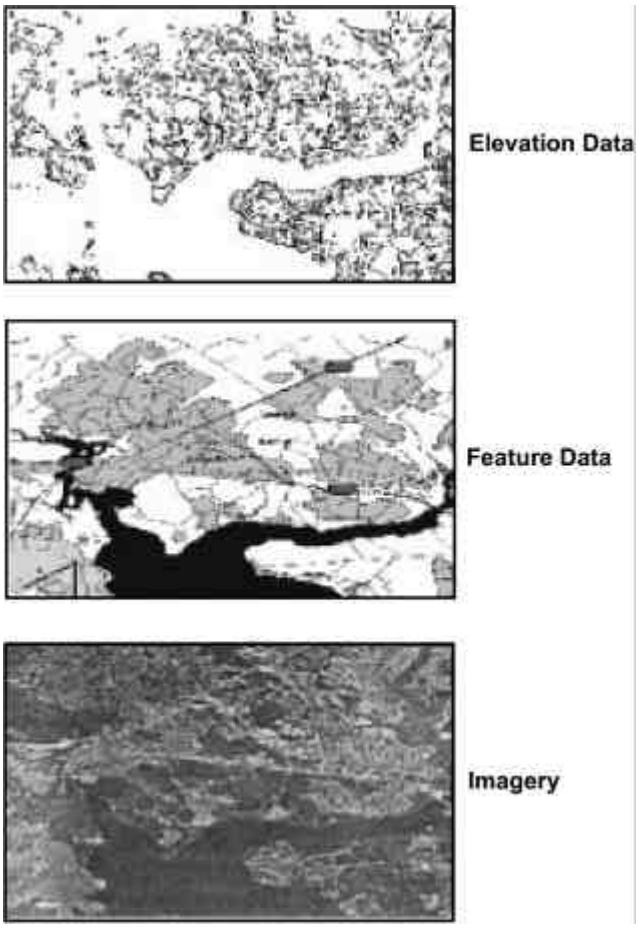

Figure 1-3. Foundation Data.

1984 (WGS-84) datum. The primary focus of FD is to support initial planning and to establish the framework for intensification of data within the objective area necessary to support specific operations.

f. Mission Specific Data Set

Mission specific data set (MSDS) is any user-defined enhancement of FD required to conduct a mission. MSDS is focused on a specific mission, operating area, and type force. It is developed by enhancing the information contained in the foundation data set and includes higher resolution controlled imagery, elevation and/or bathymetric depth information, and vector features (i.e., point, line or polygon) needed to meet a defined mission (see figure 1-4 on page 1-4). Within the MAGTF, the MSDS is managed, manipulated, and maintained by the topographic platoon with each Marine expeditionary force's (MEF's) intelligence battalion (intel bn).

1002. Categories of GEOINT

GEOINT provides the detailed framework critical for operations within the littorals. All phases of operation are influenced by environmental conditions. The conduct of operations requires detailed studies of the littorals, terrain, inland and coastal hydrography, weather, and environmental factors. GEOINT for amphibious operations includes depths, beach gradients, composition, and locations of natural and manmade obstacles. The ability to rapidly integrate, deconflict, and create a seamless framework for visualization is essential for coordination between forces, supporting fires, and other forces within the area of operations (AO). (See figure 1-5 on page 1-5.)

Terrain, inland and coastal water, climate, and weather factors are so interrelated that they must be considered together when planning ground, air, and logistics operations. Weather elements are capable of drastically altering terrain features and trafficability. Conversely, terrain features, such as mountains and ridge lines, exert influence on local weather and oceanographic elements. This relationship of terrain, oceanography, and weather must be carefully correlated in all operations to ensure an accurate description of environmental impacts to mission success. GEOINT supports every phase of a military operation and must be considered during each phase to limit potential environmental impacts to friendly forces, while exploiting potential impacts to enemy forces.

GEOINT is categorized according to the mission and the level of command at which it is used. These categories are strategic, operational, and tactical. The commander's and planner's objectives determine the GEOINT category and support required. The strategic planner may consider an entire country or continent, while the tactical planner is concerned primarily with the terrain in the area of operations (AO). The strategic planner

Downloaded from http://www.everyspec.com

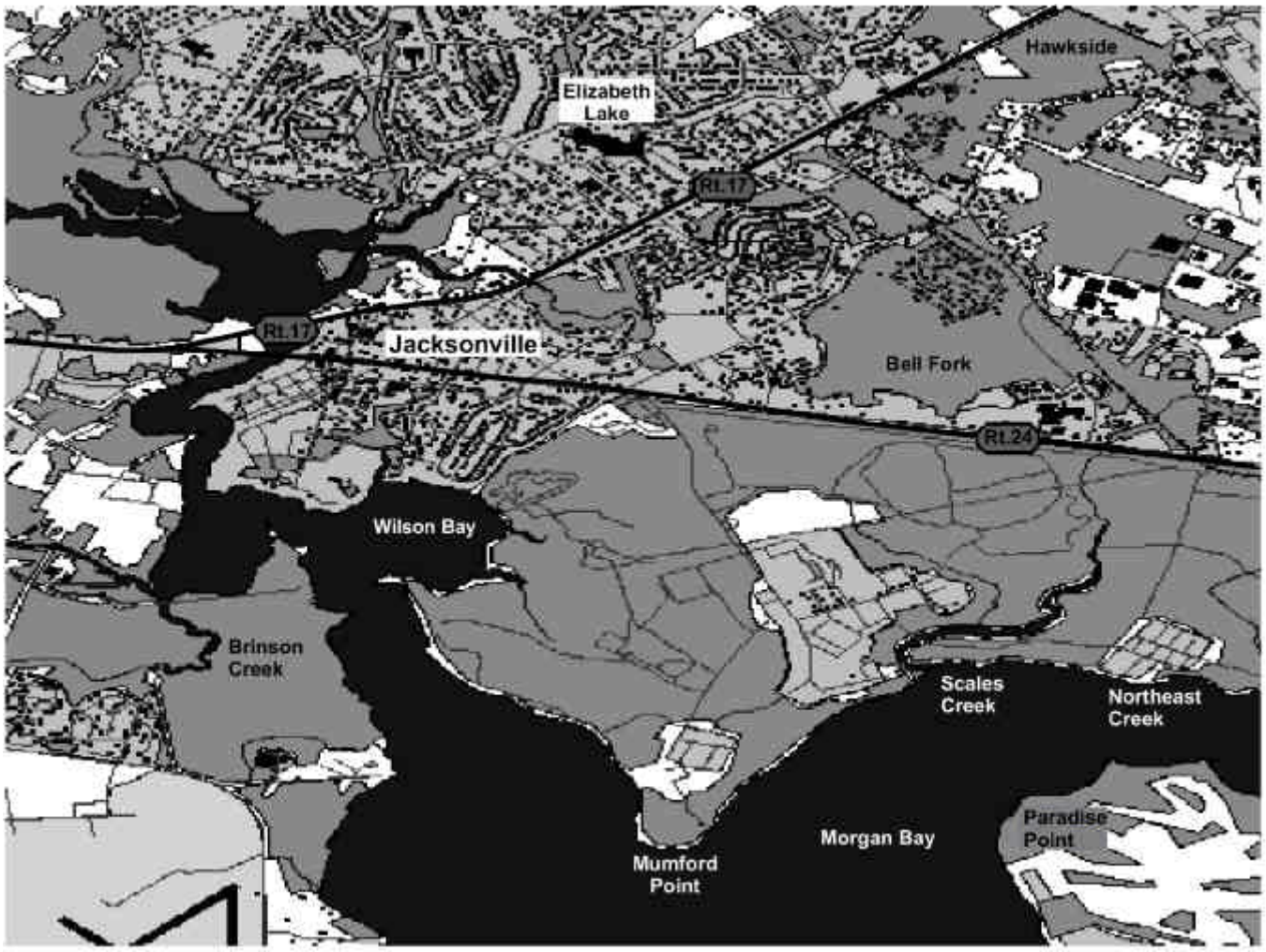

Figure 1-4. Mission Specific Data Set.

often studies problems that may arise some years ahead and applies GEOINT in a wide variety of hypothetical situations. Operational and tactical planners are mostly engaged with missions and problems that currently involve their units and studying the geographic and terrain factors in their entire AO and interest.

a. Strategic

Strategic GEOINT concerns national and theater plans that include the military capabilities of nations. Strategic GEOINT is produced continuously and requires the compilation and interpretation of information by specialized GEOINT personnel. Strategic GEOINT analysis is normally keyed to small-scale or low-density source equivalents (e.g., 1:1,000,000 or smaller scale maps) to support an entire country or regional area.

Strategic GEOINT includes macro descriptions and analyses of—

- Beaches, ports and facilities, inland waterways, urban areas, and other major terrain features.
- Transportation and communication systems.
- Types of soils and rocks.
- Underground installations.
- Climate.
- Vegetation.
- Hydrography.

Downloaded from http://www.everyspec.com

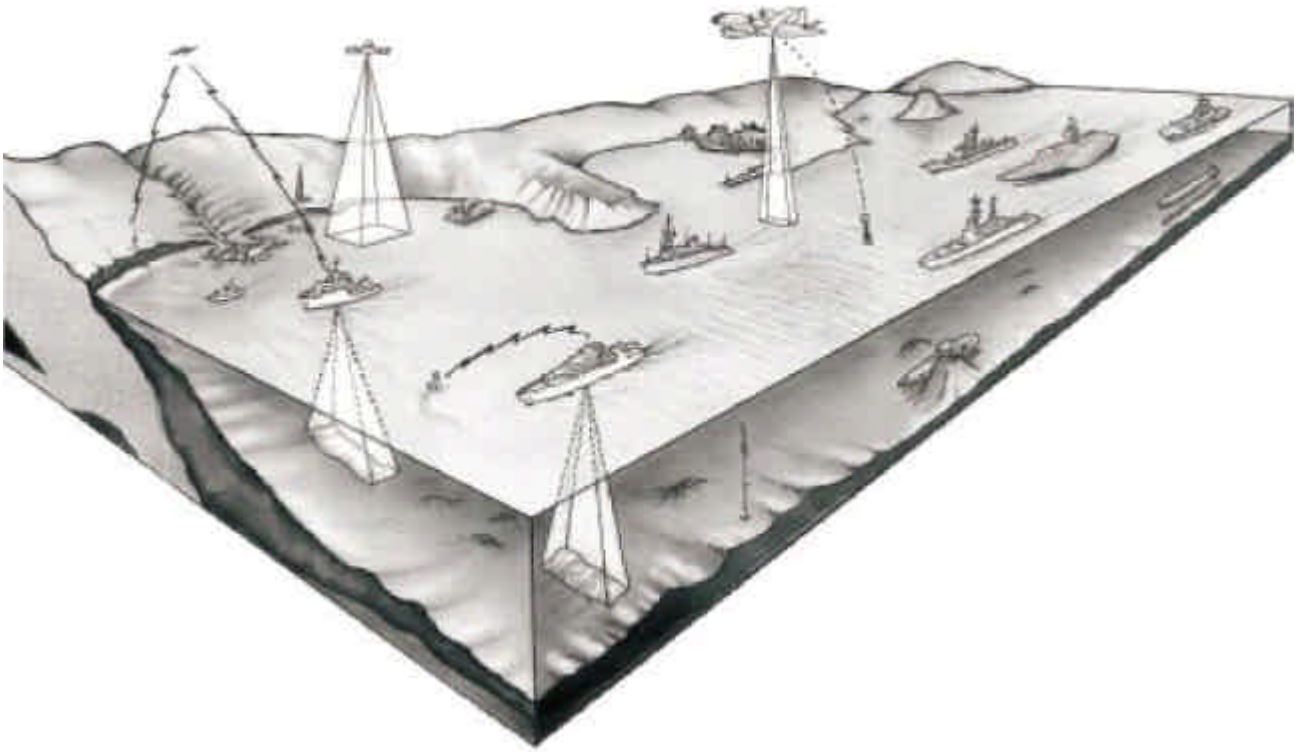

Figure 1-5. GEOINT View of the Littorals.

(1) Capabilities

Strategic GEOINT provides broad coverage of information over countries and regions. It focuses primarily on helping develop the broad situational awareness to support the National Command Authorities (NCA) and the combatant commands' commanders in chief (CINCs). Strategic GEOINT based on FD provides a stable base for intelligence intensification. This helps ensure a common operational view of the battlespace across the political, theater, and military spectrums.

(2) Limitations

The primary limitation to strategic GEOINT is that the resolution and density of information is not high enough to support detailed planning of tactical operations. Strategic GEOINT is directed to the macro-relief within an entire country and will not provide the critical, focused information necessary to support lower command echelon operations.

b. Operational

Operational GEOINT is produced for use at the combatant command, joint task force (JTF), Service component commands, and MAGTF command elements (CEs). Operational GEOINT is fluid and requires the compilation and interpretation of information by specialized GEOINT personnel within the joint intelligence centers (JICs), joint analysis centers (JACs), and Service intelligence centers. Normally focusing on the theater of operations, operational GEOINT is concerned primarily with the effects of weather, enemy, and terrain (WET) on mission accomplishment. Operational GEOINT includes information derived from strategic analysis, but focuses more attention on detailed support for large military forces within the theater of operations. It includes detailed analysis and production on—

- Landing areas and sites.
- Inland waterways.

Downloaded from http://www.everyspec.com

- Urban environments.
- Transportation and communication systems.
- Climatic, terrain, and hydrographic effects on potential courses of action (COAs) within the theater of operations.

Operational GEOINT is used for planning and coordinating missions within a theater and is based on information from all-source national, theater, and other intelligence assets. Operational GEOINT support can be focused on several different types of missions, units, and weapon systems occurring at the same time within the commander's area of responsibility (AOR). Normally, operational analysis is keyed to small-scale or low-density source equivalents (e.g., 1:500,000 or smaller scale maps) supporting an entire theater of operations.

(1) Capabilities

Operational GEOINT is produced for use by JTF headquarters (HQ), component commands, and, to some extent, the MEF CE during IPB activities. Within a MAGTF, normally GEOINT focuses on the MAGTF's area of interest (AOI) and supports the integration and analysis of WET effects on MAGTF plans and capabilities. Operational GEOINT includes information derived from strategic analysis, but it focuses more attention on detailed support for large maneuver and other forces (i.e., division, wing, service support) within the AOI. Operational GEOINT support can be focused on several different missions, units, and weapon systems operating at the same time within the commander's AOR.

(2) Limitations

As with strategic GEOINT, the major limitation of operational GEOINT is the resolution and density of information. It is focused on a large area (e.g., theater of war), and the data content is not high enough to support lower echelons' detailed planning, operations, and IRs. Operational GEOINT is directed to the macro-relief and may include limited evaluation of specified beaches, landing zones, airfields, and road networks. It will not provide the critical information necessary to support infantry and artillery regiments, Marine aircraft groups, combat service support detachments, and smaller operations.

c. Tactical

Tactical GEOINT is produced from information collected locally and information provided by higher headquarters. It is concerned primarily with the effects of climate, terrain, and/or the littoral environment on the operations of the MAGTF within a specific AO. Tactical GEOINT is used in planning, coordinating, and conducting tactical or other operations within the MAGTF AO. At a MEF level, staff planners focus normally on the AOR at a 1:250,000 scale equivalent and with appropriate data density (although 1:50,000 and 1:100,000 scale products are needed for specific requirements), while their major subordinate commands (MSCs) require greater detail of analysis to support mission requirements.

Tactical GEOINT analysis and production include information from the operational level and provide greater detail based on imagery and local all-source intelligence collection and production activities. Tactical GEOINT is concerned primarily with the effects of the environment on a particular mission, unit, and/or weapon system. Specific products may include CCM analysis, lines of communication (LOC) analysis, and more focused evaluation on the logistical support requirements of commanders (i.e., staging areas and depot sites within the AO). Normally, tactical GEOINT is keyed to medium- or large-scale source equivalents and data density (i.e., 1:100,000 and larger scale maps) to support a specific mission or operation.

(1) Capabilities

Tactical GEOINT concerns the effects of climate, terrain, and/or the littoral environment on specific operations of the MAGTF. Tactical analysis for each mission focuses on intensifying and integrating GI from all geospatial sources and value-adding of local all-source intelligence. Primarily, tactical GEOINT concerns effects of the

Downloaded from http://www.everyspec.com

environment on a particular mission, unit, and/or weapon system.

(2) Limitations

Tactical GEOINT's most significant limitation is the time necessary to collect, integrate, process, and analyze the data for each mission to produce tailored, focused GEOINT products to support MAGTF IRs. In addition, it is limited by the CIS available to disseminate and use these products at lower echelons to support mission planning and execution.

1003. Support to Intelligence Functions

During deliberate planning, GI and GEOINT provide the initial geospatial framework to support battlespace visualization of the AOI. They help planners develop their COAs and assess the enemy's COAs based on potential environmental conditions within the AOI. During crisis planning, the FD allows planners to initiate planning while topographic Marines accelerate the GEOINT production and intensification processes to provide the MSDS required for MAGTF mission execution.

a. Commander's Estimate

The primary function of GEOINT when supporting the commander's estimate of the situation is ensuring the intensification, value-adding, and analysis of environmental features (to include meteorological effects) within the IPB process and the Marine Corps planning process (MCPP). This provides the geospatial framework to support the commander's visualization of the battlespace.

After GI is analyzed with respect to military aspects of the terrain, it can be fused with other intelligence and other functional information to support the commander's battlespace situational awareness, planning, and decisionmaking needs. This dominant view of the area in which MAGTFs conduct operations allows commanders at all levels to anticipate or react quickly to evolving situations.

b. Situation Development

As potential trouble spots develop, topographic units use indications and warning (I&W) to provide lead time in collection of information and integration of terrain studies, ensuring the geospatial framework is available to support MAGTF planning. With the ability to query and pull geospatial data and refined GEOINT from the national distributed production network, MAGTF topographic assets can provide an initial data base to support planning and situational awareness during the development of a situation.

c. Force Protection

GEOINT provides high-resolution analysis and MSDS to support maneuver, engineering, barrier, and rear area operations planning with detailed GI. This geospatial data base is also focused on the unique missions associated with rear area security and supports the identification of ingress and egress routes, defensive barrier support using natural and manmade features, and identification of potential obstacles for reinforcement or mobilization plans.

d. Targeting

The imagery segment of FD provides high-resolution, orthorectified and georectified, stereoscopic imagery for accurate identification and location of potential targets within the area of operations. Analysis of the surrounding environment provides potential air and ground ingress and egress routes and support evaluation of all military aspects of the terrain that could affect weapon delivery systems.

e. Combat Assessment

The IPB process integration of WET is critical for situational awareness, COA development, identification of high-value targets, decision points, and tactical visualization of the battlespace. GI and GEOINT provide the framework for the integration of all assessment criteria (e.g., operations, logistics, communications) and support the rapid

Downloaded from http://www.everyspec.com

intensification and deconfliction of tactical intelligence within a target area.

1004. Support to Operations

The primary principle behind GI and GEOINT support to any MAGTF operation is the need for a common geographic reference. Air, ocean, and land environments affect the composition, deployment, employment, sustainment, and redeployment of the MAGTF. The tactical geospatial data base provides the common reference for different missions, forces or weapon systems to build a common view of the battlespace. This provides critical support to achieving the common operational picture (COP) and common tactical picture (CTP) and allows the accurate positioning of information in operational and tactical context.

GI and GEOINT help provide visualization of intelligence information in relationship to the environment, threat, and friendly forces to support IPB and the MCPP. They support the evaluation of different courses of action based on friendly and enemy capabilities and terrain limitations. The commander's evaluation of various COAs should include critical geospatial and meteorological environmental factors and impacts. These factors must be evaluated when planning operations and determining operational and tactical performance.

a. Command and Control

Command control encompasses critical support to all warfighting functions and operations. It is the means by which a commander recognizes what needs to be done and directs appropriate actions. The ability to picture and assess the battlespace, forces, weapon systems, and the interaction of the three are essential to C2.

Accurate depiction of the environment, as well as the accurate location of all entities engaged in that environment depend on the resolution level and detail of the GI and GEOINT and its integration with other intelligence. Whereas many experienced practitioners of C2 have the inherent ability to intuitively picture the battlespace, it is very difficult to convey their picture and intent without effective C2 and CIS. This requires a framework of GI and GEOINT to which specific information may be anchored. The requirement for higher levels of geospatial resolution and detail to support C2 are driving GI and GEOINT to find more efficient and effective means of providing the geospatial framework for the common operational and tactical pictures.

b. Maneuver

The connectivity and display of the C2 network directly supports maneuver operations by providing detailed, mission-essential GEOINT to operational forces. Identification of key transportation and main supply routes (MSRs) to facilitate the rapid movement of personnel and materials is critical to battlefield support. Detailed visualization of the terrain supports rapid transition of maneuver and supporting forces during amphibious operations and also supports realistic mission rehearsal during all phases of operations.

Maneuver is affected by the—

- Configuration and geometry of the Earth's surface.
- Soils, rocks, and vegetation composing that surface.
- Surface water conditions.
- Visibility.
- Wind.
- Precipitation.
- Cultural and other manmade modifications and their impacts on the Earth's physical features.

The weather effects on soil and slope must be considered. Obstacle factors include slopes that exceed the maximum a vehicle can climb and cultural modifications (e.g., ditches, fences, plowed fields, irrigation, drainage) that may alter the natural soil strength. In some areas, one factor alone may determine whether terrain is passable to vehicles, but more commonly, the combination of two or more factors determines whether vehicles

Downloaded from http://www.everyspec.com

can move across terrain with ease, with difficulty or not at all.

c. Fire Support

Accurate positioning of weapon systems, coupled with integrated GI and GEOINT, provide fire support planners with critical information needed to place rounds on target. Environmental impacts of the terrain, hydrographic, and weather elements support development of detailed descriptions of high-value targets (HVTs) and high-payoff targets (HPTs) and identify potential impacts to weapon delivery systems.

d. Aviation

GEOINT is critical to airspace analysis and can identify air avenues of approach and mobility corridors. When integrated with weather information, GEOINT helps provide the framework for determining the routes by which aircraft can enter and exit an AO. When integrated with aircraft attack profiles, GEOINT helps determine the potential aircraft approach routes to the target areas and the most effective deployment positions for air defense weapons and radars. Also, GEOINT can assist in determining the most likely positions for helicopter landing zones (HLZs), drop zones (DZs), forward arming and refueling points (FARPs), and the most likely approaches to these areas.

Through terrain-masking analysis, GEOINT helps provide the framework for mission planning systems by determining where aircraft can ingress a target while screened from enemy air defense weapons and radar. This analysis also helps determine where air defense radars and weapons are rendered ineffective by terrain and weather impacts. GEOINT helps the commander maximize battlespace air interdiction efforts and plan and counter airborne and air assault operations.

e. Logistics

One of the primary considerations in planning operations is the extent and general nature of the transportation network. Planners must consider the entire pattern of transportation infrastructure. GEOINT support to logistic operations includes the transportation infrastructure analysis of an area (i.e., road networks, railways, and waterways over which forces and supplies can be moved).

The importance of a particular facility will depend on the units involved and the type of operation. For example, an area with a dense transportation network is usually favorable for major operations. An area crisscrossed with canals and railroads but with few roads will limit the use of wheeled vehicles and the maneuver of armor and motorized convoys. Railroads extending along the axis of advance will assume greater importance than those perpendicular to the axis, and the direction of major highways and waterways assumes similar significance. When preparing GEOINT studies and data bases in support of MAGTF operations, planners must carefully evaluate all transportation capabilities and limitations to determine their effect on possible COAs.

1005. Multilevel GEOINT Support Operations

a. Marine Expeditionary Force

GEOINT support operations for the MAGTF are topographic platoon-centric and revolve around the MAGTF intelligence operation center (IOC) and the supporting CIS network to provide a push/pull information management capability to all levels of the MAGTF. The topographic platoon is connected to the Global Command and Control System (GCCS) to support intensification and integration of all-source geospatial data bases. Topographic platoon (topo plt), intel bn, MEF headquarters group (MHG), provides MAGTF general support and establishes the tactical geospatial information library (TGIL). The TGIL ensures MAGTF intelligence sections and division, wing, and support group intelligence direct support teams have access to GEOINT. The TGIL allows GI and GEOINT to be pushed down to or pulled up by commands throughout the MAGTF.

Downloaded from http://www.everyspec.com

Close coordination between topo plt and MAGTF meteorological and oceanographic (METOC) personnel is important for comprehensive GEOINT support. The MEF senior weather officer within the G-2 division and the intelligence support coordinator (ISC) in the intel bn coordinate meteorological support to intelligence and impacts on MAGTF operations. The meteorological mobile facility, located in the aviation combat element (ACE), is the hub for meteorological support to the MAGTF. This facility can process GCCS overlays for use by the topographic unit and intelligence analysts. (See MCWP 3-35.7, *MAGTF Meteorology and Oceanography [METOC] Support*, for further information on MAGTF METOC support operations.)

b. Marine Expeditionary Unit (Special Operations Capable)

Within the Marine expeditionary unit (MEU) (special operations capable [SOC]) command element, GEOINT is produced by the geographic intelligence team (GIT) that is task-organized from the topo plt and under the staff cognizance of the MEU intelligence officer. The GIT is connected to the internal ship communications links giving all elements of the MEU access to the TGIL. Using the ship's CIS, the GIT is supported in reachback mode by the parent MEF's topo plt and the Marine Corps Intelligence Activity (MCIA). This provides the MEU with a robust GEOINT production capability to integrate, deconflict, and intensify the land, air, and water interface environment.

c. Joint and Theater

During joint operations, the topo plt is connected to theater C2 networks providing access to the theater and other Services' geospatial data base. The theater geospatial information library (GIL) provides operational GEOINT, ensuring interoperability and standardization among all forces within the theater of operations. In the event of coalition or multinational operations, the GIL provides a common framework for all forces to reduce information uncertainty and enhance interoperability. At the theater level, access to JIC and JAC GI&S branches provides GEOINT for production support and a repository for tactical production to ensure a common framework for visualization throughout the theater.

d. National and Strategic Support

The MCIA provides a dedicated geospatial production support capability to Marine Corps operating forces. A trusted coproducer in the national distributive intelligence production network, MCIA focuses on Marine Corps interests within the littoral zones of the world. MCIA maintains a global littoral data base and provides GEOINT tailored to mission requirements from a robust client and server configuration. Forces can access this GEOINT via the intelligence link (INTELINK), secret internet protocol router network (SIPRNET), nonsecure internet protocol router network (NIPRNET), and the Global Broadcast System (GBS) configurations. In addition, MCIA can rapidly generate an MSDS to support MAGTFs and link this data set to the NIMA lithographic presses for hard-copy production. MAGTFs, via MCIA, will be able to query the national geospatial data base and receive GI and GEOINT from NIMA, Defense Intelligence Agency, Central Intelligence Agency, other Services, and commercial sources.

1006. GEOINT Cycle

GI and GEOINT activities occur in all phases of the intelligence cycle. GEOINT is interwoven throughout the cycle to ensure collection, integration, analysis, dissemination, and use of intelligence data is tied to the geographic framework. Like the other forms of intelligence, GEOINT is a never-ending process that is continually updating intelligence studies, evaluations, estimates, and data bases.

The GEOINT process begins with receipt of the warning order or initiating directive and continues beyond completion of the mission. While afloat or deployed for operations, the topo plt or GIT begins the GEOINT process for identified missions.

Downloaded from http://www.everyspec.com

Topographic methods of manipulating the GEOINT cycle will vary from unit to unit and will depend on the mission, commander's intent, and IRs.

As with the intelligence cycle, the GEOINT cycle has six phases (i.e., planning and direction, collection, processing and exploitation, production, dissemination, utilization). (See figure 1-6.) Through these phases, GI is obtained, assembled, analyzed, and converted into tailored GEOINT products, then disseminated to commanders and other users.

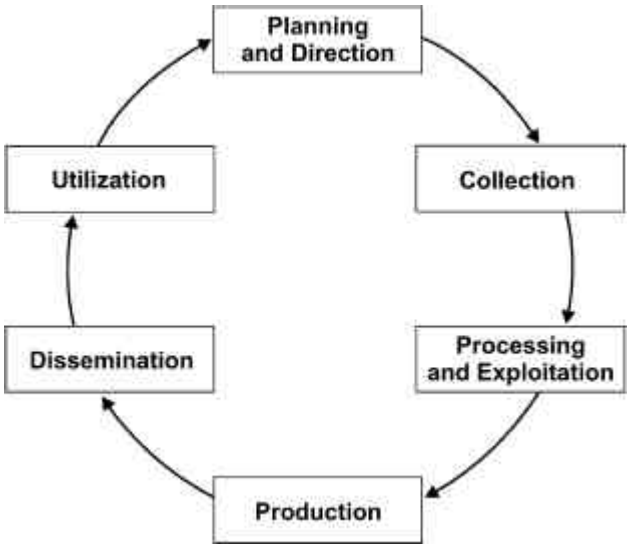

Figure 1-6. GEOINT Cycle.

a. Planning and Direction

GEOINT planning and direction phase is the spearhead of the GEOINT cycle. It supports—

- Defining the AO and AOI.
- Identifying information shortfalls and associated geospatial and GEOINT requirements.
- Accessing and reviewing existing data holdings and intelligence products.

After a warning order has been issued and commander's intent expressed, IRs are identified and prioritized. During the planning and direction phase, the intelligence staff officer (G-2/S-2) and GI&S staff, in conjunction with the operations staff officer (G-3/S-3), must identify the command's AOI and AO. Specific objectives and targets need to be identified as soon as possible to ensure requirements are levied for production and intensification.

As the planning and direction phase continues, commanders and planners identify and submit essential elements of terrain information (EETI) as an IR. The ISC and the collection management and dissemination officer (CMDO) coordinate with the MEF CE intelligence staff, and the production and analysis (P&A) cell to refine and prioritize requirements, develop supporting intelligence plans, and then task appropriate collection assets against the requirements. Concurrently, the GI&S staff coordinates GEOINT production requirements with the P&A cell OIC. Close integration with the MAGTF CE's operations and intelligence sections is critical to support COA development and to identify potential GEOINT issues affecting mission alternatives.

Planning must always address connectivity between intelligence assets and supported users. Plans should call for communications reliability, capacity, redundancy, and speed. The MAGTF CIS officer must always be included when planning GEOINT activities' CIS support (see chapter 5). Accurate management and storage of theater and MAGTF geospatial and GEOINT data bases are critical to ensure availability and interoperability with all components of the MAGTF. Ready access to critical battlespace views by all commanders and planners requires adequate communications paths to all MAGTF command echelons and other supported units.

b. Collection

Collection is the gathering of intelligence data and exploitation of sources by intelligence and reconnaissance agencies. GI and GEOINT collection begins with the identification and prioritization of EETIs. The collection phase of the GEOINT cycle involves the gathering of GI from all available sources. This would include querying the GIL data base networks for potential

Downloaded from http://www.everyspec.com

solutions, source materials, and if required, the development of a request for intelligence (RFI) for tactical collection support.

Collection planning involves matching the multitude of GEOINT and other IRs with a finite pool of collection assets. Collection may include multisource intelligence reports (e.g., imagery intelligence [IMINT], signals intelligence [SIGINT], human intelligence [HUMINT]) and must be able to access tactical intelligence and reconnaissance reports (e.g., route reconnaissance, bridge studies, engineering reports), as well as information and reports available from non-intelligence sources (e.g., engineer, civil affairs, and military police units).

Other collection sources include riverine and oceanographic surveys as well as terrain and imagery reconnaissance. Organic topographic collection activities include tactical geodetic and topographic surveys, analysis of riverine and oceanographic surveys, and terrain reconnaissance. Organic MAGTF assets must always be considered first due to their advantages in responsiveness and control. Prior to arrival in the AO, the MAGTF largely depends on external collection resources. After the MAGTF begins operations in the objective area, organic topographic, SIGINT, HUMINT, IMINT, engineer, reconnaissance, and other assets are used for collection.

c. Processing and Exploitation

The processing and exploitation phase is the conversion of collected GI into a form suitable for GEOINT production and support to other intelligence products. It is a continual process generally accomplished concurrently during collection and/or production. Processing and exploitation require topographic unit CIS connectivity to national, theater, JTF, and other geospatial information sources. This phase includes the compilation and deconfliction of various sources to ensure a single, accurate geospatial data base to support MAGTF operations within the theater. The topo plt provides the capability to retrieve, integrate, deconflict, and store multisource GI and GEOINT into a tailored, seamless data base to meet MAGTF requirements.

d. Production

Production is the conversion of GI into GEOINT and other all-source intelligence products through evaluation, integration, intensification, analysis, and interpretation. This demands a focused approach for managing, tasking, and operating a collaborative GEOINT production capability to ensure all efforts are prioritized and accomplished according to the needs of the MAGTF. (See appendix A for a description of GEOINT products and reports.)

The topo plt provides the ability to analyze integrated data bases for specific applications, add valuable information or update features and attributes within the data base, and intensify the data base content to meet tailored mission requirements. The GEOINT specialist evaluates all-source terrain, littoral, hydrographic, geodetic, and weather information to support specific mission requirements. Then the GEOINT specialist must intensify the information with other known information to develop GEOINT estimates associated with the terrain's military aspects.

Integration is the combining of the geospatial and METOC elements to develop the framework for the COP and CTP. Analysis allows the specialist to sift and sort the GI to isolate significant mission-related elements and develop potential impacts to MAGTF personnel, systems, weapons, and/or equipment. Interpretation consists of evaluating the GI, intensifying critical detail and resolution within distinct objective areas, value-adding locally procured tactical intelligence, and analyzing it to isolate significant elements with respect to the mission, target, and type of command. Production tailors the GEOINT to form logical views (or products) and is incorporated in the TGIL and/or hard-copy products for further dissemination throughout the MAGTF and to other organizations. A key GEOINT product is the modified combined obstacle overlay (MCOO),

Downloaded from http://www.everyspec.com

which becomes the foundation for the IPB process and COA development.

e. Dissemination

Dissemination is the timely conveyance of GI and GEOINT, in an appropriate form and by any suitable means, to those who need it. GEOINT must be effectively disseminated to MAGTF commander and planners, MAGTF subordinate elements, and other forces and organizations in time for decisionmakers to assess and use it to affect COA development and analysis and other planning and decisionmaking activities.

When determining the GEOINT dissemination requirements, the means, timeliness, and pertinence are the primary considerations. Dissemination does not occur automatically. It is a result of simultaneous efforts at each MAGTF command echelon to push GI and GEOINT out to those needing it and to pull GI and GEOINT in from every available source. The ability to rapidly disseminate updated GEOINT to all users through a smart push capability will help ensure that critical GEOINT and other information are made available to the entire MAGTF.

The Marine Corps is using an open technical architecture supporting the geospatial domain that has evolved within the United States Imagery and Geospatial Information System (USIGS) architecture. It will support dissemination of geospatial data external to operational and tactical forces through the GCCS and the GBS.

Primary access to the topographic unit's TGIL through the MAGTF's tactical data network (TDN) ensures each level of command can access the tailored GEOINT products necessary to support the mission. The platoon will use redundant CIS capabilities to support electronic dissemination.

Local printer replication (limited copies) will support hard-copy GEOINT products reproduction to support units requiring a paper medium. Mass production will continue to be supported through NIMA's digital to lithographic press capabilities or from other external sources.

f. Utilization

Utilization is the last and most important step in the GEOINT cycle. Intelligence officers and the topographic Marines are responsible for ensuring the final GEOINT product effectively satisfies all commanders' IRs. Only usable GEOINT will provide commanders and staffs the framework necessary to visualize the battlespace in two or three dimensions as they develop, analyze, and select COAs; develop plans and orders; and make decisions and execute.

Downloaded from http://www.everyspec.com

Chapter 2

Organizations and Responsibilities

The Assistant Chief of Staff (AC/S), Command, Control, Computers, Communication, and Intelligence (C4I), Headquarters, U.S. Marine Corps (HQMC), is the functional leader for GI&S and GEOINT functions within the Marine Corps combat development system. Day-to-day management of these functions is delegated by AC/S, C4I, to the Director, MCIA. Marine Corps operating forces and supporting establishment GI&S and GEOINT missions, functions, organizations, and assigned responsibilities are discussed in this chapter. Organizational points of contact are provided in appendix B. Specific responsibilities and tasks are provided in the appendix C matrix.

2001. Geospatial Information and Services

a. Marine Corps Geospatial Information Management Office

As a special staff office under the Director, MCIA, the Geospatial Information Management Office (GIMO) serves as the Marine Corps representative to the DOD GI&S community. GIMO supports the operating forces, HQMC, and the supporting establishment with technical assessments, evaluations, and review authority for all Marine Corps GI&S matters.

(1) Mission

GIMO provides GI and GEOINT support to the Marine Corps by coordinating Marine Corps GII matters including policy; proponency for service doctrine and tactics, techniques, and procedures (TTP); personnel; technologies; architectures; and standards required for Marine Corps GI and GEOINT support. This support includes serving as the Marine Corps representative on appropriate GI&S forums, developing GI&S policies and positions, and staffing joint and Service GI&S documents. It also includes developing, validating, submitting, and advocating proponency of Service requirements for DOD and national GI&S production support of training bases, emerging systems, and military intelligence.

(2) Organization

MCIA established GIMO as a centralized management office to coordinate Marine Corps geospatial support (see figure 2-1). By the table of organization (T/O), the Marine Corps GI&S officer is a major, military occupational specialty (MOS) 0202. In addition, the T/O provides for a general service (GS)-12 mapping officer and a GS-9 intelligence assistant.

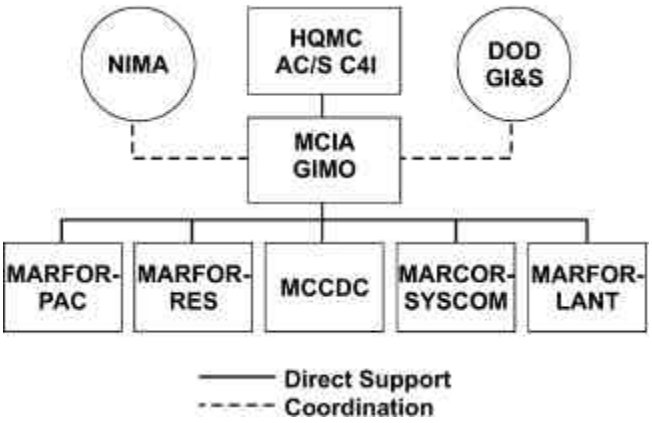

Figure 2-1. GIMO Support.

(3) Responsibilities

The GIMO provides a single point of contact for all Marine Corps GI&S and GEOINT issues within national, international, DOD, joint, and Service forums. This provides an integrated and centrally managed approach across all functional aspects of GI&S and GEOINT within the Marine Corps.

Downloaded from http://www.everyspec.com

The GIMO—

- Provides the Marine Corps direct interface to the NIMA for all new GI development and production.
- Provides input to the technical design and description of emerging GI and products early in their development to ensure Marine Corps requirements are met.
- Ensures the interoperability of GI and GEOINT standards to support legacy and emerging MAGTF C2, CIS, weapon delivery, and other systems.
- Coordinates with the following activities to ensure that all aspects of GEOINT support are addressed and integrated:
  - HQMC (policy, personnel, programs, and resources).
  - Marine Corps Combat Development Command (MCCDC) (training, education, doctrine, total force structure, and requirements).
  - Marine Corps Systems Command (MARCORSYSCOM) (all equipment and software generating or using GI).
- Coordinates with Headquarters, Marine Corps Forces (MARFOR), the MEF CEs, intel bn MSCs, and topo plts to ensure interoperability, standardization, and compliance with Joint Chiefs of Staff (JCS), DOD, and Marine Corps directives.
- Supports the AC/S, C4I, with Service-level oversight for all Marine Corps GI&S functional areas, to include—
  - Evaluating development of terrain and oceanographic data and systems.
  - Developing policy for Marine Corps GI&S standardization and interoperability.
  - Validating Marine Corps GI&S requirement submissions (training, research and development, and intelligence).
  - Ensuring all aspects of the Marine Corps GI are compatible with doctrine.

(4) Tasks

Refer to appendix C.

b. Marine Corps Forces, GI&S Section

Under the functional control of the AC/S, G-2, the GI&S section serves as the MARFOR commander's technical representative with GI&S elements. In addition, the MARFOR GI&S section provides a dedicated point of contact for GI&S and/or GEOINT issues within the commander's specified theater or operational area. The MARFOR GI&S section provides an integrated approach to identifying, consolidating, and validating GEOINT production requirements and supporting operations (see figure 2-2).

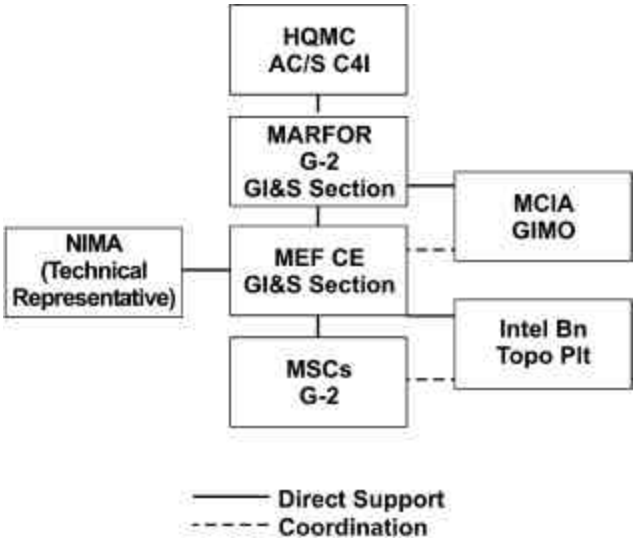

Figure 2-2. Marine Corps Forces GI&S Support.

(1) Mission

The MARFOR GI&S section coordinates the development, validation, and establishment of MARFOR's requirements for GI&S priorities, standard products, and supporting operations with the appropriate unified and subordinate commands. In addition, the GI&S section represents the MARFOR in appropriate GI&S forums responsible for validating GI&S resource allocations and system capabilities within the MARFOR's AO.

Downloaded from http://www.everyspec.com

(2) Organization

The GI&S section consists of two GEOINT specialists, MOS 0261. These billets require a gunnery sergeant and sergeant with formal GI&S staff officer training by the Defense Mapping School (DMS), Ft. Belvoir, Virginia. This section is under the cognizance of the G-2 intelligence operations officer. It assists in the coordination of geospatial issues with intelligence plans, collections, production, targeting, dissemination, counterintelligence, and other staff sections.

(3) Responsibilities

- Validates requirements and coordinates the production of all GI&S, GI, and GEOINT requirements for the MARFOR headquarters and supported commands. This includes the following requirements:
  - Global-sourcing GEOINT personnel with the MARFOR personnel division (G-1).
  - Helping define the area of operations, mission objectives, and force list with the MARFOR operations division (G-3).
  - Developing the distribution of hard-copy GI and GEOINT products with the MARFOR logistics and supply division (G-4).
  - Identifying production requirements for long-range objectives with the MARFOR future plans division (G-5) and intelligence production personnel.
  - Coordinating GEOINT CIS requirements for national, theater, and MAGTF operations with the MARFOR CIS division (G-6).
  - Coordinating all national GI and GEOINT production requirements for Marine Corps training areas with the GIMO.
- Provides MARFOR oversight to theater GI&S functions, to include policies, TTP architectures, technologies, and personnel. The GI&S section will influence the determination and development of unit and mission profiles to support operations within their operational area to ensure tactical requirements are met.
- Ensures the interoperability of GI and GEOINT standards within the operational area to support tactical MAGTF systems and weapon delivery systems.

(4) Tasks

Refer to appendix C.

c. MEF CE, G-2 Division, Imagery and Mapping Section

As a functional staff office under the cognizance of the MEF G-2 plans officer, the imagery and mapping (I&M) section serves as the MEF commander's technical representative for GI&S activities. This section provides a single point of contact for MEF GI&S and GEOINT issues within a specified theater or operational area. The MEF GI&S section coordinates with the ISC to provide an integrated approach to identifying, consolidating, and validating GEOINT production and operations requirements (see figure 2-3 on page 2-4).

(1) Mission

The MEF I&M section coordinates MEF GI&S matters, to include determining and developing MAGTF area requirements for GI&S priorities, standard products, and supporting operations with appropriate MARFOR and MSC GI&S offices. This section implements plans, policies, and support to future plans to support collections, collaborative production, and use of GEOINT. It also provides professional, technical GI&S and GEOINT advice and assistance to subordinate commanders. The MEF I&M section develops, coordinates, and forwards all recommendations on GI&S product specifications and standardization agreements to appropriate MARFOR GI&S offices. In addition, this section represents the MEF in appropriate Service and theater GI&S forums responsible for validating topographic production resources and system capabilities within a theater of operations.

(2) Organization

Located in the intelligence division's plans branch, the MEF I&M section contains a mapping

Downloaded from http://www.everyspec.com

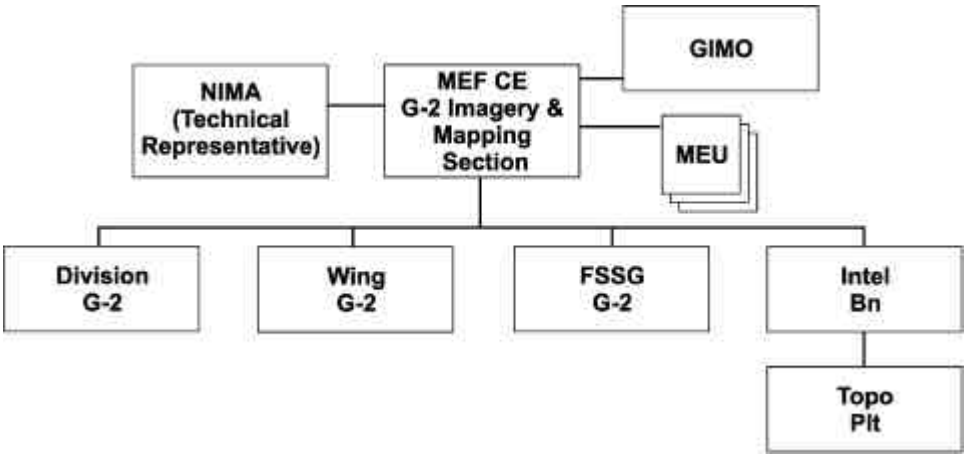

Figure 2-3. MEF Imaging and Mapping Section Support Relationships.

and imagery officer (MIO) (major, 0202) and two geographic intelligence specialists (MOS 0261). The billets call for a gunnery sergeant and a staff sergeant with formal DMS GI&S staff officer training. The I&M section is under the cognizance of the intelligence plans officer. It assists the ISC and other intelligence personnel in the coordination of geospatial issues with intelligence plans, collections, all-source production, dissemination, targeting, and other support.

(3) Responsibilities

- Validates requirements and coordinates the production of all GI and GEOINT requirements and supporting operations for the command element and subordinate elements with appropriate GI and GEOINT organizations. These GI&S requirements include—
  - Global-sourcing personnel with the MEF G-1.
  - Assisting the G-2, G-3, and future planners with defining the area of operations, mission objectives, and force list.
  - Assisting the ISC and MEF G-4 with developing the distribution of hard-copy GEOINT and GI products.
  - Identifying production requirements for long-range objectives with the MEF G-5 and intelligence personnel.
  - Assisting the ISC and MEF G-6 with coordinating CIS requirements for national, theater, and MAGTF GEOINT and GI distribution.
- Coordinates the development and submission of all GI&S requirements from all MEF CE staff divisions during garrison and actual operations.
- Coordinates the validation, prioritization, and tasking of all GI&S requirements submitted by MEF subordinate units during garrison operations.
- Coordinates all standard NIMA GI&S production requirements with the MARFOR GI&S staff for validation to the GIMO (for training areas) or to the appropriate combatant command (for contingency planning and operational areas).
- Provides coordinated oversight of all MEF GI&S functions, to include policies, architectures, technologies, and personnel.
- Assists the G-2 plans officer and ISC with the determination and development of unit and mission profiles to support operations within the operational area to ensure MEF requirements are satisfied.
- Assists the ISC with oversight to the MAGTF's GII and TGIL to ensure compatibility with the intelligence concept of operations and supporting plans as well as MEF operations and CIS concepts of operations and plans.

(4) Tasks

Refer to appendix C.

Downloaded from http://www.everyspec.com

d. Major Subordinate Commands

The Marine division, Marine aircraft wing (MAW), and force service support group (FSSG) do not have organic GI&S and GEOINT personnel within their command. Instead, each MSC G-2 must designate a single point of contact for GI&S and GEOINT issues. This helps provide an integrated approach to identify, consolidate, and validate GI&S and GEOINT production requirements from the MSC and the planning and execution of supporting operations (see figure 2-4).

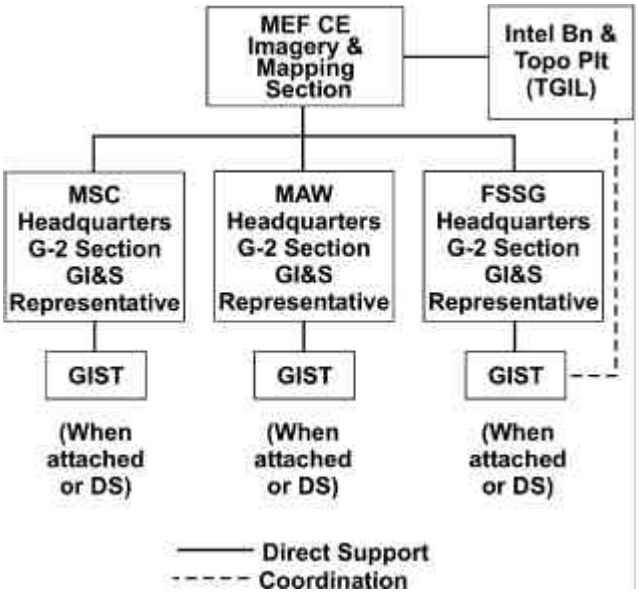

Figure 2-4. MSC GI&S and GEOINT Support Relationships.

(1) Mission

The G-2 designated GI&S representatives coordinate the command's GI&S requirements, operations, and support to include determining and developing area requirements for GI&S priorities and standard products with intel bn, the ISC, and the MEF I&M section. In conjunction with the MEF I&M section, these representatives implement plans, policies, procedures, and programs to support a collaborative process for GEOINT collection, production, dissemination, and use. They also develop and forward to the MIO (garrison operations) or ISC (actual operations) all recommendations on GI&S product specifications and standardization agreements. In addition, they represent their command in appropriate GI&S forums responsible for validating GI&S resource allocations, system capabilities, and operations within their theater of operations.

(2) Organization

The MSC AC/S G-2 shall designate a GI&S representative within the G-2 section. Generally, this GI&S representative is under the control of the G-2 intelligence operations officer. The individuals assigned this responsibility are trained at the DMS.

(3) Responsibilities

- Provides the command with a single point of contact for validation and development of all GI&S and GEOINT requirements and supporting operations from other MSC staff divisions and subordinate commands (e.g., regiments, groups, battalions, squadrons).
- Plans, directs, and coordinates GI and GEOINT operations in support of the command's requirements, including direction of any attached or direct support geographic intelligence support team (GIST).
- Develops unit and mission profiles necessary to acquire MSDS for tactical operations (see chapter 4).
- Provides guidance and assistance to support the command request for GI&S products and GEOINT production.

(4) Tasks

Refer to appendix C.

2002. Geographic Intelligence

a. Key MEF Intelligence Staff Planning and Direction Responsibilities

(1) Assistant Chief of Staff, G-2

The AC/S G-2 has staff responsibility for intelligence and intelligence operations, to include GEOINT. The commander relies on the intelligence officer to provide the necessary

Downloaded from http://www.everyspec.com

information on the weather, terrain, and enemy capabilities, status, and intentions. Through the intelligence operations plan and supporting intelligence and R&S plans, the MEF AC/S G-2 validates and plans IRs, coordinates intelligence priorities, integrates collection, production and dissemination activities, allocates resources, assigns specific intelligence and reconnaissance missions to subordinate elements, and supervises the GEOINT and overall intelligence and reconnaissance efforts. Specific all-source and key GEOINT responsibilities include—

- Developing and answering outstanding MEF and subordinate units' PIRs and IRs by planning, directing, integrating, and supervising organic GEOINT and multi-discipline MEF and supporting intelligence operations.
- Preparing appropriate GEOINT and other intelligence plans and orders for the MEF and reviewing and coordinating the GEOINT and all-source intelligence plans of JTFs, theaters, and other organizations.
- Submitting and coordinating all-source and GEOINT collection, production, and dissemination requirements beyond the capability of the MEF to satisfy to higher headquarters for JTF, theater or national GEOINT systems support.
- Ensuring GEOINT and other intelligence information is rapidly processed, analyzed, and incorporated where appropriate in all-source intelligence products, and rapidly disseminated to all MEF and external units requiring these.
- Evaluating JTF, theater, and national GEOINT and all-source intelligence support and adjusting stated IRs, if necessary.
- Identifying and correcting deficiencies in GEOINT and other intelligence and reconnaissance personnel and equipment resources.
- Incorporating exercise GEOINT in training exercises in order to improve MEF individual, collective, and unit readiness.
- Facilitating understanding and use of GEOINT and other intelligence in support of the planning and execution of MEF operations.

(2) G-2 Operations Officer

The G-2 operations officer, under the direction of the MEF AC/S G-2, has primary responsibility for intelligence support to the CG and the remainder of the MEF CE in support of current operations and future operations. Specific all-source and key GEOINT-related duties include (see figure 2-5)—

- Coordinating and providing intelligence support (to include key GEOINT support) to the CG, the G-3 operations section, and the rest of the MEF CE's battlestaff.
- Serving as the G-2 representative to the MEF CE crisis action team (CAT).
- Coordinating, providing and supervising intelligence support to the MEF CE current operations center (COC), future operations center (FOC), and force fires.
- Planning, directing, and supervising the Red Cell.
- Providing recommendations on PIR and IR validation, prioritization, and taskings to the AC/S G-2 and the ISC.
- Coordinating and supervising the transition of intelligence planning and operations from G-2 plans to G-2 future operations, and from G-2 future operations to G-2 current operations, in order to effectively support the MEF's "single battle" transition process.
- Planning, directing, and supervising MEF liaison teams to external commands (e.g., the JTF and joint functional components headquarters) and intelligence organizations.
- Coordinating with the ISC and MEF MSCs' G-2 operations officers to ensure unity of effort of MEF intelligence operations.
- Provide intelligence input and other support to MEF warning and fragmentary orders and to operations related reporting (e.g., periodic situation reports).
- Coordinating intelligence training for the MEF G-2 section and providing G-2 oversight for and integration of the entire MEF intelligence training program.
- Accomplishing other intelligence support and tasks as directed by the AC/S G-2.

Downloaded from http://www.everyspec.com

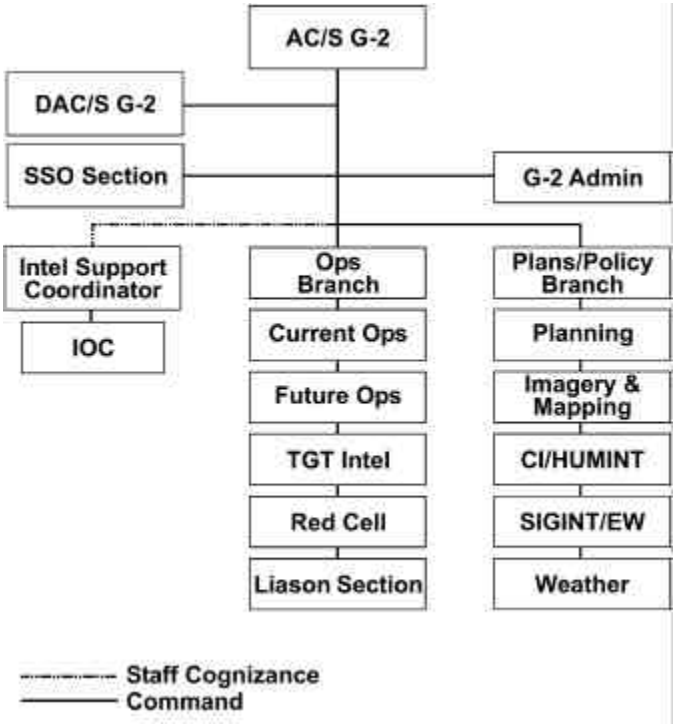

Figure 2-5. MEF G-2 Division Principal Staff Officers and Relationships.

(3) G-2 Plans Officer

The G-2 plans officer, under the direction of the MEF AC/S G-2, has primary responsibility for intelligence support to the MEF CE's future plans cell. Specific all-source and key GEOINT-related duties include (see figure 2-5)—

- Planning the MEF concept of intelligence operations for approved by the AC/S G-2 and subsequent implementation by the ISC based upon the mission, threat, commander's intent, guidance, and concept of operations. This concept of intelligence operations will include a supporting GEOINT concept of operations.
- Leading, coordinating, and providing intelligence support to MEF G-5 future plans section.
- Planning and coordinating intelligence support requirements for and the deployment of intelligence elements and resources into the AO.
- Providing recommendations on PIR and IR validation, prioritization, and taskings to the AC/S G-2 and the ISC.
- Coordinating, in conjunction with the ISC, G-2 development of Annex B (Intelligence) and Annex M (Geospatial Information and Services) to MEF operations plans (OPLAN), their supporting appendices, and all intelligence input to other annexes of OPLANs.
- Keeping the G-2 section, other CE staff sections, intelligence liaison personnel, augmentees, and others as appropriate apprised of MEF intelligence planning actions and requirements.
- Identifying requirements and providing recommendations to the G-2 operations officer for MEF intelligence liaison teams to external commands (e.g., the JTF or other components' headquarters) and intelligence agencies.
- Coordinating and developing policies for MEF intelligence, CI, and reconnaissance operations.
- Planning, directing, and supervising the MEF G-2's imagery and mapping, CI/HUMINT, SIGINT, and weather sections.
- Accomplishing other intelligence support and tasks as directed by the AC/S G-2.

(4) Intelligence Battalion Commander/Intelligence Support Coordinator

The intelligence battalion commander is responsible for planning and directing, collecting, processing, producing and disseminating

Downloaded from http://www.everyspec.com

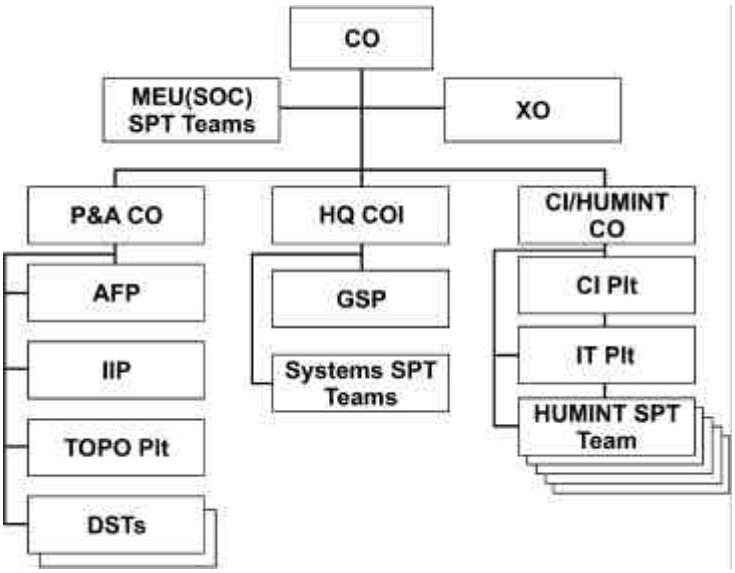

Figure 2-6. Intelligence Battalion.

intelligence, and providing counterintelligence support to the MEF, MEF MSCs, subordinate MAGTFs, and other commands as directed.

(a) Garrison

In garrison, the principal task of the intel bn commander is to organize, train, and equip detachments that support MAGTFs or other designated commands to execute integrated collection, intelligence analysis, production and dissemination of intelligence products. The composition of intel bn is shown in figure 2-6.

(b) Actual Operations

During operations, the intel bn commander is dual-hatted as the ISC[1], serving under the direct staff cognizance of the MEF AC/S G-2. The intel bn's S-3 section with the operations center element of the MEF G-2 forms the core of the ISC support effort, with planning, direction, and C2 conducted within the IOC's support cell. ISC is responsible to the MEF AC/S G-2 for the overall planning and execution of MEF all-source intelligence operations. Specific all-source and key GEOINT responsibilities of the ISC during actual operations include—

- Implementing the concept of intelligence operations (and the supporting GEOINT concept of operations) developed by the G-2 plans officer and approved by the AC/S G-2.
- Establishing and supervising operation of the MEF intelligence operations center (IOC), which includes the support cell, the surveillance and reconnaissance cell (SARC), and the P&A cell (see figure 2-7.). Generally, the IOC will be co-located with the MEF CE's man command post.
- Developing, consolidating, validating, and prioritizing[2] recommended PIRs and IRs to support MAGTF planning and operations.
- Planning, developing, integrating, and coordinating MEF intelligence collection, production, and dissemination plans, to include the effective organic and external integration and employment of MAGTF GEOINT as well as MEF

1. During garrison operations, many of the tasks listed here are the responsibility of the G-2 operations officer.

2. The ISC is tasked to perform PIR and IR validation *only* during actual operations when the IOC is activated. During routine peacetime operations the PIR/IR validation and prioritization tasks are the responsibility of the MEF CE's G-2 operations officer.

Downloaded from http://www.everyspec.com

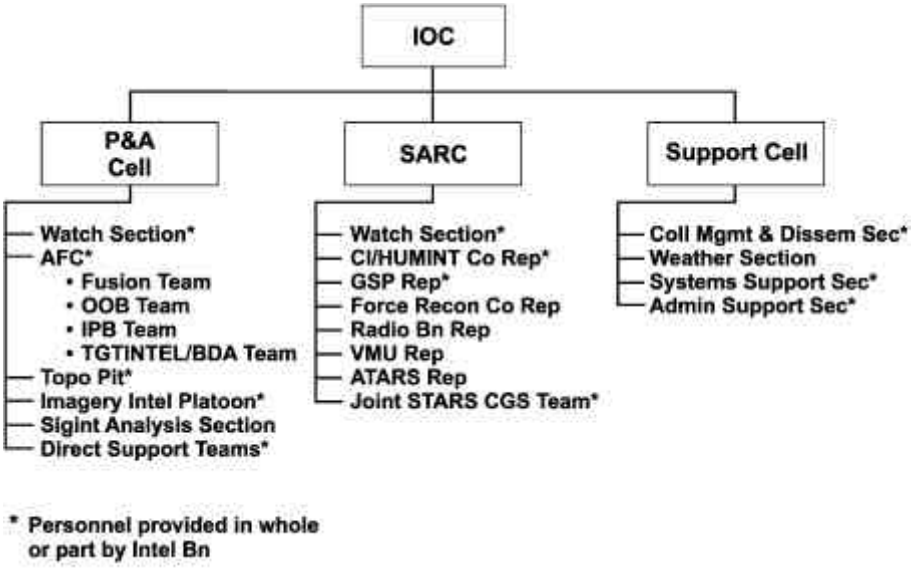

Figure 2-7. Intelligence Operations Center.

IMINT, SIGINT, counterintelligence (CI), HUMINT, ground remote sensors, ground reconnaissance, and tactical air reconnaissance intelligence collections, production, and dissemination operations.

- Developing and completing Annex B (Intelligence) and Annex M (Geospatial Information and Services) to MEF operations orders (OPORD), their supporting appendices, and all intelligence input to other annexes of OPORDs in conjunction with the G-2 plans officer and G-2 operations officer.
- Planning, developing, integrating, and coordinating intelligence and CI support to the commander's estimate, situation development, indications and warning, force protection, targeting, and combat assessment.
- Managing and fusing the threat (or *red*) COP/CTP inputs from subordinate units and external commands and intelligence agencies into the MEF CE's threat COP/CTP.
- Providing intelligence support to the MEF CE G-2 section and the MSCs.
- Preparing the intelligence and CI estimates to support G-2 plans.
- Planning, developing, and coordinating intelligence communications and information systems architecture, to include its integration with and support of MEF GEOINT and other intelligence and reconnaissance requirements.
- Coordinating and integrating MEF GEOINT and all-source intelligence operations with other service components, JTF joint intelligence support element (JISE), theater JIC or JAC, and national intelligence agencies and operations, to include all aspects of intelligence reach-back support.
- Assisting with the evaluation and improvement of MEF GEOINT and all-source intelligence operations.
- Accomplishing other intelligence support and tasks as directed by the AC/S G-2.

See table 2-1 on page 2-10 for a summary of the principal responsibilities of the AC/S, G-2's, three principal staff subordinate officers.)

(5) Collection Management/Dissemination Officer

The CMDO is sourced from the intel bn's S-3 section and is key subordinate to the intel bn commander/ISC during operations. The CMDO is responsible for formulating detailed intelligence collection requirements (ICRs) and intelligence dissemination requirements (IDR) and tasking and coordinating internal and external operations

Downloaded from http://www.everyspec.com

Table 2-1. AC/S G-2's Principal Subordinate Staff Officers and Their Responsibilities.

ISC	G-2 OPS O	G-2 PLANS O
Plan and execute of intel ops to support all MEF IRs	Intelligence support to MEF CE battlestaff and current ops center agencies	Intelligence support to the G-5 future planning team for future planning IRs
Establish and direct the IOC (P&A cell, SARC, and support cell)	Coordinate support to higher and adjacent headquarters and agencies	Recommends IR validation, prioritization, and tasking to AC/S G-2
IR management (collection, production, and dissemination) validation, prioritization, and tasking per AC/S G-2 direction	Recommends IR validation, prioritization, and tasking to AC/S G-2	Establish and direct the G-2 future planning intelligence element
Intel ops command of intel bn and staff cognizance over SIGINT, CI, HUMINT, MASINT, IMINT, and air-ground recon (includes staff cognizance of designated G-2 elements)	Establish and direct intelligence elements and support to the COC, FOC, tgt intel sec, force fires, red cell, and MEF intelligence liaison teams	G-2 section's imagery and mapping, CI/HUMINT, SIGINT, and weather sections (less that under staff cognizance of the ISC)

to satisfy these. The CMDO receives validated PIRs and IRs and direction from the ISC, and then plans and manages the best methods to employ organic and supporting collection and dissemination resources through the intelligence collection and dissemination plans, which includes GEOINT elements.

The CMDO is also responsible for validating and forwarding national and theater GEOINT and other collection requests from the MEF and MSCs typically using appropriate intelligence tools and TTP. The CMDO also is responsible for coordinating intelligence CIS requirements and maintaining awareness of available CIS connectivity throughout the MAGTF and with key external organizations. During operations, the CMDO works within the support cell.

In coordination with the P&A cell OIC, the SARC OIC, G-2 operations officer, GEOINT-related unit COs/OICs, and the MEF G-6, the CMDO is responsible to the ISC for the following GEOINT-related tasks.

- Determining and coordinating the collection effort of PIRs/IRs that may be collected via GEOINT and supporting resources (i.e., force reconnaissance company, UAVs, engineer units).
- Determining of PIRs/IRs and preparation of requests for intelligence (RFI) that are beyond organic capabilities and preparing submissions to higher headquarters and external agencies for support.
- Recommending dissemination priorities, development of intelligence reporting criteria, and advising on and selecting dissemination means.
- Developing and coordinating GEOINT and all-source intelligence collection plans, coordinating and integrating these with MEF, other components, JTF, theater, and national intelligence production operations.
- Developing and coordinating GEOINT and all-source intelligence dissemination operational plans and supporting architectures for both voice and data networked communications and coordinates and integrates these with MEF, other components, JTF, theater, and national intelligence CIS and dissemination operations.

Downloaded from http://www.everyspec.com

- Monitoring the flow of GEOINT throughout the MAGTF and ensuring that it is delivered to intended recipients in a timely fashion and satisfactorily meets their needs.
- Evaluating the effectiveness of MEF and supporting GEOINT collection and dissemination operations.

(6) Surveillance and Reconnaissance Cell OIC

The SARC OIC is also an immediate subordinate of the ISC and is responsible for supervising the execution of the integrated organic, attached, and direct support intelligence collection and reconnaissance operations (see table 2-1). The SARC OIC is responsible to the ISC for accomplishing the following specific GEOINT-related responsibilities include—

- Coordinating, monitoring, and maintaining the status of all ongoing GEOINT collection operations. This includes—
  - Missions, tasked ICRs, and reporting criteria for all collection missions.
  - Locations and times for all pertinent fire support control measures.
  - Primary and alternate CIS plans for both routine and time-sensitive requirements, both for GEOINT collectors as well as between the collectors or the SARC and key MEF CE and MSC C2 nodes, in order to support ongoing C2 of GEOINT collection operations and dissemination of acquired data and intelligence.
- Conducting detailed GEOINT collection, planning, and coordination with the MSCs and GEOINT organizations planners, with emphasis on ensuring understanding of the collection plan and specified intelligence reporting criteria.
- Ensuring other MAGTF C2 nodes (e.g., the current operations center, force fires) are apprised of ongoing GEOINT and other intelligence and reconnaissance operations.
- Receiving routine and time-sensitive GEOINT-related reports from deployed collection elements; cross-cueing among intelligence collectors, as appropriate; and the rapid dissemination of GEOINT reports to MAGTF C2 nodes and others in accordance with intelligence reporting criteria and dissemination plan.

(7) Production and Analysis Cell OIC

The P&A cell OIC is the third principal subordinate to the ISC, with primary responsibility for managing and supervising the MEF's all-source intelligence processing and production efforts (see table 2-1).

Key all-source and GEOINT-related responsibilities include—

- Planning, directing, and managing operations of the all-source fusion platoon (to include the fusion, order of battle, IPB, and target intelligence and/or battle damage assessment teams), the topographic platoon, the imagery intelligence platoon (IIP), the direct support teams (DST), and other analysis and production elements as directed.
- Maintaining all-source automated intelligence data bases, files, workbooks, country studies and other intelligence studies,
- Planning and maintaining imagery, mapping, and topographic resources and other intelligence references.
- Administering, integrating, operating, and maintaining intelligence processing and production systems, both unclassified general service (GENSER) and SCI information systems (e.g., the topographic production capability, image product library, JDISS, IAS).
- Analyzing and fusing GEOINT with other intelligence into tailored all-source intelligence products to satisfy all supported commanders' stated or anticipated PIRs and IRs.
- Developing and maintaining current and future intelligence situational, threat, and environmental assessments and target intelligence based upon all-source analysis, interpretation, and integration.

Downloaded from http://www.everyspec.com

b. Key GEOINT Producers Responsibilities

(1) Geospatial Analysis Branch, MCIA

The Geospatial Analysis Branch (GAB), MCIA, provides a dedicated Marine Corps Service-level production capability focused on producing and maintaining GI and GEOINT. This branch provides GEOINT production support to the operating forces, HQMC, MCCDC, the Marine Corps University (MCU), and other supporting establishment organizations.

Through web-based technologies, the GAB provides a limited reach-back capability for MAGTFs and other organizations requiring GI and tailored GEOINT. This capability is expanding. It will provide a dedicated production environment that supports deliberate and crisis query, receipt, analysis, production, and dissemination of GI and GEOINT for MAGTF requirements within the littoral regions of the world. The GEOINT must be detailed enough to support tactical analysis, planning, and decisionmaking. In addition, it must serve as the frame of reference for the fusion of information and intelligence from other sources (e.g., environmental, logistical, operational, intelligence, diplomatic). Further, the GEOINT will support rapid intensification with even greater density to meet the mission specific requirements of deployed MAGTFs (see figure 2-8).

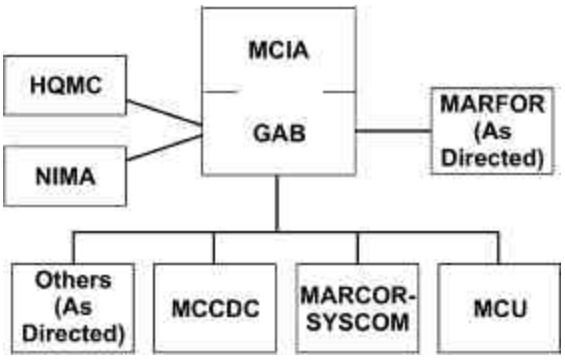

Figure 2-8. GAB GEOINT Support Relationships.

(a) Mission

The GAB provides GI and GEOINT support to operating forces' contingency planning and other GEOINT requirements which are not satisfied by organic, theater, other Service or national GEOINT research and analysis capabilities. It also provides tailored GI and GEOINT support to the Commandant of the Marine Corps (CMC), the staff and the supporting establishment. The GAB maintains the Marine Corps Geospatial Information Library (MCGIL) and provides a validation and standardization point of entry into the national GEOINT distributive and collaborative production network.

(b) Organization

The GAB is under Intelligence Production Division, MCIA. The branch consists of five civilians (GS-14 to GS-07) and two staff sergeants, geographic intelligence specialists, (MOS 0261). All production requirements are established, tracked, and coordinated with Operations/Production Management, MCIA.

(c) Responsibilities

Through prioritized production tasking from the CMC, the operating forces, and the supporting establishment, the GAB—

- Queries, retrieves, integrates, deconflicts, and analyzes multisource GI from national, international, joint, coalition, and other Services to produce timely, relevant GEOINT in support of validated requirements.
- Supports the rapid integration of national data bases and products to support forward deployed MAGTFs by providing access to the MCGIL for a smart push/pull capability. The MCGIL client and server is connected to multiple communication paths (e.g., INTELINK, SIPRNET, GBS, MAGTF TDN) to support the topo plt and all deployed GITs with access to the national production network. Future implementations will establish GAB as a NIMA-trusted coproducer with the commensurate capability to access and insert data in the national repositories.

Downloaded from http://www.everyspec.com

- Supports the GIMO in establishing policy and standards for implementing NIMA and DOD data bases in accordance with USIGS.
- Provides assistance to MAGTFs in establishing and maintaining their TGILs.
- Populates and maintains the Marine Corps GEOINT repository for all littoral areas within the USIGS production network. This MCGIL capability supports the intensification and generation of detailed terrain studies using all-source GI to create GEOINT products such as land use classification, slope, trafficability studies, LOC, and soils and obstacles. These products are geodetically referenced, produced in soft-copy format, and disseminated in hard-copy, electronic or digital format. Unclassified data may be enhanced with digital high resolution video products for the widest possible dissemination.
- Provides a technical forum for evaluating emerging data bases and new product, system, and software technologies. This evaluation supports interoperability and standardization by facilitating integration and training requirements before new equipment and software are fielded to operating forces.

(d) Tasks

Refer to appendix C.

(2) Topograhic Platoon, Intelligence Battalion

The topo plt, intel bn provides each MEF an organic, GEOINT analysis, production, and dissemination capability for tailored geographic views and other GEOINT activities in general support of MEFs or supported commands' IRs. The topo plt is under the command of the intelligence battalion. During operations, intel bn (or its detachments) is under the operational control (OPCON) of the supported unit's commander, with staff cognizance of it being executed by the unit's intelligence officer. The topo plt receives its production requirements from the intel bn commander/ISC with staff assistance by the G-2 GI&S section and the intel bn production and analysis company (P&A Co.) commander/P&A cell OIC. This coordination ensures availability and interoperability of the geospatial data base within a theater of operations and the overall effectiveness of MEF GEOINT operations and support.

(a) Mission

Topographic platoon provides tailored GI and GEOINT products, geodetic and topographic surveys, coastal and riverine hydrographic analysis, and other GEOINT products and services in support of the MEF and other organizations as directed.

(b) Organization

There are three Marine Corps topo plts, one organic to each MEF's intel bn. The first and second topo plts have a T/O of 1 officer and 42 enlisted. The third topo plt T/O has 1 officer and 34 enlisted. The topo ply is comprised of enlisted GEOINT specialists (MOS 0261). They provide the expertise necessary to plan, produce, and disseminate critical GEOINT. The platoon commander is an intelligence officer (MOS 0202). Each topo plt is organized around two separate functional areas. The GEOINT section is focused on integration, value-adding, and production of GEOINT and the population of the TGIL in support of all elements of the MAGTF. The geodetic/hydrographic survey section is focused on tactical GEOINT collection for intensification and value-adding new attributes to the GEOINT section's geospatial data base. (See figure 2-9.) During tactical operations, emphasis is on GEOINT analysis and production to support MAGTF mission-specific requirements and other IRs.

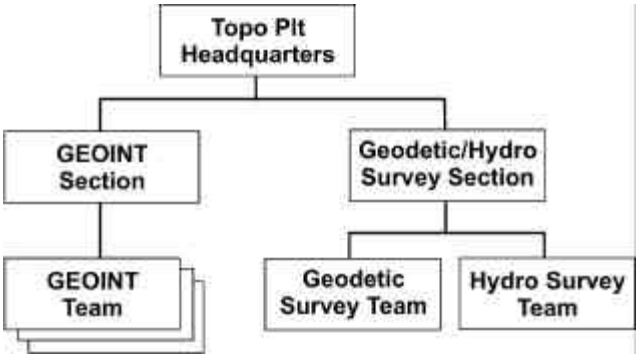

Figure 2-9. Topographic Platoon Organization.

Downloaded from http://www.everyspec.com

A single topo plt is capable of simultaneously supporting three MEU(SOC)S/SPMAGTFs in addition to the MEF. Additionally, the topo plt can provide the following task-organized capabilities to various levels of the MAGTF:

- GISTs are the principal GEOINT support topo plt may provide to MSCs. A GIST is normally a four-Marine team of GEOINT specialists with specialized equipment. The team may be either attached to or placed in direct support of a MAGTF, a MSC or a subordinate unit. Normally, it will operate under the staff cognizance of the unit intelligence officer. The mission, tasks, and functions of the GIST parallel those of the topo plt.
- GITs are the principal GEOINT support topo plt provides to the MEU(SOC). Normally, a GIT is a two-Marine team of GEOINT specialists with specialized equipment. This team is attached to the MEU(SOC) CE under the staff cognizance of the S-2. The mission, tasks, and functions of the GIT parallel those of the topo plt.

Note: GITs are sourced from the MEU support team section, intel bn [T/O 4717 and 4717M]. (When not deployed, these teams will be integrated into topo plt's operations.)

(c) Responsibilities

- Plans MAGTF GEOINT operations per ISC tasking and provides the following GI&S and tailored GEOINT support to MAGTFs and other commands as directed:
  - Provides tailored, mission-oriented topographic map products to supplement standard NIMA maps and charts.
  - Coordinates with CMDO, SARC OIC, and P&A cell OIC, and other MAGTF and supporting intelligence, reconnaissance, and combat units to collect, analyze, synthesize, produce, and disseminate geographic information and intelligence and to assist with all-source intelligence production (e.g., HLZ studies).
  - Prepares map substitutes such as overlays, overprints, photomosaics, map revisions, and multicolor charts.
  - Revises and reproduces limited quantities of combat charts, coastal charts, port charts, and harbor charts. Products may include three-dimensional terrain models, LOS studies, range fan studies, terrain factor overlays, hydrographic charts, landing zone studies, and similar products.
  - Prepares coastal hydrographic surveys from the 6-fathom depth curve (or from where the Navy ocean survey ends) to the high-water line. The survey is extended beyond the beach to the first line of communications that allows lateral movement behind the beach.
  - Collects coastal data regarding trafficability, routes of egress, and inland water bodies.
- Populates the TGIL with data bases to support all MAGTF requirements.
- Supports specific missions, target areas, and IRs by rapidly integrating and intensifying additional information.
- Operates the topographic set (TOPOSET). TOPOSET is a multiworkstation, high-end, geographic information system (GIS) that is capable of integrating, deconflicting, analyzing, producing, and disseminating theater, Service, and national geospatial data bases and GEOINT products (see appendix D). Using the TOPOSET, the topo plt can—
  - Provide rapid integration and analysis of multispectral, hyperspectral, and national imagery with GEOINT and other intelligence.
  - Provide the commander with a geospatial intelligence capability within a designated battlespace.
  - Query, retrieve, integrate, deconflict, and analyze multisource GI provided by GAB, joint, other Services, and coalition GI&S and GEOINT data bases.

Downloaded from http://www.everyspec.com

(d) Tasks

Refer to appendix C.

2003. National Support

a. National Imagery and Mapping Agency

(1) Mission

NIMA provides timely, relevant, and accurate imagery, imagery intelligence, and GI to support national security objectives and to meet national and military operational and training needs.

(2) Organization

NIMA, the newest DOD combat support agency, was established by the National Imagery and Mapping Act of 1996. In recognition of its unique responsibilities and global mission, NIMA is also designated a part of the U.S. intelligence community.

(3) Responsibilities

- Coordinates imagery collection, processing, exploitation, and dissemination requirements among DOD, intelligence community, National Security Council, and other Federal Government agencies and departments.
- Serves as the clearinghouse for the acquisition of commercial imagery collection and GI data sets (see figure 2-10).

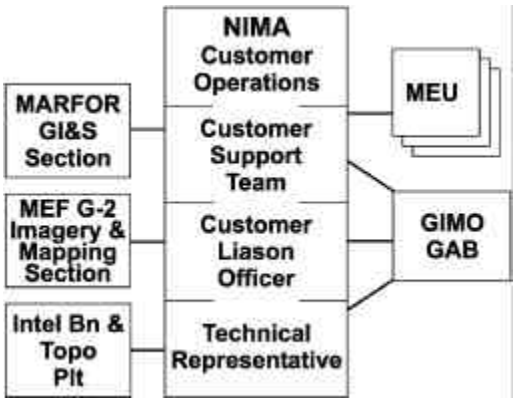

Figure 2-10. NIMA GI&S and GEOINT Support.

- Provides strategic direction support by—
  - Identifying and obtaining products and services available from other activities that meet customer needs.
  - Establishing an easily accessible data base with the information and applications that customers require.
  - Transitioning from custom systems to flexible commercial solutions. (Uses innovative and open systems technology to reduce overhead costs and provides the best solutions. Develops custom systems only when commercial solutions are inadequate.)
  - Defining and leading the USIGS development, to include defining operational, technical, and systems views of the USIGS architecture to permit organizations to share data, services, and resources.
  - Using partnerships with other U.S. and foreign governmental organizations, commercial organizations, and schools to leverage strengths and to share resources and the workload.
  - Developing policies to facilitate NIMA and USIGS activities. That support NIMA's goals to provide information at the lowest possible classification levels, to establish partnerships, and to purchase commercial products and services.

(4) Tasks

- Consolidates and deconflicts combatant commanders' GI&S requirements and priorities for approval by the joint staff and Assistant Secretary of Defense, C4I; then assign resources against those requirements for production and distribution.
- Provides a full range of GI&S data bases, products, and services to support missions identified by the joint strategic capabilities plan, while continuing to provide required essential support to navigation and flight safety.
- Maintains immediate crisis response capability to support major regional conflicts, peace

Downloaded from http://www.everyspec.com

operations, intervention, and humanitarian assistance operations.

- Coordinates with other agencies or civilian contractors for surge support for crisis or contingency operation production.
- Deploys command support teams at the request of DOD components to assist in support planning or execution of GI&S support.
- Maintains a command, Service, and agency liaison program; conducts frequent staff assistance visits in an effort to identify and satisfy DOD component GI&S requirements.
- Promotes unified, joint, combined, and coalition operations by adopting or promulgating GI&S standards within DOD, the Federal Government, and international military and civil standard organizations.
- Acquires and assesses foreign generated GI&S products and data bases for use by DOD.
- Acts as the primary DOD executive agent for purchases of satellite remote sensing data for the Services, combatant commanders, and defense agencies.
- Promotes joint GI&S operations and TTP development among the Services and federal agencies.
- Develops, maintains, and operates the national GI&S data library.
- Conducts or requests Service GI&S assets to conduct collection of conventional geodetic, satellite geodetic, astronomic, gravimetric, topographic, hydrographic, bathymetric, and geomagnetic data, as well as aerial cartographic photography.

b. Marine Corps Customer Support Team, NIMA

(1) Mission

The Marine Corps customer support team (COTM), NIMA, is the focal point for Marine Corps customer support and ensures GI&S requirements are identified and satisfied.

(2) Organization

The COTM is part of the NIMA customer support office. NIMA, Operations Directorate, controls the customer support office and NIMA's production resources.

(3) Responsibilities

- Understands and coordinates NIMA resources and support to meet Marine Corps needs.
- Assesses, defines, and tasks customer needs into NIMA production actions.
- Provides single point of accountability to Marine Corps for requirements satisfaction.
- Prioritizes Marine Corps needs into NIMA's business plans.
- Manages the execution of Marine Corps programs approved for development.
- Evaluates Marine Corps satisfaction with NIMA GI&S programs.
- Communicates and accounts to the Marine Corps GIMO for the level and quality of service provided.
- Provides feedback on status of Marine Corps production requirements.
- Provides GI&S production expertise to Marine operating forces.

c. NIMA Customer Liaison Officer

(1) Mission

NIMA's customer liaison officer (CLO) to the Marine Corps facilitates the exchange of imagery and GI policy and procedural issues; planning, programming, and budgeting issues; requirements management; and other activities of common interest.

(2) Organization

The CLO is assigned to the NIMA COTM but resides in the Marine Corps GIMO, MCIA. The CLO executes all tasks in coordination with COTM and the GIMO.

(3) Responsibilities

- Represents the Director, NIMA, within the Marine Corps GIMO and other Marine Corps commands.
- Establishes, conducts, and maintains liaison with HQMC, MARFORs, and other Marine Corps staffs.

Downloaded from http://www.everyspec.com

- Informs COTM and GIMO of activities, plans, and issues relevant to mutual organizational interests and responsibilities. This includes, but are not limited to, major changes in performance, operating policy, staffing, and daily operations. The CLO will ensure items of mutual interest are fully developed, well-coordinated, and effectively executed or addressed. In addition, the CLO coordinates activities and requests for support through COTM.
- Develops functional knowledge of Marine Corps responsibilities, missions, goals, needs, and requirements while enhancing NIMA's understanding and appreciation of Marine Corps operational capabilities.
- Coordinates with HQMC, MARFORs, MAGTFs, intel bn, subordinate commands, and other Marine Corps activities to enhance their understanding of NIMA's missions, functions, capabilities, responsibilities, and combat support operations.
- Provides the status of Marine Corps imagery, geospatial, and GEOINT requirements.
- Assists and trains Marine Corps customers in the imagery and GI product acquisition process.
- Coordinates with COTM, GIMO, and NIMA technical representatives on all issues that affect Marine operating forces.

d. NIMA Geospatial Technical Representatives

(1) Mission

The geospatial technical representatives (GTRs) train and work with the MEF intelligence personnel to integrate GI&S and future USIGS capabilities into the MEF operations. They also evaluate the use of GI&S and USIGS concepts and products supporting the MAGTF mission.

(2) Organization

The GTRs are an extension of the COTM and CLO collocated with the topo plt. The GTRs provide direct access to the NIMA geospatial libraries and support interoperability between the topo plt and NIMA GI. The GTRs execute all tasks in coordination with guidance provided by COTM, CLO, and the MEF GI&S chief.

(3) Responsibilities

- Serves as the focal point for NIMA GI&S activity within each MEF.
- Assists each MEF in the identification of GI&S requirements.
- Installs and maintains NIMA application software and new NIMA prototype and products as they become available; familiarizes topo plt personnel with the software application.
- Trains topo plt and MEF intelligence personnel in the use of NIMA data use and applications for planning and integration into organizational systems.
- Develops, maintains, and presents demonstrations of current and projected GI&S capabilities.
- Evaluates GI&S software and data and reports findings to COTM, CLO, GIMO, MEF, intel bns, and topo plts.
- Coordinates all actions affecting MAGTFs with COTM, CLO, GIMO, MEF, intel bns, and topo plts.
- Provides technical support for NIMA products used in MAGTF systems.
- Assists in development of TTPs for rapid generation of new data or intensification of existing data sets.
- Assists in technical reviews of developmental data sets, products, systems, and associated documents to ensure standard NIMA data is used and new GI&S products requirements are promptly identified.
- Assists the topo plt in the technical use of GI&S and USIGS products.
- Assists technically with the integration of NIMA's USIGS concept in MAGTF architectures and migration plans.

Downloaded from http://www.everyspec.com

Chapter 3

Planning

All aspects of MAGTF operations require the capability to plan for, receive, and visualize relevant GEOINT to assist the commander's planning and decisionmaking processes. Both GI and GEOINT must be timely, complete, current, geolocationally accurate, integrated, and deconflicted throughout all phases of an operation. This chapter serves as GEOINT planning guide to support MAGTF operations. It gives an overview of the planning process and explains the GEOINT roles and responsibilities in deliberate and crisis planning. It also defines the GI and GEOINT available to support the planning process. In addition, the chapter addresses sources of GEOINT and provides guidance on the identification and acquisition of GEOINT at various unit levels in a theater of operations.

Section I. Planning Process

3101. Marine Corps Planning Process

The MCPP helps organize the thought processes of commanders and their staffs throughout the planning and execution of MAGTF operations. It focuses on the threat and mission and is based on the Marine Corps warfighting philosophy of maneuver warfare. It capitalizes on unity effort and helps establish and maintain tempo. MCWP 5-1, *Marine Corps Planning Process*, provides detailed MCPP doctrine and TTP.

Performing the MCPP steps can be as detailed or as abbreviated as time, staff resources, experience, and the situation permit. It applies to command and staff actions at all echelons. Commanders and staff members from the Marine Corps component headquarters to the battalion and squadron level must master the MCPP to participate fully in integrated planning. In addition, the MCPP complements deliberate or crisis action planning (CAP) as outlined in the Joint Operation Planning and Execution System (JOPES).

The MCPP establishes procedures for analyzing a mission, developing and analyzing COAs against the threat and environment, comparing friendly COAs against the commander's criteria and each other, selecting a COA, and preparing orders for execution. The MCPP organizes the planning process into six steps (see figure 3-1 on page 3-2).

This planning process provides the commander and staff a means to organize their planning activities and convey the plan to subordinates and subordinate commands. Through this process, all levels of command can begin the planning effort with a common understanding of the mission and commander's guidance. Interactions among planners during the various steps ensures a concurrent, flexible, coordinated effort that efficiently uses time available and promotes information sharing.

a. Mission Analysis

As the first step in planning, mission analysis drives the MCPP. The purpose of mission analysis is to review and analyze orders, guidance, and other information provided by higher headquarters and to produce a unit mission statement.

b. COA Development

In this step, planners use the mission statement (which includes higher headquarter's tasking and intent) and their commander's intent and planning guidance to develop the COA(s). Each

Downloaded from http://www.everyspec.com

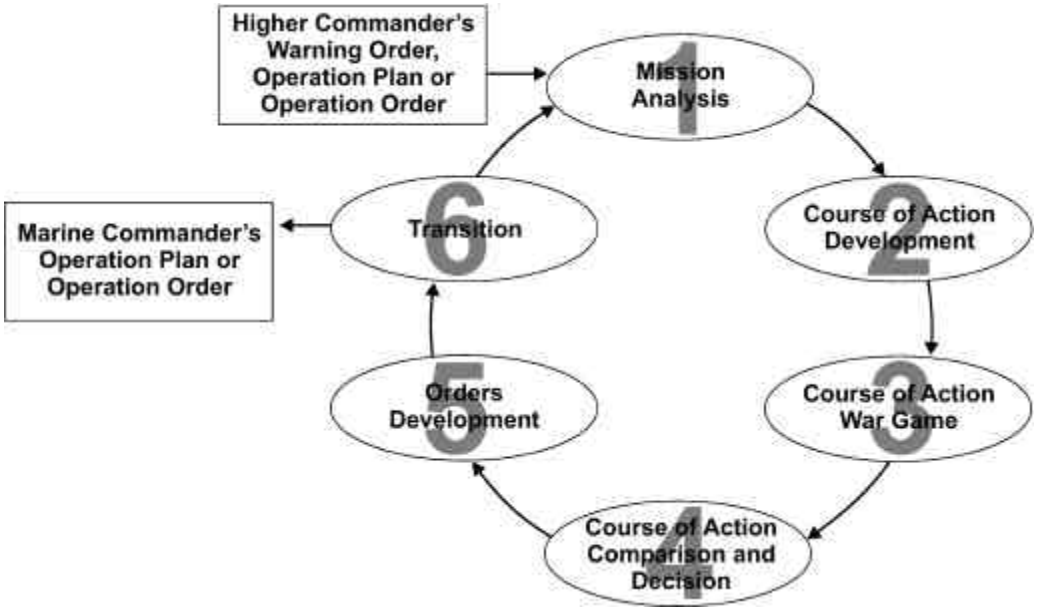

Figure 3-1. Marine Corps Planning Process.

prospective COA is examined to ensure it complies with the current and anticipated situation, the mission, and the commander's intent. Commander-approved COAs are then developed in greater detail.

c. COA(s) War Game

COA(s) wargaming involves a detailed assessment of each COA as it pertains to the enemy and the battlespace. Each friendly COA is war gamed against selected threat COAs. COA wargaming helps the planners identify strengths and weaknesses, associated risks, and asset shortfalls for each friendly COA. In addition, COA wargaming will identify branches and potential sequels that may require additional planning. Short of actually executing the COA, COA wargaming provides the most reliable basis for understanding and improving each COA.

d. COA Comparison and Decision

In this MCPP step, the commander evaluates all friendly COAs and selects the COA that he deems most likely to accomplish the mission. Each friendly COA is compared against established criteria and then against each other.

e. Orders Development

Using the mission statement and the commander's COA decision, intent, and guidance, the staff develops orders to direct the actions of the unit and supporting forces.

f. Transition

Transition is an orderly handoff of a plan or order to those tasked with execution of the operation. This step provides those who will execute the plan or order with the situational awareness and rationale for key decisions necessary to ensure a coherent shift from planning to execution.

3102. Joint Planning Processes

Joint Publication (JP) 5-00.2, *Joint Task Force (JTF) Planning Guidance and Procedures*, provides a detailed discussion of the joint planning processes.

a. Joint Deliberate Planning

The deliberate planning process is used by the joint staff and CINCs to develop plans in support of national strategy. The Joint Strategic

Downloaded from http://www.everyspec.com

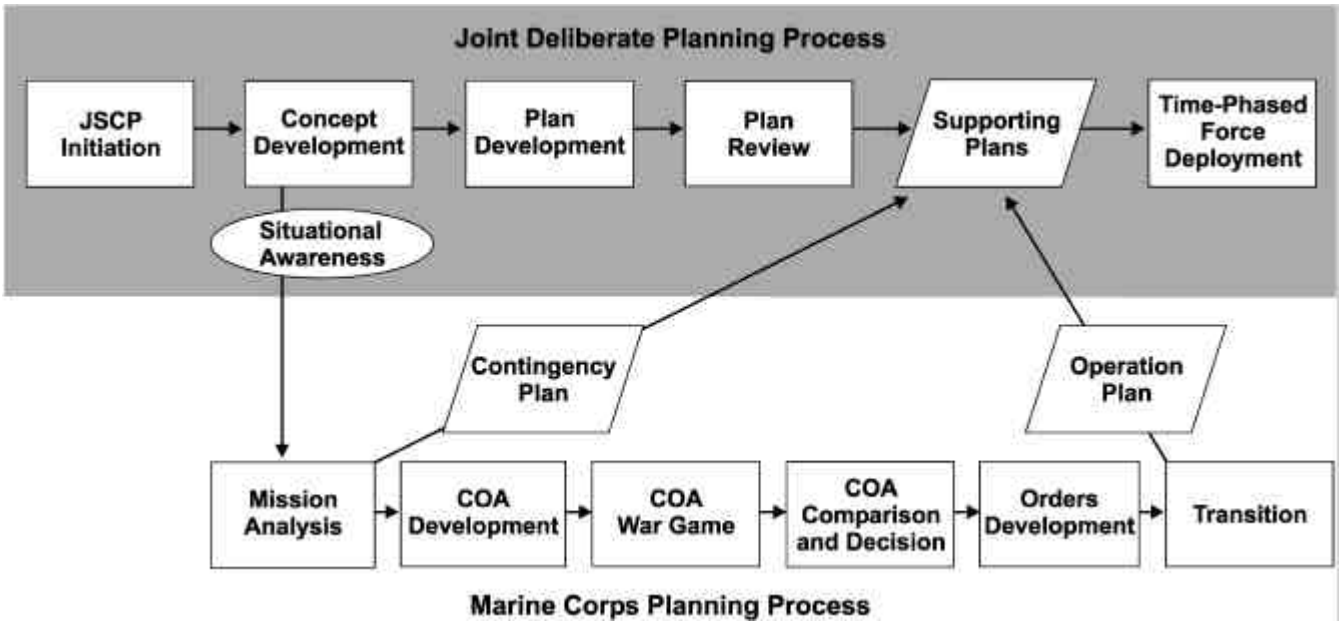

Figure 3-2. The MCPP and the Joint Deliberate Planning Process.

Capabilities Plan (JSCP) assigns forces and resources to the combatant commanders and their Service component commanders for use during deliberate planning. Figure 3-2 illustrates how the MCPP fits within and supports the joint deliberate planning process.

b. Crisis Action Planning

CAP is conducted when national interests are threatened and a military response is being considered. The time available for CAP planning at the national level may be as little as a few days. CAP procedures promote the logical, rapid flow of information and the timely preparation of campaign plans or joint OPORDs. Figure 3-3 on page 3-4 illustrates how the MCPP fits within and supports the joint crisis action planning process.

3103. Roles of GI and GEOINT in the MCPP

The emerging DOD and Marine Corps GI will support the MAGTF's requirements for accurate, high-resolution, mission-focused GI. GEOINT and GI in the planning process provides—

- Consistent and documented set of FD with near global coverage.
- FD intensification capability to meet specific mission information and intelligence needs.
- Consistent data quality information (positional accuracy, currency, completeness, correctness of attribution) to support more informed exploitation by users.
- Improved access to digital information using web-based technologies.
- GI interoperability across diverse systems and among coproducers.
- Robust analytical capabilities.
- Integrate and deconflict data capability from multiple sources.
- Tactical or exploit data from other providers adding capability to create tailored views.
- Additional information to support and enhance collaborative planning throughout the MAGTF.

Downloaded from http://www.everyspec.com

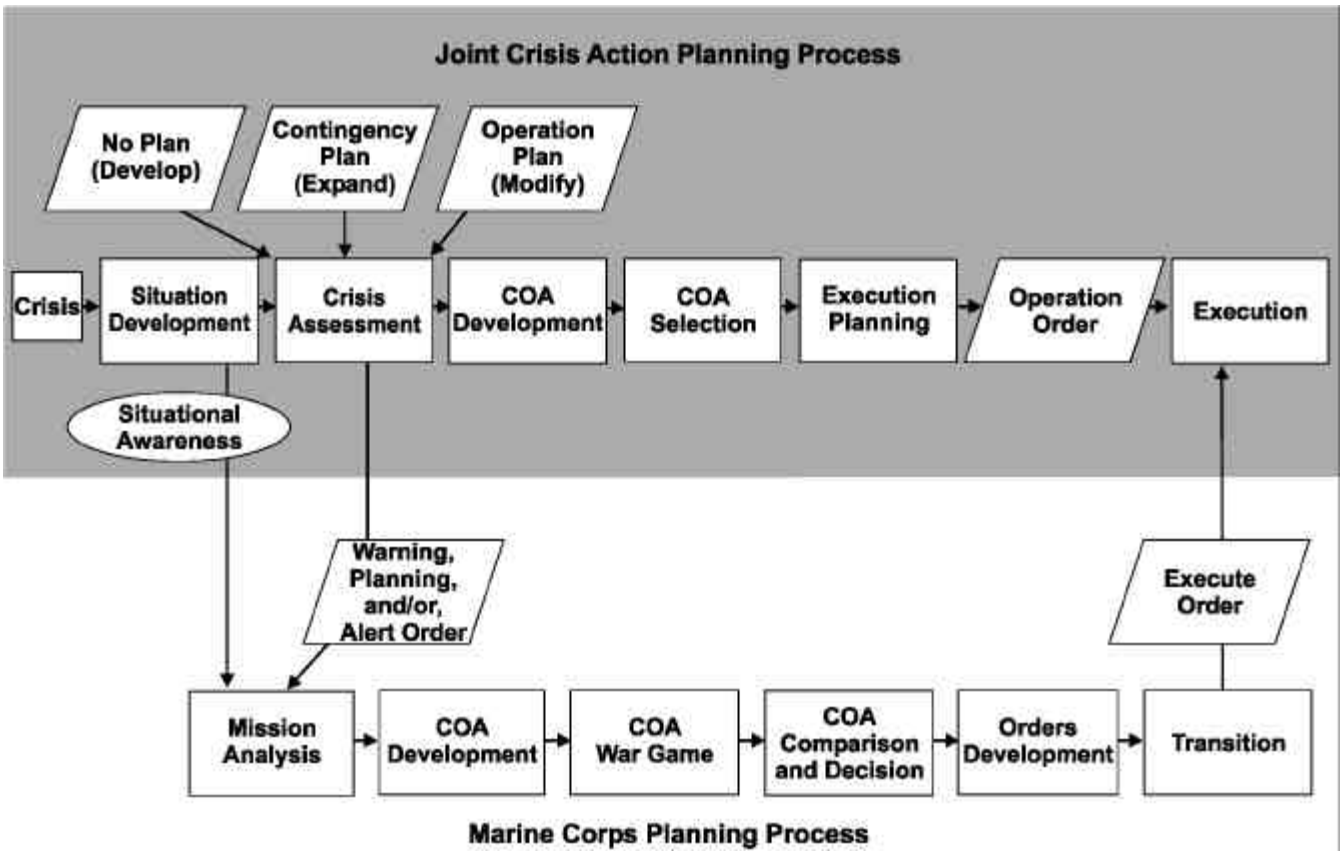

Figure 3-3. The MCPP and the Joint Crisis Action Planning Process.

3104. GEOINT Planning Considerations

a. Essential Elements of Terrain Information

During initial planning, GEOINT will identify gaps in EETIs that must be answered to complete an accurate view of the battlespace. These EETIs will help planners generate IRs for submission to the MAGTF intelligence officer. The CMDO and the MIO must identify tactical, theater or national sources to fill these EETIs and IRs. In many cases, the GI will also support a collaborative all-source GEOINT production capability able to support deployed forces EETIs and IRs.

b. Coordination Requirements

The MEF I&M section and intelligence battalion's topographic platoon, support cell, and P&A cell are the focal points for coordination of GEOINT and GI requirements. Coordination within the MEF command element must be established as part of the staff planning process. This coordination ensures GI and GEOINT identification, prioritization, analysis, collection, production, and dissemination is provided to all MAGTF elements. In addition, coordination within the Marine Corps GI supports collaborative planning and production.

c. Position and Navigation

The MAGTF must be prepared to conduct operations in air, land, and sea environments. During peacetime, MAGTF units and platforms must conform to applicable national and international agreements for controlled airspace, coastal, and inland areas. The MAGTF's position and navigation systems must have access to global GI coverage, effective real-time response, and common grid and map datum information and accuracy. Increased emphasis within urban environments

Downloaded from http://www.everyspec.com

will require more information content and resolution to provide a stable and accurate geospatial framework.

d. Preferred Geodetic Datum

A datum is any numerical or geometrical quantity or set of quantities which may serve as a reference or base to measure other quantities. In geographic terms, a datum is a mathematical model of the Earth's shape used as a basic reference to calculate position coordinates, heights, and distances and also to make maps. The datum is the origin or point of reference. Many countries have developed their own datums, which usually differ from those of neighboring countries. The DOD standard datum is the WGS-84. All NIMA products and data bases are, or will be, developed and built using this datum.

e. Global Positioning Systems

GEOINT is an integral part of every navigation, C2, mission planning, fire support, intelligence, weapons, and logistic operation and system. All must be linked by a common reference system. The default geodetic reference system used by the global positioning system (GPS) is the WGS-84 datum. In some operations, the mapping datum must be shifted to local datum (such as Tokyo datum) for combined or multinational support. When using the GPS system, the user must change the datum setting to ensure common coordinates are being reported amongst all forces involved in the operation.

f. Product Accuracy

The accuracy of both soft- and hard-copy GEOINT maps and other products depends on the scale, resolution, and sources used to produce them. This accuracy level must be considered when comparing map coordinates to those derived by GPS or high resolution imagery. NIMA's digital point positioning data base (DPPDB) is the only authorized source for deriving coordinates for precision weapons.

Downloaded from http://www.everyspec.com

Section II. Support to the Planning Process

Given today's nature of joint operations and the broad scope of operational and warfighting functional requirements, MAGTF GI&S and GEOINT operations, products, and services must occur early in the joint deliberate and crisis action planning processes to facilitate timely and effective force planning.

3201. Deliberate Planning

Deliberate planning is a longer-term, step-by-step procedure (see figure 3-4). The planning effort must be responsive to the commander's requirements and to the requirements of subordinate units and/or elements. The G-2 plans officer, MEF G-2 I&M section and intel bn must coordinate and share information with the intelligence officer, G-3, G-4, G-5, G-6, and all subordinate commanders. Deliberate planning requires—

- Commander's intent and guidance.
- Mission development.
- Commander's estimate and intelligence estimate (including the GEOINT estimate). See appendix E).
- Force list identification.

Figure 3-4. The Deliberate Planning Processes.

- Development of the concepts of operations and intelligence.
- Annex M (GI&S) to the supporting OPLAN or OPORD.

The G-2 plans officer, I&M section, the intelligence battalion, and the topographic platoon support the deliberate planning process by preparing for a possible contingency based on the best information and intelligence available. This effort relies heavily on the political and military circumstances that exist when planning begins. Conducted primarily in peacetime, the deliberate planning process can engage the entire DOD GI in the development of plans for contingencies. These contingencies are identified in MCIA-1586-001-97, *Marine Corps Midrange Threat Estimate—1997-2007: Finding Order in Chaos (U)*, and in other strategic and operational planning documents.

During deliberate planning, the G-2 plans officer, I&M and the ISC section work closely with subordinate command's GI&S representatives, appropriate combatant commander's and JTF GI&S officers, MCIA, and NIMA to develop a strategy for future operations GI&S and GEOINT support. All must be fully engaged in the five phases to the deliberate planning process. (Appendix F provides the MAGTF staff sections general guidance and considerations to aid with deliberate GI&S planning activities.)

The following paragraphs discuss GI&S and GEOINT planning from an integrated MCPP and/or joint deliberated planning process perspective.

a. Initiation

During phase I, the Services provide information to the supported commands on available GI&S-capable forces and GI&S requirements needed to support the plan. The Services accomplish this task by maintaining a current GI&S planning factors data base (PFDB). The PFDB provides planners with geospatial data requirements for all

Downloaded from http://www.everyspec.com

weapons, C2, CIS officer, and other systems. The PFDB also provides the G-2 plans, GI&S and GEOINT planners with an estimate of product quantities needed to support the forces. During this phase, the G-2 plans officer, I&M section and the ISC should carefully review the PFDB to ensure all units and weapons systems are included. It is also important to maintain a constant dialog with the appropriate NIMA customer support team to inform them of emerging plans or existing plans modifications.

b. Concept Development

During phase II, the supported commander's concept of the operation is developed and documented as part of the combatant commander's strategic concept. The combatant commander's staff prepares an alternative COA. During this phase, the G-2 plans officer I&M section and the ISC should conduct the following actions:

- Submit planning information to the primary staff to be included in the COA development.
- Work closely with all MEF sections and subordinate units' intelligence officers during the IPB process to provide input on available and required geospatial data.
- Prepare the initial GI&S estimate (see appendix E of this publication) and a GI&S concept of operations.
- Develop a preliminary geographic footprint (i.e., size) of the AO for the plan. Early AO determination is critical information for NIMA, GAB, and the topo plt to begin assessment of available GI&S source materials, data, EETIs, IRs, and production assets.
- Identify and receive combatant commander's (or JFC's) guidance on any datum issues. Although Chairman of the Joint Chiefs of Staff Instruction (CJCSI) 3900.01, *Position Reference Procedures*, establishes WGS-84 as the joint operations standard, this standard may not be achievable in the short term to support the plan. Many large-scale standard NIMA products still exist using other local datums. The production effort to change these products to WGS-84 may not be attainable in the near term. The GI&S section and the ISC must explain datum differences in detail to the MEF and subordinate commanders and staffs and their impact on operations. In addition, it must work closely with the combatant commanders, pertinent JTF commanders, and subordinate units' commanders to provide recommended COAs.
- Identify possible issues that may arise with the disclosure and release of limited distribution and classified GI&S products and data to multinational forces. The G-2 plans officer, I&M section and ISC must coordinate these issues with the combatant command and NIMA.

c. Plan Development

The commander's intent and guidance provides the basis for plan development by the MEF staff. During phase III, the staff develops annexes and appendices to the basic OPLAN. During this phase, the G-2 plans officer and ISC, assisted by the I&M section, should conduct the following actions:

- Determine existing shortfalls in GI&S coverage. In conjunction with the combatant command and pertinent JTF, determine a production strategy to eliminate or reduce the risk of those shortfalls. Also, determine the appropriate priority for the production or update of required geospatial data and products.
- Determine existing shortfalls in GI&S-capable and supporting forces in the MEF. This information is forwarded to either the HQMC or combatant command's GI&S officer for assistance.
- Develop Annex M (Geospatial Information and Services) to the basic OPLAN (see appendix G of this publication for example format).
- Update and produce Appendix 15 (Geographic Intelligence Estimate) to Annex B (Intelligence) and Annex m (Geospatial Information and Services) to the basic OPLAN (see appendix E to this publication).
- Assist the P&A cell OIC with development of Appendix 11 (Intelligence Estimate) to Annex B of an OPORD and the following tabs to Appendix 8: Tab A (Tactical Study of the Terrain), Tab B (Beach Studies), and Tab E (Helicopter Landing Zone and Drop Zone

Downloaded from http://www.everyspec.com

Studies). (See appendices H, I, and J of this publication for formats.)

- Ensure that MEF GI&S assets and products are included in the time-phased force and deployment list (TPFDL) to ensure proper movement of critical personnel, equipment, and GI&S data and products into the area of operations. For smaller MAGTFs or MEF MSCs, responsibility for building the TPFDL records rests with the unit's intelligence officer. Continuous coordination with the MEF G-2 and component and subordinate GI&S sections is required.

d. Plan Review

During this phase, a detailed analysis of the OPLAN supportability is conducted. The MEF may request the NIMA Marine Corps COTM and the GIMO to assist in the review. The G-2 plans officer, with the assistance of the ISC, topo plt and MSC GI&S representatives, conducts the following actions:

- Determine the appropriate level of readiness required for the plan. The likelihood of execution and calculation of preparation times is based on I&W. This assessment is forwarded to the combatant command for input to the final readiness level assigned to the OPLAN.
- Review the current status of topographic equipment, personnel, training, and MEF and MSC GI&S education and SOPs necessary to support deployment and execution of the OPLAN. Local unit training plans and SOPs will be modified as necessary.

e. Supporting Plans

This phase deals with mobilization, deployment, employment, sustainment, and redeployment of forces and resources in support of the concept described in the approved plan. During this phase, the G-2 plans officer and ISC should conduct the following actions:

- Ensure support planning identifies the quantity of supplies, equipment, distributive production support, and replacement personnel required to sustain and move the force into theater.
- Task subordinate units to determine their GI&S basic load and war reserve stocks (WRS).
- Task subordinate units to provide automatic distribution requirements to support basic load and planning stock requirements.
- Ensure subordinate units have included GI&S requirements (people, equipment, and products) in their time-phased force deployment data (TPFDD) records.
- Ensure subordinate units have included GI&S CIS requirements in their supporting plan.
- Determine locations for WRS storage and coordinate for facilities and maintenance plan. Maintenance of the WRS will be accomplished by either the CINC, NIMA, MEF CE, MAGTF CE or another Service component. The CINC's OPLAN will delineate responsibilities. In some cases, a memorandum of understanding (MOU) will be prepared to assign maintenance responsibilities.
- Plan to implement MAGTF reach-back GEOINT production support from the GAB and other sources if necessary.
- Coordinate formal agreements or MOUs to support other aspects of the GI&S plan. Examples include provisions for support from host nations, logistics and distribution support, and the role of multinational units in GI&S operations.
- Coordinate GI and GEOINT product disclosure and release issues so assigned multinational forces have access as required.
- Develop a plan for residual unclassified GI&S stocks that may remain in theater after operations cease. This plan may call for the stocks' destruction, turnover to host nation forces (once proper release and disclosure have been granted) or shipment back to theater or continental United States (CONUS) depots.
- Dispose of classified GI&S data and products in accordance with Department of Defense Directive (DOD Dir) 5200.1, *DOD Information Security Program*.
- Develop a plan for documenting lessons learned and implementing and ensuring all GI&S data, GEOINT, and products are scrubbed, validated, and posted to the GAB MCGIL.

Downloaded from http://www.everyspec.com

3202. Crisis Action Planning

The basic MCPP and joint deliberate planning process is adapted to execute operations in crisis situations. CAP procedures provide GI&S planners with an abbreviated process for determining GI&S support to a rapidly developing MAGTF operation where no deliberate plan exists or for quickly updating and developing an OPORD based on a previously developed OPLAN. Although all crisis situations cannot be anticipated fully, detailed analysis and coordination accomplished during the deliberate planning period will greatly expedite CAP. The requirements to plan GI&S support for crisis operations depends greatly upon the scope of the mission, how much can be adapted from existing deliberate plans, and the total time available for the CAP process in a given situation. In some cases, phases may be skipped. To better prepare for this eventuality, command GI&S staffs and representatives should create their own crisis GI&S planning checklists and regularly exercise them.

GI&S support planning for CAP should always begin with a thorough examination of relevant deliberate plans (see figure 3-5). CAP and execution are accomplished with a framework of the following six phases.

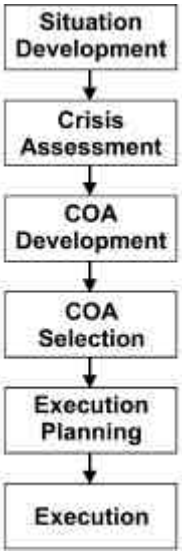

Figure 3-5. Crisis Action Planning Process.

a. Situation Development

Proper situation development demands staffs be able to provide immediate advice to commanders. The MAGTF I&M section and the ISC must be able to provide the principal staff with those GEOINT products, services, and data necessary for planning assessments. During this phase, a primary task of intelligence and GI&S planners is to develop a commander's situation assessment and GI&S estimate for GI support. This must provide current and accurate assessments of the command's GI&S preparedness to execute MAGTF operations in the AO. The MAGTF G-2 plans officer and I&M section should make this assessment in conjunction with the appropriate customer support team from NIMA. The following data and products must be assessed:

- Geographic footprint of the AO.
- GI&S requirements based on the mission, intent, IRs, concept of operations, and force structure. The PFDB can be used to determine what GI is needed by specific weapons, command and control, and other systems.
- Availability and currency of GI and GEOINT products. This requires off-the-shelf CONUS-available products and data or CONUS-based topographic assets and depots.
- Preliminary recommendation for GI&S-capable forces to be included in the MAGTF's task organization and the recommended C2 relationships.
- Initial CIS requirements estimate in coordination with the G-6. CIS is needed to transmit digital geospatial data between forward deployed units, CONUS production centers, digital data repositions, theater-level data servers, and to multinational forces.
- GI and GEOINT products to be developed or updated based on prioritized requirements and time available. The ISC must consider the use of interim products such as satellite image maps in lieu of topographic line maps (TLMs), and FD in lieu of MSDS. NIMA can assist in determining what data can be made available in the time required.

Downloaded from http://www.everyspec.com

b. Crisis Assessment

The G-2 plans I&M section and ISC continue to refine the MEF GI&S assessment completed in phase I. It begins to consider requirements for transporting and disseminating required geospatial data throughout the MEF. The crisis assessment phase ends with the commander's decision to develop COAs for consideration and possible use. The MAGTF G-2 plans officer, I&M section, and ISC are responsible for conducting the following actions during phase II:

- Coordinate with NIMA to ensure they are informed of pertinent guidance.
- Identify datum to be used for the operation.
- Coordinate with NIMA to place a hold on distribution of hard-copy products and AO digital media. This will allow GI&S planners to prioritize the distribution of the required data and products to the units involved in the immediate operation. Units obtaining 15 or fewer products for planning purposes will not be restricted by this delay.
- Coordinate with the JTF to develop and provide NIMA, subordinate and supporting GI&S staffs, representatives, supply units, and appropriate forces with special procedures to use when requisitioning products for the AO. Distribution limits and unit priorities must be established early to prevent depletion of stocks and to ensure priority needs are satisfied.
- Coordinate with the G-4/S-4 and G-6/S-6 early in the planning process to determine the effect transportation and CIS infrastructure status will have on deployment and dissemination for GI&S products, data, and GI&S production-capable unit operations.
- Coordinate with the MARFOR component and NIMA for GI&S personnel and equipment augmentation. NIMA has crisis response teams trained in requirements planning, GI&S production, distribution, and map depot warehousing operations. When requested by CINC, these teams can be deployed to theater. NIMA's DMS may provide technical assistance to joint forces. In addition, global sourcing of Marine personnel and equipment may be required to provide the MAGTF necessary GI&S support. The following questions should be answered when requesting staff augmentation:
  - What is the justification for the request?
  - What expertise is needed?
  - Where will teams be located?
  - When will the teams need to be in place?
  - What critical hardware or software deficiencies exist, and who needs these?
- Coordinate early GI collection and production priorities and activities with the G-2 operations officer, the ISC, the CMDO, and the P&A cell OIC. Coordinate with subordinate and supporting GI&S-capable units to include those units from multinational forces, other Service assets, and NIMA to accomplish critical actions while reducing duplication of effort.
- Coordinate with the G-2, G-3, and G-4 to identify GI&S requirements and/or requests from multinational forces. Coordinate requests for foreign disclosure and/or release with NIMA.
- Establish points of contact with multinational and subordinate forces for supply and receipt of GI&S products and data.

c. COA Development

Phase III implements the commander's guidance and commences development of the selected COA(s). The MAGTF commander analyzes each COA and provides recommendations to the JFC. This phase ends with submission of the commander's estimate, which includes the GI&S staff estimate. In this phase, the G-2 plans officer, the I&M section, and the ISC section coordinate with the JTF, subordinate units, and NIMA for analysis of each COA. Then the section determines the advantages and disadvantages of each COA from a GI&S perspective.

d. COA Selection

In phase IV, the MAGTF commander reviews and evaluates staff estimates and decides on a COA. Warning orders may be promulgated with sufficient detail to allow subordinate commanders to conduct detailed planning. The focus of the GI&S planning shifts to the selected COA.

Downloaded from http://www.everyspec.com

The following actions must be conducted:

- Review the GI&S planning checklist in appendix F of this publication for issues to consider.
- Ensure all subordinate GI&S personnel understand the organizational structures, command, support, and multinational relationships established for the mission. Brief subordinate forces and supporting command intelligence officers and GI&S personnel on key command and control relationships affecting their specific missions.
- Coordinate with the G-6 to finalize CIS support for the MAGTF CE, subordinate units, and supporting GI&S element. Ensure adequate communications bandwidth exists to transmit digital GI from GEOINT production elements throughout the MAGTF. Develop backup procedures for maintaining support to subordinate units if primary communications are degraded or disrupted.
- Ensure requests for GI&S personnel and equipment augmentations are formally submitted and track responses. Coordinate logistical preparations for receiving and supporting augmentees with the MAGTF headquarters commandant.
- Coordinate final personnel, systems, supply, and equipment requirements with the subordinate GI&S sections and representatives. Ensure these requirements are integrated within JOPES and the TPFDD.
- Resolve foreign GI disclosure and/or release policies. Finalize requirements to share geospatial data. Identify specific products or data to be shared with allied forces in Annex M of the OPORD. Inform subordinate GI&S personnel of procedures for handling disclosure and/or release of geospatial data to foreign nations. Coordinate with NIMA for support being provided to multinational forces through the United Nations or other international organizations.
- Obtain the status of the crisis production plan from NIMA and external supporting intelligence production centers to cover GI&S shortfalls.
- Coordinate intra-theater and intra-AO map depot establishment and dissemination requirements with G-4.

e. Execution Planning

Phase V begins with receipt of the alert, warning or planning order from the combatant commander or JFC. The approved COA is transformed into an OPORD. Detailed planning occurs throughout the joint planning community. The MAGTF commander develops the OPORD by modifying an existing OPLAN, expanding an existing concept plan, or developing a new plan. This phase ends with a decision to implement the OPORD. The planning emphasis during this phase shifts to focused GEOINT production and to transportation and dissemination requirements. The following actions must be conducted during this phase:

- Brief and coordinate continuously with subordinate units' intelligence and GI&S staffs regarding GEOINT priorities and ongoing operations.
- Finalize any remaining actions that were compressed due to the rapid development of the crisis situation.
- Revise, complete, and publish Annex M (Geospatial Information and Services) to the OPORD. Refine Appendix 15 (Geographic Intelligence Estimate) to Annex B of the OPORD.
- Ensure all subordinate GI&S personnel understand the MAGTF's and supporting units' GI&S support operations concept.
- Ensure C2 relationships have been defined and CIS plans developed for all MAGTF and supported units.
- Apprise the commander of the current status of GI&S capabilities and limitations and the status of crisis GI production.
- Brief personnel on the completed OPORD.

f. Execution

Once a COA is selected, the JFC issues an execute order to begin phase VI. The execute order directs the employment and deployment of forces, defines the timing for initiation of operations, and

Downloaded from http://www.everyspec.com

conveys guidance not provided in earlier CAP orders and instructions. This phase continues until the crisis or mission ends and force redeployment has been completed. If the crisis is prolonged, the process may be repeated continuously as circumstances change and missions are revised. If the crisis expands to a major conflict or war, CAP will evolve into planning for the conduct of the war. As soon as the deployment begins, the MEF G-2 plans officer and I&M section coordinate the deployment of requested GI&S augmentation of personnel and/or equipment to the theater. They also assist the ISC with developing GEOINT production guidance or all supporting GI&S and GEOINT organizations and elements.

3203. Collection Planning

Intelligence collection planning requires the G-2 plans officer and MEF I&M section to coordinate with the ISC and CMDO, and the G-3/S-3 future operations officer to ensure GI EETIs and IRs shortfalls are identified, prioritized, and included in the MAGTF collection plan. In most cases, the need for mapping imagery is critical to support intensification and value-adding of features and attributes within the TGIL as well as the development of other GEOINT products. Generally, to support amphibious operations, significant hydrographic collection support will be required. MAGTF collection assets will provide tactical information that supports identification and positioning of essential features and attributes to assist in populating the TGIL for tailored MSDS within defined targets and/or objective areas. When developing the GEOINT requirements for the collection plan, the GI&S planners must evaluate the following information:

- Type of units conducting the operation (e.g., infantry, long-haul truck, reconnaissance, aviation, civil affairs).
- Type of environment where the unit will be operating (e.g., urban, amphibious).
- Type of mission being conducted (e.g., raid, humanitarian, amphibious landing, maneuver warfare).
- Types of information and resolution necessary to support the mission (normally established in the unit and mission profiles).
- GI and GEOINT data base shortfall.
- Best available sources and prioritization based on the MAGTF commander's intent, commander's critical information requirements (CCIRs), and concept of operations.

3204. Processing, Exploitation, and Production Planning

The most critical factors in GEOINT processing, exploitation, and production planning are the commander's PIRs and the GEOINT production activities adjustments to keep abreast of changing conditions within the battlespace. This planning will require the ISC and I&M section to be engaged with the G-2/S-2, G-3/S-3, G-4/S-4, and G-5 to keep abreast of requirements and to keep the GEOINT production assets updated. The ISC has principal responsibility for coordinating with the G-2 operations and plans officer and the P&A cell OIC and topographic platoon commander to prioritize GEOINT and all-source intelligence production requirements. In addition, the ISC is responsible for ensuring the GEOINT production schedules are maintained to support MAGTF requirements.

3205. Dissemination Planning

The ISC must coordinate GI and GEOINT electronic and hard-copy dissemination with the G-2/S-2 dissemination manager, G-6/S-6, and other pertinent staff officers. CMDO will lead this effort. The topo plt will require access to support electronic dissemination requirements across the GCCS and MAGTF TDN.

Downloaded from http://www.everyspec.com

The ISC is responsible for—

- Identifying standard MAGTF GI&S product requirements prepared by NIMA or other external producers.
- Coordinating the prioritization of these requirements with the G-2 plans and operations officer and subordinate units' intelligence officers.
- Coordinating TPFDD development to transport the products with the MAGTF G-4/S-4 and supply officer for movement into theater.
- Coordinating CIS support by the CMDO with the MAGTF G-6/S-6 to ensure satisfactory connectivity and support.
- Coordinating the CMDO with the G-1/S-1 for limited hard-copy GEOINT products dissemination to subordinate units.
- Coordinating with the MAGTF G-4/S-4 supply officer for intra-theater and AO bulk distribution of GI&S products (e.g., maps) throughout the MAGTF using standard supply requisition procedures.

Downloaded from http://www.everyspec.com

Section III. GI and GEOINT to Support Planning

3301. Geospatial Foundation Data

Foundation data forms the base of the geospatial framework. It is one of the principal components of the DOD GI&S readiness strategy designed to meet joint and MAGTF GI&S requirements. Fusion of FD with other sources of GI will provide near worldwide coverage to support planning requirements independent of mission type or location. It provides specific accurate, standardized GI. This data is geopositioned to the WGS-84 standard DOD datum to provide interoperability and commonality across services, mission areas, systems, and forces. The basic components of FD can be fused to create a map-like view that is used for planning and some operations. FD will also support three-dimensional visualization and some analytic activities. In addition, FD serves as the base for densification and for integration of new categories of information. Normally, FD consists of the following information.

a. Digital Terrain Elevation Data, Level 2

Digital terrain elevation data, level 2 (DTED L2), is a uniform matrix of terrain elevation values. It provides basic quantitative data for all MAGTF systems requiring terrain elevation, slope, and/or surface roughness information. DTED L2 has a post spacing of approximately 30 meters (1 arc second) and provides the macro relief necessary to support most mission planning. The information content is approximately equivalent to the contour information represented on a 1:50,000 scale map.

b. Digital Bathymetric Data Base

Digital bathymetric data base (DBDB) was developed by the Naval Oceanographic Office. Distribution of this data base is controlled by the Navy. Depths are given in uncorrected meters (it does not include tidal references) for the post spacing of the data base. The bathymetric data is used for beach studies, contour charts, planning graphics, and digital displays.

c. Foundation Feature Data

Foundation feature data (FFD) is selected feature data (e.g., road, stream, lake), with some additional attribution arranged in relational thematic layers. Feature density depends on the specific geographic region; generally, it will look like a traditional TLM. FFD shows—

- Transportation and drainage networks.
- Geodetic control points.
- Populated places.
- Boundaries.
- Vegetation.
- Natural and cultural features of high interest.

d. Controlled Image Base

Controlled image base (CIB) is an unclassified data set of geodetically controlled, orthorectified, monoscopic imagery at a 5-meter resolution.

CIB supports—

- Various C2 and weapons systems.
- Theater battle management.
- Mission planning.
- Digital moving map.
- Terrain analysis.
- Simulation.
- Intelligence systems.
- CIS.

e. Digital Point Positioning Data Base

This is a classified, deployable set of geodetically controlled, stereoscopic imagery with associated support data. DPPDBs are developed by NIMA. It provides users the capability to derive accurate positional data for any identifiable feature within a specified area. The DPPDB requires specific software and hardware for exploitation.

Downloaded from http://www.everyspec.com

f. Qualified Data

Qualified data (QD) includes other data sets of known quality and accuracy that have not been integrated or deconflicted with FD and MSDS. NIMA standard digital products (see appendix A) are a core component of QD. Available national and international government data bases that satisfy identified requirements will be assessed and integrated as QD. The assessment will be based on established standards for accuracy, currency, resolution, content, and format.

A data source of growing importance to the MAGTF is commercially available products and data bases. Commercial geospatial production tools have opened the door to the wealth of GI worldwide. Those products and data bases with documented accuracy and quality that help to meet unfulfilled requirements can be procured and integrated to meet mission requirements. Value-added data collected by tactical units can be assessed and integrated as QD to support tactical operations.

3302. Geographic Intelligence

An FD analysis determines the intensification level required to develop the MSDS. The resulting MSDS forms the next layer of the geospatial framework. Each MSDS is developed by enhancing the information contained in the FD. This information includes high-resolution controlled imagery, elevation and/or bathymetric information, and high-resolution, heavily-attributed, vector features needed to meet defined mission requirements. Analysis and production of mission-specific GEOINT is conducted to support the following requirements.

a. Intelligence Preparation of the Battlespace

IPB is a systematic, continuous process and analytical method employed to reduce WET uncertainties for all types of operations. IPB builds an extensive intelligence products and data base for each potential area in which a unit may be required to operate. These are analyzed in detail to determine the impact of WET on MAGTF operations. That analysis is incorporated into graphic and other intelligence product forms. GEOINT provides a stable geopositional framework that supports the integration and analysis of WET effects on specific COAs.

GEOINT IPB data base support development is labor-intensive. It requires the dedicated efforts of topographic specialists and staff personnel, the direction and focus of the MAGTF staff, and the cooperation of numerous elements within and external to the MAGTF. GEOINT IPB support uses FD to define the AOI. Definition of the AOI is followed by efforts to intensify and value-add critical features within the AO. Further intensification of identified targets and objectives in the AO may occur to meet tactical requirements for lower echelon units. The primary function of GEOINT within the IPB process is to reduce the uncertainties regarding natural and manmade terrain features on MAGTF operations.

Military Aspects of the Terrain GEOINT focuses on the following military aspects of the terrain—key terrain, observation and fields of fire, concealment and cover, obstacles, and avenues of approach and mobility corridors (KOCOA).

(1) Key Terrain.

Key terrain is any feature or area in which the seizure or control of it offers a marked tactical advantage. Key terrain is echelon, mission, enemy, and situation dependent. Any terrain that increases or decreases the capability of either the friendly or enemy force to apply combat power may be key terrain. The same is true of terrain which permits or denies maneuver. Key terrain that has an extraordinary effect on mission accomplishment may be designated as decisive terrain. Mission accomplishment normally depends on the seizure or control of decisive terrain. Examples of key terrain include—

- Bridges.
- Fording sites.

Downloaded from http://www.everyspec.com

- High ground.
- Choke points.
- Road junctions.

(2) Observation and Fields of Fire.

Observation involves the influence of terrain on reconnaissance, surveillance, target acquisition, and direct fires capabilities. In an IPB context, it refers to optical and electronic (LOS). MAGTF systems including radios, radar, laser range finders, directed energy systems, electronic intercept and direction finders, jammers, and direct fire weapons require LOS to function effectively. Aided and unaided human vision from ground and air observers also requires LOS. Air defense target acquisition systems and weapons require LOS from their positions to the primary air avenues of approach. The anticipated target flight altitude relative to the adjacent terrain elevation also must be considered. LOS affects aerial systems from the aircraft flight route to the AOI forward limits. Generally, the effects of LOS on ground-based systems is limited to the immediate AO. The commander's ability to see the battlespace is influenced by the effects of terrain and weather on these systems.

Fields of fire involves the effects of terrain on weapons effectiveness. The effectiveness of direct fire weapons is heavily influenced by the terrain within the target area. These weapons require LOS to the target. Through LOS analysis, the topographic specialist determines how terrain affects optic and electronic LOS. LOS views can graphically portray these effects for various types of systems. A horizontal visibility view, or fields of fire view, combines the effects of vegetation and slope on LOS. When this information is portrayed graphically, the relative capabilities of direct fire weapons, communications, collection, and target acquisition systems becomes apparent. This view also assists in identifying key terrain with greater precision.

(3) Concealment and Cover.

Concealment is protection from enemy air, ground, and space observation. Cover is protection from the effects of weapon fire. Concealment is vital to operation security and deception. Both are vital for protection from hostile fire. Concealment and cover are closely related to observation and fields of fire. The GEOINT specialist helps determine the concealment and cover the terrain offers to both friendly and enemy forces.

Rotary-wing aircraft attempt to use terrain, smoke, and obscurants to conceal their activities from ground observation. These attempts include loitering on the reverse slopes of hills and using vegetation as a backdrop to enhance the aircraft's camouflage. High-speed, low-altitude, nap-of-the-earth flights enhance helicopter and fixed-wing aircraft survivability by reducing enemy ground force and air defense weapons reaction times.

Concealment is critical in the rear area. Vulnerable rear area C2 facilities, support units, and logistic facilities must be protected from enemy air and ground observation. Cover can be considered in terms of protection from enemy long-range weapons systems, its effect on the enemy security mission, and the protection it offers to enemy forces operating in the rear area.

(4) Obstacles (Natural and Manmade).

Obstacles are natural and synthetic terrain features that stop, impede or divert military movement. The impact of obstacles on mobility makes them an important consideration during production of GEOINT studies and all-source intelligence studies and estimates. The GEOINT specialist must also determine how obstacles affect air defense weapon systems and rear area combat and service support unit placement. The effects of weather on soil trafficability are also a primary consideration when obstacles are being analyzed.

(5) Avenues of Approach and Mobility Corridors.

Air and ground avenues of approach are routes by which a force may reach key terrain or an objective.

Downloaded from http://www.everyspec.com

Avenues of approach (AAs) are evaluated in terms of—

- Maneuver support potential (i.e., the size or type of force that may use an AA).
- Access to key terrain and AAs.
- Degree of canalization; concealment and cover.
- Observation and fields of fire.
- Obstacles.

Air and ground mobility corridors are subsets of air and ground AAs. Mobility corridors are areas within the AA which permit movement and maneuver. They permit friendly and enemy forces to advance or withdraw in doctrinal configuration and to capitalize on the principles of mass, momentum, shock, and speed. Identification and analysis of AAs and mobility corridors are essential to effective IPB development. They are key to integrating WET. They describe the area where projected enemy activity is likely to occur and dictate the routes an attacking force must take to their initial, subsequent, and final objectives. Enemy and friendly AAs are projected through the battlespace to known or expected objectives. The avenues are depicted and prioritized from the most to the least likely and are analyzed based on the largest enemy and friendly force they can doctrinally support.

b. Modified Combined Obstacles Overlay

The MCOO is an intelligence product used to depict the battlespace's effects on military operations. Normally, it depicts all mobility obstacles. In addition, MCOO may depict the following:

- Cross-country movement classifications (i.e., restricted).
- Objectives.
- AAs and mobility corridors.
- Defensible terrain.
- Likely engagement areas.
- Key terrain.

This information may be depicted using either traditional maps and overlays or an electronic GEOINT data base that renders within CIS resources the battlespace's effects on military operations. The MCOO is the framework for battlespace analysis and is the basic view of the battlespace area evaluation, GEOINT production, and weather analysis activities of the IPB process. Most other IPB products are based on this framework.

Although the MCOO is a graphic geospatial analysis, it differs from the other views within the IPB process. It presents information that is normally included on the combined obstacle overlay, the avenue of approach overlay, and the friendly operational graphic (i.e., friendly boundaries for the AO and AOI, objectives, and battle positions). The MCOO also depicts key terrain and known or potential enemy objectives. The MCOO is one of the two IPB templates or overlays (the other is the G-2/G-3 coproduced decision support template) that is normally prepared at all MAGTF command echelons.

The actual degree of detail depicted on the MCOO depends on the echelon where it is prepared, the command echelons it will support, and the time available for its preparation. The detail depicted on the MCOO also depends on the mission requirements, the type of unit preparing the MCOO and, most importantly, the commander's guidance. At a minimum, the MCOO will contain descriptions for—

- Severely restricted terrain.
- Restricted terrain.
- Built-up areas.
- Rivers and water obstacles.

Downloaded from http://www.everyspec.com

Chapter 4

Geographic Intelligence Operations

GEOINT describes the integrated air, land, and sea character of the battlespace. It includes analysis of natural and manmade features affecting military operations. The ability to use, understand, and exploit GEOINT can mean the difference between victory and defeat.

MAGTF maneuver requires accurate, current GI to support planning as well as intensification and analysis of that information to support operational and tactical maneuver. Effective employment of lethal and nonlethal fires relies on our force's ability to find and geolocate targets accurately, as well as to maintain C2 with the knowledge of friendly forces' locations within the battlespace. Force protection requires an understanding of vulnerabilities obtained through superior knowledge of the battlespace, to include the position of and potential threat from enemy forces. MAGTF logistic operations require a shared framework of GEOINT to provide locations and routes essential to planning and execution.

To effectively accomplish these warfighting functions, MAGTF GEOINT operations must provide rapid query, processing, analysis, production, and dissemination of all-source, tailored GEOINT to all MAGTF command echelons. High-resolution, mission-focused GEOINT provides the geospatial framework essential for a COP and CTP of the battlespace (see figure 4-1).

GEOINT supports every phase of a military operation. It must be considered during each phase to limit potential environmental effects on friendly forces while exploiting potential impacts to enemy forces. Terrain, inland and coastal waters, and weather factors are so interrelated that they must be considered together with intelligence on the enemy when planning MAGTF operations. Weather elements are capable of drastically altering terrain features and trafficability. Conversely, terrain features, such as mountains and ridge lines, exert influence on local weather and oceanographic elements. This relationship of terrain,

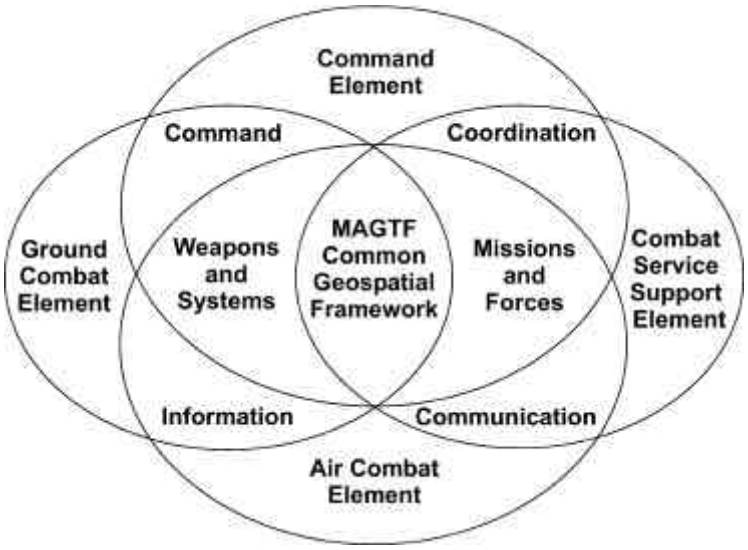

Figure 4-1. GEOINT Common Operational Picture.

Downloaded from http://www.everyspec.com

oceanography, and weather must be carefully correlated in all operations to ensure an accurate description of environmental factors pertinent to mission success.

The GEOINT concept of employment serves as a guide in the analysis, production, dissemination, and use of GEOINT. It defines and explains the requirements for integrating, deconflicting, and disseminating a seamless geographic framework for all types of missions. Full employment of GI and GEOINT is based on the following assumptions:

- Topo plt provides the MAGTF with the geospatial framework necessary for fusion of COP and CTP elements (e.g., friendly order of battle, enemy situation, logistical layout, weather).
- Increasing numbers of MAGTF systems requiring GI and GEOINT will continue to demand increases in GI functions and GEOINT applications and the time lines and detail of needed GEOINT. (See appendix L.)
- Geospatial foundation data will be available to support the defense information infrastructure and MAGTF mission requirements in a timely manner.
- GI and GEOINT reproduction and replication capabilities will be available to support MAGTF operational and tactical requirements for hard-copy products.
- Marine Corps and joint doctrine, tactics, techniques, and procedures and supporting operating forces' SOPs and theater TTPs will institutionalize and support collaborative and distributive development of GI and GEOINT.

4001. MAGTF GI&S Support

The MEF G-2, via the ISC and the I&M section, oversees the planning and direction, collection, production, and dissemination of GI and GEOINT to Marine units. It employs the intel bn, topo plt, task-organized elements (GISTs and GITs), and other supporting forces within each MEF to provide tailored support to all command levels. This includes virtual staffing or collaborative reach-back production employment to support all MAGTFs operations.

During garrison operations the I&M section is the focal point for assisting the G-2 operations and plans officers in developing GEOINT collection, production, and dissemination requirements, in validating GI and GEOINT requests, and in prioritizing the production requirements of organic and supporting topographic assets. The ISC, through key officers in the IOC, is the focal point for all GEOINT operations and activities during tactical operations. To establish and monitor the distribution production network and to maintain interoperability with supporting forces or agencies, the ISC and I&M section must have access to GCCS, INTELINK, JWICS, SIPRNET, and NIPRNET.

The following functional capabilities must routinely be maintained by the I&M section, intel bn/ISC, and other key intelligence personnel.

a. Staff Coordination

Comprehensive coordination with all elements of the MEF CE staff is necessary to ensure that requirements are identified early in the planning process. It must be ensured that frequent evaluation of current and future requirements are identified to support deliberate planning, crisis planning, as well as current and future operations. Comprehensive coordination includes—

- G-2 staff (operations and plans) and intelligence battalion elements (support cell, CMD section, P&A cell).
- G-3 staff (e.g., future and current operations, fires).
- G-4 staff (e.g., engineering, transportation, supply).
- G-5 staff future plans division.
- G-6 staff (e.g., CIS plans, systems control).

b. User Profile Development

The I&M section and ISC, with assistance from all command echelons' intelligence officers, is responsible for maintaining active PFDB user

Downloaded from http://www.everyspec.com

profiles for all units within the MAGTF. User profiles are established to identify the types of GEOINT products support each MAGTF unit and section requires. The profile identifies—

- Dissemination methods available to the unit.
- Types of views or products normally used and standard quantities needed.
- Communication links and information systems resources.
- Points of contact.

c. Mission Profile Development

The ISC and topographic platoon develop and maintain the mission profiles in the PFDB. The mission profile identifies the critical features and attributes necessary for a unit to conduct an operation. The profile will change as the unit's mission changes. Basic profiles are identified within the PFDB for easy access and modification to meet tailored requirements. When used in conjunction with the user profile, the mission profile will rapidly identify tactical forces' requirements for tailored GEOINT views and products.

d. Requirements Identification

IR identification is conducted at all levels of the MAGTF. IRs are forwarded through intelligence channels for validation, prioritization, and tasking. During garrison operations, the G-2 operations officer, with assistance from the MAGTF MIO, must validate, prioritize, and task all requirements to the intel bn for follow-on action by the topo plt or to the external distributive network for GEOINT production. During actual operations, the ISC is responsible for such validation, prioritization, and tasking consistent with the AC/S G-2's direction. In both cases, the topo plt commander is responsible to the P&A cell or the intel bn commander/ISC for quality control and for meeting production requirements time lines.

During peacetime operations, the topo plt prepares and provides a monthly GEOINT production report (see appendix K of this publication) to the intel bn commander and MEF G-2 I&M section via intelligence channels. This report identifies ongoing and completed operations. The MEF I&M section ensures production time lines and resources are prioritized and used adequately. During tactical operations, the topo plt and detachments prepare and forward this report to the ISC.

e. Production Prioritization

The ISC and the I&M section use the PFDB to develop the list of GEOINT production requirements necessary to support the mission. Coordinating with the G-3 and focusing on the commander's intent, they develop a list of production requirements, establish priorities, and set production requirement deadlines. To complete this function, information on the force list, TPFDL, and mission objectives is required. After the ISC prioritizes the requirements, he then tasks intel bn organic and supporting topographic assets to begin GEOINT analysis and production.

The ISC may request support from theater and national production assets via the operational chain of command. The distributive, collaborative production network will provide the MAGTF with enhanced production support and allow tactical topographic assets to focus on intensification of objectives for mission-specific views.

f. Data Base Management

The intel bn commander/ISC is responsible for providing oversight and management for the TGIL. This oversight includes identification of information requirements, production prioritization, view or product development, and CIS connectivity. The GIMO, MCIA, is responsible for TGIL and MCGIL data base design, specifications standards, and interoperability with joint and other Services' data bases. The topo plt commander is responsible for oversight of the production process within the platoon.

g. Dissemination Management

The IOC serves as the consolidated center for GI and GEOINT dissemination management. Following the priorities established by the MEF intelligence officer and coordinating with the G-2

Downloaded from http://www.everyspec.com

operations and plans officers and subordinate units' intelligence officers, the ISC's CMD section establishes the dissemination procedures and priorities for MEF GI and GEOINT. The client and server configuration within the TGIL provides the CMD section with easy access to a push and pull configuration within the GCCS and MAGTF TDN. Electronic and/or hard-copy media dissemination is tasked to organic topographic assets or distributive support facilities via the CMD section.

4002. Topographic Platoon Support

The topo plt provides an accessible GI and GEOINT data base to support all levels of the MEF. This data base provides MAGTFs with an integrated, intensified, deconflicted, and seamless GI and GEOINT framework. Development and sustainment of a common, near-real-time, integrated framework supports battlespace situational awareness, planning, and decisionmaking.

In conjunction with MCIA and the P&A cell, the topo plt will integrate, deconflict, and tailor a seamless geographic view of the battlespace. This view must be detailed enough to support tactical analysis and production. It will serve as the frame of reference for the fusion of information from other sources (i.e., environmental, logistical, operational, intelligence, and diplomatic). In addition, this information must support updates and modifications to meet the mission-specific requirements of a high tempo battlespace. Through the topo plt, the MAGTF will have access to theater and national GI and GEOINT sources for development of a CTP tailored to MAGTF missions.

a. Mission and Tasks

The topo plt provides tailored GI&S and GEOINT to MAGTFs and other commands as directed. To support MAGTF operations, the topo plt will—

- Provide tailored, mission-oriented topographic map products to supplement standard NIMA maps and charts.
- Coordinate with the MEF G-2, the ISC, CMD section, and rest of the P&A cell to collect, analyze, synthesize, and disseminate terrain information and intelligence.
- Prepare map substitutes such as overlays, overprints, photomosiacs, map revisions, and multicolor charts. Revise and reproduce combat charts, coastal charts, port charts, and harbor charts in limited quantities. Products may include electronic three-dimensional terrain models, line of sight studies, range fan studies, terrain factor overlays, hydrographic charts, landing zone studies, etc.
- Prepare coastal hydrographic surveys from the 6-fathom depth curve (or from where the Navy ocean survey ends) to the high-water line.
- Collect coastal data and prepare GEOINT products regarding trafficability, routes of egress, and inland water bodies.
- Prepare second-order horizontal and vertical geodetic and topographic surveys that encompass astronomic, geodetic, and satellite positioning (i.e., global precise positioning). Also prepare geodetic and magnetic azimuth surveys.
- Prepare or assist in preparing additional intelligence products, including those that depict cross-country movement, cover and concealment, observation and fields of fire, avenues of approach, flooding and drainage, stream and river gauging, lines of communications, and obstacles.
- Assist with all-source intelligence products preparation.

b. Mission Effectiveness Criteria

The topo plt's ability to perform the following functions will determine the GEOINT mission effectiveness:

- Collect, query, access, validate, receive, process, store, manage, integrate, exploit, intensify, analyze, visualize, produce, and disseminate all-source GI and GEOINT.

Downloaded from http://www.everyspec.com

- Develop, store, retrieve, display, and disseminate the geospatial framework at varying resolutions and data density to support COA development and mission planning.
- Prepare, store, retrieve, display, print, and disseminate tailored, timely GEOINT views (e.g., overlays with various resolution and data density) to support all MAGTF command echelons'—
  - Command and control.
  - Current and future operations.
  - Intelligence.
  - Logistics.
  - Engineering.
  - Aviation.
  - Communications and information systems.
  - Navigation.
- Exchange information across communication networks following GCCS, MAGTF, and joint maritime command information system (JMCIS) protocols and standards.
- Provide and acknowledge data receipt and delivery status in a client and server, smart push and pull configuration.
- Provide import, integration, deconfliction, and dissemination of available data from NIMA and other sources (e.g., vector product format, raster product format, text product standard, object-oriented grid, software applications, video formats).
- Produce and display two- and three-dimensional graphic GEOINT, imagery, and all-source intelligence models to support visual walk- and fly-throughs with a rapid terrain and feature identification capability. This capability enhances battlefield situational awareness and provides the baseline for data base analysis and production as well as MAGTF planning.
- Display, analyze, and generate stereoscopic GI images and import hard-copy products by scanning and digitizing.

c. Command and Control

The topo plt is a subordinate unit of intel bn's P&A company, with the intel bn commander maintaining full command of its operations through the company commander. When supporting smaller MAGTFs or MSCs, the topo plt or its detachments will operate under the C2 of either the intel bn detachment OIC or the supported unit's G-2/S-2.

(1) MEF CE Staff Cognizance

The MEF commander will exercise C2 over the intel bn elements, to include the topo plt , via the MEF AC/S G-2. The AC/S G-2 in turn exercises this authority via staff cognizance of the ISC. This allows for the effective centralized direction and effective integration of topo plt operations with other MEF GEOINT operations and the broader all-source intelligence operations.

(2) Support Relationships

(a) General Support

The topo plt will typically operate in general support of the MEF. Under general support, the MEF commander, through the AC/S G-2 and his ISC, determines priorities of intelligence collections and production activities and support; the task organization and locations of GEOINT support nodes; and GEOINT and all-source intelligence dissemination. The ISC in turn exercises C2 of topo plt via the P&A cell OIC.

(b) Direct Support and Attached

Depending upon METT-T considerations, the topo plt or its elements may be employed in direct support of or attached to a particular unit or MSC/MSE of the MEF. Such support relationships may be used to focus GEOINT support to a subordinate commander for a particular phase of an operation or to create enhanced GEOINT or all-source intelligence nodes in support of subordinate elements or units.

Direct support or attachment may consist of placement of topo plt assets (e.g., a GIST or GIT) with the supported unit, dedicated GEOINT production support or simply establishing an GEOINT node to provide direct dissemination of GEOINT to the supported unit's intelligence section or current operations center. In the latter

Downloaded from http://www.everyspec.com

relationship, a topo plt liaison element may be employed to assist the supported unit.

When direct support or attachment is used, the scope of the supported commander's C2 authority over assigned topo plt elements will usually be specified to ensure effective support to his operations while allowing the MEF commander to maintain effective C2 of broader intelligence and GEOINT operations. The supported commander will exercise this authority via his intelligence officer. Whenever possible, continuing relationships between GEOINT elements and supported units should be established in order to develop cohesion and refine integrated SOPs.

d. Concept of Employment and Task Organization

A single topo plt is capable of supporting simultaneously three MEU(SOC)s and special purpose Marine air-ground task forces (SPMAGTFs) in addition to the MEF. Topo plt elements can be task-organized into GISTs or GITs to support smaller MAGTFs, MSCs, or other designated forces. The intel bn command configures GISTs and GITs according to the G-2/S-2 priorities in order to support MAGTF-wide operational requirements. These teams provide tailored GEOINT support during operations.

(1) MEF

Support will be provided by the entire topo plt (to include possible reinforcement/global sourcing from other MEFs' or Marine Corps resources)

(2) Division, MAW or FSSG

Generally, support will be provided by a GIST. A GIST consists of two to six geographic intelligence specialists.

(3) MEU or SPMAGTF

Support typically will be provided by a GIT. A GIT generally consists of two geographic intelligence specialists.

e. Distribution and Production Systems

The concept of employment and task-organization is capable of using a distributive production network within the MAGTF to smartly push GEOINT down to multiple levels of the command. The Topographic Production Capability (TPC) is a network of geographic information systems (GIS) that provides the topo plt with the capability to support the MAGTF with near-real-time direction, control, and coordination of MAGTF GI and GEOINT production operations. Full TPC operational capability is projected for the year 2001.

The TPC is capable of accessing NIMA, theater, MCIA, and other Services' GEOINT production centers. (See figure 4-2.) During garrison operations, the topo plt will maintain all TPC equipment and personnel to standardize training and maintenance requirements. With the modular design of the TPC, the topo plt's organizational structure and support detachments can be modified to provide distributive and collaborative production support to MAGTF operations. For example, GISTs support to MSCs and other forces with either dedicated or tailored support from a consolidated production center. (See appendix D to this publication for additional information on the TPC).

The following major systems comprise the topo plt's production and analysis network:

- Geospatial information and replication system (GIRS) is organic to GITs attached to a MEU(SOC) command element.
- Digital Terrain Analysis Mapping System (DTAMS) is organic to GISTs supporting MSCs and/or to other topo plt elements (e.g., a topo plt element supporting the G-2 intelligence plans team supporting the MEF future plans element.)
- TOPOSET is located with the MEF CE within topo plt's area within the P&A cell.

Downloaded from http://www.everyspec.com

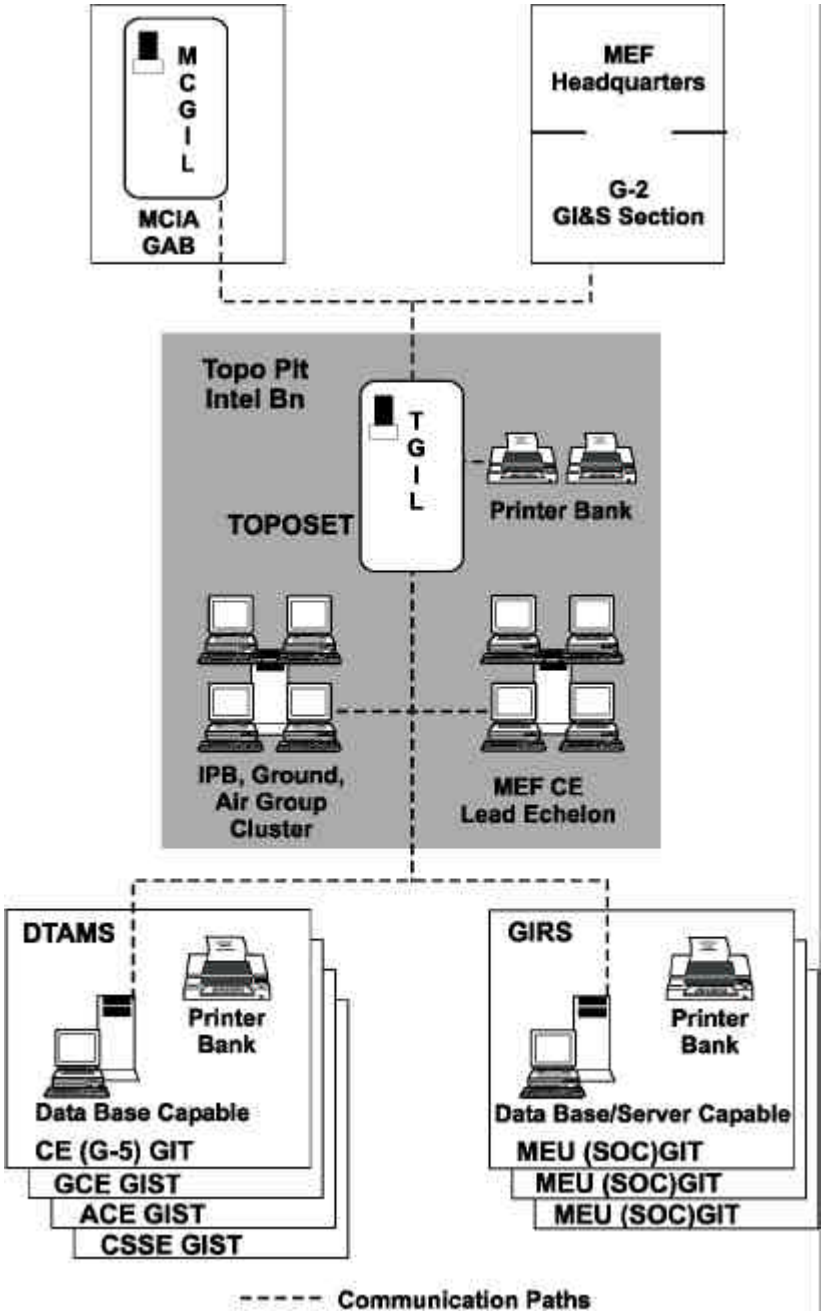

Figure 4-2. Topographic Production Capability.

f. Communications and Information Systems Configurations

Topo plt Marines and equipment can be employed to perform a variety of missions while remaining fully integrated with naval systems and forces afloat as well as joint, supporting, and allied forces within and external to the joint operating area. Using a client and server design, topo plt connects to GCCS, JMCIS, and the MAGTF TDN. The highly modularized nature of the topo plt and its equipment provides a flexible, wide range of employment options. The options depend on the MAGTF mission, the threat, operating environment, and other mission, enemy, terrain and weather, troops and support available-time available (METT-T) factors.

Downloaded from http://www.everyspec.com

(1) MEF

Normally, the entire TOPOSET, with the full client server, will deploy with a MEF. To support the MEF CE's lead echelon, four to six geographic intelligence specialists with a single cluster (i.e., multiple workstations) from the TOPOSET can be deployed.

(2) MSC

A GIST and a single DTAMS will generally deploy with an MSC. GIST GEOINT capabilities parallel those of the TOPOSET.

(3) MEU(SOC) or SPMAGTF

A GIT with a single GIRS will generally deploy with a MEU(SOC) or a SPMAGTF. GIT GEOINT capabilities parallel those of the TOPOSET and DTAMS.

4003. MCIA Support

MCIA develops prepositioned GEOINT data bases to provide tailored views, mission-specific intensification for intelligence areas of interest, nonstandard views for future operations, and GEOINT and all-source product development. With direct access to the national production network, MCIA can support GEOINT requirements for specific MAGTF missions across the full range of operations.

In addition, MCIA provides virtual reach-back support to deployed MAGTFs. It also supports the distributive and collaborative production network with tailored, mission-intensified views within the littorals. This includes the integration, intensification, and distribution of tailored amphibious views to support MAGTF expeditionary operations. Further, MCIA maintains the MCGIL to provide prepositioned data bases to deploying forces.

The MCGIL is a global littoral data warehouse connected to multiple communication networks for easy query, retrieval, and processing by topographic assets. It provides standard and nonstandard GEOINT views based on user requirements. In addition, MCIA provides a Service-level GEOINT production capability focused on future requirements for—

- Integration of diverse data sets (e.g., national, commercial, scientific, academic).
- Deconfliction of information content.
- Intensification of MAGTF-specific features and attributes.
- Analysis of environmental factors.
- Storage of information in the MCGIL to support MAGTF deployments.

4004. Geospatial Analysis Branch Support

Emerging Marine Corps operational concepts require an integrated, deconflicted, and seamless view of the battlespace that is capable of being operated from a variety of ships and command posts ashore. Under these concepts, various elements will provide virtual staff and reach-back support. Some elements may remain sea-based, while others will go ashore to better support MAGTF maneuver, sustainment, and other operations. Within the context of a support structure, the GAB, MCIA, provides a Service-level production and repository for GI and GEOINT.

The GAB provides the operating forces access to the national network. It also provides expeditionary support to forces conducting deliberate planning for contingency and operational plans, expeditionary training and exercises, and intelligence production requirements. GAB provides a ready source of GI and GEOINT focused on the global littoral environment by integrating the land, air, and sea GI and GEOINT that expeditionary forces require. During crisis support, GAB can support MAGTFs in a virtual staffing and reach-back mode by providing emphasis on GEOINT production requirements. GAB is focused on supporting Marine Corps geospatial interests within the world's littoral environment.

Downloaded from http://www.everyspec.com

All requests for GAB support will be submitted through intelligence command channels to the Director, MCIA, (attn: Operations Officer). Support to deployed MAGTFs under CINC or JTF operational control must be submitted via the operational chain of command and validated by the combatant commander prior to submission to MCIA. Prior identification and coordination of production requirements with the GAB is recommended.

4005. National Production Network Support

The GAB is the Marine Corps Service-level participant within the national production network (see figure 4-3). This network is a distributive, collaborative production infrastructure that supports the planning, prioritization, and development of GI and GEOINT based on production standards and specifications. It allows the MEF's topo plt to receive GI and GEOINT data sets supporting a defined mission area using a single query into the network.

The network consists of, but is not limited to, the following:

- NIMA.
- Defense Intelligence Agency (DIA).
- Central Intelligence Agency (CIA).
- National Reconnaissance Office (NRO).
- Civil, academic, and Service production centers. (e.g., the National Ground Intelligence Center).

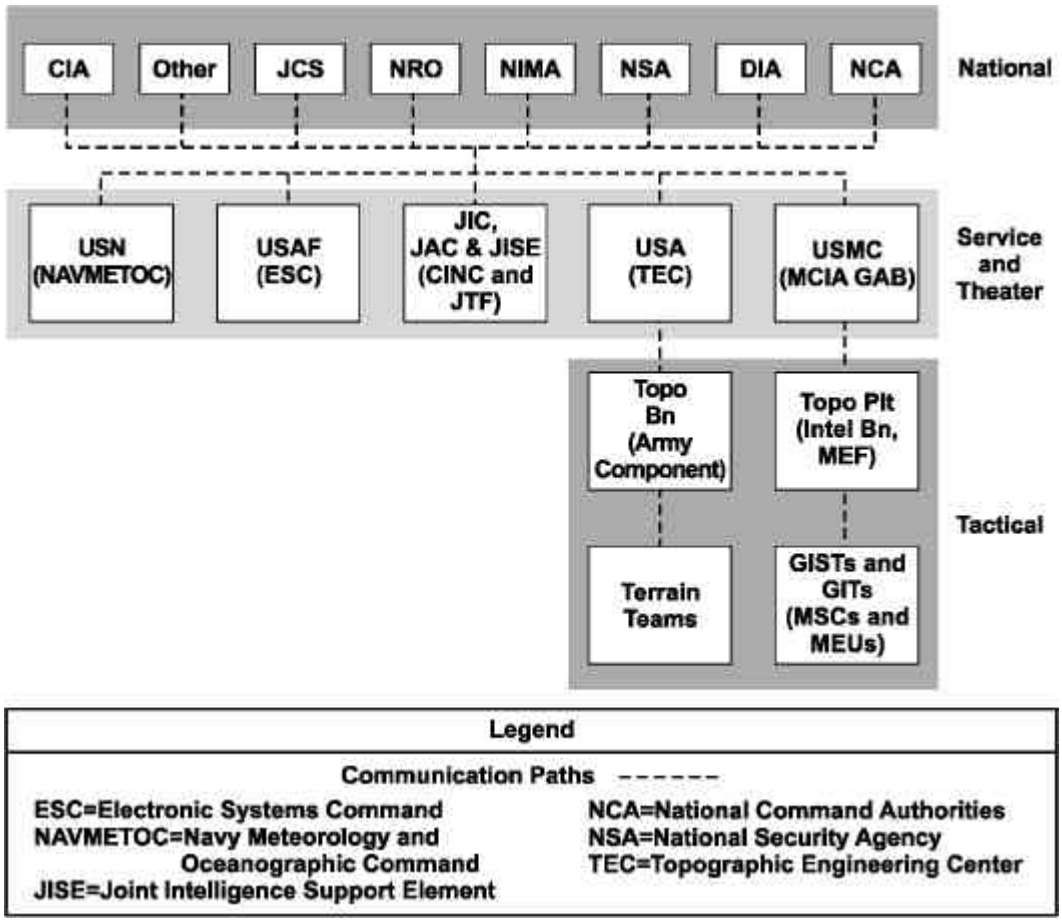

Figure 4-3. National Production Network.

Downloaded from http://www.everyspec.com

4006. Support to MAGTF Operations

During operations, topo plt provides the MAGTF with the ability to integrate and deconflict GI and to develop a seamless GEOINT data base for the framework of a COP and CTP and other planning and decisionmaking needs. Organic topographic resources can be task-organized to perform a variety of GI and GEOINT missions while remaining fully integrated with naval systems, forces afloat, and joint and allied forces. Virtual staffing and collaborative reach back provide a robust production capability, reducing the deployed footprint. Topographic assets aboard naval ships en route to the objective area are used primarily for planning and data base development. Software applications and collaborative production will help with battlespace command and control planning, terrain and weather effects analysis, visualization, and logistics planning. In addition, they will help develop the COA and COP framework.

a. Operational Maneuver From the Sea

The conduct of amphibious operations requires detailed studies of a littoral area's terrain, inland and coastal hydrography, weather, and other environmental factors. These environmental conditions are analyzed for their effects on—

- Potential beaches, HLZs, and DZs.
- Tides.
- Beaching and unloading conditions.
- Speed of vessels.
- Air support and visibility.
- Beach trafficability.
- Ingress and egress obstacles and routes.

Operational maneuver from the sea (OMFTS) uses the sea as maneuver space to rapidly support the landing force's maneuvers from ships to objectives ashore. Excessive seas and swells, hidden reefs, and marshes behind the beach may impede or jeopardize the entire operation. GEOINT provides the detailed geospatial framework critical for integrating and deconflicting a seamless land, air, and sea operation within the littorals.

Generally, a task-organized topo plt detachment will be provided to forward deployed MAGTFs. For example, in most cases, a GIT deployed with the MEU(SOC) CE S-2 will provide the MAGTF with the geospatial framework necessary to support each phase of the mission. Within OMFTS, the GIT will be supported through distributive, collaborative production cells in a reach-back mode (e.g., back to the parent intel bn and MCIA's GAB). This CONUS-based, reach-back capability will support the planning and direction, collection, integration, analysis, production, and dissemination of the geospatial framework GEOINT and forward it to the GIT. The GIT will integrate and analyze it and other tactical information and intelligence to support the MAGTF's objectives and IRs. The reach-back assets and GITs operate in a distributive production mode that reduces the equipment and personnel necessary to support deployments.

b. Sustained Operations Ashore

Sustained operations ashore (SOA) are extended operations in which a MAGTF fights predominately as a land force with naval and other support. MAGTF operations in a SOA situation will require a subsequent buildup of MAGTF capabilities ashore and establishment of a MAGTF area of operations. The SOA force size will usually require that the MAGTF use several geographically separated sites for logistic points, airfields, port facilities, and other purposes.

The complexity and demands of operating in a SOA environment often requires that the MAGTF employ a full topo plt. In this scenario, topographic assets may operate as multifunctional GEOINT nodes afloat and as specialized GEOINT nodes ashore. Principle topographic nodes (i.e., GISTs and GITs with networked TOPOSET, DTAMS, and GIRSs) will be located within the MAGTF AO based upon METT-T and the intelligence concept of operation to provide direct support to MAGTF forces ashore.

Downloaded from http://www.everyspec.com

Some topographic nodes will be forward deployed. These forward-deployed nodes will conduct and coordinate geospatial data base management, battlespace COA and tactical decision aid and visualization support, as well as terrain analysis production functions. Other principal nodes located elsewhere will orchestrate the fusion, integration, value-adding, and intensification of GI and GEOINT production and support to all-source intelligence production in general support of the MAGTF.

By adding modules and personnel, these nodes can support increased mission requirements. For example, a specialized node ashore within the ground combat element (GCE) headquarter's intelligence section can provide direct support to GCE operations while concurrently a robust node within the MAGTF CE intelligence section afloat can operate in general support of the MAGTF.

The topo plt's ability to organize to meet mission requirements allows for the exchange of high volumes of information and GEOINT with CONUS-based and other external production facilities. This exchange creates a common geospatial framework covering all MAGTF missions. Within the MAGTF, the task organization and likely dispersion of topographic assets will require the establishment of a centralized management element with a TGIL within the MAGTF CE's IOC. This functional element would facilitate GEOINT flow both within the theater and to CONUS-based, reach-back support facilities.

c. Military Operations on Urbanized Terrain

Military operations on urbanized terrain (MOUT) require an accurate, detailed understanding of the battlespace for planning and executing operations. Knowledge of the key characteristics of urban areas is also important in the conduct of civil affairs, intelligence, CIS, logistics, and force protection operations. The amount of detail required in urban GEOINT necessitates a substantial intelligence collection and production effort.

Urban GEOINT analysis and production consists of acquiring data and developing focused products on individual aspects of the area's—

- Terrain (physical composition, vulnerability, accessibility).
- Productive capacity.
- Military resources.
- Road and communication networks.
- Water and sewer systems.
- Building structures and layout.
- Cultural centers.
- Physical dimensions.
- Geographic location.
- Economic and political importance in the national structure.

4007. Predeployment Requirements

Upon receipt of a warning order, several processes begin concurrently and are interdependent. Functions may be separated by command levels and by differing MAGTF, naval, and JTF GEOINT requirements. Intel bn and G-2 personnel should use the GI&S planning checklist (see appendix F) to ensure that all areas of support are addressed during advance force and preassault operations. This ensures all GEOINT operations and production requirements are identified and prioritized to support the various missions within the operation.

a. Planning Requirements

IPB is the principal analytical methodology employed to reduce enemy and environmental uncertainties for all operations. By analyzing the effects of the battlespace on both enemy and friendly forces, GEOINT provides the framework for the IPB process and critical support to all-source intelligence assessments (see figure 4-4 on page 4-12).

Downloaded from http://www.everyspec.com

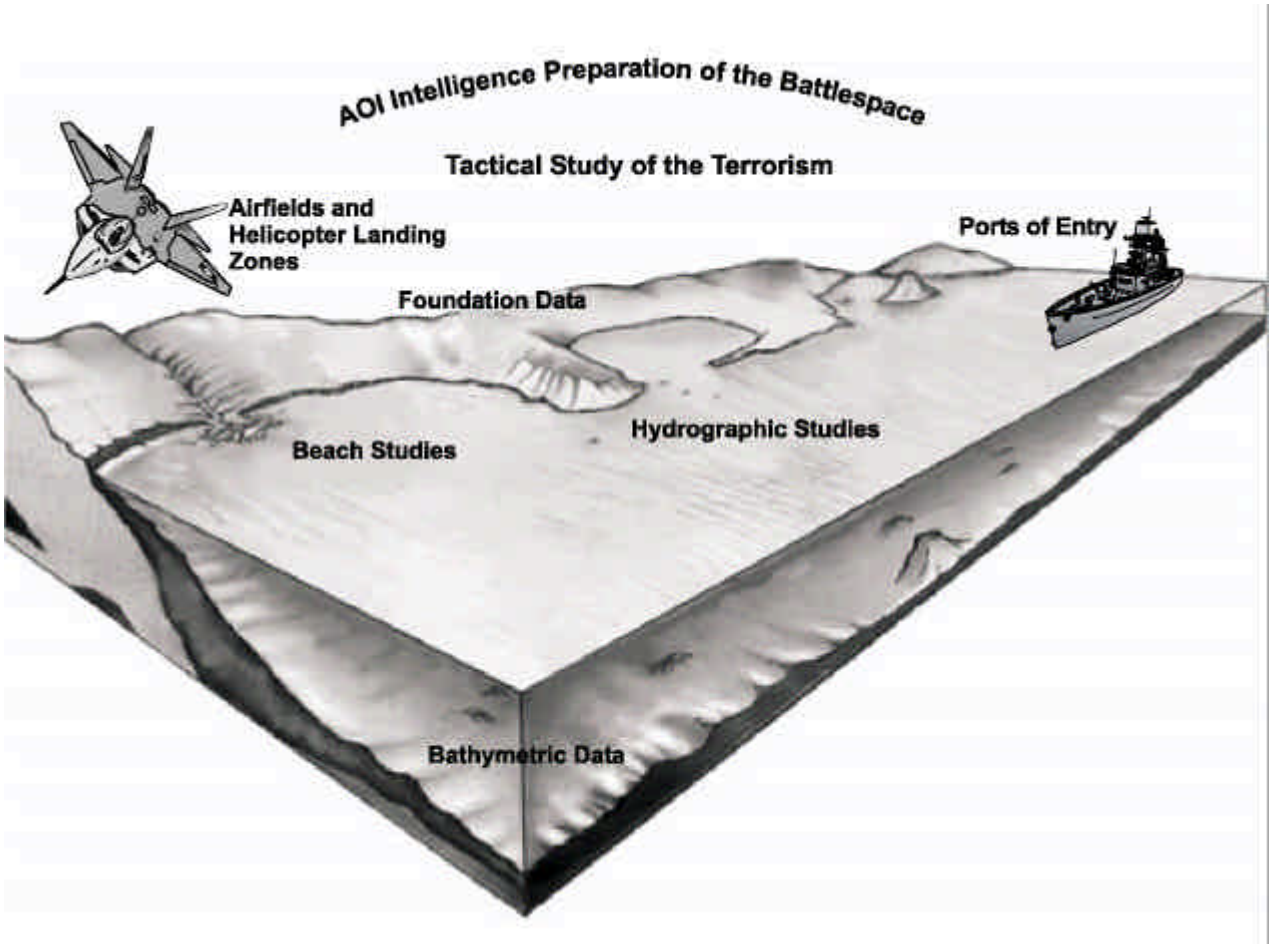

Figure 4-4. MAGTF GEOINT Planning Requirements.

The following five GEOINT functions support the IPB process:

- Defining the battlefield environment.
- Analyzing military aspects of the terrain.
- Providing the framework for integrating threat COAs.
- Analyzing effects of terrain on specific COAs.
- Supporting visualization of COAs for wargaming and rehearsals.

b. Product Requirements

To support initial MAGTF planning needs, the following types of GEOINT products are generally required to conduct mission analysis, situation development, and COAs development, analysis, and wargaming. Initially, the topo plt will query local, Service, and national networks for all available GI and GEOINT within the AO and AOI. Then it begins the process to intensify and generate the following tailored views to support all MAGTF operations. In most of these cases, however, GEOINT products are fused with other intelligence to create all-source intelligence products.

(1) Foundation Data

FD provides an initial level of information resolution (normally equivalent to medium scale maps) to allow planning to begin. It provides the MAGTF with an overview of the AOI to begin identification of mission specific data requirements. FD will support some missions without intensification, but for most MAGTF operations, the ISC will task topo plt for production of

Downloaded from http://www.everyspec.com

tailored views to support MAGTF tactical operations within the AO. FD is the sole product listed in this section that is a GEOINT pure intelligence product.

(2) MSDS

The topo plt must integrate and intensify specific objective or target areas within the AO to generate tailored MSDS views for tactical forces. MSDS may range from simple road networks for the MAGTF CSSE to a detailed TLM for an infantry platoon conducting patrols. The information content of the TGIL must support an end-user's ability to pull individual coverage layers or an integrated view based on the commander's preference and mission.

(3) Tactical Study of the Terrain

The topo plt must analyze the AO GI to determine effects to planned missions and enemy capabilities. This analysis supports both the MAGTF CE and subordinate commands, although each echelon may require different resolutions of the analysis. Initial production requirements are focused on the IPB process to support COA development and analysis by the CE.

Analysis of the AO is accomplished through comprehensive study to determine the effects of the terrain on both enemy and friendly operations. Analysis of weather, terrain, and other factors throughout the commander's AO and AOI serves as a basis for developing specific MAGTF COAs and for determining enemy capabilities in support of commander's and staff's estimates. The study allows commanders and planners to see the battlespace in width, depth, height (airspace), and time dimensions. The P&A cell will produce Tab A (Tactical Study of the Terrain) to Appendix 11 (Intelligence Estimate) to Annex B (Intelligence) to an OPLAN. See appendix H of this publication for the format and an example of a tactical study of the terrain.

(4) Beach Studies

Beach studies are a comprehensive effort to determine the environmental effects of the terrain, coastal ocean, riverine, and weather effects on beaches. Each beach study is analyzed with respect to the environmental effects on a specific point within the littoral. A beach study could include traditional beaches, rivers or any suitable place capable of supporting the force using it.

A beach study includes critical intelligence affecting mobility, enemy defenses, exits, vegetation, gradients, obstacles, surface materials, and urban proximity to support the mission. The analysis provides commanders and planners with critical GEOINT that affect the battlespace in width, depth, height, and time dimensions. The P&A cell will produce Tab B (Beach Studies) to Appendix 11 (Intelligence Estimate) to Annex B (Intelligence) to an OPLAN. See appendix I of this publication for an example format of a beach studies tab.

(5) Helicopter Landing Zone and Drop Zone Studies

HLZ and DZ studies provide the commander and staff with intensified information and analysis covering potential landing for air operations. This includes analysis for potential obstacles, enemy defenses, and the identification of exits to support movement of forces in the objective area. The P&A cell will produce Tab E (HLZ and DZ Studies) to Appendix 11 (Intelligence Estimate) to Annex B (Intelligence) to an OPLAN. See appendix J of this publication for an example of a HLZ and DZ study format.

(6) Port and Harbor Studies

Ports and harbors are related, but distinct, landscape features. Harbors are the sheltered sea areas in which ports are constructed. Harbors may be natural or manmade. Within harbors, ports are built to handle the loading and unloading of goods. Information on ports and harbors is essential for estimating their capacity, capability, vulnerability, and other items to support and sustain MAGTF operations. Large-scale modern warfare usually requires control of harbors and ports for the post-amphibious assault and follow-on phases of a campaign. Ports are easily damaged by aerial

Downloaded from http://www.everyspec.com

bombing, artillery, mortars, missiles, sappers, and other forms of ground attack. Port and harbor studies are prepared by the P&A cell and may be included as a tab to the intelligence estimate or disseminated in other ways.

(7) Airfield Studies

Seizure, construction, operation, and control of airfields is critical to most MAGTF operations. In general, airfields are situated near cities, large facilities, and/or along strategic air routes. Normally, they are located on elevated terrain, somewhat removed from the natural and cultural impediments to flight. Airfields, like ports, can be disrupted easily, to the point of nonoperation. Any surface degradation or parked disabled aircraft can impede air operations.

Military and civilian airfields are closely linked to a nation's transportation system. Airfields are of vital importance during every phase of a military operation. The size and features of an airfield determine its military and other capabilities. Airfield studies focus on the type, physical dimension, construction material, condition, and the nature of an airfield's support facilities. They are produced by the P&A cell and may be issued either as a tab to the intelligence estimate or as separate intelligence products.

4008. Operations Support Requirements

To provide the tailored view of the battlespace and the GI and GEOINT necessary to support the various missions within MAGTF operations, the topo plt must satisfy the following requirements.

a. Query Requirements

The topo plt deploys with prepositioned data bases consisting of FD. As a mission develops, the platoon uses the USIGS to query the national production network for new or updated GEOINT within the area of interest. To conduct a query, the topo plt must access the national and theater military, civil, and academic data bases. This capability usually will require connectivity with the GCCS, INTELINK, JWICS, SIPRNET, NIPRNET, and GBS.

b. Retrieval Requirements

Once the topo plt has identified available data bases to support GEOINT operational requirements, it must be able to pull robust data bases through the CIS networks to update the FD. The platoon then stores the data bases in the TPC for additional processing and production, or for direct access by subordinate commands.

These data bases should be developed during peacetime to support contingency plans and then prepositioned for timely operational support. For example, a MEU(SOC) should deploy with prepositioned GI and GEOINT covering its anticipated AO. The GIT would then be able to pull updated GEOINT to value-add to the existing prepositioned data base information to support mission specific needs. During tactical operations, command echelon data bases below the CE should be preloaded with GI and GEOINT data bases to preclude the need to pull large data base files from the TGIL.

c. Integration Requirements

The topo plt will begin to integrate all data base information it has collected during the query and retrieval processes with the prepositioned FD to populate additional features and attributes. This process will include integrating the oceanographic and land form data bases from NIMA and other sources into a single, seamless data set to support MAGTF requirements.

d. Deconfliction Requirements

In most cases, the integration and deconfliction processes are completed concurrently. When different data bases represent the same feature (e.g., a building) in two different locations, topo platoon must use another source to determine the accurate location or if there is more than one building in the area. This ensures that duplication of prominent features, such as the shoreline from an oceanographic data base (lowest water level)

Downloaded from http://www.everyspec.com

and the shoreline from a land form data base (mean sea level), are properly annotated as the same features with differences in location attributes.

e. Intensification Requirements

Intensification occurs at three different levels to support combat operations: tactical, theater, and national. The topo plt is focused primarily on the intensification of information collected by tactical forces. This information can include the following reports from organic and supporting intelligence and reconnaissance collectors as well as other information sources:

- Engineer and ground reconnaissance reports.
- Bridge reports.
- Surf reports.
- Lines of communications reports.
- HUMINT, SIGINT, and IMINT reports.
- Imagery.
- Civil affairs teams' report.
- BDA reports.

Tactical intensification can include information and intelligence provided by combat forces to update existing data (e.g., bridges or buildings being destroyed, new roads being built, or rice paddies being flooded). These changes are forwarded to the topo plt via the MAGTF network. The platoon validates and modifies the changes and updates the TGIL.

f. Analysis Requirements

The topo plt conducts an analysis to evaluate the environmental impacts to MAGTF missions and enemy capabilities. This analysis is centered around the military aspects of the terrain or KOCOA. The AO is evaluated with respects to KOCOA and then analyzed against each COA within an objective or target area. The analysis identifies potential environmental impacts to friendly forces. In addition, the analysis identifies specific environmental factors that could hinder enemy forces within the objective area and could provide an advantage to the MAGTF. When conducting a mission-specific analysis, topo plt and the P&A cell must consider—

- KOCOA.
- Commander's intent and guidance.
- IRs.
- Scheme of maneuver and the types of units conducting the operation.
- Weapon platforms associated with the units.
- Types of systems available in the units to exploit the information.

g. Production Requirements

The topo plt is the only organic GI and GEOINT production asset within the MAGTF. Using high-end geographic information systems, the platoon can exploit all-source GI, value-add tactical information, and analyze this data for mission-specific criteria. The platoon produces tailored views and products of the battlespace for specific types of units (e.g., logistic, maneuver, close air support, amphibious). It can disseminate this analysis is several media formats based on the user's requirements. Production requirements are prioritized by the ISC, with assistance from the CMDO and the P&A cells OIC, based on the ACIS G-2's direction and priorities. Prioritization is focused on the commander's intent and IRs within the AO.

h. Storage Requirements

(1) TGIL

The topo plt establishes, updates, validates, and maintains the TGIL for the MAGTF AOI. The TGIL will include the raw data coverages for the entire AOI, to include the intensified information within the AO and objective areas. Topo platoon may post tailored views for each functional area of the MAGTF on the TGIL. The TGIL provides the end user with a robust data store for easy access to query for additional information, request updates, or identify new production requirement

(2) Information Management

Tactical management of GEOINT must allow all users to define their view of the battlespace. MAGTF and subordinate commanders must be

Downloaded from http://www.everyspec.com

able to provide updated information, knowledge, and understanding to higher headquarters, to subordinates, and to adjacent units. Prepositioning relevant GEOINT that commanders require is critical to planning and successfully accomplishing a mission. This prepositioning will comprise the initial FD and all MSDS available when deployment occurs. As the operation progresses, the baseline data base will be refreshed and supplemented using either an automatic push or an intentional pull within the tactical infosphere.

i. Dissemination Requirements

The topo plt can employ any of three GI and GEOINT dissemination methods.

(1) MAGTF Tactical Data Network

The TGIL is a smart push and pull, client and server capability that allows all MAGTF echelons to access directly specific views tailored to their operational and functional requirements. It allows the topo plt to value-add information and push it to subordinate command echelons. The TGIL is incorporated into the MAGTF TDN to support all MAGTF systems.

(2) Electronic Media

The topo plt can generate electronic views/products from the TGIL on compact disc-read only memory, floppy disks, and 8 mm tape for dissemination to subordinate units. This provides additional security and backup systems in the event of TDN failure.

(3) Hard-Copy Media

The topo plt can produce limited (50 copies or less) hard-copy GEOINT products for dissemination to units requiring them. Hard-copy output can also be supported at all command echelons by using the intelligence analysis system (IAS) or tactical combat operations (TCO) printers for small quantity output of views generated on the TGIL. This will allow distribution to occur at the lowest level possible without interruption to production requirements.

Downloaded from http://www.everyspec.com

Chapter 5

Communications and Information Systems

Recent shifts in DOD policies regarding GI&S operations have changed the way MAGTFs will access and use GI and GEOINT. NIMA is transitioning their production processes to populate digital geospatial data libraries and has initiated a multiyear phaseout of traditional hard-copy mapping products. NIMA's intent is for tactical commanders and other users to digitally access these data libraries, retrieve basic data, value-add to it locally, and tailor the view of the battlespace to fit their particular MSDS and other intelligence requirements (see chapter 1).

This change presents new challenges to the MAGTF, particularly in the way the topo plts are supported by MAGTF's CIS networks. The dissemination of geospatial data files (ranging in size from hundreds of megabytes to gigabytes) through MAGTF communications systems and TDN requires careful planning to effectively support MAGTF GI and GEOINT CIS requirements while simultaneously maintaining CIS support to all other MAGTF operations and warfighting functions.

GI&S planners must coordinate carefully with the CIS staff under the G-6/S-6. This coordination is necessary to ensure connectivity between the MAGTF and supporting JTF, theater, national, and Service GI and GEOINT producers. In addition, data management functions must be coordinated early in the planning phases to preclude mismanagement of the control and dissemination of GI and GEOINT. The CMD section, under the ISC, is responsible for coordinating with the G-6/S-6 to ensure that the MAGTF's subordinate units are capable of using the same geospatial data base. This data base helps form the geospatial framework of the COP and CTP within the joint operations area battlespace. (See MCWP 6-22, *Communications and Information Systems*, for additional doctrinal guidance on MAGTF CIS operations.)

5001. Communications and Information System Requirements

a. Capability to Command and Control Subordinate Topographic Units

The intel bn commander, P&A cell OIC, SARC OIC, and topo plt commander must be able to command and control subordinate units and integrate topographic units' operations with broader intel bn, MAGTF, and external intelligence and operations command and control. In most cases, topographic elements will be collocated with supported units' intelligence sections, allowing it to use the wide range of CIS capabilities servicing the supported headquarters.

In semistatic situations, the telephone or secure electronic mail via local area networks (LANs) and wide area networks (WANs) may be used as the primary connectivity method. In highly fluid or mobile scenarios, methods of connectivity used may be cellular telephones, satellite communications, and very high frequency (VHF) and high frequency (HF) radios. The CIS architecture must provide connectivity among—

- MAGTF CE topo plt and GISTs and GITs supporting subordinate units.
- MAGTF GEOINT elements, JTF, and other external all-source intelligence and GEOINT production centers.

Downloaded from http://www.everyspec.com

- MAGTF GEOINT elements and supported intel bn and MAGTF operations, intelligence, and other C2 centers.

b. Ability to Receive Collected GI Data and Information

MAGTF topographic elements require access to the high capacity JWICS, SIPRNET, and NIPRNET. Generally, topographic elements supporting the MAGTF CE will require access to all three networks. Topographic elements supporting MAGTF subordinate units generally require access only to SIPRNET and NIPRNET. This connectivity allows MAGTF topographic Marines to access a wide range of GEOINT data bases, coordinate planning, and to conduct analyst-to-analyst exchanges and GEOINT dissemination.

The CIS architecture must support topographic elements' timely receipt and exploitation of information collected by a wide range of intelligence and combat units (e.g., IMINT, ground and air reconnaissance, engineer). This architecture must be capable of transmitting collection reports, files, and GEOINT product reports digitally via fiber, wire, radio, and intelligence broadcasts. This information must be transmitted in formats that are readily usable by the topo plt and by all-source analysts for the production of intelligence.

c. Ability to Provide GEOINT Products

Effective GEOINT operations require the timely dissemination of foundation data and tailored, accurate GEOINT products to commanders and functional planners at all command echelons. MAGTF command echelons' intelligence and GEOINT personnel must be capable of employing all available communications. Such CIS requirements must support push and pull capabilities.

5002. Support to C2 Nodes

The topo plt is the only organic MAGTF asset with the mission, personnel, equipment, training, and capabilities to support GI and GEOINT users. Each CE staff division and MAGTF major subordinate element (MSE) has unique functional requirements for tailored GEOINT views and products of the battlespace. These views are critical to the development of a COP and CTP supporting the commander's requirement for situational awareness and to most other planning and decisionmaking needs. These views will be accessed through the MAGTF CE's TOPOSET TGIL. MAGTF subordinate units' ability to access, query, retrieve, and use GEOINT depends on the TGIL's integration into the MAGTF communications and TDN architectures.

a. MEF Command Element Intelligence C2 Nodes—Combat Intelligence Center and Intelligence Operations Center

The CIC and its subordinate elements is the principal MAGTF intelligence C2 node that provides the facilities and infrastructure for the centralized direction for the MEF's comprehensive intelligence, CI and reconnaissance operations (see figure 5-1). Since the CIC must effectively support the entire MAGTF, it must remain responsive to the requirements of all elements of the MAGTF.

In supporting this objective, the CIC supports both G-2 section and intelligence battalion operations. While integrated, the organizational approach differs some for each of these.

(1) G-2 Section

The key G-2 nodes are organized to effectively align and support the MEF CE's staff cross-functional cellular staff organization and concept of operations. The G-2 plans branch is aligned to provide intelligence support the MEF CE's future plans cell efforts. The G-2 operations branch, however, is aligned to provide intelligence support to the MEF CE's COC, FOC, force fires center and to direct and manage the G-2's Red Cell and the MEF's external intelligence liaison teams (see figure 5-2 on page 5-4).

Downloaded from http://www.everyspec.com

Combat Intelligence Center (CIC)—overarching intelligence operations center established within the MEF main command post. Encompasses the primary functions of the MEF intelligence section and Intelligence Battalion. It includes the sub-elements listed below.

G-2 Plans—main element of the G-2 section for coordinating and providing intelligence support to the MEF CE future plans team; and leadership and direction of the G-2 section's imagery and mapping, SIGINT, and weather sections.

G-2 Operations—main element of the G-2 section for coordinating and providing intelligence support to the MEF CE CG, battle staff and current operations center elements; target intelligence support to the force fires and future operations; G-2 section intelligence requirements management activities; Red Cell support; and MEF intelligence liaison with external commands and organizations.

Intelligence Operations Center—principal MEF intelligence operations and C2 center that is established by intelligence battalion. Performs intelligence requirements management, staff cognizance of ongoing organic and supporting collection operations, intelligence analysis and production, and intelligence dissemination.

- **Support Cell**—primary element for conducting MEF-wide intelligence requirements management; weather support; collections and dissemination planning and direction; and intelligence staff cognizance of MEF organic and supporting intelligence and reconnaissance operations.
- **Production and Analysis Cell**—primary analysis and production element of the MEF. Processes and produces all-source intelligence products in response to requirements of the MEF. Additionally, principal IMINT and GEOINT production element of the MEF.
- **Surveillance and Reconnaissance Cell**—primary element for the supervision of MEF collection operations. Directs, coordinates, and monitors intelligence collection operations conducted by organic, attached, and direct support collection assets.

CI/HUMINT Company Command Post—primary element for conducting CI/HUMINT planning and direction, command and control, and coordination of MEF CI/HUMINT operations with external CI/HUMINT organizations.

Operations Control and Analysis Element (OCAC)—main node for the C2 of radio battalion SIGINT operations and the overall coordination of MEF SIGINT operations. Processes, analyzes, produces, and disseminates SIGINT-derived information and directs the ground-based electronic warfare activities of the radio battalion.

Reconnaissance Operations Center (ROC)—Main mode for the C2 of force reconnaissance company's operations and the overall coordination of MEF ground reconnaissance operations. Processes, analyzes, produces, and disseminates ground reconnaissance-derived information in support of MEF intelligence requirements.

Figure 5-1. MEF CE's Combat Intelligence Center and Intelligence Battalion and Intelligence Operations Center Key Elements.

Downloaded from http://www.everyspec.com

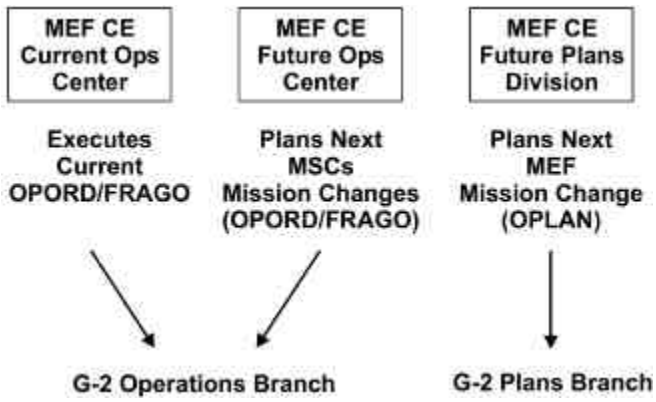

Figure 5-2. MEF CE Cross-Functional Cellular Organization and Intelligence Support.

(2) Intelligence Operations Center

The IOC is the other principal MEF CE intelligence node. It provides the facilities, CIS and other support to allow the ISC and intel bn to perform the following tasks:

- Provide centralized direction for MEF intelligence operations under the staff cognizance of the AC/S G-2. The IOC is the core for this task, with key assistance from the G-2 plans and G-2 operations elements.
- Consolidate, validate, and prioritize IRs of the entire force consistent with the commander's priorities. The key CIC element providing for this is the CMD section within the IOC's support cell. Intelligence specialists from all disciplines, to include GEOINT, generally are organic to this section.
- Plan, develop, and direct the MEF collection, production, and dissemination plans and operations. The key CIC elements providing for this are the CMD section within the IOC's support cell and the P&A cell.
- Submit consolidated requests for external intelligence support through the Marine component headquarters to appropriate agencies. The key CIC element providing for this is the CMD section within the IOC's support cell, with assistance from the P&A cell.
- Allow the ISC to exercise, per AC/S G-2 cognizance, principal staff cognizance of MEF organic and supporting intelligence, CI and reconnaissance operations, to include SIGINT, IMINT, HUMINT, MASINT, ground reconnaissance, and aerial reconnaissance operations.
- Coordinate and manage the employment of MEF organic collection assets through the IOC's SARC. Within the SARC will be representatives from most organic and supporting intelligence and reconnaissance units to provide C2 and reporting of ongoing intelligence operations.
- Maintain a consolidated, all-source intelligence production center in the MEF in IOC's P&A cell. The other node with significant intelligence production involvement is the radio battalion's OCAC. Similar to the CMD section, intelligence specialists from all intelligence disciplines generally are organic to the P&A cell.
- Link the MEF CE to national, theater, joint, other-Service, and multinational intelligence assets and operations. All intelligence intel bn and G-2 section nodes have common and unique capabilities to perform critical tasks within the function. In addition to MEF CE common communications pathways provided by the communications battalion, the IOC generally will also have unique intelligence communications capability, such as Trojan Spirit II.

(3) CIS Support

CIS support to CIC and IOC operations may vary from operation to operation based upon METT-T. Generally all nodes will have or will have access to IAS and JDISS (each with COLISEUM and other specialized applications) and connectivity with the full range of communications (JWICS, SIPRNET, NIPRNET, DSN, DMS, voice, video-teleconferencing, etc.) via either MEF CE common communications or unique intel bn CIS capabilities. Examples of unique intelligence CIS capabilities are those integral to the VMU squadron remote receive station (RRS), the radio bn technical control and analysis center (TCAC) and the AN/MSC-63A special security communications central, the GSP's tactical remote sensor system, the IIP's tactical exploitation group (TEG), the VMAQ squadrons tactical electronic reconnaissance processing and evaluation system (TERPES), the CI/HUMINT automated tool set

Downloaded from http://www.everyspec.com

(CHATS), manpack secondary imagery dissemination system (Manpack SIDS), Trojan Spirit II (TS-II), and the Joint STARS common ground station. See figure 5-3 for a notional depiction of a MEF overarching intelligence CIS architecture.

The MEF G-2 section and intelligence battalions overall command and control relationships and resulting all-source intelligence support flow throughout the MEF are indicated in figure 5-4 on page 5-6.

b. GEOINT CIS Support

(1) MEF

Within the CIC, the primary interfaces for GI and GEOINT access and retrieval are the IAS, the TOPOSET, and the IIP's TEG. When connected to MAGTF LANs, WANs, and the comprehensive MAGTF TDN, these systems support an integrated production concept (IPC). Supported by GEIONT specialists, IMINT analysts, and

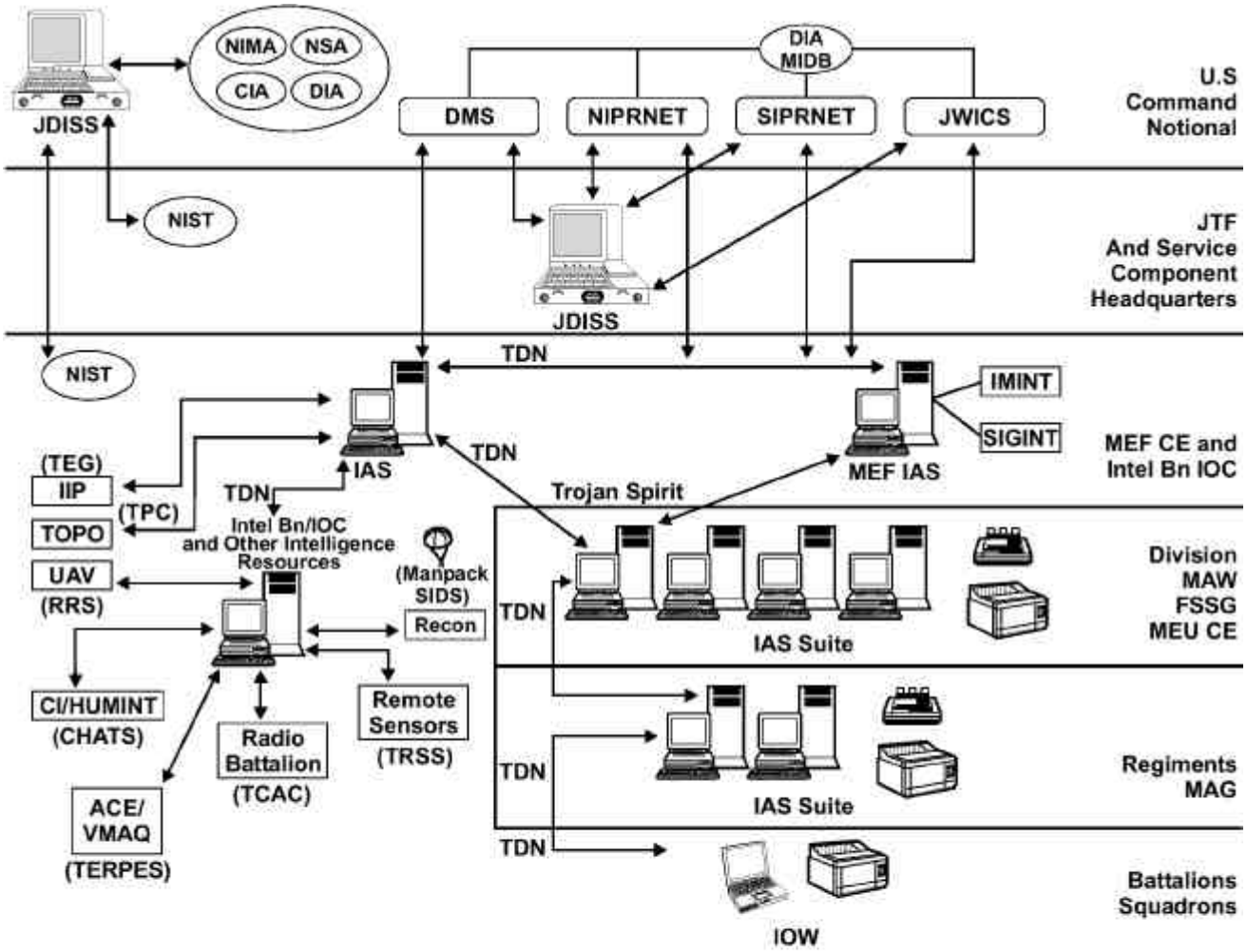

Legend:

NIMA=National Imagery and Mapping Agency
NSA=National Security Agency
CIA=Central Intelligence Agency
DIA=Defense Intelligence Agency
JDISS=Joint Deployable Intelligence Support System
MIDB=Modernized Integrated Data Base
DMS=Defense Message System
IOC=Intelligence Operations Center
NIPRNET=Nonsecure Internet Protocol Router Network
SIPRNET=Secret Internet Protocol Router Network
JWICS=Joint Worldwide Intelligence Communications System
NIST=National Intelligence Support Team
TDN=Tactical Data Network
TOPO=Topographic Platoon
IAS=Intelligence Analysis System
IOW=Intelligence Operations Workstations

Figure 5-3. Notional MEF Intelligence Communications and Information Systems Architecture.

Downloaded from http://www.everyspec.com

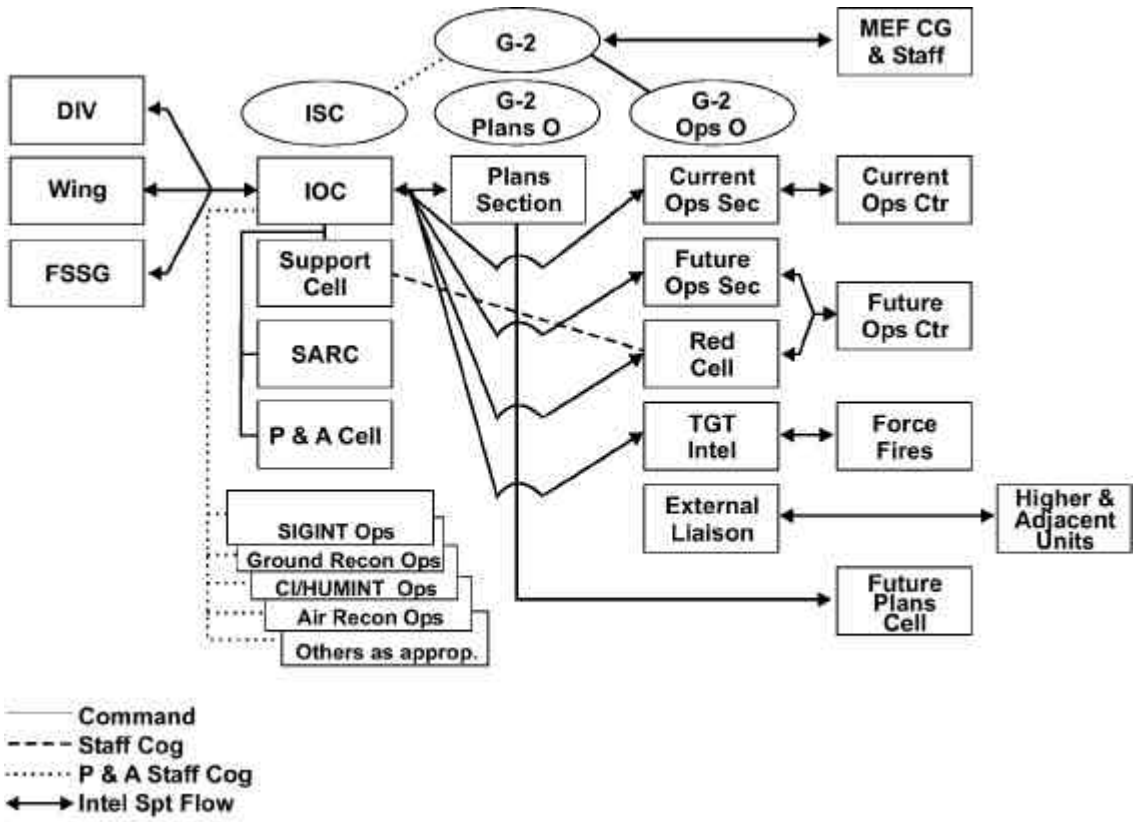

Figure 5-4. MEF G-2 and Intelligence Battalion C2 Relationships and MEF Intelligence Support Flow.

all-source intelligence analysts in the P&A cells, the IPC provides a collaborative production environment for IMINT, GEOINT, and all-source intelligence products. This IPC is a basic principle of NIMA's emerging production processes to support the combatant commands, JTFs, and the Services.

Connectivity between the TGIL and the TEG imagery product library (IPL) mirrors national GI and IMINT operations. This connectivity leverages the technologies and standards developed for collaborative planning, production, and dissemination. The ability of intelligence analysts to provide all-source intelligence products to commanders, their staffs, and subordinate units depends on the fundamental, common picture of the environment. GEOINT specialists and IMINT and all-source intelligence analysts' intelligence production collaboration is a key factor in developing and sustaining the COP/CTP and satisfying MAGTF IRs.

Efficient and effective GI and GEOINT support to the MAGTF staff depends on the connectivity of their C2 systems and supporting CIS to the TGIL. (See appendix L for a list of current and emerging MAGTF systems requiring GI and GEOINT support.) Linking each of these systems through the MAGTF TDN will support GI and GEOINT distribution. In addition, it will provide a collaborative environment to support hyperlinking critical information and intelligence to and from the topo plt geospatial data base. Common usage of this geospatial data base across all MAGTF systems will support the development of a COP and CTP and will provide an integrated structure for battlefield visualization.

Figure 5-5 notionally depicts the integration of key topo plt elements into MAGTF CE

Downloaded from http://www.everyspec.com

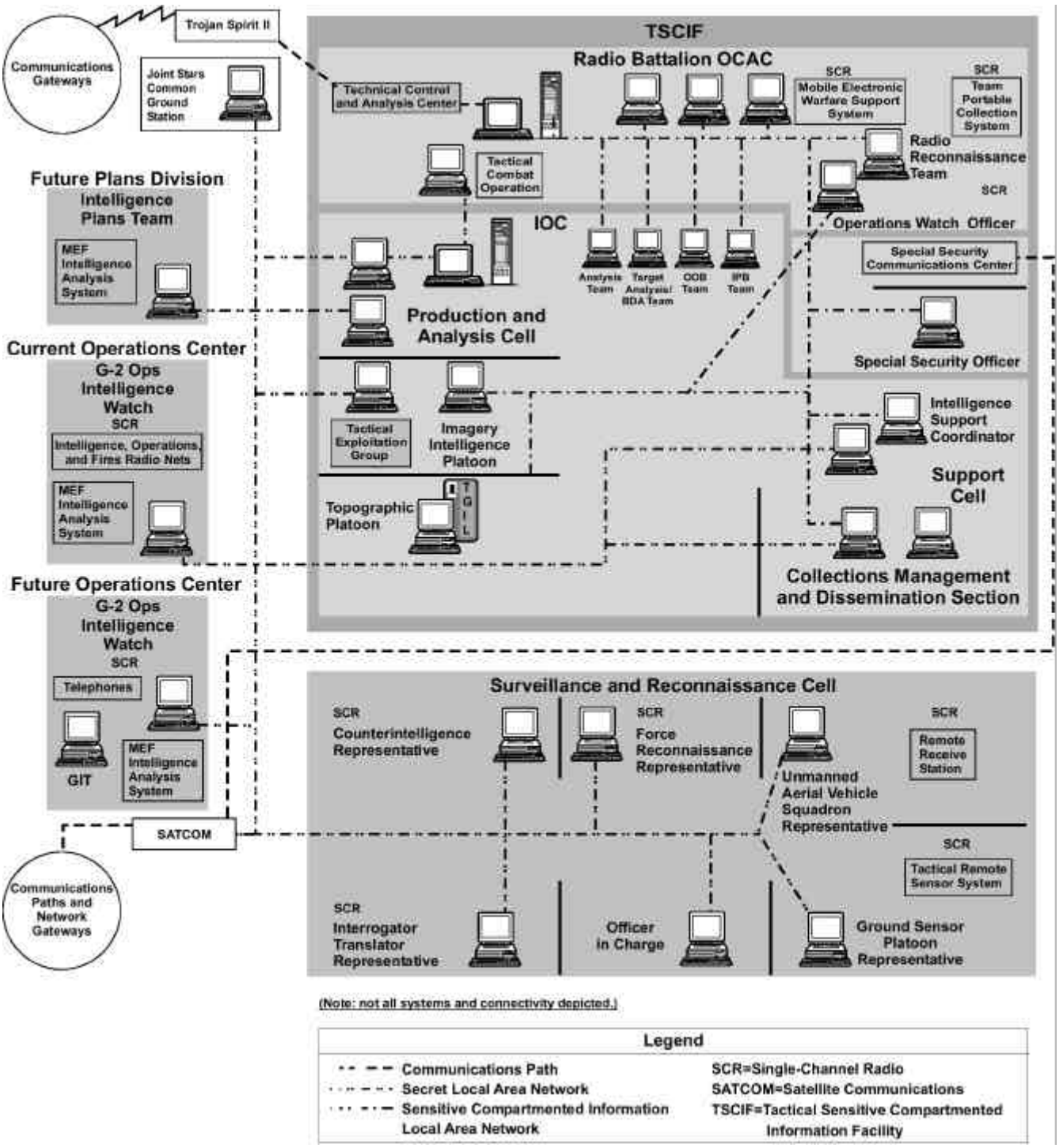

Figure 5-5. Notional MEF CIC CIS Architecture and Topographic Elements.

intelligence operations and key CIS connectivity with subordinate units.

(2) Naval Forces

During amphibious operations, amphibious task force (ATF) and the MAGTF CE's intelligence sections generally will integrate their operations. The principal intelligence C2 node is the Amphibious Task Force Intelligence Center (ATFIC) located aboard the ATF flagship. The ATFIC is composed of designated shipboard spaces with

Downloaded from http://www.everyspec.com

installed CIS systems that support the intelligence operations of both the ATF and LF while reducing duplicative functions and producing more comprehensive and timely intelligence for the entire naval task force (NTF). Standard CIS connectivity is available—JWICS, SIPRNET, NIPRNET, DMS, DSN. Access is provided via the flagships GENSER communication center and the special intelligence communications center within the ATFIC's ship's signals exploitation space (SSES). Similar support may be available to other LF elements embarked on other amphibious ships.

GI and GEOINT support is provided to the naval amphibious task force intelligence center and other C2 centers via the JMCIS network. Embarked GEOINT specialists and their equipment must be integrated into the ship's CIS network to receive and disseminate GI and GEOINT. The integration of GEOINT assets must be coordinated with the ship's communication officer and the amphibious task force's CIS officer. This coordination is necessary for access to the national production network and distributive production support. Access is necessary for pulling GI and GEOINT from afloat and NTF external intelligence and GEOINT support facilities and for pushing tailored mission views forward to support land-based MAGTF operations in a virtual staffing configuration. This communication configuration will also support split-based ATF/LF operations with focused support from reach-back facilities when shipboard topographic assets are limited or not available.

(3) National

(a) National Intelligence Support Team

All-source national intelligence level GEOINT and other intelligence assets may deploy in support of JTF (and even directly in support of MAGTF) operations as well as providing critical support via reach-back and collaborative capabilities. The national intelligence support team (NIST) is the most typical method used. The NIST is a task-organized unit generally consisting of DIA, National Security Agency, Central Intelligence Agency, and, as appropriate, NIMA personnel and equipment. Its mission is to provide a tailored, national level all-source intelligence team to deployed commanders (generally at the JTF headquarters level, but support could be provided to other commands) during crisis or contingency operations. Depending upon the supported unit's requirements, a NIST can be task-organized to provide coordination with national intelligence agencies, analytical expertise, I&W, special assessments, targeting support, streamlined and rapid access to national intelligence data bases and other products, and assistance facilitating RFI management. (See figure 5-6.)

DIA, through the joint staff J-2, controls the NIST for deployment and administrative purposes. During operations a NIST will be in direct support of the JFC, who exercises C2 of it via the JTF J-2. Once deployed, any of the intelligence agencies can provide NIST leadership. The basic C2 relationships between the NIST and the JTF (or other supported commands) command relationship is direct support. The NIST will be under the staff cognizance of the JTF J-2, performing intelligence support functions as so designated. The basic NIST concept of operations is to take the J-2's request for intelligence and collection and production requirements, discuss and deconflict these internally within the NIST to determine which element(s) should take these for action. Each NIST element leader, and as coordinated by the NIST team chief, will conduct liaison with their parent national intelligence organization. All intelligence generated by the NIST is available to the J-2 organization, the JFC, and other elements of the JTF with the usual restriction based on clearance and programs. (See figure 5-7.)

Downloaded from http://www.everyspec.com

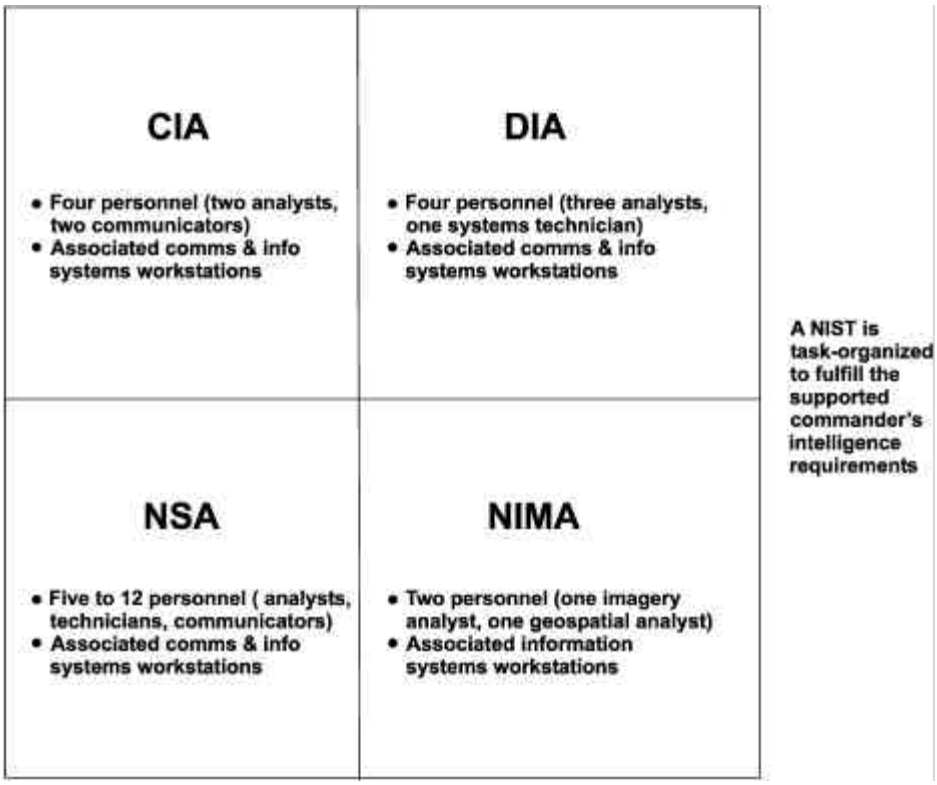

Figure 5-6. Notional Composition of a National Intelligence Support Team.

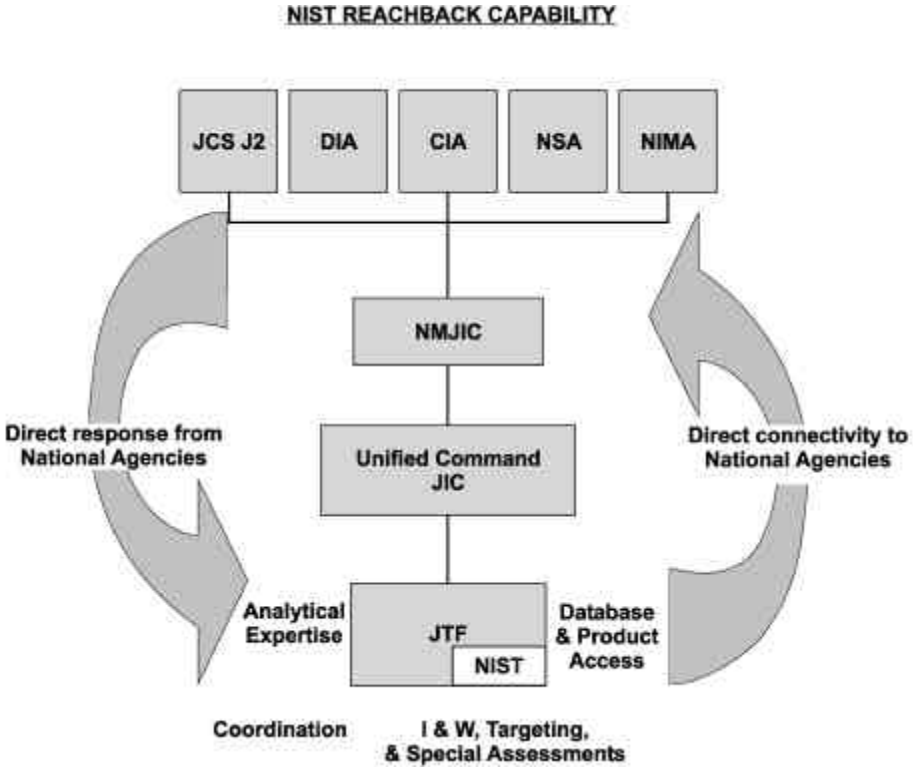

Figure 5-7. National Intelligence Support Team Capabilities.

Downloaded from http://www.everyspec.com

Each NIST deployment is unique based on mission, duration, team composition, and capabilities required. A NIST is not a totally self-contained element. Rather it requires logistic and other element. Rather it requires logistic and other support from the supported command. Its organic capabilities generally encompass only intelligence and unique CIS support.

NIST CIS capabilities are also task-organized. It may range from a single agency element voice connectivity to a fully equipped NIST with JDISS and JWICS video teleconferencing (VTC) capabilities. Current methods of operation continue to rely on both agency and supported command-provided communications paths to support deployed NIST elements. The systems that each elements are capable of deploying are discussed in greater detail in appendix C of JP 2-02, *National Intelligence Support to Joint Operations*.

(b) NIMA

The Director, NIMA, coordinates national CIS support to military and intelligence agencies. NIMA established CIS interoperability standards and data formats for all GI&S operations. Military forces and intelligence agencies use these standards and data formats to support interoperable planning and direction, production and dissemination of GI and GEOINT.

A NIMA customer support response team (CSRT) may be integrated into a NIST or may be deployed in direct support of a military force. The CSRT will typically contain a deployable imagery/geospatial server known as the quick response system (QRS). The QRS is self-contained and generally requires only satellite communications (SATCOM) channel access support from the JTF or other supported unit. The JTF J-2 will coordinate SATCOM channel and COMSEC support through the J-6. Additionally, depending upon the situation, other CIS and related support that a NIST may require from the supported unit includes information systems technical support and an access controlled secure area (generally within the supported unit's tactical sensitive compartmented information facility, or TSCIF).

During operations, the CSRT QRS can provide a MAGTF with a wide range of imagery and GI&S support. In garrison, NIMA's geospatial technical representatives within each MEF's command element will assist with NIMA coordination, special assessments, access to databases, request for intelligence, etc. Finally, NIMA can provide MAGTFs temporary specialized equipment to meet unique operational needs or to satisfy critical deficiencies (such as the Modular Remote Replication Systems that have been provided to deploying MEU(SOC)s to provide a reproduction capability until the Marine Corps acquires an organic capability).

(c) JTF J-2

The JTF J-2 organizational structure will be situation and mission dependent as determined by the JFC. The JISE is the principal intelligence C2 node within the JTF J-2. The JISE is the focus for JTF intelligence operations, providing the JFC and component commanders with situational awareness and other intelligence support regarding adversary air, space, ground and maritime capabilities and activities.

If a NIST is provided in support of the JTF, it generally will integrate its operations within the JISE. Key JISE functions and capabilities include collection management support, order of battle (OOB) analysis, identification of threat centers of gravity and critical vulnerabilities, and intelligence support to targeting and force protection. All GI&S and GEOINT collection, production and dissemination activities will be conducted within the JISE. Once initial basic and current GI&S and GEOINT products and support have been provided to a JTF and its components, updates will be accomplished by the JISE using push/pull dissemination techniques. Intelligence CIS based on the JDISS/JWICS functionality provide the JTF with the ability to query theater and national GEOINT servers and databases for the most current intelligence.

Downloaded from http://www.everyspec.com

(4) Multinational

Combined and multinational operations will generally require the sharing of GI and GEOINT between the MAGTF and allies critical. Combatant commands and subordinate JTFs can request from NIMA the authority to disclose or release GI to coalition and/or allied nations.

A JTF must be interoperable with, and have access to, theater geospatial data bases, as well as allied and/or coalition force data bases and GI&S dissemination systems. For example, GI and GEOINT may be stored on systems such as the Linked Operational Intelligence Centers Europe. This is the primary automated system for exchanging information with North Atlantic Treaty Organization allies.

5003. Joint Communications and Information Systems

A wide range of national, theater, and component CIS is available to joint force and subordinate commanders. The continuing evolution of national and DOD CIS technologies and architectures provides a robust, flexible capability that can be leveraged by the MAGTF (see figure 5-8). While these systems are designed and used primarily for the transfer of traditional intelligence and operational information, they can also be used for the dissemination of basic, current, and estimative GI and GEOINT. However, the existence of these capabilities does not ensure that GI and GEOINT can be disseminated without significant planning and coordination with all command echelons.

a. Planning

When planning CIS requirements, the combatant command, JTF GI&S officer and MEF ISC identify the mission and tasks, formulate/coordinate the concept of operations, consider joint and Service doctrine and capabilities, and then determine the specific mission requirements. Each must work closely with all force intelligence and CIS staffs and subordinate commanders to determine GI&S data bandwidth requirements and data transmission priorities and to develop primary and alternate CIS plans. Supporting communications paths will require connectivity with the Defense Information Systems Network to allow for the transmission of large GI and GEOINT files.

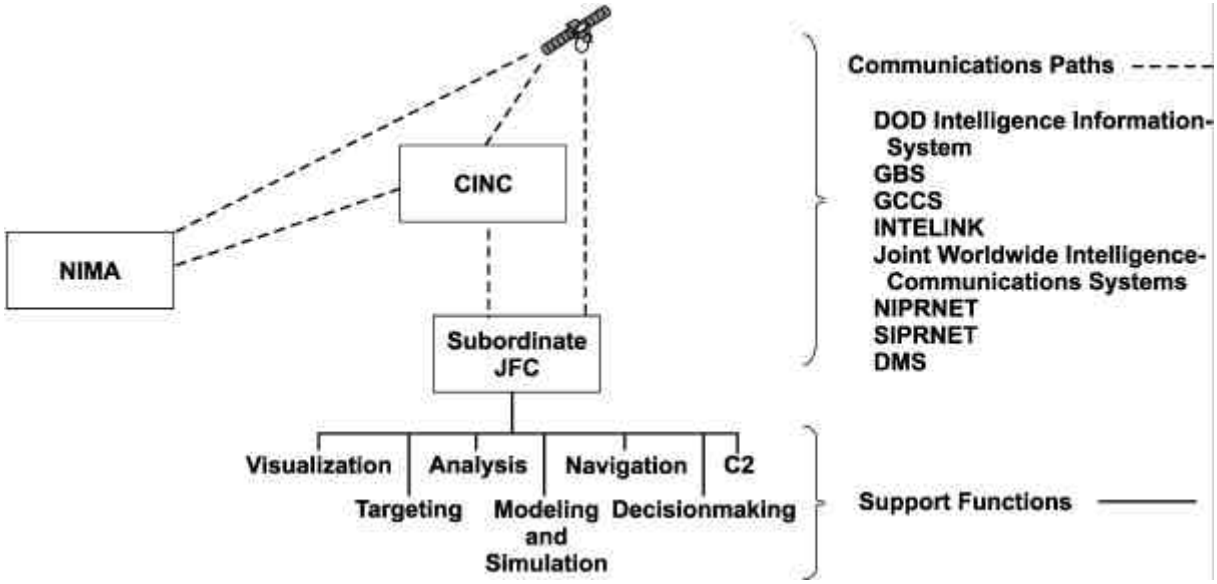

Figure 5-8. Joint CI&S Communications Architecture.

Downloaded from http://www.everyspec.com

b. Mission Objectives

As specific mission objectives of the JFC and each of the subordinate component commanders are developed, intelligence and GEOINT planners develop a list of the subordinate joint force GI&S and GEOINT assets and those assigned from national and Service sourcing. Following the specific time lines for planned operations, these planners will produce an estimate of the data bandwidth and other CIS requirements necessary to fill shortfalls in geospatial data transmissions.

c. CIS Plans

The JTF and MEF J-6/G-6/S-6, assisted by the J-2/G-2/S-2, determines the specific CIS plan to support GI and GEOINT CIS interoperability and dissemination to the MAGTF and to adjacent and higher commanders. The plan generally should include a node-to-node layout of existing and planned CIS transmission routes and modes and the identification of all organizations or units to be included in the CIS architecture.

5004. MAGTF Communications and Information Systems

a. Architecture Planning

The transmission and dissemination of GI and GEOINT is evolving. The DOD GI&S community is involved in ongoing research to develop new, faster, and more effective ways to transfer the large data files associated with GI and GEOINT. The MAGTF I&M and CIS staffs and intel bn must carefully plan and coordinate CIS architecture requirements with the combatant command's and other Services' intelligence and CIS officers, JTF, NIMA, and other CONUS GI&S support activities, as well as, the G-2/G-3/G-6 of subordinate units.

Units should deploy with the most current GI and GEOINT on electronic media such as digital tape, compact discs read only memory (CD-ROMs), or removable disks. Prepositioned geospatial data bases will be the single most important factor for reducing MAGTF TDN bandwidth requirements for the transmission of GI and GEOINT throughout the MAGTF.

The ISC, in coordination with the MEF G-2, G-6, and I&M section, must plan for and establish adequate GI&S CIS support for higher, adjacent, and subordinate commands prior to operational deployment.

b. System Planning

MAGTF communications links include satellite, microwave, radio, land line, LANs, and WANs. After the G-2/S-2 and ISC identify and coordinate intelligence CIS operational requirements with the G-6/S-6, the system planning and engineering process is used to determine the type and number of circuits required, circuit routes, and frequency and bandwidth management communications protocols (e.g., bit rate, parity). The process also determines network protocols and security, management requirements, and other considerations required to make the MAGTF CIS architecture function properly. Concurrently, the ISC/intel bn's systems administrators must design or modify intelligence data bases to meet situation requirements, ensuring understanding of these throughout the MAGTF. Usually, the MAGTF will require CIS connectivity with—

- Subordinate commanders.
- JTF headquarters.
- Other Service components headquarters and key subordinate units.
- NIMA.
- Marine Corps geospatial information libraries.
- Other national assets with geospatial data base holdings.
- Coalition forces' geospatial data bases.

The MAGTF G-6/S-6 may request Defense Information Systems Agency leased or nonorganic theater communications resources.

Downloaded from http://www.everyspec.com

The G-6/S-6 will require the following detailed information from the ISC for formal request documentation:

- Type(s) of telecommunications support.
- Planned location(s).
- Operational activation and duration times.
- CIS equipment to be used at all locations.
- Estimated digital geospatial traffic volumes, precedence, and security levels.
- Recommended establishment and restoration priorities.
- Funding.

c. Planning Considerations

(1) Client and Servers

GEOINT operations are rapidly advancing towards more effective push and pull capabilities. The pull concept allows forces to browse through geospatial data files and acquire—pull—relevant information based upon their specific needs. Data may reside on a distributed network that remains virtually transparent to users, but the data is accessible to many servers on a global basis. The push concept requires that national- or theater-level producers of GI and GEOINT automatically send updated data or data required for navigation safety to all nodes in the force or to a special distribution list of known users.

(2) Data Base Management

The ISC, assisted by the MEF I&M section, must identify the requirements for data base management for the operation. It is anticipated that many users will have the capability to value-add or update the geospatial data base with more current or more detailed information. It is critical that this updated data be disseminated to all pertinent users in the AO, to the theater data base, and to NIMA for inclusion in the DOD GI warehouse. The MIO, in coordination with subordinate command GI&S representatives, the ISC, and the CMDO should identify a single point of contact for all MAGTF in-theater data base management actions. This data base manager reviews and validates any value-added data before it is disseminated. Normally, this point of contact will reside either with the intel bn CMDO, P&A OIC or the topo plt commander.

(3) Alternate Methods of Dissemination

The ISC and CMDO must also identify and evaluate alternate methods of GI and GEOINT product distribution (i.e., CD-ROM, tape, or disk). This dissemination method may be necessary to support the distribution of GI and GEOINT to subordinate units that have insufficient bandwidth connectivity. Distribution of such products via courier must be coordinated with the G-1/S-1 and subordinate units' intelligence offices. Dissemination of bulk GI and GEOINT products such as maps must be coordinated with the G-4/S-4 supply officer to ensure that standard supply distribution support is available. See MCWP 6-22 for additional information on MAGTF CIS planning and operations.

5005. United States Imagery and Geospatial Information System

The USIGS is a NIMA-developed architecture compatible with the joint technical architecture and defense information infrastructure common operating environment. The USIGS provides a client and server capability for the storage and dissemination of imagery, imagery intelligence, GI, and GEOINT. File servers or GI libraries will exist at different command echelons and intelligence agencies to support these mission needs.

The largest library—the National Information Library—stores national imagery, selected tactical imagery, and thematic layers of GI and GEOINT. Combatant command GI libraries will maintain theater-specific data to support their mission.

Connectivity between national, theater, and tactical geospatial libraries is crucial to leverage the collaborative and distributed production capability inherent in the design of the USIGS architecture.

Downloaded from http://www.everyspec.com

5006. Marine Corps Planning Factors Data Base

The Marine Corps PFDB provides a digital process for I&M section and intel bn staff to identify and prioritize MAGTF GI and GEOINT requirements. The PFDB allows developing and submitting digital and hard-copy area requirements in the deliberate and crisis planning process. The PFDB uses selectable user profiles, system data bases, quantity matrix, and mission profiles to establish required features and attributes to support current or future operations. The PFDB uses Marine Corps common hardware and software and is interoperable with theater and national requirements analysis systems. It uses standard LAN and WAN networks to access NIPRNET, SIPRNET, and JWICS architecture via the MAGTF TDN.

Each user and mission profile, with associated requirements list, will be forwarded to GIMO, MCIA, for updating the Marine Corps PFDB. Submissions on geographic area requirements will be forwarded to the appropriate combatant command, via the operational chain of command.

5007. Operations and Supporting Communications and Information Systems

For any given operation, the task organization, command relationships, and supporting CIS pertinent to MAGTF GEOINT operations will be specified within Annexes B, C, and K of the OPORD or in a subsequent fragmentary order. Figure 5-9 captures the broad nature of interrelated GEOINT operations. It notionally depicts five key aspects of MAGTF GEOINT operations:

- The task organization and command and support relationships of MAGTF GEOINT units. Topo plt is collocated with the MEF CE G-2/S-2 and other intel bn elements. It operates in general support of the MAGTF, with GISTs and GITs either attached to or in direct support of MSC/MSE headquarters as required.
- Principal GEOINT systems (e.g., TOPOSET, DTAMS, GIRS) employed within and in support of the MAGTF.
- Communications connectivity, communications pathways, means, and level of security classification.
- Key information systems (e.g., TCO, IAS) that GEOINT supports.
- Principal GEOINT activities and product reports disseminated via communications pathways.

Downloaded from http://www.everyspec.com

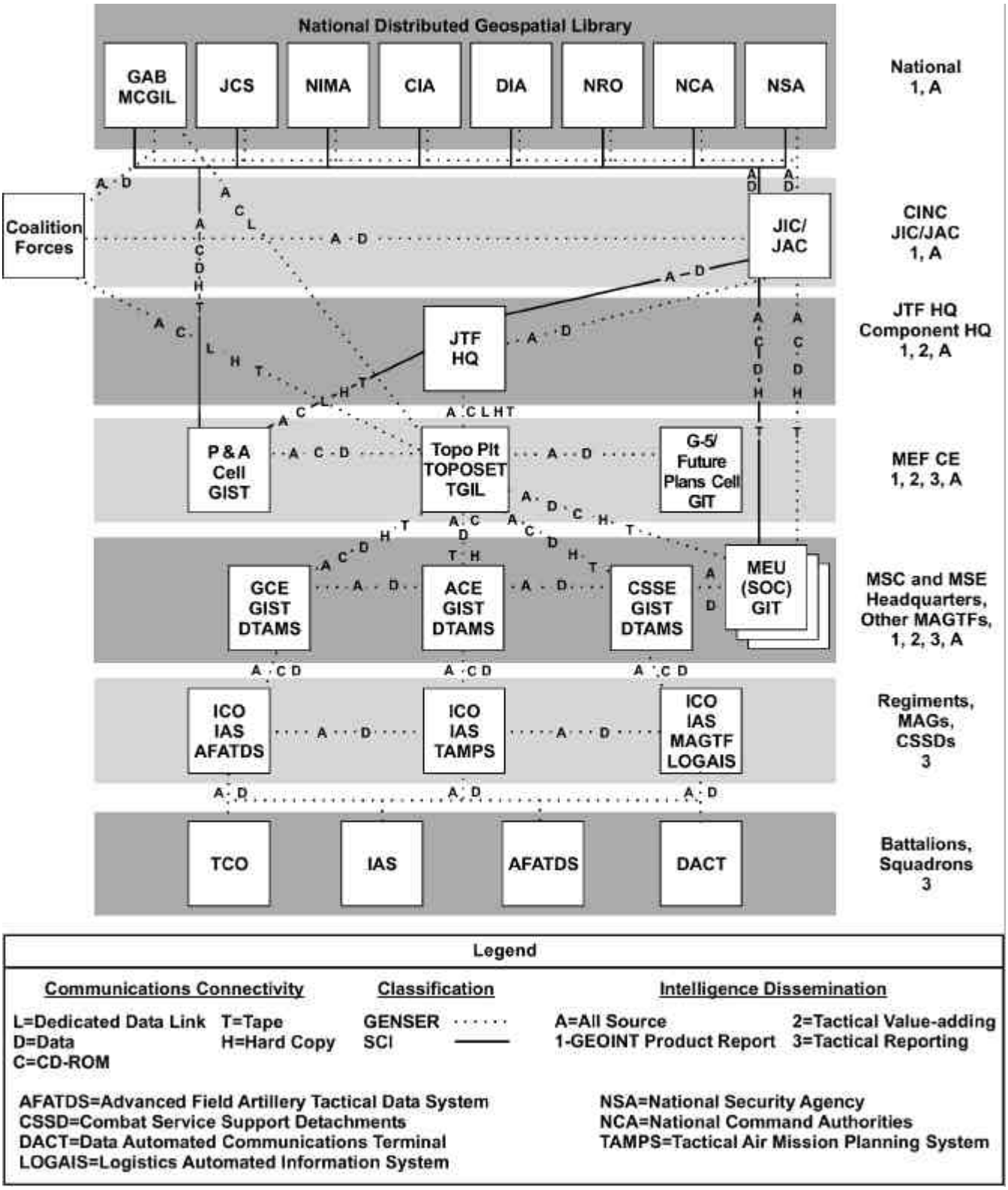

Figure 5-9. MAGTF GEOINT Operations and Supporting CIS.

Downloaded from http://www.everyspec.com

Chapter 6

Security

This chapter provides guidance governing security classification, disclosure, release, and destruction of GI, GEOINT, and related data.

6001. Responsibilities

DOD and NIMA have the primary responsibility for all DOD GI&S activities, to include security. Marine Corps personnel preparing, storing, distributing, and using GI and GEOINT and related data are responsible for ensuring security, classification, and proper release authority complies with DOD Dir 5200.1. The administration of the GI&S classification management program is the responsibility of the unit's security manager and is executed by its classified material control center. All personnel must safeguard appropriate GI and GEOINT and related data at a security classification level commensurate with its sensitivity.

6002. Classification

NIMA GI&S products and related data will be classified only to the degree required to assure adequate protection against unauthorized disclosure.

Security classification and control marking requirements for GI&S products and data are based on the same criteria as for other military intelligence products and data. However, the following unique security requirements should be considered when handling GI&S products and data:

- Foreign government desires, GI&S information, and GI&S bilateral agreements must be honored. Some bilateral agreements specify that the GI&S products prepared or obtained under the agreement shall be classified. NIMA prefers, however, to publish unclassified GI&S products whenever possible to facilitate their storage, handling, and distribution.
- Most NIMA medium- and large-scale GI&S products of foreign areas are normally not releasable outside the U.S. Government without prior approval even though they are unclassified. Likewise, most GI&S products prepared or obtained under bilateral agreements are restricted from release outside the U.S. Government without prior approval from NIMA.
- GI&S products of foreign areas release is often governed by international agreements and by international policy considerations.
- National security policy may direct that certain GI&S products covering areas of strategic or tactical importance that are prepared from sensitive source materials be classified commensurate with the security classification guidance of the primary sources used in their preparation.
- the source that has the lowest classification and/or least restrictive requirements should be used as the cover source when several sources having different classification and release restrictions are equally available for production.

6003. Classification Guidance for New GI and GEOINT

Subject to the direction of the intel bn commander and the P&A cell OIC, the topo plt commander is responsible for assigning the classification level and duration the classification must remain in force for all MAGTF-generated GI and GEOINT products and data bases. The topo plt commander follows the classification guidance established by MEF, JTF or other authority. The topo plt must develop local security procedures for preparing and monitoring production and dissemination plans and for project specifications based on

Downloaded from http://www.everyspec.com

guidance from the MEF AC/S G-2, intel bn commander, and command security manager.

a. GI&S Products and Data Base

The following factors must be considered when maintaining GI&S products and data bases within the MAGTF:

- Maintenance, recompilation, value-adding, intensification or revision of planimetric and relief features previously compiled will require review of security classification based on the new sources used.
- Product and data base must be classified with the same classification as the revision sources if classified features are added or identified.
- Marginal information on the GI&S products or data base will not reveal, by date or other pertinent information, that classified sources were used in its revision.

b. Guide Preparation Considerations

The following factors must be considered when preparing a security classification guide or before providing final security classification guidance for new or revised GI&S products and data bases.

(1) Bilateral Agreements

These agreements provide for classification of GI&S products and data bases. Some bilateral agreements stipulate that GI&S products and data bases resulting from sources subject to the terms of the agreements must be classified. As a result of the agreement, large- and medium-scale GI&S products and data bases covering certain countries must be classified to protect our relations with these nations.

(2) International

Security classification requirements of an international organization such as NATO must be considered in the production of GI&S products and data bases covering an International Pact Organization.

(3) Military Installations

A large-scale GI&S product or data base that identifies military installations must be classified unless public knowledge of the installation and its location is readily available in the news media or other open sources. The minimum level of classification required to protect sensitive installations is confidential. If the source information is classified higher and there is no requirement for sanitizing, then the product must be classified commensurate with the source. The following criteria should be considered in determining the classification of installations:

- An installation is considered sensitive if it serves a critical military function and the knowledge of its existence or location would make it a primary target during wartime.
- For products prepared under cooperative agreements, the security classification indicated by the country involved will be honored and all sensitive installations so indicated will be appropriately protected.

(4) International Boundaries

Security classification and control of GI&S products and data bases portraying international boundaries should conform to these factors:

- If one of the portrayed nations participates with the United States in a bilateral agreement that requires security classification of products and data bases prepared under that agreement, the security classification must be honored unless the nation waives the requirement for similarly protected border sheets.
- If the security classification on any of the previously prepared GI&S products or data bases was based on sensitive sources or sensitive installations, these products should be examined for the current sensitivities and declassified if appropriate.

Downloaded from http://www.everyspec.com

6004. Disclosure and Release of NIMA Classified Products and Data Bases

Only NIMA or the combatant commander can disclose and release classified NIMA products, data bases, and related data to requesters not affiliated with the Marine Corps or DOD. The ISC section must provide detailed justification in all such cases.

a. NIMA Policy

Disclosure may be made only with the approval of NIMA. Classified NIMA products and data bases may be shared with foreign countries and international organizations only when there is a clearly defined advantage to the United States. Disclosure of classified GI&S products and data bases must be in conformance with the guidance set forth in the JTF's security guidance.

b. Disclosure Procedures

Handling a request for disclosure should be done expeditiously to maintain good relations and to ensure good treatment for U.S. disclosure requests. All requests for GI&S products or data bases to support war plans and combat operations should be forwarded thorough appropriate GI&S channels to the theater combatant command's GI&S officer for action. The ISC or unit G-2/S-2 is responsible for this within MAGTF units.

Processing a request for release of NIMA GI&S products and data bases may be approved if it meets the requirements outlined in appropriate NIMA directives. All disclosures and denials must be approved by an authorized NIMA disclosure official. Requests that do not meet the stated requirements must be denied or an exception to national defense policy must be obtained.

c. Release of NIMA Classified Material

The physical release of NIMA classified material to a representative of a foreign country can be authorized only by the Director, NIMA. Physical release must be in concert with current directives as implemented by DOD Dir 5230.11, *Disclosure of Classified Military Information to Foreign Governments*.

6005. Release of NIMA Unclassified Products and Data Bases

It is the policy of NIMA to provide unclassified GI&S products and data bases to U.S. Government agencies, the general public, and domestic commercial firms to the maximum extent possible. These products and data bases are provided without compromising DOD plans, programs, and operations that require protection in the interest of national security. NIMA products and data bases are the property of the DOD and are to be used in the best interest of the U.S. Government.

a. Release Categories

Release of unclassified NIMA GI&S products and data bases is divided into the following three categories.

(1) Fully Releasable

Those products and data bases normally offered for public sale as listed in pertinent NIMA directives and catalogs.

(2) Releasable at the Option of NIMA

NIMA products and data bases including medium- (1:250,000) and large-scale (1:100,000, 1:50,000, and larger) materials covering foreign territories may carry cautionary notes or handling warnings as set forth in DOD Dir 5230.24, *Distribution Statements on Technical Documents*.

(3) Not Releasable

Certain unclassified NIMA products and data bases may not be releasable to requesters outside of the DOD because of existing bilateral agreements that preclude further dissemination or distribution. These products or data bases will normally carry cautionary notes or release warnings reflecting the specific restrictions.

Downloaded from http://www.everyspec.com

b. Release Guidance

GI&S products and data bases are technical information packages prepared to meet DOD requirements. The release of this information depends on national security policy considerations. When possible, NIMA products and data bases are produced, stored, and distributed on an unclassified basis to facilitate their use by military forces. However, their release to private or international users is subject to review by a designated NIMA official. This review ensures that national security policy considerations and/or certain provisions of bilateral and international agreements are not compromised.

In general, NIMA products and data bases at small scales (1:500,000 resolution or smaller) are releasable to the general public. Exceptional circumstances preclude some special or specific products from release. Request for release of GI&S products or data bases must be confirmed (through appropriate GI&S channels) with the theater combatant command or GIMO prior to release.

6006. Disposal of GI&S Products and Data Bases

NIMA GI&S products will, in time, become obsolete, surplus or superseded and therefore require disposal. The appropriate manner of disposal of these products is determined by the security classification level or affixed handling warnings.

a. Disposal of Classified Products and Data Bases

Classified GI&S products and related data must be destroyed in accordance with the regulations governing the destruction of classified materials as stated in the current version of Chief of Naval Operations Instruction (OPNAVINST) 5510.1H, *Department of the Navy Information and Personnel Security Program Regulation*, and appropriate NIMA directives.

b. Disposal of Unclassified Products and Data Bases

The NIMA policy for the disposal of superseded or obsolete products and data bases that are not authorized for public sale may be implemented with the following provisions:

- Recycling process requires excess stock be cut and bound for use as memo pads, calendars, scratch pads, and similar use items.
- Recycling process (cutting and intermixing) of excess stock must be done within a U.S. Government or military facility by personnel assigned to the respective agency or facility.
- Recycling must be accomplished in such a manner so that users cannot easily reconstruct the original product.
- Recycled products may only be made available to personnel assigned to such facilities with specific instructions that will preclude further distribution. The recycled products are not to be made available for public sale.
- Maximum pad size produced from excess limited-distribution stock must not exceed one fourth the size of the original product.
- Disposal of unclassified GI&S products and data bases at scale densities of 1:500,000 equivalent and smaller may be used for pulping, reclamation, destruction or any ecologically compatible manner that precludes resale. The products may be reused as memo pads, forms, calendars, etc., for any requirements of the U.S. or local government.
- Disposal of unclassified GI&S products and data bases at scale densities of 1:250,000 equivalent and larger (such as 1:50,000 or city graphics), must be destroyed by pulping, shredding, burning, destruction, or other ecological compatible manner that precludes the reuse of that product. These products can not be reused as memo pads, forms, calendars, etc.
- MEF GI&S section must be notified if unclassified excess stock cannot be recycled for use within a command or properly destroyed to coordinate the movement of the excess stock to the nearest defense property disposal office for disposition. Disposal will be mutilation by shredding, pulverizing, burning, etc.

Downloaded from http://www.everyspec.com

Chapter 7

Training

The GIMO, MCIA, through the Training and Education Division, MCCDC, is responsible for implementing and maintaining a Marine Corps GI&S and GEOINT training and education program in support of Marine Corps forces. Local training plans should reflect GI and GEOINT training on such topics as datums, coordinate conversions, requisition procedures, and support capabilities.

7001. Organic Topographic Training

The topo plt commander and chief are responsible to the intelligence battalion commander for developing and implementing new training requirements necessary for effective GEOINT operations and for maintenance of all organic equipment. This includes conversion training for operators who will use and maintain first and second echelon maintenance systems while deployed.

a. Requirements

Initial training for all geographic intelligence specialists (MOS 0261) and intelligence officers (MOS 0202) assigned to GI&S billets is conducted at the DMS, NIMA College, Ft. Belvoir, VA. Follow-on training and advanced training are managed by the intelligence occupational field sponsor, HQMC, C4I.

Each topo plt will develop an annual training plan (see appendix M) to support and maintain the skills critical to mission success. Copies of these plans will be maintained by the intelligence battalion S-3 and the MEF I&M section. Alternative training, such as interactive courseware, DMS mobile training teams, and local civilian schools, can be emphasized to enhance skill levels in all functional areas of the platoon.

b. Training Objectives

Training for MAGTF geographic intelligence specialists and intelligence officers assigned to GI&S billets should include—

- Geodetic survey planning and employment.
- Topographic production planning and employment.
- Required MAGTF mission profiles and typical GEOINT products.
- Topographic production orientation and familiarization.
- Topographic and airfield survey.
- Geodetic survey orientation and familiarization.
- Terrain analysis application training.
- Hydrographic analysis training.
- Operator training.
- Maintenance training.
- Geospatial data base management training.
- IPB application training.

c. Orientation and Familiarization Training

All intelligence personnel will receive instruction on the GI and GEOINT capabilities, limitations, and employment as part of their formal MOS school training. In addition, GI and GEOINT orientation and familiarization should be incorporated into unit intelligence training programs at all levels. Information on GI and GEOINT capabilities, limitations, and employment shall be incorporated into instruction on organic intelligence capabilities in formal professional military education (PME) courses. Unit PME programs shall include GI and GEOINT orientation and familiarization in any classes covering intelligence planning and direction, collection, processing, production, mapping, land navigation, and surveying.

Downloaded from http://www.everyspec.com

d. Planning and Employment Training

GI and GEOINT planning and employment training is provided as part of the formal school training for MAGTF intelligence officers (MOS 0202), ground intelligence officers (MOS 0203), air intelligence officers (MOS 0275), MAGTF intelligence chiefs (MOS 0231), and geographic intelligence specialists (MOS 0261). In addition, training for GI and GEOINT planning and employment is taught at the MC&G officers course (MCGOC) and MC&G staff officers course (MCGSOC) at the DMS. Planning and employment is also addressed in the specialized courses on intelligence collection, processing, production, mapping, land navigation, and surveying.

(1) Operator Training

Geographic intelligence specialists attend a 12-month basic topographic (BTOPO) course. Upon completion of this course, graduates receive 6 months of intensive on-the-job training with one of the topo plts. Each topo plt establishes its own training cycle to develop and enhance operator proficiency.

(2) Maintenance Training

First echelon equipment maintenance is included as part of the BTOPO course. Training in basic computer maintenance procedures is provided to technicians at the Communications-Electronics School. Further maintenance training is done within the topo plt.

(3) Data Base Management Training

Initial training for data base management training is included as part of the BTOPO course. Advanced training will be conducted at DMS, Ft. Belvoir, VA.

e. MAGTF Training

GI and GEOINT operations and use should be incorporated into all MAGTF training. The training goal is to integrate the intelligence planning and direction, collection, processing, production, dissemination, and use of GI and GEOINT into all MAGTF activities. This training should enhance the MAGTF's capability to effectively use GI and GEOINT to support situational awareness and mission success. GI and GEOINT operation should be conducted under a variety of C2 support relationships during major training exercises.

(1) Command Post Exercise and Staff Exercise

The production and use of GI and GEOINT should be included in all command post exercises (CPXs) and staff exercises (STAFFEXs). Training exercises emphasize the planning of GI and GEOINT support requirements and production procedures, the dissemination of GI and GEOINT within MAGTF CIS systems, and the use of GEOINT within the MCPP. During a CPX or STAFFEX, the unit intelligence officer should exercise the planning cycle and develop a realistic GEOINT production plan. GI&S specialists should be provided to the exercise control group to validate the planning and production plan and to simulate the dissemination of MSDS from national and theater production facilities.

(2) Field Training Exercise

Field training exercises (FTXs) may be used to practice geodetic and topographic surveys and terrain analysis collection, as well as the integration, intensification, production, and dissemination of tailored MSDS to support command, control, intelligence, fire support, aviation, logistical, and maneuver operations. The topo plt and intelligence personnel at all command echelons must aggressively seek and use other units' GI and GEOINT training. Topographic detachments can be used in exercises down to the regimental and MAG levels. The detachments' support of both the exercise force and the opposing forces will provide maximum training value for all units and personnel.

7002. Training Courses

Basic- and advanced-level GI and GEOINT training programs are available by attending DMS courses or requesting mobile training team support. Alternative education GI&S programs could

Downloaded from http://www.everyspec.com

include correspondence courses, contractor-supported training or an accredited college program.

The following course descriptions are generic. Changes in NIMA strategic directions, changes in Marine Corps and other Services' operational concepts and individual training standards, and new technologies that demand different training approaches may lead to dynamic changes in course curriculums.

a. Basic Level

(1) Introduction to Remotely Sensed Imagery and Geographic Information Systems

This course familiarizes personnel with the following topics to enhance their operational capabilities and combat effectiveness:

- Theory, concepts, and principles of remotely sensed imagery (RSI) and GIS.
- Digital data extraction.
- Digital imagery manipulation.
- Geodetic control accuracy.
- Data source merging and exploitation.
- RIS and GIS link to the GPS.
- NIMA digital data formats and structures.

(2) Mapping, Charting, and Geodesy Officer Course

This instruction trains officers, warrant officers, and foreign military personnel in GI&S technical skills in a comprehensive, 1-week course. Application focuses on skills and decision aids provided to commanders and staff in deliberate planning and crisis situations. Graduates possess skills useful to commanders, staff planners, and operations officers. Technical instruction includes—

- Terrain analysis.
- Cartography.
- Map revision.
- Remote sensing.
- Geodesy and survey.
- Grid systems, datums, and product accuracy.
- NIMA support.
- GPS and precise positioning system (PPS).

(3) Mapping, Charting, and Geodesy Staff Officer Course

This course is a week-long introduction to GI&S staff officer responsibilities with emphasis on interaction with GI&S staff entities. Instruction exposes students to a broad range of GI&S entities from topographic platoons to theater and national agency-level commands. Students also use Government off-the-shelf software and hardware to gain technical and analytical insight of command-level GI&S section responsibilities and capabilities.

(4) Mapping, Charting, and Geodesy for the Warrior

This instruction provides basic knowledge of GI&S that impact the warfighter. The 2-day course covers the following topics:

- GI&S fundamentals (i.e., datums, product accuracy, grids, and projections).
- GPS (i.e., navigation, differential GPS and precise positioning, GPS-related weapon systems).
- Products and services (i.e., exercise and crisis support, catalogs and distribution, standard products).
- Digital (i.e., digital products, GIS, RSI, PPS).

(5) Global Positioning System for the Surveyor

Designed for military personnel and DOD civilians who require expertise in precise positioning, this training develops skills in planning, conducting, and postprocessing GPS data in compliance with NIMA and the Federal Geodetic Control Subcommittee specifications and standards. The curriculum includes the following topics:

- GPS concepts.
- Geodetic and three-dimensional coordinate systems.
- Geodetic measurements and accuracy considerations.
- Field operations and postprocessing.

Downloaded from http://www.everyspec.com

- Specifications and planning.
- GPS equipment use.

(6) Basic Cartography Course

This instruction provides entry-level personnel with the apprentice-level skills and knowledge necessary to perform the following basic cartographic tasks:

- Aerial photo interpretation.
- Planimetric revision.
- Map montaging.
- Map revision.
- Photomosaic construction.
- Color separation methods.

(7) Basic Geodetic Survey Course

This course provides apprentice-level skill and knowledge necessary to establish ground survey control for military GI&S operations. Field surveying and basic computation techniques are taught. It includes instruction on the operation of the precise spirit level, electronic distance measuring devices, and 1-second and 0.2-second theodolite. Familiarization is provided on satellite surveying methods, the automatic integrated survey instrument (AISI), and survey computer applications.

(8) Basic Terrain Analysis Course

This instruction provides apprentice-level training in the techniques of military geographic analysis required to produce military GEOINT. Emphasis is placed on gathering and extracting military significant data on both natural and manmade terrain features. It also introduces application of computer-assisted techniques in digital data manipulation.

(9) Basic Topography

This instruction provides training on vector map (VMAP) level I data base production workflow methods using the ARC/INFO software. The course is divided into two segments: data capture/hardware conversion and ARC/INFO to vector product format conversion. It begins with an overview of the production workflow. Data capture training includes projection generation, registration of raster files, and data collection techniques and procedures. Training also covers schema creation and quality control and validation techniques. Hands-on work closely simulates a GEOINT production environment to allow students to obtain experience with the process flow and production software.

b. Advanced Level

(1) Advanced Cartography Course

This course provides personnel with a working knowledge of cartographic project reporting, advanced-level cartographic tasks, computerized cartographic and photomapping applications, production management methods, and equipment supervision techniques.

(2) Advanced Geodetic Survey Course

This training provides a working knowledge of the following survey project planning, project management, project reporting, and advanced geodetic surveying techniques:

- Satellite and inertial positioning systems.
- AISI, computing, and adjusting geodetic figures, directions, length, and positions.
- Survey computer applications.
- Precision instrumentation related to high order surveys.

(3) Advanced Terrain Analysis Course

This course provides technical skills necessary for supervising the operations of a geographic intelligence team. It includes extensive application of digital data, RIS, and GIS. This instruction provides personnel with the advanced-level technical skills necessary to—

- Perform combat-oriented terrain analysis.
- Assess the effects of weather on the terrain.
- Integrate GEOINT within the overall intelligence cycle.
- Develop graphics that enable the commander to see the battlefield and use the terrain to maximum advantage.

Downloaded from http://www.everyspec.com

Appendix A

Geographic Intelligence Products and Reports

This appendix provides basic information on the different types of GI&S, GEOINT, and key all-source intelligence resources and products prepared within the intelligence community.

Products

Beach Study

Beach studies provide detailed information on beaches and other potential points along the coastline that support amphibious operations. See appendix I for an example format.

Helicopter Landing Zone and Drop Zone Study

These all-source intelligence studies identify potential helicopter landing zones (HLZs) and drop zones (DZs) based on terrain factors. These factors include vegetation, slope, surface materials, and obstacles. The analysis also identifies approach patterns, potential exits, total area, as well as major and minor axes of the HLZ and DZ. Imagery and intelligence personnel provide commanders and planners with additional detailed intelligence analysis of potential HLZs and DZs. See appendix J for an example format.

Hydrographic Study

Hydrographic studies focus on rivers and steams within the area of operations to support transportation and other requirements. These studies identify potential obstacles and their impacts on maneuvering forces. Imagery and intelligence personnel conduct detailed intelligence analysis of the hydrographic features to support logistics and operational forces.

Lines of Communications Study

All-source lines of communications (LOC) intelligence studies provide detailed information on the transportation infrastructure within the area of operations. LOC studies include textual and graphical information on the roads, railroads, bridges, tunnels, airfields, and by-passes. Imagery and intelligence personnel conduct detailed intelligence analysis of the transportation infrastructure to support logistics and operational forces.

Tactical Study of the Terrain

The topographic platoon prepares these detailed studies by using National Imagery and Mapping Agency (NIMA) baseline data sets to analyze the terrain within an area of operations. These studies focus on the military aspects of the terrain, referred to as KOCOA: key terrain, observation and fields of fire, cover and concealment, obstacles, and avenues of approach (and mobility corridors).

Initially, the analysis is completed using foundation data (FD) that supports the intelligence preparation of the battlespace (IPB). Then, the analysis is intensified to provide mission specific data sets (MSDS) and fused with operational all-source intelligence to provide detailed information on mission objective and target areas. See appendix H for an example format of the tactical study of the terrain.

Urban Study

These are high-resolution specialized studies of the urban environment to support MOUT. The analysis is completed initially using FD in support of IPB. It also provides two- and three-dimensional battlespace views to support planning and rehearsal. Intensification of the analysis within defined objective and target areas and fusing with other intelligence provides tailored

Downloaded from http://www.everyspec.com

information in MSDS and other intelligence products.

Modified Combined Obstacle Overlay

The modified combined obstacle overlay (MCOO) is an intelligence product used to depict the battlespace's effects on military operations. The MCOO is the graphic terrain analysis on which significant IPB products and analysis are based. It may be portrayed using either actual maps and overlays or the basic digital data base of the battlespace area evaluation, terrain analysis, and weather analysis phases of the IPB process.

Normally, the MCOO depicts all obstacles to mobility. At a minimum, this graphic representation would entail—

- Cross-country movement.
- Transportation infrastructure.
- Built-up areas.
- Rivers and water obstacles.
- Key terrain.
- Natural and manmade obstacles.
- Avenues of approach.
- Axes of advance.
- Mobility corridors.
- Friendly and enemy objectives.
- Contaminated areas.
- Air avenues of approach.

Data Bases

Controlled Image Base Data Base

Controlled image base (CIB) is an unclassified seamless data set of orthophotos made from rectified gray-scale aerial images. It supports various weapons, command and control, CIS, mission planning, digital moving map, terrain analysis, simulation, and intelligence systems. This data base provides—

- Rapid overview of areas of operations.
- Map substitute for emergencies and crises.
- Metric foundation for anchoring other data in systems or image exploitation.
- Positionally correct images for draping in terrain visualization.
- Image backgrounds for mission planning and rehearsal.

Cross-Country Movement Data Base

Cross-country movement (CCM) data identify severely restricted, restricted, and unrestricted terrain that is not improved specifically for vehicular traffic. It also identifies the types of vehicles that may travel across that terrain. Analysis includes factors such as vehicle and vegetation types as well as terrain slope, surface, and subsurface materials. The CCM analysis does not imply that a particular vehicle, or group of vehicles, cannot be operated in a severely restricted area but identifies that maneuver may require modification to tactics and procedures. Normally, CCM data bases are developed on enemy and friendly forces traveling in main battle tanks, medium-track vehicles, medium-wheeled vehicles, and light-wheeled vehicles. CCM data is not developed to reflect foot mobile forces because normally they are not restricted by any type of terrain environment.

Digital Aeronautical Flight Information File Data Base

This is a flight information data base containing airports, heliports, navigational aids, airspace, as well as high and low en route structures worldwide. The information from this data base is used in automated flight planning systems, flight simulators, geographic information systems (GIS), and flight management computer systems.

Digital Bathymetric Data Base

The digital bathymetric data base (DBDB) was developed by the Naval Oceanographic Office. The data base contains gridded bathymetric data. Depths are given in uncorrected meters for the post spacing of the given data base. Post spacings available include DBDB 5 minute (DBDB5), DBDB 0.5 minute (DBDB.5), and DBDB 0.1 minute (DBDB.1) of latitude and longitude. The data base information is used to develop small- and large-scale bathymetric contour charts, planning graphics, and digital

Downloaded from http://www.everyspec.com

displays. The Navy controls distribution of these products.

Digital Nautical Chart Data Base

Digital nautical chart (DNC) data base is a vector-based digital data base containing selected maritime physical features collected from harbor, approach, coastal, and general charts. The information is formatted for computerized Marine navigation and GIS applications. DNC is used for chart displays, CIS, and GIS.

Digital Point Positioning Data Base

Digital point positioning data base (DPPDB) is a deployable set of geographically controlled imagery with associated support data. The DPPDB can help quickly and accurately identify positional data for any area feature stored in the data base. This includes accurate geodetic latitude, longitude, and elevation.

The DPPDB is a data-only product. The exploitation of the data will be defined by each user's hardware and software capabilities. The primary purpose of the DPPDB is to provide operational and tactical forces with a data base which is used in the field. It enables trained personnel to derive accurate coordinates for any feature within the data base area. This is a classified product, releasable to DOD customers based upon valid requirements.

Digital Terrain Elevation Data Base

Digital terrain elevation data (DTED) base is a uniform matrix of terrain elevation values. It provides a basic quantitative data base for all military systems that require terrain elevation, slope, and/or surface roughness information. To support operations, this data is produced in the following multiple resolutions:

- Level 1 post spacing is 3 arc seconds or approximately 100 meters.
- Level 2 post spacing is 1 arc second or approximately 30 meters.
- Levels 3 through 5 have not been formalized yet but will be approximately 10 to 1 meter resolution.

Firefinder Elevation Data Base

Firefinder elevation data (FFED) base is digitized triaxial coordinates collected on the preferred geodetic datum, usually World Geodetic System 1984 (WGS-84), at 125-meter post spacing in 100 x 100 kilometer areas. Values are collected from DTED and transformed to universal transverse mercator coordinates. The vertical values are assigned within 256 elevation bands defined between minimum and maximum values occurring in the area. The FFED provides high-speed computation of mortar and field artillery firing positions from radar intercepts of projectile trajectories. FFED source tapes are a special-purpose NIMA product that require dubbing onto field cassettes prior to use by the firefinder system.

Foundation Data Base

FD is a seamless, integrated geospatial data base consisting primarily of imagery, elevation data, and map feature information. The primary focus of FD is to support initial planning and to establish the framework for intensification of data within the area of operations necessary to support planning and decisionmaking. Predominantly, FD is at a medium-scale resolution (similar to a 1:250,000 scale chart).

FD forms the base of a geospatial framework from which all additional data is referenced. It is one of the principal components of the DOD readiness strategy designed to meet MAGTF requirements. FD is relatively stable background information that is mission and force independent, specification compliant, and geopositioned to the WGS-84 datum.

Foundation Feature Data Base

Foundation feature data (FFD) is selected feature data, with some attribution, arranged in relational thematic layers. Feature density depends on the specific geographic region, though it will generally approximate that of a traditional topographic line map (TLM). FFD includes transportation and drainage networks, geodetic control points, populated places, boundaries, vegetation,

Downloaded from http://www.everyspec.com

as well as natural and cultural features of high interest or visibility.

Mission Specific Data Sets Data Base

MSDS data base is any user-defined enhancement of FD required to conduct a mission. It supports the DOD responsiveness strategy designed to meet MAGTF requirements. MSDS is developed by enhancing the information contained in the FD set and includes higher resolution controlled imagery, elevation and/or bathymetric depth information, as well as vector features needed to meet a defined mission. MSDS is focused on a specific area, type force, and mission.

Legacy NIMA Digital Products

Compressed ARC Digitized Raster Graphics

Compressed equal arc-second raster chart (ARC) digitized raster graphics (CADRG) is a coordinated common compression of ARC digitized raster graphics (ADRG) for use in any application requiring rapid display of a map image or manipulation of a map image in raster form. CADRG achieves a nominal compression of 55:1 over ADRG. CADRG is intended for use in a variety of systems requiring map backgrounds, coordinate selection, and perspective view generation. This includes, but is not limited to, mission planning systems, theater battle management systems, and intelligence systems.

Interim Terrain Data and Planning Interim Terrain Data

Interim terrain data (ITD) and planning interim terrain data (PITD) are designed to provide digital terrain analysis data for systems being fielded prior to NIMA's full-scale production of digital topographic data (DTOP). It consists of contiguous digital data sets covering specified geographic areas. These data sets are composed of attributed and unsymbolized feature information with enhanced transportation files. ITD and PITD are built in the standard linear format to support Army mobility models.

ITD and PITD are used by the Army's Digital Topographic Support System to provide terrain analysis information that assists operations, intelligence, and logistics planners in the performance of the following automated tasks:

- Terrain visualization.
- Route and site selection.
- Mobility and countermobility planning.
- Communications planning.
- Navigation.
- Fire support planning and execution.

Urban Vector Map

The urban vector map (UVMAP) program is designed to provide vector-based geospatial data with city graphic content. The VMAP program separates data into 10 thematic layers with each layer containing thermatically consistent data. Data is collected at a density of detail that approximates that of NIMA city graphic and military city map products. Data coverages are boundaries, elevation, hydrography, industry, physiography, population, transportation, utilities, vegetation, and data quality.

UVMAP is designed to support geographic information systems. It is used as a data base for various situation and map background displays as well as a core data base for the spatial indexing of other information. The UVMAP will support MOUT and noncombatant evacuation operations.

Vector Map—Level 1

VMAP level 1 (VMAPL1) is designed to provide vector-based geospatial data at medium resolution (e.g., joint operations graphic equivalent information content and density). The VMAPL1 program separates data into 10 thematic layers and each layer contains thermatically consistent data. Data coverages are boundaries, elevation, hydrography, industry, physiography, population, transportation, utilities, vegetation, and data quality. VMAPL1 is designed to support geographic information systems and is used as a data base for various situation and map background displays.

Downloaded from http://www.everyspec.com

Vector Map—Level 2

VMAP level 2 (VMAPL2) is designed to provide vector-based geospatial data at high resolution (e.g., TLM equivalent information content and density). The VMAPL2 program separates data into 10 thematic layers and each layer contains thermatically consistent data. Data coverages are boundaries, elevation, hydrography, industry, physiography, population, transportation, utilities, vegetation, and data quality. VMAPL2 is designed to support geographic information systems. It is used as a data base for various situation and map background displays as well as a core data base for the spatial indexing of other information.

Vector Product Interim Terrain Data

Vector product interim terrain data (VITD) is designed to provide digital terrain analysis data for systems requiring compact disc read only memory. It consists of contiguous digital data sets covering specified geographic areas. These data sets are composed of attributed and unsymbolized feature information with enhanced transportation files. VITD is used by the topographic platoons to provide terrain analysis information that assists maneuver, fires, intelligence, and logistics planners in the performance of the following automated tasks:

- Terrain visualization.
- Route and site selection.
- Mobility and countermobility planning.
- Communications planning.
- Navigation.
- Fire support planning and execution.

Legacy NIMA Hard-Copy Products

City Graphic

A city graphic is a large-scale (1:12,500) lithographic map of populated places and environs portraying streets and route information. Features include important buildings, airfields, military installations, industrial complexes, embassies, government buildings, hospitals, schools, utilities, and places of worship. Militarily significant relief is shown. The city graphic is used to support administrative and tactical planning and operations for urban area operations.

Evasion Chart

The evasion chart is composed of 8 to 10 joint operations graphic (JOG) charts printed on both sides of waterproof, tear-resistant material. JOG ground charts are the preferred source; JOG air charts are used where JOG ground charts are not available. The chart's border and open water areas contain supplemental survival information such as plant identification, land navigation aids, survival techniques, ocean currents, time zones, winds, and weather.

The chart is designed to assist aircrewmen downed in hostile areas to survive, escape, and evade the enemy. It is distributed to aircrew members as part of standard survival equipment, and it folds for stowage in a flight suit or survival vest.

Harbor, Approach, and Coastal Charts

Harbor, approach, and coastal charts provide detailed navigational information that supports ships maneuvering in close-quarter areas. These charts assist in berthing and anchoring, keeping in the channel while entering and exiting port or navigating in close proximity to dangers associated with close shore and harbor approach areas.

Joint Operations Graphic—Air or Ground

JOG-air or ground (JOG-A/G) are the standard DOD medium-scale (1:250,000) maps. The JOG series is produced by several nations using the same product specification. The JOG-A/G displays topographic data (e.g., relief, drainage, vegetation, populated places, cultural features, coastal hydrography).

The JOG-A includes an aeronautical overprint depicting obstructions, aerodromes, special-use airspace, navigational aids, and related data. It supports tactical and other air activities including

Downloaded from http://www.everyspec.com

low-altitude visual navigation. The contour line elevation values on a JOG-A are reflected in feet.

The JOG-G supports ground forces employed in joint air and ground operations. It is used primarily for tactical and logistical planning as well as search and rescue. The contour line elevation values on a JOG-G are reflected in meters.

Operational Navigation Chart

The operational navigation chart (ONC) is the standard worldwide, small-scale (1:1,000,000) aeronautical chart series. It contains cartographic data with an aeronautical overprint depicting obstructions, aerodromes, special-use airspace, navigational aids, maximum elevation figures, and related data.

The ONC is designed for medium-altitude, high-speed, visual and radar navigation. In the absence of tactical pilotage charts, ONCs also satisfy en route visual and radar navigation requirements for low-altitude operations. It is used for mission planning and analysis and intelligence briefings. In addition, it is used as a source for navigational filmstrips and cockpit and visual display products.

Special Aeronautical Information Request

Special aeronautical information requests fill requirements for the latest information on airfields. These requests are satisfied usually by airfield photography and automated air facilities information file data.

Tactical Pilotage Chart

The tactical pilotage chart is the standard worldwide medium-scale (1:500,000) aeronautical chart series. It provides essential cartographic data. These charts are overprinted with stable aeronautical information such as obstructions, aerodromes, special-use airspace, navigational aids, maximum elevation figures, and related data. Because of the scale, some features are generalized (e.g., only the highest obstruction within an urban quadrant is shown). A military grid is overprinted on the chart for interoperability, especially in regions without JOG coverage.

These charts are designed for very low-altitude through medium-altitude, high-speed, visual, and radar navigation. They are used for mission planning and analysis and intelligence briefings. In addition, the charts are used in navigational filmstrips and cockpit and visual display products.

Topographic Line Map

The TLM is a lithographic map that portrays topographic and cultural information. It comes in two scales, 1:50,000 and 1:100,000. Relief is shown by contours and spot elevations, with values in meters. The map is a true representation of terrain detail (e.g., drainage, vegetation, populated places, cultural features, roads, railroads, and coastal hydrography. Primarily, TLMs are used by land and air forces in support of ground operations for planning and tactical operations.

Software Products

Digital Point Positional Data Base Point Drop Program

NIMA has developed the DPPDB point drop program software to use geographic point measurements from NIMA's DPPDB product. This software provides the capability to access, roam, zoom, and measure NIMA DPPDB image geographic point readings in monoscopic and stereoscopic modes.

Mapping Datum Transformation Software

Mapping datum transformation software (MADTRAN) is designed to convert map and chart coordinates from local geodetic datums to WGS-84 datums. MADTRAN is part of the mapping, charting, and geodesy utility software package.

Mapping, Charting, and Geodesy Utility Software

Mapping, charting, and geodesy utility software (MUSE) provides utilities for access to NIMA standard digital products. In addition to the core applications for NIMA data access, MUSE has demonstration applications that show the uses of

Downloaded from http://www.everyspec.com

NIMA digital data. MUSE applications can perform the following functions:

- Import raster and vector files.
- Display raster images for demonstrations and briefings.
- Fuse digital data.
- Convert map and chart coordinates from local geodetic datums to WGS-84 datums. Display line of sight perspective scenes.

Downloaded from http://www.everyspec.com

Appendix B

Geographic Intelligence Points of Contact

Organization	Mailing Address	Primary Billet	Phone Number	Fax Number
USMC GIMO	Director Marine Corps Intelligence Activity MCIA 05/GIMO 3300 Russell Rd, Suite 250 Quantico, VA 22134-5011	USMC GI&S officer Mapping officer	(703) 784-6151/ 2285 DSN: 278-6151/ 2285	(703) 784-2026
USMC GIMO	Director Marine Corps Intelligence Activity MCIA 05/NIMA CLO 3300 Russell Road, Suite 250 Quantico, VA 22134-5011	NIMA Marine Corps customer liaison officer	(703) 784-4525 DSN: 278-4525	(703) 784-2026
NIMA COTM	Director National Imagery and Mapping Agency Attn: COTM 12310 Sunrise Valley Drive Reston, VA 20191-3449	NIMA COTM	(703) 264-3001/4	(703) 264-3133
MARFORLANT	Commander Marine Corps Forces Atlantic (Attn: AC/S G-2 GI&S) PSC Box 20115 Camp Lejeune, NC 28542-0115	GI&S chief	(757) 836-1611 DSN: 836-1611	(757) 836-1609
MARFORPAC	Commander Marine Corps Forces Pacific Attn: AC/S G-2/GI&S Box 64116 Camp H. M. Smith, HI 96861-4116	GI&S chief	(808) 477-8454/5 DSN: 315-477-8454/5	(808) 477-0371
MARFORRES	Commanding General Attn: AC/S G-2/ISSB Marine Reserve Forces 4400 Dauphine Street New Orleans, LA 70146-5400	Intelligence Systems Support Branch chief	(504) 678-1189 DSN: 678-1189	(504) 678-4118
MARFOREUR	Chief of Staff Headquarters, U.S. Marine Corps Forces Europe CMR 445, Bldg. 2901 Panzer Kaserne APO AE 09046	Intelligence chief	(49) 703-115-375 DSN: 314- 431-2375	DSN: 314-431-2519
MARCOR SYSCOM	Commanding General Attn: Command Support Marine Corps Systems Command 2033 Barnett Avenue Quantico, VA 22134-5010	GI&S program manager	(703)784-3163 ext. 8077 DSN: 278-3163	(703)784-2929 DSN: 278-2929
I MEF	Commanding General Attn: AC/S G-2 GI&S Box 555300 I Marine Expeditionary Force Camp Pendleton, CA 92055-5300	GI&S chief GI&S specialist	(760) 725-9121/2 DSN: 365-9121/2	(760) 725-9170 DSN: 365-9170

Downloaded from http://www.everyspec.com

Organization	Mailing Address	Primary Billet	Phone Number	Fax Number
II MEF	Commanding General Attn: AC/S G02 GI&S II Marine Expeditionary Force PSC Box 20080 Camp Lejeune, NC 28542-0080	GI&S chief GI&S specialist	(910) 451-8080 DSN: 751-8080	(910) 451-8597 DSN: 751-8597
III MEF	Commanding General Attn: AC/S G-2 GI&S III Marine Expeditionary Force FPO, AP 96606-5601 Okinawa, Japan	GI&S chief GI&S specialist	011-81-611722-9325 DSN: 315-622-9325	011-81-611722-7769 DSN: 315-622-7769
MCIA GAB	Director Marine Corps Intelligence Activity MCIA 10C/GAB 3300 Russell Road, Suite 250 Quantico, VA 22134-5011	Section chief	(703) 784-6173 DSN: 278-6173	(703) 784-2026
1ST TOPO PLT	Platoon Commander 1st Topographic Platoon 1st Production and Analysis Company, 1st Intelligence Battalion Box 555321 Camp Pendleton, CA 92055-5321	Platoon commander Topo chief	(619) 725-9236/8 DSN: 365-9236/8	(619) 725-9237
2D TOPO PLT	Platoon Commander 2d Topographic Platoon 2d Production and Analysis Company, 2d Intelligence Battalion PSC Box 22113 Camp Lejeune, NC 28542-2113	Platoon commander Topo chief	(910) 451-2926 DSN: 750-2926	(910) 451-5522
3D TOPO PLT	Platoon Commander 3d Topographic Platoon 3d Production and Analysis Company, 3d Intelligence Battalion Unit 35607 FPO, AP 96606-5607	Platoon commander Topo chief	011-81-611723-4059 DSN: 315-623-4059	011-81-6117-23-7362
NIMA TECH REP (I MEF)	Commanding General Attn: AC/S G-2/GI&S (NIMA Tech Rep) Box 555300 I Marine Expeditionary Force Camp Pendleton, CA 92055-5300	NIMA technical representative	(760) 725-9133 DSN: 365-9133	(760) 725-9170
NIMA TECH REP (II MEF)	Commanding General Attn: AC/S G-2/GI&S (NIMA Tech Rep) II Marine Expeditionary Force PSC 20080 Camp Lejeune, NC 28542-0080	NIMA technical representative	(910) 451-8557 DSN: 751-8557	(910) 451-8597
NIMA TECH REP (III MEF)	Commanding General Attn: AC/S G-2/GI&S (NIMA Tech Rep) III Marine Expeditionary Force FPO, AP 96606-5601 Okinawa, Japan	NIMA technical representative	011-81-611722-9325 DSN: 315-622-9325	011-81-611722-7769

Downloaded from http://www.everyspec.com

Appendix C

GI&S and GEOINT Tasks

No	Tasks	GI&S					GEOINT			
		GIMO/MCIA	MARFOR	MEF G-2	MSC G-2	MEU S-2	Topo Plt, Intel Bn	GIST	GIT	GAB/MCIA
1	Coordinate and assist in the recruitment and organization of Marine Corps geospatial information and services (GI&S) assets to conduct two nearly-simultaneous major regional conflicts.	X								
2	Determine GI&S support requirements for development, test and evaluation, and training of emerging forces, weapons, and systems in accordance with Department of Defense (DOD) Instruction 5000.56, *Programming Unique Mapping, Charting, and Geodesy (MC&G) Requirements for Developing Systems*.	X								
3	Provide professional and technical advice and assistance to the Headquarters, U.S. Marine Corps (HQMC), Assistant Chief of Staff (AC/S), Command, Control, Commuters, Communications, and Intelligence (C4I), Marine Corps Combat Development Command (MCCDC), Marine Corps Systems Command (MARCORSYSCOM), Marine Corps University, Marine Corps Warfighting Lab, and Marine Corps Intelligence Agency (MCIA) on matters pertaining to GI&S and the production and usage of geographic intelligence (GEOINT).	X								
4	Coordinate doctrine for employment of Marine Corps GI&S assets.	X	X							
5	Assist Marine Corps forces (MARFOR) with identification of procedures and responsibilities for intratheater distribution operations required to support deploying and deployed forces.	X	X	X						
6	Develop and implement a Marine Corps GI&S strategic plan to build, manage, and disseminate a dynamic master geospatial data base.	X	X							
7	Evaluate continually command GI and GEOINT requirements.	X	X	X	X	X	X			
8	Develop a plan for receiving support from National Imagery and Mapping Agency (NIMA), the theater data base manager, other Services, host nation, allied forces, as well as assigned and supporting topographic assets.	X	X	X	X	X				
9	Coordinate GI&S support plans with the intelligence collection, production, and dissemination plans to facilitate GI&S access to national, theater, and organic imagery systems, as well as other external intelligence assets.	X	X	X	X	X	X			
10	Assign responsibility for management of the Marine Corps geospatial information library (MCGIL). State how often the data base is updated, how the media will be used, and how the dissemination will occur.	X	X	X		X				
11	Coordinate information flow to theater, MARFOR, Marine expeditionary units', and NIMA's national library.	X	X	X		X	X			
12	Coordinate MAGTF's user evaluations of digital and hard-copy maps, charts, and related products. Provide response to Geospatial Information Management Office (GIMO), MCIA, for consolidation.	X	X	X			X			

Downloaded from http://www.everyspec.com

No	Tasks	GI&S					GEOINT			
		GIMO/MCIA	MARFOR	MEF G-2	MSC G-2	MEU S-2	Topo Plt, Intel Bn	GIST	GIT	GAB/MCIA
13	Coordinate with higher, adjacent, and subordinate commands for GI&S production requirements to reduce duplication of effort and to coordinate the establishment of the geospatial framework for the common operational picture (COP) and common tactical picture (CTP).	X	X	X		X	X			
14	Coordinate with Geospatial Analysis Branch (GAB), MCIA, to identify requirements of GEOINT products in support of the intelligence preparation of the battlespace (IPB) process and file structure architecture.	X	X	X		X	X			
15	Ensure availability of GI&S products to support the command element and subordinate elements during an operation.	X	X	X	X	X	X			
16	Receive, validate, and task requirements for cartographic, geodetic, and terrain analysis products from the intelligence operation officer or collection manager.	X	X	X	X	X	X			
17	Coordinate the development and dissemination of GI and GEOINT products with intelligence battalion (intel bn) and topographic platoon (topo plt).			X		X	X			
18	Coordinate with NIMA, other Services, GAB (MCIA), and subordinate topo plts and P&A cell for GI&S to establish production requirements, to reduce duplication of effort, and to coordinate the establishment of the geospatial framework for the COP and CTP.	X	X	X			X			
19	Coordinate with higher, adjacent, and subordinate commands for GI&S production requirements to reduce duplication of effort and to coordinate the establishment of the geospatial framework for the COP and CTP.		X	X	X	X	X			
20	Determine Marine Corps-specific training, Marine Corps new systems research and development, and Marine Corps intelligence GI&S requirements in accordance with chairman joint chiefs of staff (CJCS) and NIMA directives and instructions. Assist Marine operating forces with identification of operational requirements for GI&S support.	X	X	X	X	X				
21	Coordinate with HQMC, Installations and Logistics (I&L), to define procurement, storage, and dissemination of hard-copy GI&S products, in accordance with NIMA and Defense Logistics Agency (DLA) instructions.	X	X	X		X				
22	Propose selected GI&S programming issues for evaluation in the Marine Corps and DOD program assessments.	X	X							
23	Coordinate with MARCORSYSCOM for the development and fielding of GI&S systems and software.	X	X	X						
24	Assist data collection programs by clearly prioritizing support needs and deconflicting source requirements with the responsible agency or Service when NIMA identifies GI&S shortfalls in data sources resulting from competition for source (e.g., imagery or ship surveys).	X	X	X						
25	Task the P&A cell and topo plt with development of Tab A, Tactical Study of Weather and Terrain; Tab B, Helicopter Landing Zones; and Tab C, Helicopter Landing Zones of Appendix 11 to the intelligence estimate.			X			X			
26	Maintain a planning factors data base (PFDB) to identify and track MARFOR, systems, and weapons requiring geospatial information (GI) and/or GEOINT.	X	X	X			X			

Downloaded from http://www.everyspec.com

No	Tasks	GI&S					GEOINT			
		GIMO/MCIA	MARFOR	MEF G-2	MSC G-2	MEU S-2	Topo Plt, Intel Bn	GIST	GIT	GAB/MCIA
27	Coordinate with HQMC (C4I) to define and establish communications network requirements for electronic dissemination of GI and GEOINT throughout the MAGTF.	X	X	X			X			
28	Coordinate with MCCDC for the development and integration of Marine Corps GI&S architectures in support of national, DOD, theater, multi-Service, naval, and MAGTF interoperability.	X	X	X						
29	Define common GI&S standards for the direct transmission and maintenance of GI and GEOINT to ensure interoperability between MAGTFs, DOD, federal agencies, and other joint or coalition forces.	X	X	X			X			
30	Coordinate and forward the Marine Corps recommendations on GI&S product specifications and standardization agreements to NIMA.	X								
31	Coordinate and submit consolidated Marine Corps evaluations of prototype digital and hard-copy maps, charts, and related products to NIMA.	X								
32	Review and comment on GI&S product specifications and standardization agreements.		X	X			X			
33	Identify and validate war reserve stock (WRS) requirements for the command element and subordinate commands.		X	X						
34	Identify, validate, and maintain the WRS planning allowance for the command element.		X	X						
35	Coordinate with G2, G3, G-4, G-5, and G-6 to identify requirements of GEOINT products in support of the IPB process.		X	X						
36	Coordinate and task all production to appropriate joint intelligence center (JIC) and joint analysis center (JAC) or MCIA in accordance with Marine Corps procedures identified in chapter 4 of this publication.		X							
37	Coordinate with the G-6/S-6 to establish communication and information systems network requirements for electronic dissemination of GI and GEOINT throughout all levels of the MAGTF.			X			X			
38	Assist G-4/S-4 in the identification of procedures and responsibilities for intratheater distribution operations required to support deploying and deployed forces.		X							
39	Coordinate with the G-4/S-4 for procurement, storage, and dissemination of hard-copy GI&S products, in accordance with NIMA and DLA instructions.			X			X			
40	Submit and coordinate with the imagery and mapping I&M section, MEF G-2, for review and completion of Appendices 11 and 15 of Annex B and Annex M for each operation plan and contingency plan.		X				X			
41	Draft Appendix 11 to Annex B, the GEOINT Estimate, and Annex M, GI&S to an operation order.		X							
42	Coordinate MARFOR GI&S activities with the appropriate combatant commands. This coordination includes, but is not limited to: determining and developing GI&S area requirements; implementing GI&S plans, policies, procedures, and programs; and maintaining liaison with NIMA.		X							

Downloaded from http://www.everyspec.com

No	Tasks	GI&S					GEOINT			
		GIMO/MCIA	MARFOR	MEF G-2	MSC G-2	MEU S-2	Topo Plt, Intel Bn	GIST	GIT	GAB/MCIA
43	Coordinate Marine expeditionary force (MEF) GI&S activities with the appropriate combatant commands. This coordination includes, but is not limited to: determining and developing GI&S area requirements; implementing GI&S plans, policies, procedures and programs; maintaining liaison with NIMA.		X	X						
44	Determine operational GI&S requirements in accordance with CJCS and NIMA directives and instructions for all operation plans and contingency plans. Forward requirements to MARFOR for submission to appropriate combatant commands.		X	X						
45	Provide recommendations to NIMA and MARFOR concerning GI&S planning required to ensure that MAGTFs can support operations.	X	X	X						
46	Provide recommendations to the I&M section concerning GI&S planning and training required to ensure that MAGTFs can support operations.	X	X							
47	Develop and implement a command GI&S operational plan to build, manage, and disseminate a dynamic geospatial data base. The plan should include receiving support from the MEF topo plt, NIMA, JIC/JAC, theater data base manager, MCIA, host nation, allied forces, as well as assigned and supporting topographic assets. Assign responsibility for management of the major subordinate command (MSC) GI&S data base. State how often the data base will be updated, how the media will be used, and how the dissemination will occur. Address information flow back to theater, NIMA, and MCIA.	X	X	X			X			
48	Provide management oversight for the production of GI covering the Marine Corps global data base based on the Marine Corps Midrange Threat Estimate (current year) and priorities input by the MARFOR and MEF intelligence divisions.	X	X	X		X				X
49	Collect, integrate, analyze, synthesize, and disseminate terrain information as GEOINT to support MAGTF commanders.						X	X	X	X
50	Validate requirements for GI and GEOINT production, as well as geodetic and topographic surveys. Coordinate and task all production to appropriate topo plt, P&A cell, JIC/JAC, or MCIA in accordance with Marine Corps procedures identified in chapter 4 of this publication.		X	X		X	X			
51	Manage the MAGTF tactical geospatial information library (TGIL) data base under the authority of the AC/S, Intelligence, and in accordance with direction and guidance from the MAGTF I&M section.			X			X			
52	Manage Marine Corps geospatial information library (MCGIL) under the authority of the AC/S C4I, and in accordance with direction and guidance from GIMO, MCIA.	X								X
53	Conduct topographic surveys in conjunction with geodetic surveys, to accurately collect and produce GI.						X			
54	Conduct high-order, ground-control surveys in support of geospatial collection, weapons delivery systems, line-of-sight (LOS) communications, and inertial navigation systems.						X			
55	Conduct intensification, scale changes, enlargements, or reductions of an existing digital (or hard-copy) product.						X	X	X	X
56	Produce terrain analysis products (i.e., beach studies, port and harbor studies, cross-country movement studies, transportation studies, etc.) to provide GEOINT to the commander.						X	X	X	X

Downloaded from http://www.everyspec.com

No	Tasks	GI&S					GEOINT			
		GIMO/MCIA	MARFOR	MEF G-2	MSC G-2	MEU S-2	Topo Plt, Intel Bn	GIST	GIT	GAB/MCIA
57	Produce a quick map substitute to fill a need where no acceptable product exists, using NIMA data bases (controlled image base and digital terrain elevation data) to generate an interim product. (This may require external reproduction support.)						X	X	X	X
58	Develop special beach penetration charts that includes hydrographic approach and topographic data.						X	X	X	X
59	Analyze port and harbor data to support the maritime prepositioned force pier side and in-stream unloading operations.						X	X	X	X
60	Intensify and analyze riverine data to create products using identification of bridging, ferrying, and fording sites and using the river as a line of communication.						X	X	X	X
61	Intensify and analyze coastal hydrographic data to support the MAGTF's operational plan and objectives for ship-to-objective maneuver. Integration of terrain, coastal, and environmental data provides a seamless, deconflicted data base to support amphibious operations within the littorals.						X	X	X	X
62	Provide rapid updated products and information for dissemination to deploying forces.						X	X	X	X
63	Produce, analyze, and integrate port and harbor, coastal, beach, and riverine survey data in support of imminent and future amphibious landings and subsequent operations ashore.						X			X
64	Integrate information from topo plt high-order, ground-control surveys in support of geospatial collection, weapons delivery systems, LOS communications, and inertial navigation systems.						X	X	X	X
65	Manipulate, analyze, supplement, and compliment NIMA GI to create special products for the Marine Corps with tailored, mission-specific views of the area of operations.						X	X	X	X
66	Analyze multi-spectral and hyperspectral data to collect GEOINT features and attributes for intensification and updating NIMA standard products to support a specific mission as an interim or to substitute products when standard geospatial data is unavailable.						X	X	X	X
67	Provide analysis of the littoral zones to reduce the uncertainties regarding the effects of natural and manmade features on military operations.						X			X
68	Collect, integrate, analyze, synthesize, and disseminate terrain information as GEOINT to support MAGTFs requirements within the littorals.						X	X	X	X
69	Manipulate and analyze NIMA geospatial data bases to tailor special products for the MAGTF commander.						X	X	X	X
70	Provide initial reference points on airfields for Marine aircraft to initialize aviation combat element (ACE) on board inertial navigation systems.						X			
71	Provide initial baseline survey control within the theater of operations, with azimuth, for ground combat element (GCE) or ACE weapon delivery systems.						X			
72	Provide initial survey control points, with azimuth, for Marine air support squadrons to position ACE radars.						X			

Downloaded from http://www.everyspec.com

No	Tasks	GI&S					GEOINT			
		GIMO/MCIA	MARFOR	MEF G-2	MSC G-2	MEU S-2	Topo Plt, Intel Bn	GIST	GIT	GAB/MCIA
73	Provide LOS survey support for command element, GCE, ACE, and combat service support element ground communication equipment.						X			
74	Coordinate and assist in the training of Marine Corps GI&S support forces to conduct two nearly-simultaneous major regional conflicts.	X	X	X						
75	Receive and validate standard GI&S products requirements for exercises and consolidate a single requisition to NIMA not later than 3 months prior to required delivery date.		X	X		X	X			
76	Receive and validate nonstandard GI&S production requirements for exercises. Those products not listed in NIMA catalog (e.g., special exercise products) must be submitted to the I&M section 6 months prior to the required delivery date.	X	X	X		X	X			
77	Provide airfield surveys to support global positioning system approach requirements for ACE aircraft.						X			
78	Assess NIMA responsiveness to Marine Corps needs.	X	X	X	X	X	X	X	X	X
79	Continually evaluate and improve the Marine Corps GI&S and GEOINT requirements and supporting plans and operations.	X	X	X	X	X	X	X	X	X
80	Notify the MEF G-2 I&M section and intelligence battalion, of all GI and GEOINT requirements (electronic, digital, and hard-copy) necessary to support combat analysis simulations and exercises.	X	X	X	X	X	X	X	X	X
81	Notify the MEF G-2 I&M section and intelligence battalion, of all GI and GEOINT requirements (electronic, digital, and hard-copy) necessary to support combat analysis planning, and operations.	X	X	X	X	X	X	X	X	X
82	Coordinate with the MEF G-2 I&M section and intelligence battalion, to establish prioritization for collection, production, and dissemination of GI and GEOINT products, data bases, and services for exercises.	X	X	X	X	X	X	X	X	X
83	Coordinate with the MEF G-2 I&M section and intelligence battalion, when involved with the procurement, development, or use of GI&S systems or data bases.	X	X	X	X	X	X	X	X	X
84	Provide professional and technical advice and assistance to the command element/ supported headquarters and subordinate commands on matters pertaining to GI&S and GEOINT.	X	X	X			X	X	X	X
85	Coordinate with the MEF G-2 I&M section when involved with the procurement, development, or use of GI&S systems or data bases to support simulations and other analysis	X	X	X	X	X	X			X
86	Request standard NIMA GI&S products and digital GI&S data for local unit training via local units supply office.	X	X	X	X	X	X	X	X	X

Downloaded from http://www.everyspec.com

Appendix D

Topographic Production Capability

The Topographic Production Capability (TPC) provides the MAGTF with integrated, intensified, deconflicted, and seamless geospatial information and geographic intelligence (GEOINT). These are necessary to provide the framework for the common operational picture (COP) and the common tactical picture (CTP) required by a wide variety of missions, systems, and weapons.

The TPC is a network of geographic information systems that provides the MAGTF with the ability to receive, store, retrieve, process, exploit, analyze, produce, disseminate, store, and retrieve geospatial information and GEOINT. Comprised of state-of-the-art hardware, software, and input and output devices, the TPC will provide automated access to the geospatial data base and other GEOINT products. It will be employed in command posts, combat intelligence centers, and the intelligence operation center (IOC), and will be connected to the MAGTF tactical data network (TDN), the United States Imagery and Geospatial Information System (USIGS), and the Global Command and Control System (GCCS).

TPC will significantly reduce the physical size and logistical footprint of the existing topographic platoons' equipment suite. The hardware components will be modular and man transportable. This capability provides the topographic platoon with the means to scale up or down, depending on the type of mission, size of the force, and specified geospatial and GEOINT requirements.

The equipment suite will include robust communications software and compatibility with all military communications requirements and will provide access to multi-spectrum data communications. The processing and display modules will use hardware from the Marine common hardware suite and software that is compliant with the defense information infrastructure common operating environment (DII COE).

Marine Corps emerging operational concepts require an integrated, deconflicted, and seamless view of the battlespace and topographic assets capable of being operated from a variety of ships and austere bases ashore. Under these concepts, some command and control nodes and elements may remain seabased while others go ashore to better support MAGTF elements. TPC will allow the G-2/S-2 to task-organize to perform a variety of missions while remaining fully integrated with naval systems, forces afloat, and joint and allied forces throughout the joint operating area.

Normally used in intelligence centers of supported units, the TPC will be employed by accessing existing communications media (e.g., radio, wire, fiber optic cable, local and wide area networks) and circuit and voice switching systems that form a MAGTF-wide tactical data network and information grid.

The modularized nature of TPC equipment provides the following employment options:

- Topographic set (TOPSET). The entire TOPOSET will be deployed by intelligence battalion with the MEF command element. It will maintain connectivity to the combatant command's joint intelligence and/or analysis centers, Marine Corps Intelligence Activity, and other geospatial information and services (GI&S), GEOINT, and intelligence elements via the GCCS and MAGTF TDN.
- Digital terrain analysis mapping set (DTAMS). Generally, a DTAMS is organic to a GEOINT support team. The team may be attached to or placed in direct support of the ground combat element, aviation combat element, and combat service support element intelligence sections. Connectivity is similar to TOPOSET.

Downloaded from http://www.everyspec.com

- Geospatial information and replication system (GIRS). Generally, a single GIRS is organic to the GEOINT team. The team is attached to a Marine expeditionary unit (special operations capable) command element. Connectivity is similar to TOPOSET and DTAMS.

The TPC will increase the MAGTF's capabilities to—

- Receive, exploit, analyze, and disseminate a common, near-real-time integrated environmental view of the battlespace with the timeliness and accuracy necessary to facilitate command and control, intelligence, maneuver, fires, and logistics.
- Access theater and national geospatial information sources to support a COP and CTP tailored to MAGTF missions.
- Enhance mobility of the TPC nodes and improve support for the operational maneuver from the sea concept by reducing the physical size and increasing the modularity of the TPC equipment.
- Increase interoperability by using an open architecture and DII COE-compliant systems.
- Increase operational flexibility by using common hardware and software that supports the task organization and distributed production of all geospatial information for the MAGTF.
- Participate in a joint, fused GEOINT production network with multilevel security and accurate data.

To provide the MAGTF with battlespace visualization and the framework necessary to plan future tactical operations, the TPC can be broken down into the following functional roles:

- Geospatial information and GEOINT direction is accomplished through the deliberate planning process. TPC helps identify geospatial requirements, access and review existing data holdings, identify information shortfalls, and define the area of responsibility and interest.
- Geospatial information collection begins with the requisition of essential elements of terrain and hydrographic information. TPC data base networks would be queried for potential solutions, source materials, and request for information for tactical collection. The TPC must support the inclusion of environmental information from multisource intelligence reports (e.g., imagery, signals, and human intelligence) In addition, it must be able to access tactical reconnaissance reports (e.g., route reconnaissance, bridge studies, engineering reports). Further, the TPC must be able to store and manipulate tactical geodetic, topographic, and oceanographic surveys, terrain reconnaissance, and photo reconnaissance imagery, including video.
- Geospatial information processing provides the capability to retrieve, integrate, deconflict, and store multisource geospatial information into a seamless data base.
- GEOINT analysis and production provides the capability to analyze integrated data bases for specific applications, to value-add information or to update features and attributes within the data base, and to intensify the data base content to meet a tailored mission requirement. End-state production will include the geospatial information data set covering the world's littorals for the framework of a COP and CTP, the modified combined obstacle overlay (foundation for intelligence preparation of the battlespace), and the mission-specific views (e.g., cross-country movement, helicopter landing zones, and beach studies) critical for providing tailored GEOINT requirements.
- GEOINT dissemination uses an open technical architecture that has evolved within the USIGS and the joint technical architecture. TPC will disseminate geospatial data external to Marine Corps forces through the GCCS and the Global Broadcast System. It will disseminate Marine Corps forces geospatial data within and external to a theater using the MAGTF TDN and local and wide area networks. The TPC must maintain redundant communication capabilities to support electronic dissemination. Local replication (limited copies) and National Imagery and Mapping Agency lithographic reproduction

Downloaded from http://www.everyspec.com

(large quantity) will be used for dissemination of hard-copy GEOINT products to units not capable of receiving geospatial data digitally. This approach reduces development and maintenance costs and achieves interoperability within all functional system requirements for visualization.

- Information systems and data base management.

Downloaded from http://www.everyspec.com

Appendix E

GEOINT Estimate
(Appendix 15 to Annex B to OPLAN/OPORD)

The GEOINT estimate is a major contributor to the intelligence estimate and a key foundation for the MAGTF's selection of a course of action (COA) and follow-on planning. The MEF G-2 future plans section, I&M staff, and intelligence battalion complete an appraisal of available GI&S on a specific situation or mission and address those in the operation plan (OPLAN) or operation order (OPORD). This GEOINT is used to help determine the supportability of COAs. COA wargaming and selection depends on the MAGTF's GI&S and GEOINT requirements for planning and execution. The GEOINT estimate also provides a detailed format to support development of the collection, production, and dissemination plans for geospatial information and MAGTF GEOINT operations. The following key points are emphasized for GEOINT estimate development.

Analysis of COA

The GEOINT estimate provides the MAGTF intelligence officer a focus to evaluate various courses of action against available geospatial information sources and to identify critical shortfalls within the scope of the operation. The estimate identifies essential elements of terrain information (EETIs) and intelligence requirements (IRs) that could negatively affect planned operations to the MAGTF commander and staff. The estimate also identifies GI&S personnel and equipment shortfalls and unique GEOINT collection, production, and dissemination requirements to meet mission objectives.

Intelligence Preparation of the Battlespace

The GEOINT estimate will support initial intelligence estimates and collections, production, and dissemination planning for the IPB process during initial planning. Identification of the area of operations (AO) and area of interest (AOI) is critical for prioritization, intensification, and value-adding to meet mission-specific requirements. The IPB process analysis and production time lines require that the estimate identify potential objectives, intelligence requirements (IR), and specific EETIs. This ensures that tailored products are available to support all MAGTF planning and decisionmaking requirements.

Distributive and Collaborative Production Network

The GEOINT estimate will provide critical intelligence to support the development of the geospatial information infrastructure in support of the MAGTF. This will allow the MAGTF plans staff and intelligence battalion to identify key MAGTF communications and information systems requirements and to coordinate collaborative support from other GEOINT assets (e.g., geospatial analysis branch) as well as the national production network.

Downloaded from http://www.everyspec.com

Risk Mitigation and Assessment

Within the joint GI&S community, risk mitigation encompasses activities accomplished early in deliberate planning. Only when an operation plan is activated will National Imagery and Mapping Agency (NIMA) conduct a risk assessment to apprise the supported combatant commander of the pertinent GEOINT production plans and activities status.

The GEOINT estimate provides a process for the MAGTF G-2 staff and intelligence battalion to perform a risk assessment for each COA based on available GEOINT. Mission success or failure depends on the types of GI&S data available for specific missions and systems used in the MAGTF. Availability of GI&S products is evaluated based on the following priorities and readiness levels.

Priorities

This process is used to determine an appropriate level of readiness required for the plan based on likelihood of execution and calculation of preparation times based on MAGTF IRs and indications and warning.

- Priority 1. GEOINT data and product unavailability will prevent performance of mission.
- Priority 2. GEOINT data and product unavailability will significantly impact performance of mission.
- Priority 3. GEOINT data and product unavailability will have minor impact on performance of mission.

Readiness Level

The GEOINT estimate is a planning tool which the MEF G-2 and intelligence battalion uses to determine how much effort is required for a particular OPLAN to meet MAGTF requirements. This information is articulated to the joint task force or combatant command's GI&S officer and other intelligence personnel using the following GI&S readiness levels:

- C-1. All required products and information must exist as standard or substitute products and information. All products can be made adequate and delivered within the time required for the plan.
- C-2. All priority 1 and 2 products and information must exist as either standard or substitute products and information, or interim products and information can be generated and delivered within the command's required time line. Deficiencies exist in the coverage of priority 3 products and information. Priority 1 and 2 products and information can be made adequate within the required time line based on each plan. Existing priority 3 products and information cannot be made adequate within the required time for each plan.
- C-3. All priority 1 products and information must exist as either standard or substitute products and information, acceptable interim products and information or can be generated and delivered within the command's required time. Significant deficiencies exist in the coverage of priority 2 and 3 products and information. Existing products and information cannot be made adequate within the required time for each plan.
- C-4. Major deficiencies may exist for priority 1, 2 or 3 products.

- The following sample GEOINT estimate format is provided to support MAGTF intelligence estimate and follow-on planning and decisionmaking.

Downloaded from http://www.everyspec.com

The following sample GEOINT estimate format is provided to support MAGTF intelligence estimate and follow-on planning and decisionmaking.

CLASSIFICATION

Copy no. ___ of ___ copies
Issuing Unit
PLACE OF ISSUE
Date/time group
Message reference number

APPENDIX 15 (GEOGRAPHIC INTELLIGENCE ESTIMATE) TO ANNEX B (INTELLIGENCE) TO OPERATION ORDER

(U) REFERENCES

(a) Unit standing operating procedures for intelligence and counter-intelligence
(b) (List those NIMA maps, charts, related products, and other forms of GI&S data references required for an understanding of this appendix.)
(c) (List other documents that provide guidance required for the planning functions relevant to GI&S and supporting operations.)

1. (U) Mission. (State the assigned task and its purpose. The mission of the command is taken from the commander's mission analysis, planning guidance, or other statement.)

2. (U) Situation.

a. (U) Definition of the AO and AOI. (Describe the limits of the AO and AOI in terms of natural or cultural features and/or latitude and longitude co-ordinates. If the AO limits are difficult to describe, a map with the appropriate boundaries should be appended.)

b. (U) Assigned MAGTF Organic and Supporting GI&S Assets. (Identify those organic and supporting forces which perform the following GI&S functions. A unit may perform more than one function.)

(1) (U) Map and chart distribution.

(2) (U) Digital dissemination of data.

(3) (U) Battlespace analysis.

(4) (U) Paper map or chart production.

Page number

CLASSIFICATION

Downloaded from http://www.everyspec.com

CLASSIFICATION

(5) (U) Digital data production.

(6) (U) Geodetic surveying.

(7) (U) Command and control (C2) of GI&S assets.

(8) (U) Geospatial data base management.

(9) (U) Value-adding to GI&S data sets.

(10) (U) Construction of modeling and simulation data bases.

c. (U) Facts and Assumptions. (State facts and assumptions generated during the mission analysis process. These may include items pertaining to release and disclosure of GI&S products to multinational forces, transportation availability, and available digital communications.)

d. (U) GI&S Considerations

(1) (U) Datum determination.

(2) (U) Standard GI&S product and data availability.

(3) (U) Data currency.

(4) (U) Availability of national source imagery and commercial imagery.

(5) (U) GI&S support to and from multinational forces.

(6) (U) Existing GI&S agreements between foreign countries.

(7) (U) War reserve stock (WRS) and basic load considerations.

(8) (U) Sustainment of geospatial data.

(9) (U) Sustainment of GI&S assets and personnel.

(10) (U) Creation and manning of forward map depots.

(11) (U) Other considerations which impact this OPLAN or OPORD.

Downloaded from http://www.everyspec.com

CLASSIFICATION

3. (U) Analysis of Course of Action. (List factors the intelligence officer and his three key subordinate officers—the G-2 plans officer, G-2 operations officer, and the intelligence support coordinator—can use to weigh COAs for a given OPLAN or OPORD. Develop a separate analysis for each COA being considered.

a. (U) GI&S Forces and Functions. (Discuss employment of forces to cover the GI&S functions.)

b. (U) Datums and Interoperability. (Compare forces and systems to the actual geographic footprint of the AO and its associated data.)

c. (U) Allied and Coalition Operations

(1) (U) (Discuss allied and/or coalition operations.)

(2) (U) (State the release authority.)

(3) (U) (Discuss reduced system capability.)

(4) (U) (List datum differences.)

(5) (U) (Identify global positioning system capability.)

d. (U) Geospatial Information Coverage. (List the available geospatial data for the AO.)

e. (U) NIMA Surge and Crisis Production Supportability. (Discuss NIMA's surge print ability and production operations to support MAGTF requirements within the COA.)

f. (U) MCIA Surge and Crisis Production and Analysis Supportability. (Discuss MCI's surge analysis ability and production operations to support MAGTF requirements within the COA.)

g. (U) GI&S Distribution and Digital Dissemination. (Discuss the alternatives for distributing paper products, digital media, and electronic dissemination for each COA.)

h. (U) C2 of GI&S Assets. (Discuss the following aspects of the plan from the C2 perspective.)

Page number

CLASSIFICATION

Downloaded from http://www.everyspec.com

CLASSIFICATION

(1) (U) Integration and synchronization of the theater production and analysis plan across all forces in support of MAGTF requirements.

(2) (U) Distributive and collaborative production support.

(3) (U) Tasking and prioritization authority.

i. (U) Unit Basic Loads and WRS. (Discuss operational forces' requirements for paper and digital geospatial data and available stocks.)

4. (U) Comparison Courses of Action. (Using the stated factors and other information, either the G-2 plans officer or the ISC compares the COAs to advise the G-2/S-2 and commander if GI&S capability will support execution of the OPLAN or OPORD.)

5. (U) Conclusion. (Once the analysis is complete, the G-2 plans officer or the ISC either recommends to the G-2/S-2 a single COA or states that none of the COAs are impacted by the current GI&S situation.)

6. (U) Planning Requirements. (Provide a clear, concise statement of the GI&S planning requirements to support the plan.)

7. (U) Execution Requirements. (Provide a clear, concise statement of the GI&S operations execution requirements to support the plan.)

/s/ _____

_____

TABS: (As appropriate.)

Downloaded from http://www.everyspec.com

Appendix F

GI&S Planning Activities

The following list identifies key actions of the MAGTF command element (CE) staff and geospatial information and services (GI&S) actions of the intelligence section, the G-2 I&M staff, and intelligence battalion during each phase of the Marine Corps Planning Process (MCPP). **NOTE:** The following columns list all key actions associated with the column title. There is, however, no direct linkage between, for example, the third item listed under each—all actions are interrelated as influenced by METT-T.

Mission Analysis	
MAGTF Staff Actions	**GI&S Action**
Identify the higher headquarters and supported headquarters intent.	Review higher headquarters and MAGTF standing intelligence plans (e.g., Annex B to the OPLAN) and GI&S plan (e.g., Annex M to an OPLAN), pertinent memorandums of understanding, etc.
Identify tasks.	Help determine the MAGTF AO and AOI. Assess NIMA, combatant commands, and other external organizations' geospatial coverage of the AO and AOI.
Determine the area of operations (AO) and area of interest (AOI).	Provide maps, charts, digital data, and other GI and GEOINT products to ensure subordinate commanders' initial planning support needs are met.
Review available assets and identify personnel and equipment resource shortfalls.	Determine specified, implied, and essential GI&S tasks.
Determine constraints and restraints.	Develop proposed GI&S mission statement; coordinate with intelligence battalion; obtain G-2/S-2 approval.
Determine commander's recommended critical information requirements (e.g., priority intelligence requirements, friendly force information requirements, essential elements of friendly information).	Identify organic and supporting GEOINT elements and subordinate units' GI&S representatives; acquire an operational status report from each representative; determine personnel and equipment deficiencies. Pay special attention to data management, value-adding, production, and distribution.
Identify requests for information.	Determine if datum issues exist; provide recommendations.
Determine assumptions.	Identify joint task force (JTF) and multinational GI&S interoperability issues; provide recommendations.
Draft the mission statement.	Establish, review, and/or update the MAGTF tactical geospatial information library (TGIL) to— • Assess foundation data (FD) availability and deficiencies. • Determine mission specific data set (MSDS) requirements. • Determine initial GI&S information requirements; coordinate with intel bn's collections management and dissemination (CMDO) officer. • Identify other GEOINT product substitutes. Identify external organizations' GEOINT production plans and assess against MAGTF's initial requirements; determine deficiencies; initiate augmentation requests; coordinate with support coordinator and the production and analysis (P&A) cell IOC.
Present a mission analysis brief.	
Draft the warning order.	
Begin staff estimates.	
Refine the commander's intent.	
Develop the commander's planning guidance.	

Downloaded from http://www.everyspec.com

Mission Analysis - Continued	
MAGTF Staff Actions - Continued	**GI&S Action - Continued**
	Assign and task-organized organic GEOINT elements (e.g., geographic intelligence support teams to major subordinate elements; geographic intelligence team to the MAGTF future plans team), stipulate C2 relationships. Validate and update JTF GI&S TTP, and MAGTF GI&S standing operating procedures; coordinate with higher headquarters and subordinate units. Validate and prioritize GI&S and GEOINT requirements; focus on requirements for developing COA and wargaming. Begin development of GEOINT estimate; issue orders to GEOINT production elements; coordinate with P&A cell OIC. Coordinate preparation of initial modified combined obstacle overlay; coordinate with P&A cell OIC. Determine initial GEOINT communications and information systems (CIS) requirements and dissemination plan; identify deficiencies; coordinate with CMDO and G-6/S-6. Validate GI&S data base management procedures; coordinate with JTF. Ensure subordinate units' GI&S representatives are kept advised of pertinent actions and developments.

Course of Action Development	
MAGTF Staff Actions	**GI&S Actions**
Continue intelligence preparation of the battlespace throughout all steps of the planning process. Array friendly forces. Assess relative combat power. Analyze centers of gravity and critical vulnerabilities. Brainstorm possibilities. Develop rough course(s) of action (COAs). Review commander's input. Refine COA(s). Validate COA(s). Develop graphic and narrative COA(s). Prepare and present COA(s) briefing. Select and/or modify COA(s) (commander's action).	Help to develop and continue to update the intelligence estimate (appendix 11 to annex B); emphasize the following GEOINT and all-source intelligence products: • Tactical study of the terrain. • Hydrographic, beach, HLZ, DZ, port and harbor, airfield, and LOC studies. • Modified combined obstacle overlays. Assist the MAGTF CE intelligence section, other staff sections, and the ISC/IOC with COA development. Develop a GI&S concept of operations for each COA; continue to prepare and update— • Appendix 15 (GEOINT Estimate) to Annex B. • Annex M (Geospatial Information and Services). Help the intell section develop other portions of Annex B. Determine the need and plan for the establishment of map depots within the joint operation area; determine the use of war reserve stocks (WRS); coordinate with JTF and other service and functional components. For each COA— • Determine GI&S capabilities required. • Identify limitations. • Coordinate production of necessary GEOINT products. • Continue development of GI&S estimate of supportability. Ensure subordinate units' GI&S representatives are kept advised on pertinent actions and developments.

Downloaded from http://www.everyspec.com

Course of Action Development - Continued	
MAGTF Staff Actions	**Course of Action Analysis**
Conduct COA analysis wargaming. Refine staff estimates and estimates of supportability. Develop concepts based on warfighting functions. Prepare COA analysis brief.	Complete GI&S estimates of supportability. Help the G-2/S-2 and ISC complete the intelligence estimate and the friendly intelligence estimate of supportability. Continue to monitor and update GEOINT collections, production, and dissemination operations. Ensure subordinate units receive necessary GEOINT products; verify understanding; identify and update subordinates current and new GEOINT intelligence requirements (IR). Validate, update, and prioritize GI&S and GEOINT IRs. Ensure subordinate units' GI&S representatives are kept advised of pertinent actions and developments.

Course of Action Comparison and Decision	
MAGTF Staff Actions	**GI&S Actions**
Evaluate of each COA. Compare COAs. Decide on COA (commander's action). Issue warning order.	Help the IOC and the MAGTF CE intelligence section evaluate and compare each COA. Continue development of Annex M and Appendix 15 to Annex B consistent with the selected COA. Validate, update, and prioritize GI&S IRs and GEOINT collection, production, and dissemination requirements for the selected COA; issue appropriate orders to GEOINT elements. Coordinate GEOINT element task-organization and C2 based on the selected COA. Continue coordination with the G-6/S-6 regarding GI&S CIS requirements; coordinate with G-1/ S-1 for couriering of GEOINT products to subordinate units. Continue coordination with the G-4/S-4 regarding GI&S supply and transportation requirements. Review actions for satisfying GI&S personnel and equipment deficiencies associated with the selected COA. Ensure subordinate units receive pertinent GEOINT products; verify understanding; identify and update subordinates current GEOINT IRs. Validate and prioritize MAGTF GI&S and GEOINT IRs. Ensure subordinate units' GI&S representatives are kept advised of pertinent actions and developments.

Downloaded from http://www.everyspec.com

Orders Development	
MAGTF Staff Actions	**GI&S Actions**
Refine commander's intent. Convert concept of operations into an operations order or a fragmentary order. Update and convert staff estimates and other planning documents into operations order (OPORD) annexes and appendices. Approve OPORD (commander's action).	Complete development of Annex M and Appendix 15 to Annex B; provide copies to subordinate units and ensure they understand the order. Update, validate, and prioritize GI&S IRs and associated collection operations. Monitor ongoing GEOINT production operations; update and issue orders to GEOINT elements. Ensure pertinent GEOINT products are disseminated to all subordinate units. Complete actions associated with map depots, WRS, personnel and equipment augmentation, datum interoperability issues, multinational dissemination, etc. Complete GI&S-related CIS, transportation, and supply actions. Maintain coordination with external GI&S elements.
Transition	
MAGTF Staff Actions	**GI&S Actions**
Give transition brief. Conduct drills. Plan required refinements.	Assist MAGTF CE intelligence section and the IOC with the transition brief. Modify GI&S plans. Monitor ongoing GEOINT collection and production operations; update and issue orders to GEOINT elements. Ensure subordinate units' GI&S representatives and GI&S officers in JTF and other components understand plans and standing requirements; and ensure they receive necessary GEOINT products. Participate in drills. Remain engaged in MAGTF future plans activities.

Downloaded from http://www.everyspec.com

Appendix G

Geospatial Information and Services Annex to Operation Plans and Orders

The following sample format provides notional information and guidance for the development of Annex M to an operation plan (OPLAN) or an operation order (OPORD). The annex format will be used by all Marine Corps operating forces to ensure commonality and interoperability during deliberate and crisis action planning.

CLASSIFICATION

Copy no. ___ of ___ copies
OFFICIAL DESIGNATION OF COMMAND
PLACE OF ISSUE
Date/time group
Message reference number

ANNEX M TO OPERATION ORDER XXX (U)
GEOSPATIAL INFORMATION AND SERVICES (U)

(U) REFERENCES:

(a) (List unit SOPs for intelligence and counterintelligence.)

(b) (List joint task force, naval task force, other components, theater and national intelligence and counterintelligence plans, orders and tactics, techniques, and procedures, as well as multinational agreements pertinent to MAGTF intelligence operations.)

(c) (List those NIMA maps, charts, and related products, and other forms of GI&S data references required for an understanding of this Annex.)

(d) (List other relevant documents that provide guidance required for the necessary planning functions relevant to GI&S and supporting operations.)

(e) Appendix 15 (Geographic Intelligence Operations) to Annex B (Intelligence).

1. (U) Situation

a. (U) Geospatial Information and Services (GI&S) Requirements. (*List the types of hard-copy and digital GI&S products required to support this OPORD.*)

Page number

CLASSIFICATION

Downloaded from http://www.everyspec.com

CLASSIFICATION

(1) (U) Aerospace Products

No.	Nomenclature	Abbreviation	Scale
a.	Global navigation chart	GNC	1:5,000,000
b.	Jet navigation chart	JNC	1:2,000,000
c.	Operational navigation chart	ONC	1:1,000,000
d.	Tactical pilotage chart	TPC	1:500,000
e.	Joint operations graphic - Air	JOG-A	1:250,000
f.	Flight information publications	FLIP	Documents
g.	Escape and evasion charts	EVC	Various

(2) (U) Hydrographic Products

No.	Nomenclature	Abbreviation	Scale
a.	General nautical charts	NC	Various small
b.	Coastal nautical charts	CC	Various medium
c.	Harbor and approach charts	HAC	Various large
d.	Sailing directions	SD	Publications
e.	Combat charts	Cmbt	1:50,000
f.	Tide tables	TT	Publications
g.	Miscellaneous	____	Publications

Downloaded from http://www.everyspec.com

CLASSIFICATION

(3) (U) Topographic Products

No.	Nomenclature	Abbreviation	Scale
a.	Topographic line map	TLM1	1:100,000
b.	Topographic line map	TLM5	1:50,000
c.	City graphics	CG	Various
d.	Tactical terrain analysis data base	TTADB	1:50,000
e.	Road map	RD	Various
f.	LANDSAT image map (interim)	LIM	Various
g.	Water resource overlay	WRO	1:50,000

(4) (U) Target Material Products

No.	Nomenclature	Abbreviation	Scale
a.	Joint operations graphic—radar	JOG-R	1:250,000
b.	Gridded airfield photo	GAP	Various
c.	Gridded installation photos	GIP	Various

(5) (U) Digital Data

No.	Nomenclature	Abbreviation	Scale
a.	Vector interim terrain data	VITD	1:50,000 density
b.	Digital point positioning data base	DPPDB	Digital imagery (classified)
c.	Vector map—level 2	VMap2	1:250,000 density
d.	Vector map—level 3	VMap3	1:50,000 density
e.	Digital topographic data	DTOP	1:50,000 density
f.	Littoral warfare data	LWD	1:5,000 density
g.	Digital nautical chart	DNC	Various densities

Downloaded from http://www.everyspec.com

CLASSIFICATION

b. (U) Enemy GI&S Capabilities. (*Refer to Annex B [Intelligence] of this OPORD for the basic enemy situation. List enemy GI&S capabilities and limitations, to include distribution points, production capabilities, accuracy of products, data collection capabilities, and deception capabilities.*)

(1) (U) Enemy Distribution Capabilities and Points

(2) (U) Enemy GI&S Production Capability

(3) (U) Accuracy of Enemy GI&S Products

(4) (U) Enemy Data Collection Capabilities

(a) (U) Satellite Collection

(b) (U) Aerial Photography Collection

(5) (U) Enemy Deception Capabilities

c. (U) Friendly Support. Refer to Annex C (Operations) of this OPORD. (*List the GI&S forces or agencies that are not assigned or attached to the unit but that will be required to provide GI&S support for the implementation of this order. Specify the type of command relationship desired for each agency or command and the type and duration of support required.*)

(1) (U) National Imagery and Mapping Agency (NIMA)

(2) (U) Marine Corps Intelligence Activity (MCIA)

(3) (U) Combatant Command's Joint Intelligence Center/Joint Analysis Center

d. (U) Assumptions. (*List any assumptions on which this annex is based. State expected conditions pertinent to GI&S support over which the commander has no control. Describe planning and early deployment assumptions concerning the availability of basic loads and NIMA's ability to meet crisis demand.*)

(1) (U) GI&S requirements represent available classified and unclassified aeronautical, hydrographic, topographic, and air target materials. (*These include, but are not limited to digital data, standard maps and charts, and other data both graphic and textual formats. Requirements*

Downloaded from http://www.everyspec.com

CLASSIFICATION

must be specified as hard copy or digital. Digital requirements should identify formats required if different than NIMA standard formats.)

(2) (U) The combatant command's GI&S officer will coordinate all requirements for out-of-theater support, including generation of precise points for targeting support. Within the MAGTF, this task will be handled by the intelligence support coordinator (ISC), assisted by the MEF G-2 future plans officer and the mapping and imagery officer (MIO).

(3) (U) The combatant command's GI&S officer will appoint the theater data base manager and will publish requirements for reports generation, information requests, and tasking authority. The ISC will do the same for the MAGTF.

(4) (U) Component commanders and planning staffs will have required operational quantities of maps, charts, and digital data to conduct operational-level planning. MAGTF commanders and staffs will have required quantities of operational and tactical maps, charts, and digital products.

(5) (U) Rapidly generated maps, charts, and digital data at the tactical scales will be available within 72 hours for a 90 by 90-kilometer area and within 12 days for a 300 by 300-kilometer area.

(6) (U) Sufficient warning prior to execution will allow NIMA to meet increased requirements through crisis support systems.

e. (U) Available GI&S Products. (*Provide a general statement regarding the availability and adequacy of the listed GI&S data, products, and related material required to support the OPORD and refer to the GI&S WRS Plan for detailed accounting in regard to GI&S product availability and adequacy. Refer to Appendix 1 [Requirements List] of this Annex.*) Complete coverage consisting of topographic, hydrographic, and aeronautical products exists to support this OPORD. In some areas 1:100,000 scale imagery may be used to support operations.

Downloaded from http://www.everyspec.com

CLASSIFICATION

Mission	Products Available	Product Types	Product Datum	Coverage Adequate	Currency Date
Command and control	Yes	ONC, JOG-A, TLM, City graphic (CG)	WGS-84	Yes	JUN 89 FEB 92 JAN 94 AUG 73
Intelligence	Yes	ONC, JOG-A, TLM, CG	WGS-84	Yes	JUN 89 FEB 92 JAN 94 AUG 73
C2 of aircraft	Yes	ONC, JOG-A, TLM, CG	WGS-84	Yes	JUN 89 FEB 92 JAN 94 AUG 73
Antiair warfare	Yes	ONC, JOG-A, TLM, CG	WGS-84	Yes	JUN 89 FEB 92 JAN 94 AUG 73
Direct fire & maneuver	Yes	ONC, JOG-A, TLM, CG	WGS-84	Yes	JUN 89 FEB 92 JAN 94 AUG 73
Fire support	Yes	ONC, JOG-A, TLM, CG	WGS-84	Yes	JUN 89 FEB 92 JAN 94 AUG 73
Amphibious landing	No	Combat chart	TOKYO	No	MAY 58
Close air support	Yes	ONC, JOG-A, TLM, CG	WGS-84	Yes	JUN 89 FEB 92 JAN 94 AUG 73
Supply and maintenance	Yes	ONC, JOG-A, TLM, CG	WGS-84	Yes	JUN 89 FEB 92 JAN 94 AUG 73

Page number

CLASSIFICATION

Downloaded from http://www.everyspec.com

CLASSIFICATION

Mission	Products Available	Product Types	Product Datum	Coverage Adequate	Currency Date
Engineering	Yes	ONC, JOG-A, TLM, CG	WGS-84	Yes	JUN 89 FEB 92 JAN 94 AUG 73
Electronic warfare	Yes	ONC, JOG-A, TLM, CG	WGS-84	Yes	JUN 89 FEB 92 JAN 94 AUG 73
Transporta-tion	Yes	ONC, JOG-A, TLM, CG,	WGS-84	Yes	JUN 89 FEB 92 JAN 94 AUG 73
Health services	Yes	ONC, JOG-A, TLM, CG	WGS-84	Yes	JUN 89 FEB 92 JAN 94 AUG 73
Urban operations	Yes	ONC, JOG-A, TLM, CG	WGS-84	Yes	JUN 89 FEB 92 JAN 94 AUG 73

f. (U) Available Services. (*Describe any special geospatial services that will be provided for the operation, e.g., precise point production, data transformations, commercial imagery purchase and orthorectification, surveying. Identify those GI&S units assigned or attached in theater. List information concerning other forces or agencies outside theater that may affect the provision of GI&S products.*)

Downloaded from http://www.everyspec.com

CLASSIFICATION

(1) (U) Geospatial Services. (In-theater)

Type Service	Unit Tasked	Type Support	Tasking Chain
Precise points	NIMA technical representative	Direct	MEF G-2/GI&S
Datum transformation	NIMA technical representative	Direct	MEF G-2/GI&S
Hard-copy replication	Topographic platoon	Direct	MEF G-2/GI&S
Terrain studies	Topographic platoon	Direct	MEF G-2/GI&S
Surveying	320th engineer co. (USA)	Direct	MEF G-2/GI&S

(2) (U) Special Geospatial Services. (Outside theater)

Type Service	Unit Tasked	Type Support	Tasking Chain
Precise Points	NIMA CST	General	MARFOR G-2
Datum Transformation	NIMA CST	General	MARFOR G-2
Commercial Imagery	MCIA GID	General	MARFOR G-2
Orthorectification	MCIA GID	General	MARFOR G-2
Printing	NIMA	General	MARFOR G-2

g. (U) Capabilities

(1) (U) (*List those GI&S forces organic, assigned, or attached to the unit. Show latest arrival date at point of departure for each GI&S unit contained in the TPFDD, and list information concerning other forces or agencies that may affect the provisions of GI&S products required to support the OPORD.*)

Downloaded from http://www.everyspec.com

CLASSIFICATION

GI&S Forces	Point of Departure	Latest Arrival Date	Assigned or Attached Unit
MEF GI&S (MEF CE lead echelon)	Norton AFB, CA	30 Mar XX	MEF Staff G-2
MEF GI&S (complete)	Norton AFB, CA	15 Apr XX	MEF Staff G-2
Topo Plt (MEF CE lead echelon)	Norton AFB, CA	30 Mar XX	MEF Staff G-2
Topo Plt (2nd cluster)	Norton AFB, CA	9 Apr XX	MEF Staff G-2
Topo Plt (3d cluster)	Norton AFB, CA	15 Apr XX	MEF Staff G-2
Topo Plt (complete)	Norton AFB, CA	30 Apr XX	MEF Staff G-2
GIST (GCE)	Norton AFB, CA	5 Apr XX	Div Staff G-2
GIST (ACE)	Norton AFB, CA	10 Apr XX	Wing Staff G-2
GIST (CSSE)	Norton AFB, CA	20 Apr XX	FSSG Staff G-2
GIST (G-3)	Norton AFB, CA	5 Apr XX	MEF Staff G-3 (Future ops)
NIMA Tech Rep	Norton AFB, CA	15 Apr XX	MEF Staff G-2
MCIA Dep. Package	McGuire AFB, VA	30 Mar XX	MARFOR Staff G-2

(2) (U) COMMARFOR will advise and support the JTF commander concerning requirements for GI&S products and support for all Marine Corps forces. Coordination between service and functional components and other supporting organizations will be conducted through the MARFOR G-2 section and/or the MEF G-2/S-2's intelligence operations center (IOC).

(3) (U) COMMARFOR/MEF G-2 or ISC will coordinate with NIMA in conjunction with the JTF to provide the full range of GI&S products to support intelligence and operational requirements.

(4) (U) Coastal hydrographic survey ships and deep ocean bathymetric survey ships are expected to be transferred to the combatant command for use by operating forces under conditions of national emergency. At such time this OPORD is implemented the survey ships will be used in assignments involving hydrographic data collection and chart production as appropriate to the operation or to the overall mission of the command.

Downloaded from http://www.everyspec.com

CLASSIFICATION

2. (U) Mission. (*Provide a clear, concise statement of the GI&S mission in support of the OPORD.*) COMMARFOR and/or MEF will direct, coordinate, validate, and provide GI&S products and services as required in support of this OPORD.

3. (U) Execution

a. (U) Concept of GI&S Operations

(1) (U) General. (*Provide a broad statement of how the command will provide the GI&S support necessary to meet the commander's overall mission requirement. Include the organic topographic and supporting units involved; the time-phasing of operations; the general nature and purpose of GI&S operations to be conducted; the interrelated or cross-Service support; and support provided by agreements, coordination, and cooperation necessary for the successful implementation of this OPORD. Describe the scope and extent of host nation support [HNS] available to enhance MAGTF GI&S operations in support of the OPORD.*)

(a) (U) Forces deploying in support of this OPORD are required to arrive with a 15-day basic load of GI&S products.

(b) (U) Resupply or sustainment stocks and follow-on supplies of maps and charts will be provided via normal supply channels.

(c) (U) Substitute products and quick response products may be provided by NIMA and other Service agencies to supplement available coverage.

(d) (U) Subordinate units with GI&S assets retain primary responsibility for their own quick response products.

(e) (U) Marine expeditionary units (MEUs) are required to deploy with 100 percent of their topographic requirements.

(f) (U) Follow-on requirements will be coordinated with COMMARFOR and/or MEF ISC, with information copies to the JTF and combatant command intelligence section.

Downloaded from http://www.everyspec.com

CLASSIFICATION

(g) (U) Supporting plans will specify the required maps, charts (including series, sheet number, and total quantities), and digital data bases; geographic intelligence and terrain analysis requirements; cartographic and geodetic survey requirements; procedures for requesting standard and/or non-standard topographic production support; and guidance for hard-copy and electronic distribution. Requirements for special products and materials will also be included in supporting plans.

(h) (U) Full-time, GI&S points of contact (POC) will be established at each major subordinate command who are responsible for requirements and capabilities. Provide POC name, SIPRNET, and NIPRINT e-mail addresses and telephone number in writing to MEF command element (G-2/S-2) and the IOC (attn: ISC) as changes occur and/or within 30 days of receipt of this OPORD and its updates.

(2) (U) Deployment. (*Summarize the requirements for deploying organic GI&S forces and necessary depot activities from their normal peacetime locations to the area of operations. Pay particular attention to the time-phasing of these deployments in order to effect an orderly transition from current to planned organizational configurations.*)

(a) (U) Intelligence battalion's topographic platoon will integrate and develop the MAGTF tactical geospatial information library (TGIL) for the MAGTF area of responsibility (AOR) and area of interest.

(b) (U) Subordinate units will ensure communications connectivity for attached geographic intelligence support teams (GIST) and geographic intelligence teams (GIT) to support GEOINT operations.

(c) (U) Subordinate units will maintain and deploy with a 15-day basic load of GI&S stocks.

(d) (U) Automatic distribution change requests and updates for validation will be forwarded to the MEF G-2 (attn: ISC).

(e) (U) (U) All subordinate units will update list of deployment and GI&S basic load requirements and submit these to the MEF G-2 (attn: ISC).

Downloaded from http://www.everyspec.com

CLASSIFICATION

(f) (U) Basic load airlift or sealift transportation from CONUS to the port of entry will be arranged per established time-phased force and deployment list procedures and transportation priorities established by the MEF G-3.

(g) (U) Transportation and movement of WRS or sustainment stocks to subordinate units will be coordinated with the MEF G-4 supply.

(3) (U) Employment. (*Describe in general terms how MAGTF and supporting GI&S forces are to be employed in the conduct of GI&S operations.*)

(a) (U) Intelligence battalion's topographic platoon will maintain the MAGTF GIL within the joint operating area and MAGTF area of operations and area of interest according to ISC direction.

(b) (U) Establishment and operation of a forward map depot to distribute hard-copy and digital media products will be coordinated with MEF G-4 supply.

(4) (U) Interoperability. (*Provide specific technical guidance and procedures to ensure interoperability of GI&S operations and materials, particularly the proper sources, datum documentation, and use of coordinates derived from GI&S products. Provide guidance to ensure that MAGTF sources, methods, and procedures deliver the required accuracy.*)

b. (U) Tasks. (*In separate numbered subparagraphs, list the GI&S tasks assigned to each element of the MAGTF and to those supporting external units or agencies. For each of the tasks, provide a concise mission statement to be performed in further planning or execution of the OPORD. Provide sufficient details in these task assignments to ensure that essential elements to the concept of the operation are described properly.*)

(1) (U) MARFOR G-2 GI&S BRANCH

(a) (U) Act as the point of contact for all Marine component GI&S issues.

(b) (U) Coordinate all validated GI&S collection, production, and dissemination requirements with the JTF, combatant command, and other external organizations.

Downloaded from http://www.everyspec.com

CLASSIFICATION

(c) (U) Coordinate all production requirements tasked by higher headquarters affecting MARFOR topographic assets.

(2) (U) MEF GI&S BRANCH

(a) (U) Identify specific GI&S needs which are not included in Appendix 1 of this Annex.

(b) (U) Identify specific services required from MAGTF topographic units, NIMA, MCIA, or other organizations to support the MAGTF mission.

(c) (U) Identify the distribution of the GI&S basic load to all MAGTF units.

(d) (U) Identify distribution, storage, and management of GI&S depot stocks.

(e) (U) Identify the priorities for GI&S collection, production, and dissemination.

(f) (U) Identify procedures for the transmission of geographic coordinates.

(g) (U) Identify responsibilities for GI&S data base systems administration, management, and replication.

(h) (U) Identify command and control, administration, and maintenance of the GI&S depot.

(i) (U) Identify releaseability of GI&S products and information to host nation, media, and multinational forces.

(j) (U) Maintain an updated, prioritized list of required GI&S products and data bases. Provide this list to COMMARFOR/MEF (G-2/GI&S) within __ days of receipt of this OPORD and its updates.

(k) (U) Identify prioritized GI&S requirements for maps, charts, and digital data bases currently not in production to COMMARFOR/MEF (G-2/GI&S) annually, or within 60 days of receipt of this OPORD and its updates.

Downloaded from http://www.everyspec.com

CLASSIFICATION

(3) (U) INTELLIGENCE BATTALION. Plan and direct, collect, process, produce and disseminate intelligence, and provide counterintelligence support to the MEF, MEF MSCs, subordinate MAGTFs, and other commands as directed.

(a) (U) Intelligence Battalion Commander/Intelligence Support Coordinator

1 (U) Plan and, upon AC/S G-2 approval, implement a concept of intelligence operations based upon the mission, threat, commander's intent, guidance, and concept of operations. This concept of intelligence operations will include a supporting GEOINT concept of operations.

2 (U) Establish and supervise operation of the MEF IOC, which includes the support cell, the surveillance and reconnaissance cell, and the production and analysis cell. Task-organize and integrate GI&S elements within the IOC and other elements of the MEF CE's combat intelligence center as appropriate. Collocate the IOC with the MEF CE's main command post.

3 (U) Develop, consolidate, validate, and prioritize recommended PIRs and IRs to support MAGTF planning and operations for AC/S G-2 approval.

4 (U) Plan, develop, integrate, and coordinate MEF intelligence collection, production, and dissemination plans, to include the effective organic and external integration and employment of MAGTF GI&S and GEOINT as well as MEF imagery intelligence, signals intelligence, counterintelligence, human resources intelligence, ground remote sensors, ground reconnaissance, and tactical air reconnaissance operations.

5 (U) Plan, develop, and coordinate intelligence communications and information systems architecture, to include its integration with and support of MEF GI&S and GEOINT requirements.

6 (U) Coordinate and integrate MEF GI&S and GEOINT operations with the MARFOR HQ, other service components, JTF, theater, and national intelligence operations, to include all aspects of reach-back support.

Downloaded from http://www.everyspec.com

CLASSIFICATION

7 (U) Monitor the flow of GI&S throughout the MAGTF and ensure that it is delivered to intended recipients in a timely fashion and satisfactorily meets their needs.

8 (U) Evaluate the effectiveness of MEF and supporting GI&S operations and support; initiate and/or recommend to the AC/S G-2 necessary corrective actions and improvements.

(b) (U) Support Cell OIC

1 (U) Develop and coordinate GI&S and supporting GEOINT and all-source intelligence collection plans, coordinating and integrating these with MEF, other components, JTF, theater, and national intelligence production operations.

2 (U) Identify and prepare of GI&S and GEOINT requests for intelligence that are beyond organic capabilities and preparing submissions to higher headquarters and external agencies for support.

3 (U) Plan, coordinate, conduct, and supervise geodetic and topographic survey's as required.

4 (U) Plan, coordinate, conduct, and supervise collection of coastal data regarding trafficability, routes of egress, inland water bodies, and similar information as required to support MAGTF operations.

5 (U) Develop, coordinate, and maintain GI&S and GEOINT dissemination priorities, intelligence reporting criteria, and dissemination means.

6 (U) Develop and coordinate GI&S dissemination operational plans and supporting architectures for voice and data network communications, coordinating and integrating these with MEF, other components, JTF, theater, and national GI&S and intelligence CIS and dissemination operations.

7 (U) Disseminate throughout the MAGTF terrain information and intelligence and other GI&S and GEOINT products to support requirements.

Page number

CLASSIFICATION

Downloaded from http://www.everyspec.com

CLASSIFICATION

(c) (U) Production and Analysis Cell OIC

1 (U) Develop, administer, and maintain the geospatial framework to support MEF planning, intelligence, C2, maneuver, fires, logistics, and other operations and processes.

2 (U) Maintain all-source automated GI&S and intelligence data bases, files, workbooks, country studies, and other intelligence studies to support MAGTF requirements.

3 (U) Analyze, synthesize, and produce terrain information and intelligence, and other GI&S and GEOINT products to support MAGTF requirements.

4 (U) Prepare GI&S, GEOINT, and all-source intelligence products to support MAGTF requirements, to include modified combined obstacle overlays, terrain models (three-dimensional models), line-of-sight studies, range fan studies, terrain factor overlays, hydrographic charts, landing zone studies, and similar cartographic and digital products.

5 (U) Prepare map substitutes such as overlays, overprints, photomask, map revisions, and multicolor charts.

6 (U) Revise and reproduce in limited quantities combat charts, coastal charts, port charts, and harbor charts. Products may include terrain models (three-dimensional models), line-of-sight studies, range fan studies, terrain factor overlays, hydrographic charts, landing zone studies, and similar products.

(4) (U) Major Subordinate Commands

(a) (U) Establish full-time, GI&S POC at each major subordinate command who are responsible for requirements and capabilities. Provide POC name and phone number in writing to MEF G-2/GI&S and the ISC/IOC as changes occur and/or within __ days of receipt of this OPORD and its updates.

c. (U) Coordinating Instructions. (*Reference Appendix 15 [GEOINT Estimate] to Annex B [Intelligence]. List in separate numbered subparagraphs the instructions applicable to two or more elements of the MAGTF and supporting units/agencies that are necessary for proper coordination of the GI&S support. Specify the points of contact within the command that can*

Downloaded from http://www.everyspec.com

CLASSIFICATION

authorize the release of WRS held or that can resolve command GI&S problems. Also, include a brief description of how notification of forces and agencies will be accomplished and time sequencing of notifications.)

(a) (U) The U.S. Military Grid Reference System (MGRS) will be used for operations involving or in support of ground forces. Ensure the map, chart, or digital data base datum information is included when passing coordinates.

(b) (U) The MGRS prescribed for use by ground forces in the area will become the standard when aviation forces are providing close air support.

(c) (U) The geographic coordinates may be used in operations which do not directly involve ground forces.

(d) (U) The World Geodetic System 1984 (WGS84) is the datum of preference for all U.S. operations. The combatant or JTF commander will designate another datum only when necessary to support multinational operations.

4. (U) Administration and Logistics

a. (U) Supply and Storage. (*Provide instructions regarding GI&S supply and storage procedures and responsibilities. Include the planned locations of command and noncommand storage sites and facilities. Refer to the command GI&S WRS Plan to define detailed packaging and activation instructions at storage facilities. Specify the types and quantities of products or timeframe (e.g., 15 days of maps and charts) required to be held by the supporting command's units or agencies. Outline the intra-theater distribution plan to be implemented by unit logistic organizations.*)

(1) (U) Maps and charts for bulk distribution to MEF units are stored at (*identify location*).

(2) (U) CG MEF will requisition planning stock and the 15-day basic load (unit- held WRS) directly from NIMA.

(3) (U) The ISC will coordinate with the MEF G-4 to establish quantity requirements and storage location for bulk resupply.

Downloaded from http://www.everyspec.com

CLASSIFICATION

b. (U) Transportation. (*Provide general instructions regarding GI&S material transportation requirements. Use a separate appendix to list detailed transportation requirements and procedures.*)

(1) (U) The ISC will coordinate with the MEF G-4 to establish transportation requirements for bulk and individual unit resupply.

(2) (U) Detailed transportation information is included in Appendix 2.

c. (U) Support. (*Provide instructions and procedures for obtaining logistics in support of GI&S missions. Identify priorities, times required, and other necessary information.*)

(1) (U) Requests for bulk-map stock replenishment will be forwarded via normal supply channels to MEF G-2/ ISC for validation of quantities.

(2) (U) Request for theater resupply will be forwarded via normal supply channels to MEF G-2/ISC for validation and submission.

(3) (U) Requests for GI&S products and services (other than requisitions of stocked products) which exceed the the MEF's capabilities will be submitted to the ISC for validation, prioritization, and submission to COMMARFOR (or JTF) for follow-on action.

5. (U) Command and Control

a. (U) Priorities. (*Provide guidance for establishing command GI&S support priorities.*)

b. (U) Command Relationships. (*Include primary and alternate locations of organic GI&S units and specify the C2 relationships among the MAGTF GI&S support structure and external GI&S units or agencies if not previously addressed. Refer to Annex B and Annex J (Command Relations) of this OPORD.*) All requests for GI&S support and GEOINT production will be coordinated through the MEF G-2 and the ISC.

c. (U) Communications and Information Systems (CIS). (*Reference Annex K [Communications and Information Systems]. Identify CIS requirements, priorities, and other pertinent information to support unit GI&S operations.*)

Downloaded from http://www.everyspec.com

CLASSIFICATION

d. (U) Reports. (*Specify organizations and elements responsible for GI&S reports. Include the format for preparation and times, methods, and classification of submission. Add necessary instructions for updating maps, charts, and digital data bases. This information can be added here or in Appendix 3 [Geospatial Information and Services Reports] of this Annex.*)

ACKNOWLEDGE RECEIPT

GERALD C. THOMAS
Lieutenant General, USMC
Commanding

APPENDICES:

1 - Geospatial Information and Services Requirements List

2 - Geospatial Information and Services Transportation Requirements

3 - Geospatial Information and Services Reports

Downloaded from http://www.everyspec.com

This page intentionally left blank.

Downloaded from http://www.everyspec.com

CLASSIFICATION

Copy no. ___ of ___ copies
OFFICIAL DESIGNATION OF COMMAND
PLACE OF ISSUE
Date/time group
Message reference number

APPENDIX 1 TO ANNEX M TO OPORD XXX (U)
GEOSPATIAL INFORMATION AND SERVICES REQUIREMENTS LIST (U)

1. (U) Requirements List. (Identify the known-to-date GI&S products required for the execution of this order. Include the scale, national stock number, quantity on hand, and status.) The lists of series and sheet numbers encompass the total number of requirements submitted by the Marine expeditionary force and validated by COMMARFORPAC, the JTF and combatant commanders.

a. (U) Command Element Requirements

Product Scale	National Stock Number	Quantity On Hand	Status

b. (U) Ground Combat Element Requirements

Product Scale	National Stock Number	Quantity On Hand	Status

Page number

CLASSIFICATION

Downloaded from http://www.everyspec.com

CLASSIFICATION

c. (U) Air Combat Element Requirements

Product Scale	National Stock Number	Quantity On Hand	Status

d. (U) Combat Service Support Element Requirements

Product Scale	National Stock Number	Quantity On Hand	Status

Downloaded from http://www.everyspec.com

CLASSIFICATION

Copy no. ___ of ___ copies
OFFICIAL DESIGNATION OF COMMAND
PLACE OF ISSUE
Date/time group
Message reference number

APPENDIX 2 TO ANNEX M TO OPORD XXX (U)

GEOSPATIAL INFORMATION AND SERVICES TRANSPORTATION REQUIREMENTS (U)

1. (U) General. (Provide general transportation requirements that pertain to deploying forces. This may include a listing of transportation shortfalls [e.g., reduced stock requirements] in required support of GI&S operations if full transportation requirements cannot be provided.)

a. (U) Defense Logistics Agency provides transportation of GI&S products and data from NIMA depots to the points of embarkation, or other CONUS locations designated by Service component commanders.

b. (U) Units will deploy with a 30-day (or as directed) basic load of GI&S and GEOINT products.

c. (U) GI&S products are a Class IIE supply item. United States Transportation Command provides assets per the TPFDD to push additional GI&S and/or GEOINT products to deployed forces. Shipping priority is the same as Class VIII (medical) unless -prioritized higher by the MEF G-3.

2. (U) Personnel. (*List movement requirements of GI&S personnel in the TPFDD; include in-place GI&S personnel and shortfalls. List any transportation shortfalls in required support of GI&S operations if full transportation requirements cannot be provided.*)

3. (U) Equipment. (*List movement requirements of GI&S equipment in the TPFDD; include in-place GI&S equipment and shortfalls. List any transportation shortfalls in required support of GI&S operations if full transportation requirements cannot be provided.*)

4. (U) Map Stocks. (*List movement requirements for map stocks held and WRS GI&S holdings in the TPFDD. Include future transportation requirements for GI&S sustainment. List any transportation shortfalls in required support of GI&S operations if full transportation requirements cannot be provided.*)

Page number

CLASSIFICATION

Downloaded from http://www.everyspec.com

This page intentionally left blank.

Downloaded from http://www.everyspec.com

CLASSIFICATION

Copy no. ___ of ___ copies
OFFICIAL DESIGNATION OF COMMAND
PLACE OF ISSUE
Date/time group
Message reference number

APPENDIX 3 TO ANNEX M TO OPORD XXX (U)
GEOSPATIAL INFORMATION AND SERVICES REPORTS (U)

(*Provide a detailed description and format for each report. Identify transmission methods and point of contact to receive each report.*)

1. (U) Safety of Navigation Reports

2. (U) Marine Information Reports

3. (U) Port Information Reports

4. (U) Product Discrepancy Reports

5. (U) Beach Reports

6. (U) Low Stockage Reports

7. (U) Request for GI&S and/or GEOINT Support

Page number

CLASSIFICATION

Downloaded from http://www.everyspec.com

Appendix H

Tactical Study of the Terrain

Analysis of the area of operations is a comprehensive study to determine the effects of the terrain on enemy and friendly operations. It includes an analysis of weather, terrain, and other factors (e.g., economy, sociology, religion) throughout the commander's area of interest and serves as a basis for developing specific friendly courses of action and for determining enemy capabilities and in commander and staff estimates. The analysis allows the commander and staff to see and assess the battlespace in width, depth, height (airspace), and time dimensions.

The intelligence officer has staff responsibility for initiating, coordinating, and ensuring completion and dissemination of the analysis of the area of operations. A key product resulting from this is Tab A, "Tactical Study of the Terrain," to Appendix 11 (Intelligence Estimate) to Annex B (Intelligence) of an OPLAN. Other staff section contribute within their respective fields so the final analysis represents a coordinated effort. Typical contributions include—

- The topographic platoon's terrain and infrastructure studies.
- The production and analysis cell all-source intelligence estimates (to include on sociological, political, economic, technological, and related conditions). The staff weather officer's operational weather forecasts and other weather and climatic information, to include meteorological effects decisions aids. For additional information, see Annex H (Meteorology and Oceanography Services) to the OPLAN or OPORD.
- The engineer's analysis of route reconnaissance information and other information on rear area activities.
- The psychological operations officer's information on the psychological environment.

Graphic representations of weather and terrain data developed during the IPB process are included as part of this tab. An abbreviated analysis will usually be included as part of the intelligence estimate. The latter is more common at lower levels of command when a previously prepared analysis is updated in conjunction with an ongoing operation or time does not permit preparation of a detailed study.

In preparing the analysis of the area of operations, the intelligence officer uses other sources of information and intelligence including national intelligence surveys and locally-produced studies and periodicals. When possible, the intelligence officer prepares a tactical study of the terrain and an analysis of the area of operations based on an anticipated mission before the actual mission has been received. On receipt of the mission, the intelligence officer reevaluates the analysis in terms of the area of interest and area of operations and the commander's initial mission analysis, initial planning guidance, and intelligence requirements. As the operation progresses, changes in these factors will require revision of the terrain analysis.

Downloaded from http://www.everyspec.com

This page intentionally left blank.

Downloaded from http://www.everyspec.com

The following sample format of Tab A (Tactical Study of the Terrain) to Appendix 11 (Intelligence Estimate) to Annex B (Intelligence) to an operation order provides instructions and notional information to support the development of this analysis.

CLASSIFICATION

Copy no. ___ of ___ copies
ISSUING UNIT
PLACE OF ISSUE
Date/time group
Message reference number

TAB A TO APPENDIX 11 TO ANNEX B TO OPERATION ORDER XXX
TACTICAL STUDY OF THE TERRAIN (U)

(U) REFERENCES:

(a) (List unit SOPs for intelligence and counterintelligence.)
(b) (List maps, documents, and other forms of GI&S and GEOINT data or sources that provide guidance relevant to the construction of this tab.)
(c) (List those NIMA products and data bases and other forms of GI&S data references required for an understanding of this tab.)
(d) (List other documents that provide guidance required for the necessary planning functions relevant to GI&S and supporting operations.)

1. (U) Purpose. (State the assigned task and its purpose.) To analyze the terrain within the I MEF's Area of operations (AO) for Operation Yakima.

2. (U) Mission. (The mission of the command is taken from the commander's mission analysis, planning guidance, or other statement.) Defend in sector west of the Columbia River. Be prepared to attack and/or counterattack enemy forces within the MEF AO.

3. (U) General Description of the Area

a. (U) Climatic Weather Conditions. (Provide a general description of the AO's climatic weather conditions for a defined timeframe.)

(1) (U) Timeframe. Weather forecast for period 1-30 April 2000.

(2) (U) Climatic Summary

(a) (U) Precipitation. Precipitation is sparse during the month of April, averaging less than ½ inch. The absolute maximum is only 1

Page number

CLASSIFICATION

Downloaded from http://www.everyspec.com

½ inches. Almost all precipitation falls in the form of rain. Thunderstorms occur on less than one day per month; while snow, if it occurs at all, is only a trace.

(b) (U) Temperature. During the month of April, temperatures are usually moderate. The mean monthly maximum is 64 °F with the mean monthly minimum being 34 °F. Temperatures can be expected to dip below freezing 13 days of the month.

(c) (U) Wind. During the month of April, prevailing winds are westerly throughout the area of operations. Wind speeds of 5-12 mph are normal, occurring an average of 16 days throughout the month. Wind speeds of greater than 20 mph can be expected on 6 days during the month.

(d) (U) Ceiling and Visibility. If present, clouds are generally high, thin cirrus. Visibility is generally greater than 5 miles. During the month of April, visibility is greater than 3 miles with ceilings greater than 1,000 feet on an average of 24 days. Visibility of less than ½ mile occurs on an average of only 1 ½ days during April and is usually associated with blowing dust or an isolate thunderstorm. Lowest visibility usually occurs between the hours of midnight and 0900.

(e) (U) Illumination. (Use local standard time to list beginning of morning nautical time [BMNT], end of evening nautical time [EENT], sunrise [SR], sunset [SS], moonrise [MR], and moon set [MS].)

	BMNT	EENT	SR	SS	MR	MS
1 April	0435	1938	0542	1831	2130	1000
11 April	0413	1954	0522	1844	0243	1722
21 April	0352	2010	0504	1858	1115	2145
1 May	0332	2027	0447	1911	1750	0315

(f) (U) Moon Phases: New moon 4 April
1st quarter 11 April
Full moon 19 April
Last quarter 27 April

Downloaded from http://www.everyspec.com

CLASSIFICATION

(3) (U) Atmospheric Pressure. Average pressure is _____.

b. (U) Terrain. (Provide a general description of the terrain within the area of operations.)

(1) (U) Relief and Drainage Systems. The area of operations is drained by two major, north to south flowing rivers, the Yakima River to the west and the Columbia River to the east. Drainage within the MEF's AO consists primarily of east-west flowing streams and canals. Most drainage systems within the area of operations have high, steep banks with slopes greater than 30 percent. The area is dominated by numerous parallel ridges running principally from the northwest to the southeast. This area is heavily eroded and dissected by steep valleys, canyons, and wadies.

(2) (U) Vegetation. Natural vegetation within the area of operations consists of arid and semiarid rangeland. Grasses and shrubs are the primary vegetative cover with some scattered trees found along stream bottoms. Cultivated vegetation in the area consists primarily of food crops such as short grain and vegetables in the northwestern corner of the MEF's AO, and orchards, vineyards, and short grain crops in the southwestern corner of the MEF's AO.

(3) (U) Surface Materials. Surface materials within the low and high plains consist primarily of alkaline silty loam with small scattered deposits of sandy loam along larger streams. Surface materials within hills, mountains, and ridges consist of shallow, stony soils mixed with silt. Soils are less than 1 meter thick with multiple layers of basalt in the bedrock.

(4) (U) Manmade Features. The two principle east-west roads through the area are Interstate 90 (a four-lane divided highway) in the north and Highway 24 (a two-lane paved road) in the south. Two principal north-south roads are located within the MEF's rear. They are Interstate 82 (a four-lane divided highway) and Highway 821 along the east bank of the Yakima River. Two single-track, standard-gauge railroads are located within the area of operations. One runs east-west in the north and one runs north-south in the MEF's rear. The major built-up areas are YAKIMA, population of 45,588 (FG9164) and ELLENSBURG, pop. unknown (FH8607). There are two major airfields; one located 2 kilometers west of YAKIMA and the other located 3 kilometers north of ELLENSBURG. Numerous smaller paved and unpaved airstrips and landing strips are located within the area of operations.

Downloaded from http://www.everyspec.com

CLASSIFICATION

4. (U) Military Aspects of the Area. (Provide a general description of terrain effects on military operations within the area of operations. Focus on the MAGTF mission and address KOCOA.)

a. (U) Key Terrain

(1) (U) RYEGRASS MOUNTAIN (Vicinity GH272014). This terrain feature is located in the center of mobility corridor 1a and controls movement along the major east-west road in the MEF's AO.

(2) (U) SADDLE MOUNTAIN (Vicinity GG261930). This terrain feature controls movement along mobility corridor 1b and the east-west railroad lying therein.

(3) (U) HILL 530 (Vicinity GG258825). This hill controls movement along mobility corridor 3.

(4) (U) HILL 811 (Vicinity GG197856). This hill is located between mobility corridors 2 and 3 and provides excellent observation and fields of fire.

(5) (U) HILL 952 (Vicinity GG253682) and 949 (Vicinity GG251659). These hills are located in mobility corridor 4 and control the east-west movement along the secondary road network.

(6) (U) HILL 739 (Vicinity GG230573). This hill mass controls movement on mobility corridor 5 and Highway 24.

(7) (U) VANDERBILT GAP (Vicinity FG962950). Controls movement along Interstate 82 in the MEF's rear area.

(8) (U) Interstate 82 Bridges

(a) (U) Over Squaw Creek (Vicinity GH015683).

(b) (U) Over Selah Creek (Vicinity FG956747).

(9) (U) Bridges Over Yakima River (Railroad). Vicinity FH907971, FG936801, FG920730, and FG923653.

Downloaded from http://www.everyspec.com

CLASSIFICATION

(10) (U) Bridges Over Yakima River (Vehicle). Vicinity FG919724, FG934643, FG940559, and FG955532. NOTE: Interstate 82 and Highway 821 bridges cross Yakima River off existing maps at approximately FG900675.

b. (U) Observation and Fields of Fire

(1) (U) Weather Conditions. Limited restrictions to visibility are most likely to occur between the hours of midnight and 0900 due to blowing dust and haze. Prevailing winds favor friendly use of smoke and chemicals.

(2) (U) Relief. Good to excellent observation, as well as excellent long-range fields of fire, exist from the dominant ridges and hills. High ground along the west bank of the Columbia River provides excellent observation and fields of fire at all possible crossing sites. Observation and fields of fire within mobility corridors will be fair to good with numerous features providing the majority of the cover and concealment.

(3) (U) Vegetation. Isolated orchards and vineyards east of Yakima. Other vegetation will not significantly limit observation and fields of fire.

(4) (U) Manmade Features. Manmade features will not be a limiting factor except in the built-up areas of YAKIMA and ELLENSBURG.

c. (U) Cover and Concealment

(1) (U) Relief. The rolling, dissected terrain within the area of operations will provide good to fair cover from direct fire weapons and good to fair concealment from ground observation. Cover from indirect fires and concealment from aerial observation will be poor throughout the entire sector.

(2) (U) Vegetation. No cover or concealment will be provided within the area of operations due to the lack of significant vegetation.

(3) (U) Manmade Features. With the exception of the built-up areas around YAKIMA, there are no significant manmade features which will afford cover or concealment.

Downloaded from http://www.everyspec.com

CLASSIFICATION

d. (U) Obstacles

(1) (U) Relief. Terrain favors the defense because of the numerous micro-relief features such as gullies, canyons, and steep stream banks. Most micro-relief features will not stop vehicle off-road movement, but these features will significantly slow or impede vehicle advance. Very little engineer effort will be required to make these linear obstacles impassable. Both the Columbia and Yakima Rivers are major natural obstacles and are not fordable. Major engineer effort will be required to cross at sites where bridges do not exist.

(2) (U) Vegetation. Vegetation is not a significant limiting factor except in the vicinity of YAKIMA, where vineyards and orchards will restrict the movement of wheeled vehicles.

(3) (U) Surface Materials. The surface materials within the area of operations are extremely stable in the existing arid climate. Within the valleys, shallow excavation is possible with the use of hand tools. Soils may permit easy ditching and expansion of existing natural obstacles. Soils on the ridgelines are more shallow and course and can be used as minefields.

(4) (U) Manmade Features. Numerous cuts and fills are located on the major roads and railroads within the area. Most of the bridges across the Yakima River are located in the vicinity of the built-up area which will force most traffic into, or near the city of Yakima. Movement through Yakima will be restricted to the existing road network.

e. (U) Avenues of Approach. (Provide a general description of terrain effects on available avenues of approach and mobility corridors within the area of operations.) There are five avenues of approach from the Columbia River into and through the MEF's sector.

(1) (U) Corridors Available to Enemy for Movement into Our Position

(a) (U) Axis GH280027 to GH910047 (Interstate 90).

(b) (U) Axis GG280840 to GG960990.

(c) (U) Axis GG280820 to GG000790.

Downloaded from http://www.everyspec.com

CLASSIFICATION

(d) (U) Axis GG290660 to FG940700.

(e) (U) Axis GG290550 to FG950610.

(2) (U) Corridors Available to Us for Movement into the Enemy's Position.

(a) (U) Axis GG080030 to GG100963 (BOYLSTON MOUNTAIN) to GG084916 (BADGER GAP) to GG040670 (YAKIMA RIDGE) .

(b) (U) Axis FG910990 to FG920700 (Interstate 82).

f. (U) Combat Service Support Aspects. (The following subparagraphs would be completed under the intelligence officer's direction as a coordinated effort between the GEOINT analyst, intelligence analysts, weather analysts, and other combat, combat support, and combat service support staff members.)

(1) (U) Personnel.

(2) (U) Logistics.

(3) (U) Civilian-Military Operations.

5. (U) Effects of Area Characteristics.

a. (U) On Enemy Courses of Action

(1) (U) Enemy Defense.

(2) (U) Enemy Attack.

(3) (U) Enemy Air.

(4) (U) Enemy Use of Weapons of Mass Destruction.

b. (U) On Friendly Course of Action

(1) (U) Friendly Defense.

(2) (U) Friendly Attack.

Downloaded from http://www.everyspec.com

CLASSIFICATION

(3) (U) Friendly Air.

(4) (U) Friendly Use of Weapons of Mass Destruction.

/s/ _____

_____

Downloaded from http://www.everyspec.com

Appendix I

Beach Studies

The geographic intelligence specialist within the intelligence section and/or intelligence battalion often has staff responsibility for initiating, coordinating, and ensuring completion and dissemination of analysis for beaches within the area of operations. Other staff sections contribute within their respective fields so the final analysis provides a coordinated fused, intelligence product. Typical contributions include imagery, ground and air reconnaissance reports, sea-air-land teams' reports, and all-source intelligence analysis and data bases.

High resolution graphic views developed during the IPB process are attached to this study. An abbreviated analysis may be prepared as part of the intelligence estimate. The abbreviated analysis is more common at lower levels of command. It is used when a previously prepared analysis is updated in conjunction with an ongoing operation or when time does not permit preparation of a detailed study.

The intelligence battalion's production and analysis (P&A) cell within the intelligence operations center (IOC) uses a variety of sources (e.g., national intelligence surveys, locally-produced studies, periodicals) to prepare the analysis of the area of operations. Analyses prepared by other headquarters are also valuable sources of information and intelligence.

When possible, an analysis of the beaches within the area of operations is prepared before the actual mission has been received. On receipt of the mission, the G-2 I&M officer and the intelligence battalion intelligence support coordinator (ISC) reevaluate the analysis in terms of the commander's area of interest, area of operation, and intelligence requirements. As the operation progresses, changes in the mission and the commander's requirements will require revision of the analysis.

Downloaded from http://www.everyspec.com

This page intentionally left blank.

Downloaded from http://www.everyspec.com

The following sample format of Tab B (Beach Studies) to Appendix 11 (Intelligence Estimate) to Annex B (Intelligence) to an operation order is provided to support the development of this analysis.

CLASSIFICATION

Copy no. ___ of ___ copies
ISSUING UNIT
PLACE OF ISSUE
Date/time group
Message reference number

TAB B (BEACH STUDIES) TO APPENDIX 11 (INTELLIGENCE ESTIMATE) TO ANNEX B (INTELLIGENCE) TO OPERATION ORDER

(U) REFERENCES

(a) List unit SOPs for intelligence and counterintelligence

(b) List those NIMA products and data bases and other forms of GI&S data references required for an understanding of this TAB.

(c) FM 34-130/FMFRP 3-23-2, *Intelligence Preparation of the Battlefield (IPB)* and FM 5-33, *Terrain Analysis* list other relevant documents that provide guidance required for the necessary planning functions relevant to GI&S and supporting operations, to include pertinent maps.

1. (U) BEACH 1. Provide the information indicated in the attached form. Where appropriate, reference should be made to associated graphic views generated to support visualization of specified beaches, landing areas, and landing sites.

2. (U) BEACHES 2 through X, as required.

Page number

CLASSIFICATION

Downloaded from http://www.everyspec.com

CLASSIFICATION

1. COUNTRY	2. CHARTS/MAP REFERENCE
3. LATITUDE AND LONGITUDE WGS-84	4. MILITARY GRID COORDINATES OF CENTER
5. DISTANCE AND DIRECTION FROM PROMINENT LANDMARK	
6. LEFT FLANK (Describe briefly; give compass direction from center, latitude and longitude, and grid coordinates. Reference appropriate geospatial view or annotated photo; if available.)	
7. CENTER (Describe briefly; reference the appropriate geospatial view or annotated ed photo, if available.)	
8. RIGHT FLANK (Describe briefly; give compass direction from center, latitude and longitude, and grid coordinates. Reference the appropriate geospatial view or annotated photo, if available)	

9. TOTAL LENGTH	10. USABLE LENGTH	11. CONFIGURATION

12. UNUSABLE PARTS (Obstruction, Separations, Interruptions)		
LOCATION	DESCRIPTION	EXTENT
a.		
b.		
c.		

13. PENETRATION POINT WIDTHS AND GRADIENTS				
LOCATION	LOW WATER	HIGH WATER	GRADIENTS	REMARKS
LEFT FLANK				
CENTER				
RIGHT FLANK				
OTHER CRITICAL REFERENCE POINTS (Reference appropriate geospatial view or annotated photo, if possible.)				

14. MATERIALS													
LOCATION	LOWER SHORELINE				HIGH WATER ZONE				BACKSHORE				REMARKS
	P	W	T	CBR	P	W	T	CBR	P	W	T	CBR	
LEFT FLANK													
CENTER													
RIGHT FLANK													
OTHER CRITICAL REFERENCE POINTS (Reference appropriate geospatial view or annotated photo, if possible.)													

Downloaded from http://www.everyspec.com

CLASSIFICATION

15. TRAFFICABILITY (Rate trafficability of personnel [P], wheeled vehicle [W], and tracked vehicle [T] as good [G], fair [F] or poor [P]. Give the compression bearing rations [CBR].)					
LOCATION		LOW WATER FORESHORE	HIGH WATER ZONE	BACKSHORE	REMARKS
LEFT FLANK					
CENTER					
RIGHT FLANK					
OTHER CRITICAL REFERENCE POINTS					
16. EXITS					
LOCATION	NATURE	HEIGHT	GRADIENT	SURFACE MATERIAL	USABLE UNTIL
a.					
b.					
c.					
17. PROXIMITY OF BEACH TO DEVELOPED AREAS (Reference appropriate geospatial view or annotated imagery, if available.)					
18. LOCAL USE OF BEACH					
19. DISTANCES TO NEAREST COVER OR CONCEALMENT					
LOCATION		LOW WATER LINE	HIGH WATER LINE	TYPE OF CONCEALMENT	REMARKS
LEFT FLANK					
CENTER					
RIGHT FLANK					
OTHER CRITICAL REFERENCE POINT (Reference appropriate geospatial view or annotated imagery, if available					
20. TERRAIN BEHIND BEACH					
LANDFORM TYPE					
COASTLINE TYPE					
BLUFFS, CLIFFS					
OTHER IRREGULARITIES					
MANMADE TERRAIN (e.g., seawalls, road berms, dikes)					
PRIMARY SOIL TYPE			SECONDARY SOIL TYPE		
OFF-ROAD TRAFFIC (good, fair, poor, very poor)					

Page number

CLASSIFICATION

Downloaded from http://www.everyspec.com

CLASSIFICATION

21. VEGETATION				
LOCATION	TYPE	DENSITY	INHIBIT MOVEMENT	REMARKS
LEFT FLANK				
CENTER				
RIGHT FLANK				

22. APPROACHES							
NEAR SHORE OBSTRUCTIONS (including icing, if applicable)					DEGREE OF OBSTRUCTION (slight, moderate, total)		
NEAR SHORE	DISTANCE FROM HIGH WATER LINE TO REFERRED DEPTHS (in meters)				BOTTOM GRADIENT	BOTTOM MATERIAL	REMARKS
	2	4	6	10			
OTHER CRITICAL REFERENCE POINTS (Reference the appropriate geospatial view or annotated photos, if available.)							

23. SURF CONDITIONS							
DATE/TIME	HEIGHT	TYPE	WIDTH OF SURF ZONE	NUMBER OF LINES OF BREAKERS	CREST TO CREST LENGTH/ PERIOD	DIRECTION OF APPROACH	INCIDENT ANGLE
EXCEPTIONS							

24. TIDES			
TYPE	HIGHEST HIGH WATER	LOWEST LOW WATER	DATUM
MAXIMUM RANGE	AVERAGE RANGE	MINIMUM RANGE	EQUIPMENT USED

25. CURRENTS	
DIRECTION	VELOCITY
AVERAGE WINTER WATER TEMPERATURE	AVERAGE SUMMER WATER TEMPERATURE
ICE PRESENT IN WATER	RIP TIDES OBSERVED

Downloaded from http://www.everyspec.com

CLASSIFICATION

26. ROADS AND ROUTES OF COMMUNICATION					
MILITARY GRID REFERENCE SYSTEM (MGRS)	ROUTE NUMBER	SURFACE MATERIAL	WIDTH OF TRAVELED WAY	CONDITION	REMARKS
a.					
b.					
c.					
d.					
e.					
ORIENTATION SKETCH (Reference the appropriate geospatial view or annotated photo, if available.)					

27. CRITICAL TERRAIN				
LOCATION (MGRS)	VISIBLE INDICATIONS	PHOTOGRAPHIC REFERENCE	REASON CRITICAL	DESCRIPTION
a.				
b.				
c.				
d.				
e.				
f.				
ORIENTATION SKETCH (Reference the appropriate geospatial view or annotated photo, if available.)				

28. GEOSPATIAL VIEW/PHOTOGRAPHIC LOG				
DESIGNATION	TYPE	LOCATION	DESCRIPTION	
a.				
b.				
c.				
d.				
e.				
f.				
g.				

29. GEOSPATIAL VIEW OF BEACHES
(Show principal features and annotated photo locations, if available.)

Page number

CLASSIFICATION

Downloaded from http://www.everyspec.com

Appendix J

Helicopter Landing Zone and Drop Zone Studies

Helicopter landing zone (HLZ) and drop zone (DZ) studies are detailed intelligence studies used to determine the environmental effects of potential HLZ and DZ sites. These studies include critical information and intelligence affecting mobility, exits, vegetation, gradients, obstacles, surface materials, urban proximity, and the military aspect of the terrain to support the mission. The analysis provides the commander and staff with critical geographic intelligence that affects the battlespace in width, depth, height (airspace), and time dimensions to support the decisionmaking process and final site selection by the commander.

The production and analysis (P&A) cell, intelligence battalion, intelligence operations center has principal MEF responsibility for the preparation of HLZ and DZ studies. Generally, the topographic platoon leads the development of these studies, with key support from the imagery intelligence platoon and all-source intelligence analysts. The intelligence battalion commander/intelligence support coordinator has staff responsibility for initiating, coordinating, and ensuring completion and dissemination of HLZ/DZ studies of the area of operations. Other staff sections may contribute within their respective fields so the final analysis represents a coordinated effort. Typical contributions include imagery, air and ground reconnaissance reports, engineer reports, and various intelligence data bases.

High resolution graphic views developed during the IPB process are attached to this study. An abbreviated analysis may be prepared as part of the intelligence estimate. The abbreviated analysis is more common at lower levels of command. It is used when a previously prepared analysis is updated in conjunction with an ongoing operation or when time does not permit preparation of a detailed study.

P&A cell analysts use a variety of sources (e.g., national intelligence imagery, surveys, locally-produced studies, periodicals) to prepare HLZ and DZ studies.

When possible, an analysis of the HLZ and DZs within the area of operations is prepared before the actual mission has been received. On receipt of the mission, the ISC reevaluates the analysis in terms of the commander's AO, AOI, and intelligence requirements (IRs). As the operation progresses, changes in the mission, the commander's intent and guidance, and IRs will require revision of the analysis.

Downloaded from http://www.everyspec.com

This page intentionally left blank.

Downloaded from http://www.everyspec.com

The following sample format of Tab E (Helicopter Landing Zone/Drop Zone Studies) to Appendix 11 (Intelligence Estimate) to Annex B (Intelligence) to an operation order is provided to support the development of this analysis.

CLASSIFICATION

Copy no. ___ of ___ copies
ISSUING UNIT
PLACE OF ISSUE
Date/time group
Message reference number

TAB E (HELICOPTER LANDING ZONE/DROP ZONE STUDIES) TO APPENDIX 11 (INTELLIGENCE ESTIMATE) TO ANNEX B (INTELLIGENCE) TO OPERATION ORDER

(U) REFERENCES

(a) Unit SOP for intelligence and counterintelligence.
(b) (List NIMA products and data bases and other forms of GI&S data references required for an understanding of this TAB.)
(c) (List other relevant documents that provide guidance required for GI&S and supporting operations planning functions.)

1. (U) Helicopter landing zone/drop zone. (Identify the information indicated in the attached form. Where appropriate, reference should be made to associated graphic views generated to support visualization of each HLZ and DZ.)

2. (U) Helicopter landing zone/drop zone 2. (Provide the information indicated in the attached form.)

Page number

CLASSIFICATION

Downloaded from http://www.everyspec.com

CLASSIFICATION

HELICOPTER LANDING ZONE/DROP ZONE				
DESIGNATION:		DATE:		
LONGITUDE AND LATITUDE		MILITARY GRID COORDINATES		CHARTS/MAP REFERENCE
1.		TERRAIN		
DESCRIPTION		USAGE		SUITABILITY
LANDING OBSTRUCTIONS		SHAPE		SIZE
REMARKS		SLOPE		ELEVATION
2.		SURFACE DESCRIPTION		
MATERIALS	TRAFFICABILITY	CONDITION		COMPRESSION BEARING RATIO
EXITS		COVER AND CONCEALMENT		
LANDMARKS		REMARKS		
3.		VEGETATION		
LOCATION (Point of Origin)	TYPE	DENSITY	DIRECTION FROM POINT OF ORIGIN	DISTANCE FROM POINT OF ORIGIN
4.		HLZ/DZ ORIENTATION PHOTOGRAPH/SKETCH		
(Show principal features and, if available, provide annotated photographs.)				

Downloaded from http://www.everyspec.com

Appendix K

GEOINT Production Report Sample Format

The following sample format defines the critical elements of a GEOINT production report. During peacetime and garrison operations, a monthly production report should be compiled by the topographic platoon and forwarded via the intelligence battalion commander to the MEF G-2 imagery and mapping section to ensure GEOINT production time lines and resources are being adequately identified, prioritized, and employed. During tactical operations, the topographic platoon and/or detachment will provide this report to the MAGTF CE intelligence officer via the intelligence battalion commander/intelligence support coordinator.

CLASSIFICATION

GEOINT Production Report

Issuing Command

Date/time group

1. (U) Current production tasks. (Provide a listing of current production tasks. Include completed tasks for one cycle to identify final production status.)

Task Number	Date Received	Priority	Description	Requesting Unit(s)	POC(s)	Due Date

2. (U) Total man hours expended. (Detail total number of man-hours used during this reporting period.)

3. (U) Equipment issues. (Describe equipment issues or malfunctions identified during this reporting period.)

Page number

CLASSIFICATION

Downloaded from http://www.everyspec.com

CLASSIFICATION

4. (U) Personnel issues. (Describe personnel issues identified during this reporting period.)

5. (U) Communications and information systems issues. (Describe issues dealing with communications and information systems, electronic dissemination, or related queries identified during the reporting period.)

6. (U) Anticipated GEOINT production delays. (Describe anticipated production delays for identified tasks; give the reason for each delay (e.g., equipment, personnel, communication, source.)

7. (U) Remarks. (Provide additional remarks or comments.)

/s/ _____

_____

Downloaded from http://www.everyspec.com

Appendix L

Marine Corps Systems Requiring GI&S Support

This appendix displays fielded and emerging command and control, intelligence, maneuver, fires, logistics, and communications and information systems within the operating forces that require GI&S and GEOINT support. These systems are listed in the Marine Corps planning factors data base (PFDB) maintained by the Geospatial Information Management Office, Marine Corps Intelligence Activity. The PFDB will be continuously updated to reflect all systems with GI&S requirements.

System	Acronym
ACTIVE LASER COUNTERMEASURE SYSTEM	ALCS
ADVANCED AMPHIBIOUS ASSAULT VEHICLE	AAAV
ADVANCED COUNTERMINE SYSTEM	ACS
ADVANCED DEMOLITIONS KIT	ADK
ADVANCED FIELD ARTILLERY TACTICAL DATA SYSTEM	AFATDS
ADVANCED LOW ALTITUDE AIR DEFENSE WEAPON	ALAAD
ADVANCED ROCKET SYSTEM	ARS
ADVANCED TOWED CANNON SYSTEM	ATCS
AGILE GROUND LASER EYE PROTECTION SYSTEM	AGLEPS
AIR DEFENSE COMMUNICATIONS PLATFORM	ADCP
AMPHIBIOUS ASSAULT VEHICLE 7A1	AAV7A1
AMPHIBIOUS VEHICLE MINE NEUTRALIZATION SYSTEM	AVMNS
ANTENNA TOWER SYSTEM	ATS
ANTIPERSONNEL OBSTACLE BREACHING SYSTEM	APOBS
ASSAULT COUNTERMINE WARFARE CAPABILITY	ACWC
ASSET TRACKING FOR LOGISTICS AND SUPPLY SYSTEM	ATLASS
AUTOMATED NUCLEAR, BIOLOGICAL, AND CHEMICAL HAZARD INFORMATION AND WARNING SYSTEM	NBC HAZWARN
BATTLEFIELD COMBAT IDENTIFICATION SYSTEM	BCIS
BIOLOGICAL AND CHEMICAL DECONTAMINATES	B&CD
BIOLOGICAL DETECTION AND WARNING SYSTEM	BDWS
CLOSE QUARTER BATTLE WEAPON	CQBW
CLOSED LOOP ARTILLERY SIMULATION SYSTEM	CLASS

Downloaded from http://www.everyspec.com

COASTAL BATTLEFIELD RECONNAISSANCE AND ANALYSIS	COBRA
COMBAT BREACHER VEHICLE	CBV
COMBAT MOBILITY VEHICLE	CMV
COMBAT VEHICLE APPENDED TRAINER	CVAT
COMMERCIAL SATELLITE COMMUNICATION TERMINALS	CSCT
COMMON AVIATION COMMAND AND CONTROL SYSTEM	CAC2S
COMMUNICATIONS AND SPECIAL SIGNALS ANALYSIS CAPABILITY	COSSAC
COUNTERINTELLIGENCE/HUMAN RESOURCES INTELLIGENCE EQUIPMENT PROGRAM	CIHEP
DATA AUTOMATED COMMUNICATIONS TERMINAL	DACT
DEPLOYABLE CAPABILITY FOR INFORMATION DISSEMINATION AND EXCHANGE	DECIDE
DEPLOYABLE FORWARD OBSERVER TRAINING CAPABILITY SIMULATION SYSTEM	DFOTCSS
DIGITAL TECHNICAL CONTROL	DTC
DIGITAL TERRAIN ANALYSIS MAPPING SET	DTAMS
DIGITAL WIDEBAND TRANSMISSION SYSTEM	DWTS
DIRECT AIR SUPPORT CENTER	DASC
DIRECT AIR SUPPORT CENTER—HYBRID MOBILE	DASC-HYBRID
FUTURE LIGHT COMBAT VEHICLE	FLCV
GAP ASSAULT CROSSING SYSTEM	GACS
GLOBAL BROADCAST SERVICE	GBS
GLOBAL COMMAND AND CONTROL SYSTEM	GCCS
GLOBAL POSITIONING SYSTEM—HANDHELD/VEHICLE MOUNTED	GPS-PLGR
GLOBAL POSITIONING SYSTEM—SURVEY	GPS-Survey
GROUND-BASED AIR DEFENSE FIRE UNIT C2 SYSTEM	GBADFUC2
GROUND-BASED AIR DEFENSE INTEGRATED C2 AND EARLY WARNING	GBADIC2&EW
GROUND MARKING SYSTEM	GMS
HYDROGRAPHIC SURVEY CAPABILITY	HYDRO SURVEY
IMPROVED ASSAULT SUPPORT, COMBAT UTILITY CAPABILITY	IAS-CUC
IMPROVED DIRECT AIR SUPPORT CENTRAL	IDASC
IMPROVED MARITIME PREPOSITIONING FORCE CAPABILITY	IMPFC
IMPROVED RIGID RAIDING CRAFT	IRRC
INDOOR SIMULATED MARKSMANSHIP TRAINER	ISMT
INFANTRY SQUAD TRAINER SIMULATOR	ISTS
INITIAL FIRE SUPPORT AUTOMATION SYSTEM	IFSAS

Downloaded from http://www.everyspec.com

INTEGRATED INFANTRY COMBAT SYSTEM	IICS
INTELLIGENCE ANALYSIS SYSTEM	IAS
INTELLIGENCE BROADCAST RECEIVERS	IBR
JOINT BIOLOGICAL POINT DETECTION SYSTEM	JBPDS
JOINT MARITIME COMMAND INFORMATION SYSTEM—UNIFIED BUILD	JMCIS UB
JOINT NUCLEAR, BIOLOGICAL, AND CHEMICAL RECONNAISSANCE SYSTEM—LIGHTWEIGHT	JNBCRS-LWT
JOINT SERVICE IMAGERY PROCESSING SYSTEM	JSIPS
JOINT SURVEILLANCE TARGET ATTACK RADAR	Joint STARS
JOINT TACTICAL INFORMATION DISTRIBUTION SYSTEM	JTIDS
LIGHT ARMORED PERSONNEL CARRIER	LAPC
LIGHT ARMORED VEHICLE	LAV
LIGHT STRIKE VEHICLE	LSV
LIGHTWEIGHT STANDOFF CHEMICAL AERIAL DETECTOR	LSCAD
MAGTF TACTICAL WARFARE SIMULATION SYSTEM	MTWS
MARINE AIRBORNE COMMAND AND CONTROL CONSOLE	MAC2C
MARINE COMBAT SERVICE SUPPORT COMMAND AND CONTROL	MCSSC2
MARINE CORPS AIRBORNE EARLY WARNING SYSTEM	MCAEWS
MARINE CORPS AVIATION COMPUTER-BASED TRAINING INSTRUCTOR SYSTEMS DEVELOPMENT	MCACBTISD
MARINE CORPS CONFLICT SIMULATION SYSTEM	MCCSS
MARINE CORPS MODELING AND SIMULATION CENTERS	MCMSC
MARINE FLEXIBLE FIRE SUPPORT SYSTEM	FIREFLEX
MEDIUM TACTICAL VEHICLE REPLACEMENT	MTVR
METEOROLOGICAL DATA SYSTEM	MDS
METEOROLOGICAL MEASURING SET	MMS
MOBILE ELECTRONIC WARFARE SUPPORT SYSTEM	MEWSS
MODELING AND SIMULATION CONCEPTS ANALYSIS AND DESIGN	M&SCA&D
MODELING AND SIMULATION TOOLS IN SUPPORT OF OPERATIONS	M&STSO
NUCLEAR, BIOLOGICAL, AND CHEMICAL RECONNAISSANCE SYSTEM	NBCRS
POSITION LOCATION REPORTING SYSTEM (PRODUCT IMPROVEMENT PROGRAM)	PLRS (PIP)
PRECISE LIGHTWEIGHT GLOBAL POSITIONING SYSTEM RECEIVER	PLGR
RADIO RECONNAISSANCE EQUIPMENT PROGRAM	RREP
REPLACEMENT AIR-MOBILE DIRECT AIR SUPPORT CENTER	RAMDASC
SECONDARY IMAGERY DISSEMINATION SYSTEM	SIDS

Downloaded from http://www.everyspec.com

SYSTEMS PLANNING, ENGINEERING, AND EVALUATION DEVICE	SPEED
TACTICAL AIR COMMAND CENTER	TACC
TACTICAL AIR OPERATIONS CENTER	TAOC
TACTICAL AIR OPERATIONS MODULE	TAOM
TACTICAL AIRCRAFT MISSION PLANNING SYSTEM	TAMPS
TACTICAL COMBAT OPERATIONS	TCO
TACTICAL ELECTRONIC RECONNAISSANCE PROCESSING AND EVALUATION SYSTEM	TERPES
TACTICAL HIGH ENERGY LASER—AIR DEFENSE	THEL-AD
TACTICAL REMOTE SENSOR SYSTEM	TRSS
TEAM TARGET ENGAGEMENT SIMULATOR	TTES
TECHNICAL CONTROL AND ANALYSIS CENTER (PRODUCT IMPROVEMENT PROGRAM)	TCAC-PIP
THEATER MISSILE DEFENSE	TMD
THREE-DIMENSIONAL LONG RANGE RADAR	TDLRR
TOPOGRAPHIC PRODUCTION CAPABILITY	TPC
TROJAN SPECIAL PURPOSE INTEGRATED REMOTE INTELLIGENCE TERMINAL II	TROJAN SPIRIT II
UNMANNED AERIAL VEHICLE—CLOSE RANGE	UAV-CR
UNMANNED AERIAL VEHICLE—LONG RANGE	UAV-LR
UNMANNED AERIAL VEHICLE—MID RANGE	UAV-MR

Downloaded from http://www.everyspec.com

Appendix M

Geographic Intelligence Unit Annual Training Plan

This appendix provides a recommended training subjects list and annual plans format for the Marine expeditionary force (MEF) command element G-2's imagery and mapping section, and a second tailored list for intelligence battalion's topographic platoon. The MEF-level plan identifies training criteria for other Headquarters staff personnel, as well as a more detailed requirement for headquarters staff and MEF intelligence personnel and covers the planning and use of geospatial information and geographic intelligence. The topographic platoon training program focuses on collection, exploitation, and production of geographic intelligence using standard equipment suites.

Downloaded from http://www.everyspec.com

Sample MEF Command Element Imagery and Mapping Section's Geographic Intelligence Annual Training Plan

Subject	References	Responsible Unit/Section	Participating Unit/Section	Total Hours	Monthly Hours											
					Oct	Nov	Dec	Jan	Feb	Mar	Apr	May	Jun	Jul	Aug	Sep
Datums, grids, and ellipsoids																
Topographic platoon capabilities																
NIMA production capabilities																
Limitations of FD																
MSDS requirements definitions																
Accessing the TGIL																
Terrain support to the IPB process																

FD = foundation data
IPB = intelligence preparation of the battlespace
MSDS = mission specific data set
TGIL = tactical geospatial information library

Downloaded from http://www.everyspec.com

Sample Topographic Platoon, Intelligence Platoon, Annual Training Plan

Subject	References	Responsible Unit/Section	Participating Unit/Section	Total Hours	Monthly Hours											
					Oct	Nov	Dec	Jan	Feb	Mar	Apr	May	Jun	Jul	Aug	Sep
Datums, grids, and ellipsoids																
Topographic platoon capabilities																
Topographic platoon limitations																
NIMA production capabilities																
Limitations of FD																
MSDS requirements definitions																
Accessing the TGIL																
Terrain support to the IPB process																
Developing GEOINT estimates (Appendix 11 to Annex B of an OPLAN/OPORD)																
Developing Annex M to an OPLAN																
Developing terrain factor data bases																
Developing the MCOO																
Developing MSDS																
Intensification of MSDS information																
Developing HLZ/HDZ studies																
Developing transportation studies																
Developing urban studies																
Developing beach studies																

FD = foundation data
HLZ/HDZ = helicopter landing zone and helicopter drop zone
IPB = intelligence preparation of the battlespace
MCOO = modified combined obstacle overlay
MSDS = mission specific data set
TGIL = tactical geospatial information library

Downloaded from http://www.everyspec.com

Appendix N

Glossary

Section I. Acronyms and Abbreviations

AA ..... avenue of approach
AAAV ..... advanced amphibious assault vehicle
ACE ..... aviation combat element
AC/S ..... assistant chief of staff
ADRG ..... ARC digitized raster graphics
AFP ..... all-source fusion platoon
AISI ..... automatic integrated survey instrument
AO ..... area of operations
AOI ..... area of interest
AOR ..... area of responsibility
ARC ..... equal arc second raster chart
ATF ..... amphibious task force
ATFIC ..... amphibious task force intelligence center

BTOPO ..... basic topographic

C2 ..... command and control
C4I ..... command, control, communications, computers, and intelligence
CADRG ..... compressed arc digitized raster graphic
CAP ..... crisis action planning
CAT ..... crisis action team
CCIR ..... commanders's critical information requirements
CCM ..... cross country movement
CD-ROM ..... compact disc read only memory
CE ..... command element
CG ..... city graphic
CHATS ..... CI/HUMINT automated tool set
CI ..... counterintelligence
CIA ..... Central Intelligence Agency
CIB ..... controlled image base
CIC ..... combat intelligence center
CINC ..... commander in chief
CIS ..... communications and information systems
CJCSI ..... Chairman of the Joint Chiefs of Staff instruction
CLO ..... customer liaison office
CMC ..... Commandant of the Marine Corps
CMD ..... collections management and dissemination

Downloaded from http://www.everyspec.com

CMDO ..... collections management and dissemination officer
COA ..... course of action
COC ..... current operations center
COE ..... concept of employment; common operating environment
CONPLAN ..... contingency plan
CONUS ..... continental United States
COP ..... common operational picture
COTM ..... Marine Corps customer support team
CPX ..... command post exercises
CSRT ..... customer support response team
CSSE ..... combat service support element
CST ..... command support team
CTP ..... common tactical picture

DAFIF ..... digital aeronautical flight information file
DBDB ..... digital bathymetric data base
DIA ..... Defense Intelligence Agency
DIGEST ..... digital geographic information exchange standard
DII ..... defense information infrastructure
DII COE ..... defense information infrastructure common operating environment
DISA ..... Defense Information Systems Agency
DISN ..... Defense Information Systems Network
DLA ..... Defense Logistics Agency
DMS ..... Defense Message System
DNC ..... digital nautical chart
DOD ..... Department of Defense
DODIIS ..... DOD Intelligence Information System
DPPDB ..... digital point positioning data base
DST ..... direct support team
DTAMS ..... Digital Terrain Analysis Mapping System
DTED ..... digital terrain elevation data
DTED L2 ..... digital terrain elevation data, level 2
DTOP ..... digital topographic data
DTSS ..... Digital Topographic Support System
DZ ..... drop zone

EEI ..... essential elements of information
EETI ..... essential elements of terrain information

FARP ..... forward arming and refueling point
FD ..... foundation data
FFD ..... foundation feature data
FFED ..... firefinder elevation data
FMFM ..... Fleet Marine Force manual
FOC ..... future operations center

Downloaded from http://www.everyspec.com

FSSG ..... force service support group
FTX ..... field training exercises

G-1 ..... manpower or personnel staff officer
G-2 ..... intelligence staff officer
G-3 ..... operations staff officer
G-4 ..... logistics staff officer
G-5 ..... plans officer
G-6 ..... communications and information systems officer
GAB ..... geospatial analysis branch
GBS ..... Global Broadcast System
GCCS ..... Global Command and Control System
GCE ..... ground combat element
GENSER ..... general service
GEOINT ..... geographic intelligence
GI ..... geospatial information
GID ..... Geographic Intelligence Division, MCIA
GII ..... geospatial information infrastructure
GIL ..... geospatial information library
GIMO ..... Geospatial Information Management Office
GIRS ..... geospatial information and replication system
GI&S ..... geospatial information and services
GIS ..... geographic information system
GIST ..... geographic intelligence support team
GIT ..... geographic intelligence team
GML ..... geospatial master library
GNC ..... global navigation chart
GOTS ..... government off the shelf
GPS ..... global positioning system
GS ..... general service
GSP ..... ground sensors platoon
GTR ..... geospatial technical representative

HAC ..... harbor approach and control chart
HF ..... high frequency
HLZ ..... helicopter landing zone
HPT ..... high-payoff target
HQ ..... headquarters
HQMC ..... Headquarters, Marine Corps
HUMINT ..... human intelligence
HVT ..... high-value target
HWL ..... high water line

IAS ..... intelligence analysis system
ICR ..... intelligence collection requirements

Downloaded from http://www.everyspec.com

IDR ..... intelligence dissemination requirements
IIP ..... imagery intelligence platoon
I&M ..... imagery and mapping
IMA ..... individual mobilization augmentees
IMINT ..... imagery intelligence
intel bn ..... intelligence battalion
INTELINK ..... intelligence link
IOC ..... intelligence operations center
IPB ..... intelligence preparation of the battlespace
IPC ..... integrated production concept
IPL ..... imagery product library
IR ..... intelligence requirement
ISC ..... intelligence support coordinator
ITD ..... interim terrain data
ITS ..... individual training standards
I&W ..... indications and warning

JAC ..... joint analysis center
JCS ..... Joint Chiefs of Staff
JFC ..... joint force commander
JIC ..... joint intelligence center
JISE ..... joint intelligence support element
JMCIS ..... joint maritime command information system
JNC ..... jet navigation chart
JOG ..... joint operations graphic
JOG-A/G ..... Joint operations graphic air/ground
JOPES ..... Joint Operation Planning and Execution System
JP ..... joint publication
JSCP ..... Joint Strategic Capabilities Plan
JTA ..... joint technical architecture
JTF ..... joint task force
JTTP ..... joint tactics, techniques, and procedures
JWICS ..... Joint Worldwide Intelligence Communications System

KOCOA ..... key terrain, observation and fields of fire, cover and concealment, obstacles, and avenues of approach

LAN ..... local area network
LCAC ..... landing craft, air cushion
LF ..... landing force
LOC ..... lines of communications
LOS ..... line of sight
LPA ..... littoral penetration area
LPP ..... littoral penetration point
LWD ..... littoral warfare data
LWL ..... low water line

Downloaded from http://www.everyspec.com

MADTRAN ..... mapping datum transformation software
MAGTF ..... Marine air-ground task force
MARCORSYSCOM ..... Marine Corps Systems Command
MARFOR ..... Marine Corps forces
MAW ..... Marine aircraft wing
MCCDC ..... Marine Corps Combat Development Command
MCDP ..... Marine Corps doctrinal publication
MC&G ..... mapping, charting, and geodesy
MCGIL ..... Marine Corps geospatial information library
MCGOC ..... MC&G officers course
MCGSOC ..... MC&G staff officers course
MCI ..... Marine Corps Institute
MCIA ..... Marine Corps Intelligence Activity
MCOO ..... modified combined obstacle overlay
MCPP ..... Marine Corps Planning Process
MCRP ..... Marine Corps reference publication
MCTSSA ..... Marine Corps Tactical Software Support Activity
MCU ..... Marine Corps University
MCWP ..... Marine Corps warfighting publication
MEF ..... Marine expeditionary force
METOC ..... meteorological and oceanographic
METT-T ..... mission, enemy, terrain and weather, troops and support available-time available
MEU(SOC) ..... Marine expeditionary unit (special operations capable)
MGRS ..... military grid reference system
MHG ..... MEF headquarters group
MIO ..... mapping and imagery officer
MOS ..... military occupational specialty
MOU ..... memorandum of understanding
MOUT ..... military operations on urbanized terrain
MPF ..... maritime prepositioning force
MRC ..... major regional contingency
MSC ..... major subordinate command
MSDS ..... mission specific data set
MSE ..... major subordinate element
MSI ..... multi-spectrial imagery
MSL ..... mean sea level
MSR ..... main supply route
MUSE ..... mapping, charting, geodesy utility software

NCA ..... National Command Authorities
NEO ..... noncombatant evacuation operation
NIMA ..... National Imagery and Mapping Agency
NIPRNET ..... nonsecure internet protocol router network
NIST ..... national intelligence support team
NOE ..... nap of the earth

Downloaded from http://www.everyspec.com

NRO ..... National Reconnaissance Office
NSA ..... National Security Agency
NTF ..... naval task force

OCAC ..... operations control and analysis element
OIC ..... officer in charge
OMFTS ..... operational maneuver from the sea
ONC ..... operational navigation chart
OOB ..... order of battle
OPCON ..... operational control
OPLAN ..... operation plan
OPNAVINST ..... Chief of Naval Operations Instruction
OPORD ..... operation order

P&A ..... production and analysis
P&A Co ..... production and analysis company
PDE&A ..... planning, decision, execution, & assessment
PFDB ..... planning factors data base
PIR ..... priority intelligence requirement
PITD ..... planning interim terrain data
PME ..... professional military education
POC ..... point of contact
POD ..... point of departure
PPS ..... precise positioning system

QD ..... qualified data
QRS ..... quick response system

rep ..... representative
RFI ..... request for intelligence
RPF ..... raster product format
RRS ..... remote receive station
RSI ..... remotely sensed imagery

S-2 ..... intelligence staff officer
S-3 ..... operations staff officer
S-4 ..... logistics staff officer
S-6 ..... communications and information systems officer
SARC ..... surveillance and reconnaissance cell
SATCOM ..... satellite communications
SIDS ..... secondary imagery dissemination system
SIGINT ..... signals intelligence
SIPRNET ..... Secret internet protocol router network
SITREP ..... situation report
SNCO ..... staff noncommissioned officer
SOA ..... sustained operations ashore

Downloaded from http://www.everyspec.com

SOP ..... standing operating procedures
SPMAGTF .....special purpose Marine air-ground task force
SSES .....ship's siganls exploitation space
STAFFEX .....staff exercises
STOM .....ship-to-objective maneuver

TA ..... terrain analysis
TCAC ..... technical control and analysis center
TCO .....tactical combat operations
TDN ..... tactical data network
T&E .....training and education
TEG .....tactical exploitation group
TERPES ..... tactical electronic reconnaissance processing and evaluation system
TGIL .....tactical geospatial information library tgttarget
tgt ..... target
TGTINTEL .....target inelligence
TLM .....topographic line map
T/O ..... table of organization
topo plt ..... topographic platoon
TOPOSET .....topographic set
TPC .....Topographic Production Capability
TPFDD ..... time-phased force and deployment data
TPFDL ..... time-phased force and deployment list
TRSS .....tactical remote sensor system
TS-II ..... Trojan Spirit II
TSCIF.....tactical sensitive compartmented information facility
TTADB .....tactical terrain analysis data base
TTP .....tactics, techniques, and procedures

UAV ..... unmanned aerial vehicle
USIGS .....United States Imagery and Geospatial Information System
UVMAP .....urban vector map

VHF ..... very high frequency
VITD .....vector product interim terrain data
VMAP .....vector map
VMAPL1 .....vector map level 1
VMAPL2 .....vector map level 2
VPF .....vector product format
VTC .....video teleconferencing

WAN .....wide area network
WET .....weather, enemy, and terrain
WGS ..... World Geodetic System
WRS .....war reserve stock

Downloaded from http://www.everyspec.com

Section II. Definitions

accuracy—The degree of conformity with a standard, or the degree of perfection attained in a measurement. Accuracy relates to the quality of a result, and is distinguished form precision which relates to the quality of the operation by which the result is obtained. The degree of conformity with which horizontal positions and vertical values are represented on a map, chart, or related product in relation to an established standard. (NIMA MIL-HDBK-850)

aeronautical chart—A specialized representation of mapped features of the earth, or some part of it, produced to show selected terrain, cultural, and hydrographic features, and supplemental information required for air navigation, pilotage, or for planning air operations. (JP 1-02)

aerospace—Of, or pertaining to, Earth's envelope of atmosphere and the space above it; two separate entities considered as a single realm for activity in launching, guidance, and control of vehicles that will travel in both entities. (JP 1-02)

air almanac—A joint publication of the U.S. Naval Observatory and Her Majesty's Nautical Almanac Office. It covers a 6 month period. It contains tabulated values of the Greenwich hour angle and declination of selected celestial bodies, plus additional celestial data used in navigation. (NIMA MIL-HDBK-850)

all-source intelligence—Intelligence products and/or organizations and activities that incorporate all sources of information, including, most frequently, human resources intelligence, imagery intelligence, measurement and signature intelligence, signals intelligence, and open source data, in the production of finished intelligence. (JP 1-02)

arc—A unit of measurement used in surveys of the earth and for describing distances for an environment encompassing curvature. For example, one arc minute (60 arc seconds) at the equator is equal to one nautical mile (6,080 feet). Therefore, one arc second (100 feet) is approximately 30 meters. (Dictionary of Science)

area coverage—Complete coverage of an area by aerial photography having parallel overlapping flight lines and stereoscope overlap between exposures in the flight line. Complete coverage of a geographical area by maps or other graphic materials covering all scales available. (NIMA MIL-HDBK-850)

area of interest—That area of concern to the commander, including the area of influence, areas adjacent thereto, and extending into enemy territory to the objectives of current or planned operations. This area also includes areas occupied by enemy forces who could jeopardize the accomplishment of the mission. (JP 1-02).

Downloaded from http://www.everyspec.com

astronomic surveying—The celestial determination of latitude and longitude. Separations are calculated by computing distances corresponding to measured angular displacements along the reference spheroid. (NIMA MIL-HDBK-850)

automated tactical target graphic—A tactical target materials item which provides aerial photographic coverage of a target and a limited area surrounding it at a scale permitting optimum identification of target detail. Also called ATTG. The ATTG also includes textual intelligence on a sheet separate from the graphic portion. Covers a single target and is produced in two forms: a lithographic sheet and a miniaturized version in an aperture card. (NIMA MIL-HDBK-850)

automated initial distribution—A distribution procedure by which required GI&S WRS products are provided automatically to all pre-designated GI&S WRS holders in-theater to replace current holdings with new editions, and provide required first time produced products. GI&S WRS AD maintains GI&S WRS holdings current with the latest edition of the particular item. (NIMA MIL-HDBK-850)

avenue of approach—An air or ground route of an attacking force of a given size leading to its objective or to key terrain in its path. (JP 1-02)

base map—A map or chart showing certain fundamental information, used as a base upon which additional data of specialized nature is compiled or overprinted. Also, a map containing all the information from which maps showing specialized information can be prepared. (JP 1-02)

battlespace—All aspects of air, surface, subsurface, land, space, and electromagnetic spectrum which encompass the area of influence and area of interest. (MCRP 5-12C)

cartography—The art and science of expressing graphically, by maps and charts, the known physical features of the earth, or of another celestial body; usually includes the works of a man and his varied activities. (NIMA MIL-HDBK-850)

chart—A special purpose map, generally designed for navigation or other particular purposes, in which essential map information is combined with other data critical to the intended use. (NIMA MIL-HDBK-850)

chart base—A chart used as a primary source for compilation or as a framework on which new detail is printed. Also called topographic base. (JP 1-02)

checkpoint—A predetermined point on the surface of the Earth used as a means of controlling movement, a registration target for fire adjustment, or reference for location. (JP 1-02)

city products—Large scale maps of populated places and environs, usually portraying street and through information, important buildings, and other urban features, airfields, port facilities, relief, drainage, and vegetation when important.

Downloaded from http://www.everyspec.com

Specifications for these maps vary according to particular military requirements. (NIMA MIL-HDBK-850)

coastal chart—A nautical chart intended for inshore coast wise navigation when a vessel's course may carry her inside outlying reefs and shoals, for use in entering or leaving bays and harbors of considerable size, or for use in navigating larger inland waterways. (NIMA MIL-HDBK-850)

collection—In Marine Corps usage, the gathering of intelligence data and information to satisfy the identified requirements. (MCRP 5-12C)

command and control—1. The exercise of authority and direction by a properly designated commander over assigned and attached forces in the accomplishment of the mission. Command and control functions are performed through an arrangement of personnel, equipment, communications, facilities, and procedures employed by a commander in planning, directing, coordinating, and controlling forces and operations in the accomplishment of the mission. Also called C2. (JP 1-02) **2.** Also in Marine Corps usage, the means by which a commander recognizes what needs to be done and sees to it that appropriate actions are taken. (MCRP 5-12C)

command graphic—A NIMA standard index graphic upon which is portrayed the total requirements and priorities for each product that has been validated for an organization. Normally, a command graphic is prepared for each product or product series required by a user; however, a computer listing is substituted for some products (i.e., city maps, ports, etc.). (NIMA MIL-HDBK-850)

concealment—The protection from observation or surveillance. (JP 1-02)

contour line—A line on a map or chart connecting points of equal elevation. (JP 1-02)

control markings—A caveat used in conjunction with a security classification to identify special restrictive handling conditions pertaining to the release or disclosure of classified GI&S products and related information. (NIMA MIL-HDBK-850)

country and regional precedence list—An ordered list of all countries or regions based on the importance of expected or planned DOD operations within that country or region. A DOD component or federal agency determines the order based on its mission needs, not on the status of GI&S support over the country or region. (NIMA MIL-HDBK-850)

cover—Protection from the effects of direct and indirect fires. It can be provided by ditches, caves, river banks, folds in the ground, shell craters, buildings, walls and embankments. (FM 34-130/FMFRP 3-23-2)

crisis support—The provision of an GI&S product or service, including those not previously validated, needed on a one-time or first time basis where the urgency of the requirement precludes normal processing and production

Downloaded from http://www.everyspec.com

programming action. GI&S crisis support, as defined herein, is limited to situations directed by the office of the Joint Chiefs of Staff where the possibility exists that United States forces might be deployed. (NIMA MIL-HDBK-850)

cross-country movement study—A graphic or series of graphics and supporting text or tables portraying off-road movement conditions for specific vehicles or a group of vehicles. It is usually overprinted on a medium or large scale topographic map. (NIMA MIL-HDBK-850)

data base—Information that is normally structured and indexed for user access and review. Data bases may exist in the form of physical files (folders, documents, etc.) or formatted automated data processing system data files (JP 1-02).

datum—Any numerical or geometrical quantity or set of such quantities which may serve as reference or base for other quantities. Where the concept is geometric, the plural form is "datums" in contrast to the normal plural "data." (JP 1-02)

datum (geodetic)—A reference surface consisting of five quantities: the latitude and longitude of an initial point, the azimuth of a line from that point, and the parameters of the reference ellipsoid. (JP 1-02)

declassification—The determination that in the interests of national security, classified information no longer requires any degree of protection against unauthorized disclosure, coupled with removal or cancellation of the classification designation. (JP 1-02)

Defense Information Systems Network—Integrated network, centrally managed and configured to provide long-haul information transfer services for all Department of Defense activities. It is an information transfer utility designed to provide dedicated point-to-point, switched voice and data, imagery, and video teleconferencing services. Also called DISN. (JP 1-02).

derivative classification—A determination that information is in substance the same as information that is currently classified, and the application of the classification markings. (OPNAVINST 5510.1)

displacement—In cartography it is the horizontal shift of the plotted position of a topographic feature from its true position, caused by required adherence to prescribed line weights and symbol sizes. (NIMA MIL-HDBK-850)

dissemination—Conveyance of intelligence to users in a suitable form. (JP 1-02)

DOD World Geodetic System—A unified world datum based on a combination of all available astro-geodetic, gravimetric, and satellite tracking observations. Current system is the WGS-84. (NIMATR 8350.2)

Downloaded from http://www.everyspec.com

downgrade—To determine that classified information requires, in the interests of national security, a lower degree of protection against unauthorized disclosure than currently provided, coupled with a changing of the classification designation to reflect such lower degree. (JP 1-02)

drainage—In mapping, all features associated with water, such as shorelines, rivers, lakes, marshes, etc. (NIMA MIL-HDBK-850)

editing—The process of checking a map or chart in its various stages of preparation to ensure accuracy, completeness, and correct preparation from and interpretation of the sources used, and to assure legible and precise reproduction. (NIMA MIL-HDBK-850)

electromagnetic spectrum—The range of frequencies of electromagnetic radiation from zero to infinity. It is divided into 26 alphabetically designated bands. (JP 1-02)

The entire range of wavelengths or frequencies of electromagnetic radiation extending from gamma rays to the longest radio waves and including visible light. Most remote sensing systems are designed to operate within the electromagnetic spectrum. (NIMA MIL-HDBK-850)

elevation—The vertical distance of a point or level on or affixed to the surface of the Earth measured from mean sea level. (JP 1-02)

enroute chart—A chart of air routes in specific areas that shows the exact location of electronic aids to navigation, such as radio-direction-finder stations, radio and radar marker beacons, and radio-range stations. (NIMAL 805-1)

escape and evasion graphic—A map, chart or other graphic, usually produced on a light weight durable material, specifically designed to guide personnel to safety from enemy held territory. Also called EVC. (NIMAL 805-1)

essential elements of terrain information—Those aspects of the terrain, both natural and manmade, that are identified as critical to mission success. Also called EETI. (FM 5-33)

estimate—1. An analysis of a foreign situation, development, or trend that identifies its major elements, interprets the significance, and appraises the future possibilities and the prospective results of the various actions that might be taken. **2.** An appraisal of the capabilities, vulnerabilities, and potential courses of action of a foreign nation or combination of nations in consequence of a specific national plan, policy, decision, or contemplated course of action. **3.** An analysis of an actual or contemplated clandestine operation in relation to the situation in which it is or would be conducted in order to identity and appraise such factors as available and needed assets and potential obstacles, accomplishments, and consequences. (JP 1-02).

field of fire—The area which a weapon or a group of weapons may cover effectively with fire from a given position. (JP 1-02)

Downloaded from http://www.everyspec.com

flat stock—Charts or maps which are not folded and kept for filling official and sales orders. (NIMA MIL-HDBK-850)

flight information and air facilities data—Data concerning airfields and seaplane stations and related information required for the operation of aircraft at these facilities. (NIMA MIL-HDBK-850)

gazetteer—An alphabetical list of place names giving feature identification and geographic and/or grid coordinates. (NIMAL 805-1)

general chart—A nautical chart intended for offshore coastal navigation. A general chart is of smaller scale than a coast chart, but of larger scale than a sailing chart. (NIMAL 805-1)

geodesy—The science which deals with the determination of the size and figure of the earth; which determines the external gravitational field of the earth and, to a limited degree, the internal structure; and which derives three-dimensional positions for points above, on, and below the surface of the earth. (NIMA MIL-HDBK-850)

geodetic coordinates—The quantities of latitude, longitude, and height (ellipsoid), which define the position of a point on the surface of the earth with respect to the reference spheroid. Also imprecisely called geographic coordinates. (NIMA MIL-HDBK-850)

geodetic and geophysical (G&G) surveys—G&G surveys are required to support the testing and deployment of DOD weapon systems. G&G surveys include the acquisition of the following data; geodetic/astronomic coordinates; bathymetric data; mean gravity anomalies, deflection of the vertical, geoid heights; geodetic datum conversion factors; and magnetic or gravity data. (NIMA MIL-HDBK-850)

geographic—Signifying a basic interrelationship of features on, above, and in the earth when considered as a globe shaped body. The term geographic is applied alike to data based on the geoid and other spheroids. (NIMA MIL-HDBK850)

geographic coordinates—The quantities of latitude and longitude which define the position of a point on the surface of the Earth with respect to the reference spheroid. (JP 1-02)

geographic intelligence—The process of collecting, organizing, analyzing, synthesizing, disseminating, and utilizing geospatial information and services (GI&S) with regards to the military aspects of the terrain. Also called GEOINT. GEOINT is the integration and analysis of all-source geospatial information in support of specific Marine Corps operations. The analysis is focused on a specific mission and includes intensification of information detail and resolution to meet tactical requirements. GEOINT analysis is focused on the intelligence preparation of the battlespace (IPB) process and addresses key terrain, observation and fields of fire, cover andconcealment, obstacles, avenues of approach

Downloaded from http://www.everyspec.com

and mobility corridors. This analysis is commonly referred to as KOCOA for easy reference.

geoid—The equipotential surface in the gravity field of the earth which coincides with the undisturbed mean sea level extended continuously through the continents. The direction of gravity is perpendicular to the geoid at every point. (NIMA MIL-HDBK-850)

georectification—The process of aligning the feature of a geographical representation (image or map) to its true location on the Earth within a specified datum and coordinate system and to an acceptable accuracy standard. Also called geocontrolled. (proposed for inclusion in JP 1-02)

georef—A worldwide position reference system that may be applied to any map or chart graduated in latitude and longitude regardless of projection. It is a method of expressing latitude and longitude in a form suitable for rapid reporting and plotting. (JP 1-02)

geospatial framework—a consistent set of geospatial information and supporting services that provides a coherent frame of reference to support the formation of an integrated view of the mission space. (DOD GI Master Plan)

geospatial information and services—The concept for collection, information extraction, storage, dissemination, and exploitation of geodetic, geomagnetic, imagery (both commercial and national source), gravimetric, aeronautical, topographic, hydrographic, littoral, cultural, and toponymic data accurately referenced to a precise location on the earth's surface. These data are used for military planning, training, and operations including navigation, mission planning, mission rehearsal, modeling, simulation and precise targeting. Geospatial information provides the basic framework for battlespace visualization. It is information produced by multiple sources to common interoperable data standards. It may be presented in the form of printed maps, charts, and publications; in digital simulation and modeling data bases; in photographic form; or in the form of digitized maps and charts or attributed centerline data. Geospatial services include tools that enable users to access and manipulate data, and also includes instruction, training, laboratory support, and guidance for the use of geospatial data. Also called GI&S. (JP 1-02)

global information infrastructure—The worldwide interconnection of communications networks, computers, databases, and consumer electronics that make vast amounts of information available to users. The global information infrastructure encompasses a wide range of equipment, including cameras, scanners, keyboards, facsimile machines, computers, switches, compact disks, video and audio tape, cable, wire, satellites, fiber-optic transmission lines, networks of all types, televisions, monitors, printers, and much more. The friendly and adversary personnel who make decisions and handle the transmitted information constitute a critical component of the global information infrastructure. Also called GII. (JP 1-02)

Downloaded from http://www.everyspec.com

GI&S precedence—A ranking of individual items within a given priority. The precedence are used as one of the factors in allocating NIMA production resources. (CJCSI 3901.01)

GI&S priorities—The priorities defined by the JCS for indicating the relative importance of GI&S geographical area and weapons systems support requirements. The priorities are used as one of the factors in allocating NIMA production resources. Priority definitions are contained in the Joint Strategic Planning Document. (CJCSI 3901.01)

GI&S product—A specific item (i.e., map, chart, digital tape, report) approved by NIMA to support military, intelligence, and statutory requirements. (NIMA MIL-HDBK-850)

GI&S requirement—A validated statement of need for an GI&S product or service identified by a user to support his operational and training requirements, stated in terms of specific geographic areas and installations, and intended uses and/or accuracy's required. (NIMA MIL-HDBK-850)

GI&S service—A support service such as geodetic and geophysical (G&G) surveys to support the testing and deployment of DOD weapons systems. G&G support includes projects, surveys, and services that provide geodetic/astronomic coordinates; bathymetric data; mean gravity anomalies, deflections of the vertical, geoid heights; geodetic datum conversions factors; and the earth's global gravity and magnetic field models. (NIMA MIL-HDBK-850)

Global Command and Control System—Highly mobile, deployable command and control system supporting forces for joint and multinational operations across the range of military operations, any time and anywhere in the world with compatible, interoperable, and integrated command, control, communications, computers, and intelligence systems. Also called GCCS. (JP 1-02).

global information infrastructure—The worldwide interconnection of communications networks, computers, databases, and consumer electronics that make vast amounts of information available to users. The global information infrastructure encompasses a wide range of equipment, including cameras, scanners, keyboards, facsimile machines, computers, switches, compact disks, video and audio tape, cable wire, satellites, fiber-optic transmission lines, networks of all types, televisions, monitors, printers, and much more. The friendly and adversary personnel who make decisions and handle the transmitted information constitue a critical component of the global information infrastructure. Also called GII. (JP 1-02)

global navigation chart—A 1:5,000,000 scale series of multicolored charts designed for general planning purposes for operations involving long distances or large areas of in-flight navigation in long range, high altitude, high speed aircraft. Also called GNC. (NIMAL 805-1)

Downloaded from http://www.everyspec.com

gradient—1. The rate of inclination to horizontal expressed as a ratio, such as 1:25, indicating a one unit rise to 25 units of horizontal distance. (JP 1-02) **2.** A rate of rise or fall of a quantity against horizontal distance expressed as a ration, decimal, fraction, percentage, or the tangent of the angle of inclination. Also called the percentage of slope. (NIMA MIL-HDBK-850)

graphic—Any and all products of the cartographic and photogrammetric art. A graphic may be a map, chart, or mosaic or even a film strip that was produced using cartographic techniques. (JP 1-02)

grid—1. Two sets of parallel lines intersecting at right angles and forming squares; the grid that is superimposed on maps, charts, and other similar representation of the Earth's surface in an accurate and consistent manner to permit identification of ground locations with respect to other locations and the computation of direction and distance to other points. **2.** A term used in giving the location of a geographic point by grid coordinates. (JP 1-02)

grid declination—The angular difference in direction between grid north and true north. It is measured east or west from true north. (NIMA MIL-HDBK-850)

harbor chart—A nautical chart intended for navigation and anchorage in harbors and smaller waterways. (JP 1-02)

hydrographic reconnaissance—Reconnaissance of an area of water to determine depths, beach gradients, the nature of the bottom, and the location of coral reefs, rocks, shoals, and manmade obstacles. (JP 1-02) hydrography—**1.** The science which deals with the measurements and description of the physical features of the oceans, seas, lakes, rivers, and their adjoining coastal areas, with particular reference to their use for navigational purposes. (JP 1-02) **2.** Also that part of topography pertaining to water and drainage features. (NIMA MIL-HDBK-850)

hydrographic chart—A nautical chart showing depths of water, nature of bottom, contours of bottom and coastline, and tides and currents in a given sea or sea and land area. (JP 1-02)

hypsography—The science or art of describing elevations of land surfaces with reference to a datum, usually sea level. Also that part of topography dealing with relief or elevation of terrain. (NIMA MIL-HDBK-850)

hypsometric tinting—A method of showing relief on maps and charts by coloring in different shades those parts which lie between selected levels. Sometimes referred to as elevation tint; altitude tint; layer tint. (JP 1-02)

imagery—Collectively, the representations of objects reproduced electronically or by optical means on film, electronic display devices, or other media. (JP 1-02)

intelligence—1. The product resulting from the collection, processing, integration, analysis, evaluation, and interpretation of available information concerning

Downloaded from http://www.everyspec.com

foreign countries or areas. **2.** Information and knowledge about an adversary obtained through observation, investigation, analysis, or understanding. (JP 1-02) **3.** Also in Marine Corps usage, intelligence is knowledge about the enemy or the surrounding environment needed to support decisionmaking. This knowledge is the result of the collection, processing, exploitation, evaluation, integration, analysis, and interpretation of available information about the battlespace and threat. (MCRP 5-12C)

intelligence cycle—The steps by which information is converted into intelligence and made available to users. (JP 1-02)

intelligence operations—The variety of intelligence tasks that are carried out by various intelligence organizations and activities. (JP 1-02)

intelligence preparation of the battlespace—1. An analytical methodology employed to reduce uncertainties concerning the enemy, environment, and terrain for all types of operations. Intelligence preparation of the battlespace builds an extensive data base for each potential area in which a unit may be required to operate. The data base is then analyzed in detail to determine the impact of the enemy, environment, and terrain on operations and presents it in graphic form. Intelligence preparation of the battlespace is a continuing process. Also called IPB. (JP 1-02) **2.** In Marine Corps usage, the systematic, continuous process of analyzing the threat and environment in a specific geographic area. (MCRP 5-12C)

intelligence requirement—1. Any subject, general or specific, upon which there is a need for the collection of information, or the production of intelligence. Also called IR. (JP 1-02) **2.** In Marine Corps usage, questions about the enemyand the environment, the answers to which a commander requires to make sound decisions. (MCRP 5-12C)

intensification—The process of increasing the density of information contained in the geospatial data base or increasing the amount of attribute information associated with a known feature. (Approved for inlcusion in next revision of MCRP 5-12C.)

interoperability—1. The ability of systems, units or forces to provide services to and accept services from other systems, units or forces and to use the services so exchanged to enable them to operate effectively together. **2.** The condition achieved among communications-electronics systems or items of communications-electronics equipment when information or services can be exchanged directly and satisfactorily between them and/or their users. The degree of interoperability should be defined when referring to specific cases. (JP 1-02).

item precedence—A numerical value assigned to an GI&S requirement for a product or service based on the relative importance of each item to another within a product line or service; and within a country, region, or mission area. (CJCSI 3901.01)

Downloaded from http://www.everyspec.com

jet navigation chart—A 1:2,000,000 scale, coordinated series of multicolored charts, designed to satisfy long range navigation of high altitude, high speed aircraft. Also called JNC. (NIMAL 805-1)

joint force—A general term applied to a force composed of significant elements, assigned or attached, of two or more Military Departments, operating under a single joint force commander. (JP 1-02)

joint intelligence center—The intelligence center of the joint force headquarters. The joint intelligence center is responsible for providing and producing the intelligence required to support the joint force commander and staff, components, task forces and elements, and the national intelligence community. Also called JIC. (JP 1-02)

joint operations—A general term to describe military actions conducted by joint forces, or by Service forces in relationships (e.g., support, coordinating authority), which, of themselves, do not create joint forces. (JP 1-02)

joint force commander—A general term applied to a combatant commander, subunified commander, or joint task force commander authorized to exercise combatant command (command authority) or operational control over a joint force. Also called JFC. (JP 1-02).

joint intelligence preparation of the battlespace—The analytical process used by joint intelligence organizations to produce intelligence assessments, estimates and other intelligence products in support of the joint commander's decision making process. It is a continuous process that includes defining the total battlespace environment; describing battlespace characteristics; evaluating the adversary; and determining and describing adversary courses of action. The process is used to analyze the surface, sub-surface, endoatmospheric, exoatmospheric, electromagnetic, cyberspace, and human dimensions of the environment and to determine an opponent's capabilities to operate in each. Joint intelligence preparation of the battlespace products are used by other staff elements in preparing their estimates and are also applied during the analysis and selection of friendly courses of action. All called JIPB. (proposed for inclusion in JP 1-02).

joint operations graphic—The standard 1:250,000 scale DOD cartographic product which may be produced to meet the validated U.S. Command's and Military Department's area requirements. Also called JOG. (NIMAL 805-1)

Joint Operation Planning and Execution System—A continuously evolving system that is being developed through the integration and enhancement of earlier planning and execution systems: Joint Operation Planning System and Joint Deployment System. It provides the foundation for conventional command and control by national- and theater-level commanders and their staffs. It is designed to satisfy their information needs in the conduct of joint planning and operations. Joint Operation Planning and Execution System (JOPES) includes joint operation planning policies, procedures, and reporting structures supported by

Downloaded from http://www.everyspec.com

communications and automated data processing systems. JOPES is used to monitor, plan, and execute mobilization, deployment, employment, and sustainment activities associated with joint operations. Also called JOPES. (JP 1-02).

Joint Worldwide Intelligence Communications System—The sensitive compartmented information portion of the Defense Information System Network. It incorporates advanced networking technologies that permit point-to-point or multipoint information exchange involving voice, text, graphics, data, and video teleconferencing. Also called JWICS. (JP 1-02).

key terrain—Any locality, or area, the seizure or retention of which affords a marked advantage to either combatant. (JP 1-02)

large scale map—A map having a scale of 1:75,000 or longer (JP 1-02).

lines of communications—A route, either land, water, and/or air, which connect an operating military force with a base of operations and along which supplies and military forces move. Also called LOC. (JP 1-02)

map—A graphic representation, usually on a plane surface and at an established scale, of natural or artificial features on the surface of a part or the whole of the Earth or other planetary body. The features are positioned relative to a coordinate reference system (JP 1-02)

mapping, charting, and geodesy—Maps, charts, and other data used for military planning, operations, and training. These products and data support air, land, and sea navigation; weapon system guidance; target positioning; and other military activities. These data are presented in the forms of topographic, planimetric, imaged, or thematic maps and graphics; nautical and aeronautical charts and publications; and, in digital and textual formats, gazetteers, which contain geophysical and geodetic data and coordinate lists. Also called MC&G. (JP 1-02) (Note: see geospatial information and services [GI&S], which is the planned replacement term for MC&G.)

map reference—A means of identifying a point on the surface of the Earth by relating it to information appearing on a map, generally the graticule or grid. (JP 1-02)

map series—A group of maps or charts usually having the same scale and cartographic specifications, and with each sheet appropriately identified by producing agency as belonging to the same series. (JP 1-02)

map sheet—An individual map or chart either complete in itself or part of a series. (JP 1-02)

marginal data—All explanatory information given in the margin of a map or chart which clarifies, defines, illustrates, and/or supplements the graphic portion of the sheet. (JP 1-02)

Downloaded from http://www.everyspec.com

Marine Corps Planning Process—A six-step methodology which helps organize the thought process of the commander and staff throughout the planning and execution of military operations. It focuses on the threat and is based on the Marine Corps philosophy of maneuver warfare. It capitalizes on the principle of unity of command and supports the establishment and maintenance of tempo. The six steps consist of mission analysis, course of action development, course of action analysis, comparison/decision, orders development and transition. Also called MCPP. Note: Tenents of the MCPP include top down planning, single battle concept, and integrated planning.

medium scale map—A map having a scale larger than 1:600,000 and smaller than 1:75,000 (JP 1-02).

metadata—Information about information; more specifically, information about the meaning of other data. (JP 1-02)

meteorology—The study dealing with the phenomena of the atmosphere including the physics, chemistry, and dynamics extending to the effects of the atmosphere on the earth's surface and the oceans. (JP 1-02)

military geography—The specialized field of geography dealing with natural and manmade physical features that may affect the planning and conduct of military operations. (JP 1-02)

military geographic documentation—1. Military geographic information which has been evaluated, processed, summarized, and published. (JP 1-02) **2.** MGD can also include terrain analysis and terrain studies. Also called MGD. (NIMA MIL-HDBK-850)

military geographic information—Comprises the information concerning physical aspects, resources, and artificial features which is necessary for planning and operations. (JP 1-02)

military geographic intelligence—Information concerning physical aspects, resources, and artificial features of the earth which is independently meaningful and can be utilized directly in support of planning and conducting military operations. It is produced from terrain information interpreted in relation to its effects on personnel, equipment and material. Also called MGI. (NIMA MIL-HDBK-850)

military grid reference system—A system which uses a standard-scaled grid square, based on a point of origin on a map projection of the surface of the Earth in an accurate and consistent manner to permit either position referencing or the computation of direction and distance between grid positions. (JP 1-02)

mission specific data set—Further densification of global geospatial foundation data. Information created to support specific operations, operation plans, training or system development. Information conforms to established DOD data specifications. Also called MSDS. (JP 1-02)

Downloaded from http://www.everyspec.com

mobility corridor—Areas where a force will be canalized due to terrain restrictions. they allow military forces to capitalize on the principles of mass and speed and are therefore relatively free of obstacles. (FM 34-130/FMFRP 3-23-2).

modified combined obstacle overlay—A product used to depict the battlespace's effects on military operations. It is normally based on a product depicting all obstacles to mobility, modified to also depict the following, which are not prescriptive nor inclusive: cross-country mobility classifications (such as RESTRICTED); objectives, avenues of approach and mobility corridors; likely locations of countermobility obstacle systems; likely engagement areas; and key terrain. Also called MCOO. (MCRP 5-12C)

native map—A map of a foreign country produced by indigenous governmental or private agencies, that may or may not be compiled to National Imagery and Mapping Agency specifications and standards. (NIMA MIL-HDBK-850)

NEOPACK—Preassembled package of selected maps, charts, and other geographic materials of various scales to support the planning and conduct of noncombatant evacuation operations in selected countries or areas. (JP 1-02)

new edition—Contains changes of such importance to map or chart users that all previous printings are made obsolete. (NIMA MIL-HDBK-850)

national intelligence support team—A nationally sourced team composed of intelligence and communications experst from either Defense Intelligence Agency, Central Intelligence Agency, National Security Agency, National Imagery and Mapping Agency, or any combination of these agencies. Also called NIST (JP 1-02).

noncombatant evacuation operations—Operations directed by the Department of State, the Department of Defense, or other appropriate authority whereby noncombatants are evacuated from foreign countries when their lives are endangered by war, civil unrest, or natural disaster to safe havens or to the United States. Also called NEO. (JP 1-02)

obsolete chart—A chart which is not considered safe to use for navigation because it does not contain the latest important navigation information. (NIMA MIL-HDBK-850)

observation—The ability to see the threat either visually or through the use of surveillance devices. (FM 34-130/FMFRP 3-23-2)

obstacle—1. Any obstruction designed or employed to disrupt, fix, turn, or block the movement of an opposing force, and to impose additional losses in personnel, time, and equipment on the opposing force. Obstacles can exist naturally or can be manmade, or can be a combination of both. (MCRP 5-12C) **2.** An natural or manmade terrain feature that stops, impedes, or diverts military movement. (FM 34-130/FMFRP 3-23-2)

Downloaded from http://www.everyspec.com

oceanography—The study of the sea, embracing and integrating all knowledge pertaining to the sea and its physical boundaries, the chemistry and physics of seawater, and marine biology. (JP 1-02)

operational need—The relative importance of an individual product item or request for service. The DOD component or federal agency uses the service provided guidance for product significance or a product line to a force or system and applies it to a specific operational situation. (CJCSI 3901.01)

operational risk—The overall risk to the success of the mission, based on the level of GI&S support that can be provided at the time of mission execution. Operational risk may be considered to be unacceptable. (CJCSI 3901.01)

operation navigation chart—chart at a scale of 1:1,000,000 which represents the combined requirements for a graphic to satisfy special military operations as well as general navigation uses. Also called ONC. (NIMAL 805-1)

original classification—An initial determination that information requires, in the interest of national security, protection against unauthorized disclosure, together with a classification designation signifying the level of protection required. (OPNAVINST 5510.1)

original classification authority—The authority to determine that information requires, in the interest of national security, protection against unauthorized disclosure, together with a classification designation signifying the level of protection required. (OPNAVINST 5510.1)

orthorectifiy—The removal of distortions that may occur in original source imagery, allowing the imagery to become a true scale representation of the ground and useable in automated systems for measurements of length, width, and azimuth. (proposed for inclusion in JP 1-02)

orthomorphic projection—A projection in which the scale, although varying throughout the map, is the same in all directions at any point, so that very small areas are represented by correct shape and bearings are correct. (JP 1-02)

overprint—Information printed or stamped upon a map or chart, in addition to that originally printed, to show data of importance or special use. (JP 1-02)

photomap—A reproduction of a photograph or photomosaic upon which the grid lines, marginal data, contours, place names, boundaries, and other data may be added. (JP 1-02)

planning factors data base—Data bases created and maintained by the Military Services for the purpose of identifying all geospatial information and services requirements for emerging and existing forces and systems. The data base identifies: unit requirements for geospatial data and services; system requirements for standard DOD geospatial data and services, research, development, test, and evaluation requirements for developmental systems, identified by

Downloaded from http://www.everyspec.com

Milestone; and initial operating capability and full operating capability for emerging systems. Also called PFDB. (JP 1-02)

priority intelligence requirements—1. Those intelligence requirements for which a commander has an anticipated and stated priority in his task of planning and decisionmaking. Also called PIR. (JP 1-02) **2.** In Marine Corps usage, an intelligence requirement associated with a decision that will critically affect the overall success of the command's mission. (MCRP 5-12C)

product—The end item produced from GI&S source material for distribution in an appropriate medium, such as lithographic chart/map, video disc, CD-ROM, WORM, magnetic tape, computer printout, etc. The regulations regarding GI&S products are applicable regardless of the medium in which the final product is distributed. (NIMA MIL-HDBK-850)

profile—A vertical section of the surface of the ground, or of underlying strata, or both, along any fixed line. (NIMA MIL-HDBK-850)

radar intelligence map—An intermediate element in the process of light optical radar simulation and in the production of analytical predictions. Also called RIM. (NIMA MIL-HDBK-850)

reach back—The ability to exploit resources, capabilities, expertise, etc., not physically located in the theater or joint operations area, when established (MCRP 5-12C).

recompilation—The process of producing a map or chart that is essentially a new item and which replaces a previously published item. Normally, recompilation of a map or chart involves significant change to the horizontal position of features, revision of vertical values, improvement in planimeteric or navigational data, or any combination of these factors. (NIMA MIL-HDBK-850)

reconnaissance—A mission undertaken to obtain, by visual observation or other detection methods, information about the activities and resources of an enemy or potential enemy, or to secure data concerning the meteorological, hydrographic, or geographic characteristics of a particular area. (JP 1-02)

reference datum—In GI&S usage, a general term applied to any datum, plane, or surface used as a reference or base from which other quantities can be measured. (NIMA MIL-HDBK-850)

release—The physical issuance of classified or unclassified GI&S information or released data to a U.S. national, an official representative of a foreign government or international organization who possesses the necessary clearance and has the need-to-know. The issuance is to be made in concert with the NDP-1 and is in the best interest of the United States. (NIMA MIL-HDBK-850)

relief—Inequalities of elevation and the configuration of land features on the surface of the Earth which may be represented on maps or charts by contours, hypsometric tints, shading, or spot elevations. (JP 1-02)

Downloaded from http://www.everyspec.com

restricted—A classification indicating terrain that hinders movement. Little effort is needed to enhance mobility through restricted terrain but units may have difficulty maintaining preferred speeds, moving in combat formations, or transitioning from one formation to another. A force can generally use administrative or march formations through restricted terrain with only minimal delay. (FM 34-130/FMFRP 3-23-2)

road map—A medium or small scale special purpose map, generally showing only planimetric detail, with emphasis upon the road network and related data. Its main purpose is to furnish pertinent road information for tactical and administrative troop movement. (NIMA MIL-HDBK-850)

sailing chart—A small scale chart used for offshore sailing between distant coastal ports and for plotting the navigator's position out of sight of land and as he approaches the coast from the open ocean. (NIMAL 805-1)

sailing directions—A descriptive book for the use of mariners, containing detailed information of coastal waters, harbor facilities, as well as other information. (NIMAL 805-1) sanitize—Revise a report or other document in such a fashion as to prevent identification of sources, or of the actual persons and places with which it is concerned, or of the means by which it was acquired. Usually involves deletion or substitution of names and other key details. (JP 1-02)

satellite geodesy—The discipline which employs observations of an earth satellite to extract geodetic information. (NIMA MIL-HDBK-850)

scale—The ratio or fraction between the distance on a map, chart, or photograph and the corresponding distance on the surface of the Earth. (JP 1-02)

search and rescue chart—A chart designed primarily for directing and conducting search and rescue operations. (NIMAL 805-1)

severely restricted—A classification indicating terrain that severely hinders or slows movement in combat formations unless some effort is made to enhance mobility. Severely restricted terrain includes manmade obstacles, such as minefield and cities, as well as natural barriers. Severely restricted terrain generally slows or impedes administrative and march formations. (FM 34-130/FMFRP 3-23-2)

situational awareness—Knowledge and understanding of the current situation which promotes timely, relevant and accurate assessment of friendly, enemy and other operations within the battlespace in order to facilitate decisionmaking. An informational perspective and skill that foster an ability to determine quickly the context and relevance of events that are unfolding. Also called SA. (MCRP 5-12C).

small scale map—A map having a scale smaller than 1:600,000 (JP 1-02).

source materials—A collection term used in this publication to include collaborative GI&S products and related data of all types. This includes aerial

Downloaded from http://www.everyspec.com

photography, radar scope photography, maps, charts, graphics, geodetic data, bathymetric data, geomagnetic or gravity data, intelligence reports, and airfield data. (NIMA MIL-HDBK-850)

staff cognizance—The responsibility and authority over designated staff functions assigned to a general or executive staff officer (or their subordinate staff officers) in his are of primary interest. These responsibilities and authorities can range from coordination within the staff to the assignment or delegation to the staff officer by the commander to exercise his authority for a specified warfighting function or sub-function. Staff cognizance includes the responsibility for effective use of available resources and may include the authority for planning the employment of, organizing, assigning tasks, coordinating, and controlling forces for the accomplishment of assigned missions. Marine Corps orders and doctrine provide the notional staff cognizance for general or executive staff officers, which may be modified by the commander to meet his requirements. (Proposed for MCWP 6-2)

stereoscopic—Two separate images (as opposed to monoscopic) in which the eye views the subject from a different angle through separate optical paths. Dual images slightly offset allows for the determination of elevation data. (proposed for inclusion in JP 1-02)

sustained operations ashore—The employment of Marine Corps forces on land for an extended duration. It can occur with or without sustainment from the sea. Also called SOA (MCRP 5-12C).

tactical intelligence—1. Intelligence that is required for planning and conducting tactical operations. (JP 1-02) **2.** In Marine Corps usage, tactical intelligence is concerned primarily with the location, capabilities, and possible intentions of enemy units on the battlefield and with the tactical aspects of terrain and weather within the battlespace. (MCRP 5-12C) terrain analysis—The collection, analysis, evaluation, and interpretation of geographic information on the natural and manmade features of the terrain, combined with other relevant factors, to predict the effect of the terrain on military operations. (JP 1-02) terrain intelligence—Processed information on the military significance of natural and manmade characteristics of an area. (JP 1-02)

terrain study—An analysis and interpretation of natural and manmade features of an area, their effects on military operations, and the effect of weather and climate on these features. (JP 1-02)

thematic layer—A map layer designed to portray a specific set of geographic features (such as transportation, vegetation or drainage features). (This pub will be the source). (Approved for inclusion in next revision of MCRP 5-12C.)

topographic map—A map which presents the vertical position of features in measurable form as well as their horizontal positions. (JP 1-02)

Downloaded from http://www.everyspec.com

topography—The configuration of the ground to include its relief and all features. Topography addresses both dry land and the sea floor (underwater topography). (JP 1-02)

trafficability—Capability of terrain to bear traffic. It refers to the extent to which the terrain will permit continued movement of any and/or all types of traffic. (JP 1-02)

traffic circulation map—A map showing traffic routes and the measures for traffic regulation. It indicates the roads for use of certain classes of traffic, the location of traffic control stations, and the directions in which traffic may move. Also called a circulation map. (JP 1-02)

triaxial coordinates—Any coordinate system that includes values for the x, y & z axis (latitude, longitude, & elevation) of a point. (Approved for inclusion in next revision of MCRP 5-12C.)

unrestricted—A classification indicating terrain that is free of restrictions to movement. (FM 34-130/FMFRP 3-23-2)

unsymbolized feature—Any feature that is resident within the geospatial information library that does not have an associated standard symbol for either hard copy or electronic visualization/display. Such features will be represented as either a point, line or polygon. (Approved for inclusion in next revision of MCRP 5-12C.)

value-adding—The capability to develop and integrate new tactical information into existing geospatial information libraries in order to enhance information content in support of tactical operations. (Approved for inclusion in next revision of MCRP 5-12C.)

warfighting functions—The six mutually supporting military activities integrated in the conduct of all military operations are:

1. command and control—The means by which a commander recognizes what needs to be done and sees to it that appropriate actions are taken.

2. maneuver—The movement of forces for the purpose of gaining an advantage over the enemy.

3. fires—Those means used to delay, disrupt, degrade, or destroy enemy capabilities, forces, or facilities as well as affect the enemy's will to fight.

4. intelligence—Knowledge about the enemy or the surrounding environment needed to support decisionmaking.

5. logistics—All activities required to move and sustain military forces.

6. force protection—Actions or efforts used to safeguard own centers of gravity while protecting, concealing, reducing, or eliminating friendly critical vulnerabilities. (MCRP 5-12C)

war reserve stocks—That portion of total materiel assets which is designated to satisfy the war reserve materiel requirement. Also called WRS. (JP 1-02)