Downloaded from http://www.everyspec.com

MCRP 6-22D

FIELD ANTENNA HANDBOOK

U.S. Marine Corps

Downloaded from http://www.everyspec.com

To Our Readers

Changes: Readers of this publication are encouraged to submit suggestions and changes that will improve it. Recommendations may be sent directly to Commanding General, Marine Corps Combat Development Command, Doctrine Division (C 42), 3300 Russell Road, Suite 318A, Quantico, VA 22134-5021 or by fax to 703-784-2917 (DSN 278-2917) or by E-mail to **smb@doctrine div@mccdc**. Recommendations should include the following information:

- Location of change
  - Publication number and title
  - Current page number
  - Paragraph number (if applicable)
  - Line number
  - Figure or table number (if applicable)
- Nature of change
  - Add, delete
  - Proposed new text, preferably double-spaced and typewritten
- Justification and/or source of change

Additional copies: A printed copy of this publication may be obtained from Marine Corps Logistics Base, Albany, GA 31704-5001, by following the instructions in MCBul 5600, *Marine Corps Doctrinal Publications Status*. An electronic copy may be obtained from the Doctrine Division, MCCDC, world wide web home page which is found at the following universal reference locator: **http://www.doctrine.quantico.usmc.mil**.

Unless otherwise stated, whenever the masculine or feminine gender is used, both men and women are included.

Downloaded from http://www.everyspec.com

DEPARTMENT OF THE NAVY
Headquarters United States Marine Corps
Washington, D.C. 20380-1775

1 June 1999

FOREWORD

Communications and information systems (CIS) support collecting, processing, and exchanging information. CIS automate routine functions, freeing commanders and staffs to focus on the aspects of command and control that require experience, judgment, and intuition. Personnel who install, operate, and maintain CIS play a key role in the command and control of the Marine air-ground task force (MAGTF). It is an understatement to say that the success of the MAGTF in the modern battlespace depends on the effective employment of CIS.

One of the most important networks of the MAGTF CIS architecture is single-channel radio (SCR). SCR is the principal means of communications support for maneuver units. SCR communications equipment is easy to operate, and networks are easily established, rapidly reconfigured, and, most importantly, easily maintained on the move. SCR provides secure voice communication and supports limited data information exchange. MAGTF SCR equipment is fielded in many configurations and includes hand-held, manpack, vehicle-mounted, bench-mounted, and sheltered radios. These radios operate in simplex and half-duplex modes. The most widely employed tactical radios provide integrated communications security (COMSEC) and jam resistance through frequency hopping.

Downloaded from http://www.everyspec.com

Tactical SCRs operate in the three military radio frequency bands (high frequency [HF], very high frequency [VHF], and ultrahigh frequency [UHF]). In the HF band, SCR can support long-range communications, albeit at the expense of mobility. SCR in the VHF and UHF bands is normally limited to line of sight. SCR satellite communications (SATCOM) provide mobility, flexibility, and ease of operation with unlimited range. Limitations of SCR include susceptibility to enemy electronic warfare; cosite, footprint, terrain, and atmospheric interference; the requirement for close coordination and detailed planning; a need for common timing, frequency, and equipment; and limited spectrum availability. The latter is particularly critical for SATCOM.

Of all the variables affecting single-channel radio communications, the one factor that an operator has the most control over is the antenna. With the right antenna, an operator can change a marginal net into a reliable net. Marine Corps Reference Publication (MCRP) 6-22D, *Antenna Handbook*, gives operators the knowledge to properly select and employ antennas to provide the strongest possible signal at the receiving station of the circuit.

MCRP 6-22D builds on the doctrinal foundation established in Marine Corps Warfighting Publication (MCWP) 6-22, *Communications and Information Systems*. This handbook is intended not only for CIS officers and radio operators, but for all personnel desiring information about antenna fundamentals.

MCRP 6-22D supersedes Fleet Marine Force Reference Publication (FMFRP) 3-34, *Field Antenna Handbook*, dated 5 March 1991.

Downloaded from http://www.everyspec.com

Reviewed and approved this date.

BY DIRECTION OF THE COMMANDANT OF THE MARINE CORPS

J. E. RHODES
Lieutenant General, U.S. Marine Corps
Commanding General
Marine Corps Combat Development Command

DISTRIBUTION: 144 000062 00

Downloaded from http://www.everyspec.com

Antenna Handbook

Table of Contents

Page

Chapter 1. Radio Principles

Electromagnetic Radiation 1-1
Radio Waves 1-2
Frequency 1-2
Frequency Calculation 1-3
Frequency Bands 1-3
Radio Communication Circuit 1-5
Propagation Fundamentals 1-8
Earth's Atmosphere 1-8
Radio Wave Propagation 1-8
Other Factors Affecting Propagation 1-18
Path Loss 1-19
Reflected Waves 1-19
Diffraction 1-21
Tropospheric Refraction, Ducting and Scattering 1-22
Noise 1-23
Natural Noise 1-24
Manmade Noise 1-24

Downloaded from http://www.everyspec.com

Chapter 2. Antenna Fundamentals

Section I. Concepts and Terms 2-2

Forming a Radio Wave 2-2
Radiation 2-2
Radiation Fields 2-3
Radiation Patterns 2-4
Polarization 2-6
Polarization Requirements for Various Frequencies 2-8
Advantages of Vertical Polarization 2-9
Advantages of Horizontal Polarization 2-10
Directionality 2-10
Resonance 2-11
Reception 2-12
Reciprocity 2-13
Impedance 2-14
Bandwidth 2-15
Gain 2-16
Take-Off Angle 2-18

Section II. Ground Effects 2-19

Grounded Antenna Theory 2-19
Types of Grounds 2-20
Counterpoise 2-22
Ground Screen 2-23

Section III. Calculating Antenna Length 2-24

Section IV. Antenna Orientation 2-26

Downloaded from http://www.everyspec.com

Azimuth 2-26
Improvement of Marginal Communications 2-27
Transmission and Reception of Strong Signals 2-29

Chapter 3. Transmission Lines

Properties 3-1
Transmission Line Types 3-1
Minimizing Energy Loss 3-3
Impedance 3-3
Optimizing Line Length 3-5
Attenuation 3-6
Making the Best Use of Available Transmission Lines 3-7
Twin-Lead Limitations 3-8
Directly Connecting the Transceiver and Antenna 3-9
Baluns 3-10
Cable Connectors 3-11
Balanced Antenna 3-11

Chapter 4. HF Antenna Selection

Antenna Selection Procedure 4-2
Determining Antenna Gain 4-6
Antenna Types 4-8
AS-2259/GR 4-9
Vertical Whip 4-10
Half-Wave Dipole 4-14
Inverted Vee 4-19

Downloaded from http://www.everyspec.com

Long Wire 4-21
Inverted L 4-24
Sloping Vee 4-28
Sloping Wire 4-33
Vertical Half-Rhombic 4-37
HF NVIS Communications 4-40

Chapter 5. VHF and UHF Antenna Selection

Frequencies 5-1
Polarization 5-2
Gain and Directivity 5-2
Gain 5-3
Directivity 5-3
Transmission Lines 5-4
Radiators 5-5
Vertical Radiator 5-5
Cross Section Radiator 5-5
Insulation 5-5
Interference 5-6
Noise 5-6
Multipath Interference 5-6
Vegetated Areas 5-8
Antenna Types 5-9
Vertical Whip 5-9
OE-254 5-10
Antenna Within Vehicle Interior 5-12
HF Antenna Types Usable at VHF and UHF 5-12
Dual-Function Antennas 5-12

Downloaded from http://www.everyspec.com

Chapter 6. Field Repair and Expedients

Repair Techniques 6-1
- Whip Antennas 6-1
- Wire Antennas 6-2
- Guys 6-4
- Masts 6-4

Tips on Construction and Adjustment 6-4
- Constructing the Antenna 6-4
- Adjusting the Antenna 6-6

Field Expedient Antennas 6-7
- VHF Considerations 6-7
- HF Considerations 6-7
- End-Fed Half-Wave Antenna 6-8
- Center-Fed Doublet Antenna 6-9

Field Expedient Directional Antennas 6-14
- Vertical Half-Rhombic and Long-Wire Antennas 6-14
- Yagi Antenna 6-14
- Vee Antenna 6-16
- Sloping Vee Antenna 6-16

Chapter 7. Satellite Communications Antennas

Siting SATCOM Antennas 7-4
- Considerations 7-4
- Determining Horizon Angles 7-4

Downloaded from http://www.everyspec.com

Chapter 8. Antenna Farms

Command Post 8-1
Tactical 8-1
Main 8-2
Rear 8-2
Location Selection Considerations 8-2
Doctrinal Considerations 8-2
Tactical Considerations 8-3
Technical Considerations 8-5
Siting VHF Antennas 8-6
Transmitting Antenna Site 8-9
Receiving Antenna Sites 8-11
Antenna Farm Internal Arrangement 8-12
Frequency Band 8-12
Antenna Selection and Placement 8-12
Requirements 8-14
Polarization 8-15
Power and Signal Lines 8-16
Antenna Farm Layout Principles 8-16

Appendices

A Glossary A-1
B References and Related Publications B-1

Downloaded from http://www.everyspec.com

Chapter 1

Radio Principles

ELECTROMAGNETIC RADIATION

Electromagnetic radiation includes radio waves, microwaves, infrared radiation, visible light, ultraviolet waves, X-rays, and gamma rays. Together they make up the electromagnetic spectrum. They all move at the speed of light (186,000 miles/300 million meters per second). The only difference between them is their wavelength (the distance a wave travels during one complete cycle [vibration]), which is directly related to the amount of energy the waves carry. The shorter the wavelength, the higher the energy. Figure 1-1 lists the electromagnetic spectrum components according to wavelength and frequency (the number of complete cycles [vibrations] per second). A portion of the spectrum which is used for HF, VHF, and UHF radio communication has been expanded to show more detail.

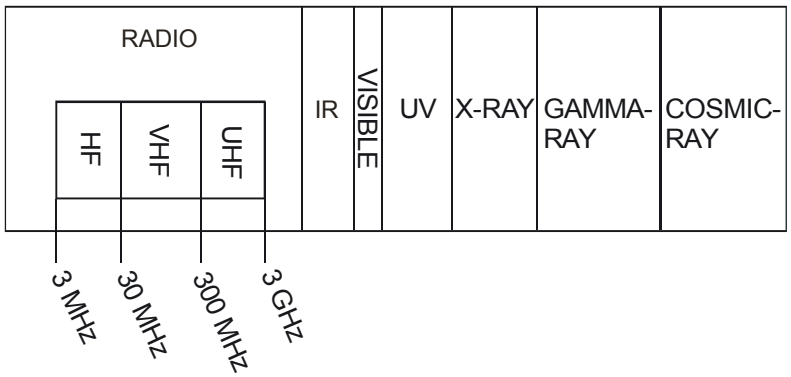

Figure 1-1. Electromagnetic Spectrum.

Downloaded from http://www.everyspec.com

RADIO WAVES

Radio waves propagate (travel) much like surface water waves. They travel near the Earth's surface and also radiate skyward at various angles to the Earth's surface. As the radio waves travel, their energy spreads over an ever-increasing surface area. A typical radio wave has two components, a crest (top portion) and a trough (bottom portion). These components travel outward from the transmitter, one after the other, at a consistent velocity (speed). The distance between successive wave crests is called a wavelength and is commonly represented by the Greek lowercase lambda (λ) (see fig. 1-2).

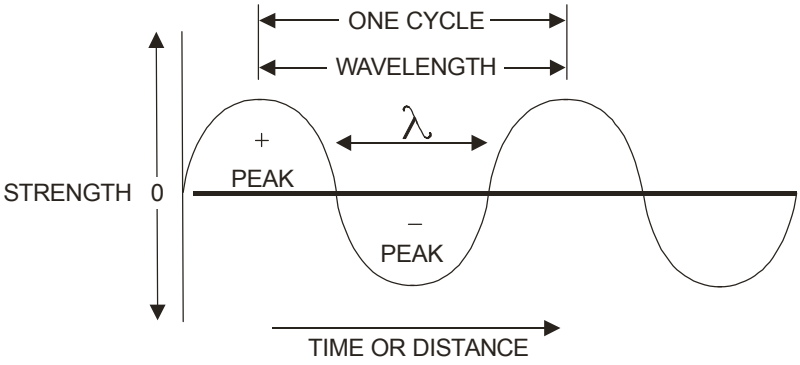

Figure 1-2. Radio Wave.

Frequency

Radio waves transmit radio and television (TV) signals. They have wavelengths that range from less than a centimeter to tens or even hundreds of meters. Frequency modulated (FM) radio waves are shorter than amplitude modulated (AM) radio waves. A radio wave's frequency equals the number of complete cycles that occur in 1 second. The longer the cycle time, the longer the wavelength

Downloaded from http://www.everyspec.com

and the lower the frequency. The shorter the cycle time, the shorter the wavelength and the higher the frequency.

Frequency is measured and stated in hertz (Hz). A radio wave frequency is very high. It is generally measured and stated in thousands of hertz (kilohertz [kHz]), in millions of hertz (megahertz [MHz]), or sometimes in billions of hertz (gigahertz [GHz]).

1 Hz	=	1 cycle per second
1 kHz	=	1 thousand cycles per second
1 MHz	=	1 million cycles per seconds
1 GHz	=	1 billion cycles per second

Frequency Calculation

For practical purposes, the velocity of a radio wave is considered to be constant, regardless of the frequency or the amplitude of the transmitted wave. To find the frequency when the wavelength is known, divide the velocity by the wavelength.

$$\text{Frequency (hertz)} = \frac{300{,}000{,}000 \text{ (meters per second)}}{\text{Wavelength (meters)}}$$

To find the wavelength when the frequency is known, divide the velocity by the frequency.

$$\text{Wavelength (meters)} = \frac{300{,}000{,}000 \text{ (meters per second)}}{\text{Frequency (hertz)}}$$

Frequency Bands

Frequency spectrum designations are—

HF	VHF	UHF
3 to 30 MHz	30 to 300 MHz	300 to 3,000 MHz/3GHz

Downloaded from http://www.everyspec.com

HF is used primarily for long-range communications. An HF signal is reflected by the outermost portion of the atmosphere, the ionosphere. VHF is used for short-range communications. To use VHF, it is necessary to be able to visualize a direct line of sight (LOS) between the transmitter and receiver. This limits UHF to distances that are not much greater than the distance to the horizon, assuming that there are no massive obstructions in the LOS. When the LOS path exists and VHF transmission is possible, VHF is always preferred to HF because a VHF signal can be made to follow a much narrower and more direct path to the receiver. UHF is a third type of transmission. UHF transmission is like VHF in that both follow the direct or LOS path. But with the proper antenna, UHF transmission can be made to follow an even narrower path to the receiver than VHF.

Each frequency band has unique characteristics. The ranges and power requirements shown in table 1-1 are for normal operating conditions (i.e., proper siting and antenna orientation and correct operating procedures). Ranges will change according to the condition of the propagation medium and the transmitter output power.

Table 1-1. Frequency Range Characteristics.

Band	Ground Wave Range	Sky Wave Range	Power Required
HF	0–50 miles	100–8000 miles	.5–5 kW
VHF	0–30 miles	50–150 miles	.5 or less kW
UHF	0–50 miles	N/A	.5 or less kW

Tactical SCRs operate in the three military radio frequency bands shown in table 1-2.

Downloaded from http://www.everyspec.com

Table 1-2. Ground SCRs.

Frequency Band	MAGTF SCR Equipment Used	Operating Frequency Range	Typical Application
HF	AN/PRC-104 AN/GRC-193 AN/MRC-138	2–29.999 MHz	Radio LOS and beyond/long range
VHF	AN/PRC-68 AN/PRC-119 AN/VRC-88 (A, D) AN/VRC-89 (A, D) AN/VRC-90 (A, D) AN/VRC-91 (A, D) AN/VRC-92 (A, D) AN/GRC-213 AN/MRC-145	30–88 MHz	Radio LOS and relay/retransmis-sion
	AN/PRC-113 AN/VRC-83	116–150 MHz	Critical LOS (ground to air)
UHF	AN/PRC-113 AN/VRC-83 AN/GRC-171	225–400 MHz	Critical LOS (ground to air)
	AN/PSC-3 AN/PSC-5		SATCOM footprint

RADIO COMMUNICATION CIRCUIT

The radio equipment for communicating between two stations, including the path the radio signal follows through the air, is a radio link. A radio link consists of seven components: transmitter, power supply, transmission lines, transmitting antenna, propagation path, receiving antenna, and receiver.

Downloaded from http://www.everyspec.com

The transmitter generates a radio signal. The power supply provides power for the operating voltage of the radio (battery or generator). The transmission line delivers the signal from the transmitter to the transmitting antenna. The transmitting antenna sends the radio signal into space toward the receiving antenna. The path in space that the radio signal follows as it goes to the receiving antenna is the propagation path. The receiving antenna intercepts or receives the signal and sends it through a transmission line to the receiver. The receiver processes the radio signal so it can be heard (fig 1-3).

The radio operator's objective is to provide the strongest possible signal to the receiving station. The best possible signal is one that provides the greatest signal-to-noise (S/N) ratio at the receiving antenna.

To implement a radio communications circuit it is necessary to—

- Generate and radiate an electromagnetic wave modulated with information (e.g., voice, Morse code).
- Make the wave propagate efficiently from the transmitting antenna to the receiving antenna.
- Intercept the wave by using a receiving antenna.
- Demodulate the energy so that the information originally transmitted becomes available in a useful form.

Choosing the right antenna and matching its characteristics to the best propagation path are the two most important factors in setting up a communications circuit. The weakest link in the communications circuit is the wrong propagation path. The best transmitter, antenna, and receiver are of little use if the frequency is wrong or the propagation path is improper.

Downloaded from http://www.everyspec.com

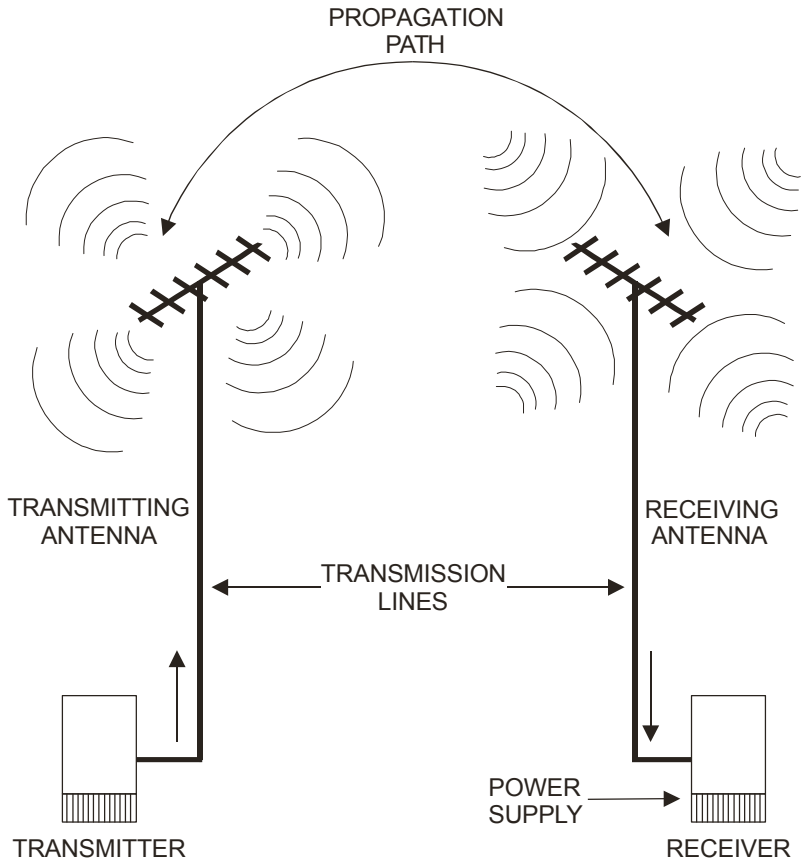

Figure 1-3. Typical Radio Link.

Downloaded from http://www.everyspec.com

PROPAGATION FUNDAMENTALS

Earth's Atmosphere

Propagation usually takes place within the Earth's atmosphere. The atmosphere surrounding the Earth is divided into several layers, each possessing unique characteristics. The first layer, starting at the Earth's surface and extending to a height of about 10 kilometers (km), is the troposphere. In this layer, the air temperature decreases with altitude at the rate of about 2.5°C every 300 meters.

The second layer of the atmosphere is the stratosphere, which occupies an altitude range extending from about 10 km to 50 km. This layer of air remains at a nearly constant temperature of about -65°C.

Beginning at about 50 km and extending upward to more than 500 km is the ionosphere. The ionosphere gets its name because the molecules of its atmosphere are ionized, i.e., electrons have been stripped away from atoms by the constant bombardment of the Sun's rays and other high energy particles released by the Sun. Because of the large quantities of free electrons, the ionosphere is capable of interacting strongly on radio waves traveling through it.

Radio Wave Propagation

There are two principal ways radio waves travel from the transmitter to the receiver. One is by ground wave, directly from the transmitter to the receiver. The other is by sky wave, up to the ionosphere and refracted (bent downward) back to the Earth. Short-distance, all UHF, and upper VHF transmissions are by ground waves. Long-distance transmissions are principally by sky waves. SCR sets can use either ground wave or sky wave propagation for communications.

Downloaded from http://www.everyspec.com

Ground Wave Propagation. Radio communications using ground wave propagation do not use or depend on waves refracted from the ionosphere (sky waves). Ground wave propagation is affected by the Earth's electrical characteristics and by the amount of diffraction (bending) of the waves along the Earth's curvature. The ground wave's strength at the receiver depends on the transmitter's power output and frequency, the Earth's shape and conductivity along the transmission path, and the local weather conditions. The ground wave includes three components: the direct wave, the ground reflected wave, and the surface wave (fig. 1-4).

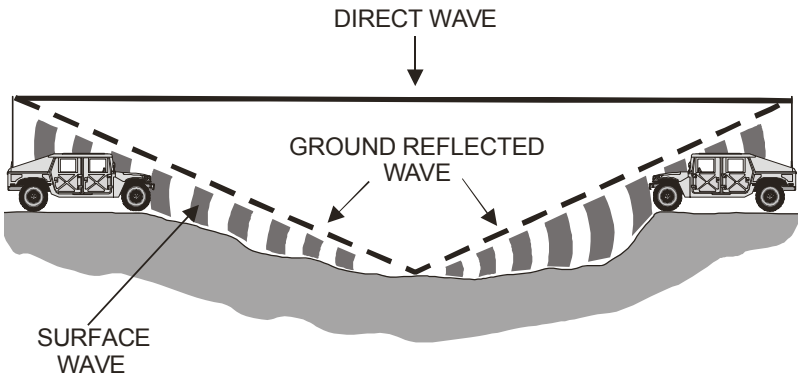

Figure 1-4. Ground Wave.

Direct Wave. The direct wave travels directly from the transmitting antenna to the receiving antenna. The direct wave is limited to the LOS distance between the transmitting antenna and the receiving antenna plus the short distance added by atmospheric refraction and diffraction of the wave around the Earth's curvature. This distance can be extended by increasing the transmitting or the receiving antenna height, or both.

Downloaded from http://www.everyspec.com

Ground Reflected Wave. The ground reflected wave reaches the receiving antenna after being reflected from the Earth's surface. Cancellation of the radio signal can occur when the ground reflected component and the direct wave component arrive at the receiving antenna at the same time and are 180° out of phase with each other.

Surface Wave. The surface wave follows the Earth's curvature. It is affected by the Earth's conductivity and dielectric constant.

Frequency Characteristics Of Ground Waves. Various frequencies determine which wave component will prevail along any given signal path. For example, when the Earth's conductivity is high and the frequency of a radiated signal is low, the surface wave is the predominant component. For frequencies below 10 MHz, the surface wave is sometimes the predominant component. However, above 10 MHz, the losses that are sustained by the surface wave component are so great that the other components (direct wave and sky wave) become predominant.

At frequencies of 30 to 300 kHz, ground losses are very small, so the surface wave component follows the Earth's curvature. It can be used for long-distance communications provided the radio operator has enough power from the transmitter. The frequencies 300 kHz to 3 MHz are used for long-distance communications over sea water and for medium-distance communications over land.

At high frequencies, 3 to 30 MHz, the ground's conductivity is extremely important, especially above 10 MHz where the dielectric constant or conductivity of the Earth's surface determines how much signal absorption occurs. In general, the signal is strongest at the lower frequencies when the surface over which it travels has a high dielectric constant and conductivity.

Downloaded from http://www.everyspec.com

Earth's Surface Conductivity. The dielectric constant or Earth's surface conductivity determines how much of the surface wave signal energy will be absorbed or lost. Although the Earth's surface conductivity as a whole is generally poor, the conductivity of varying surface conditions, when compared one with an other, would be as stated in table 1-3.

Table 1-3. Surface Conductivity.

Surface Type	Relative Conductivity
Large body fresh water	Very good
Ocean or sea water	Good
Flat or hilly loamy soil	Fair
Rocky terrain	Poor
Desert	Poor
Jungle	Very poor

Sky Wave Propagation. Radio communications that use sky wave propagation depend on the ionosphere to provide the signal path between the transmitting and receiving antennas.

Ionospheric Structure. The ionosphere has four distinct layers. In the order of increasing heights and decreasing molecular densities, these layers are D, E, F1, and F2. During the day, when the rays of the Sun are directed toward that portion of the atmosphere, all four layers may be present. At night, the F1 and F2 layers seem to merge into a single F layer, and the D and E layers fade out. The actual number of layers, their height above the Earth, and their relative intensity of ionization vary constantly.

Downloaded from http://www.everyspec.com

The D layer exists only during the day and has little effect in bending the paths of HF radio waves. The main effect of the D layer is to attenuate HF waves when the transmission path is in sunlit regions.

The E layer is used during the day for HF radio transmission over intermediate distances (less than 2,400 km/1,500 miles [mi]). At night the intensity of the E layer decreases, and it becomes useless for radio transmission.

The F layer exists at heights up to 380 km/240 mi above the Earth and is ionized all the time. It has two well-defined layers (F1 and F2) during the day, and one layer (F) at night. At night the F layer remains at a height of about 260 km/170 mi and is useful for long-range radio communications (over 2,400 km/1,500 mi). The F2 layer is the most useful for long-range radio communications, even though its degree of ionization varies appreciably from day to day (fig. 1-5).

The Earth's rotation around the Sun and changes in the Sun's activity contribute to ionospheric variations. There are two main classes of these variations: regular (predictable) and irregular, occuring from abnormal behavior of the Sun.

Regular Ionospheric Variations. The four regular variations are—

- Daily: caused by the rotation of the Earth.
- Seasonal: caused by the north and south progression of the Sun.
- 27-day: caused by the rotation of the Sun on its axis.
- 1-year: caused by the sunspot activity cycle going from maximum through minimum back to maximum levels of intensity.

Downloaded from http://www.everyspec.com

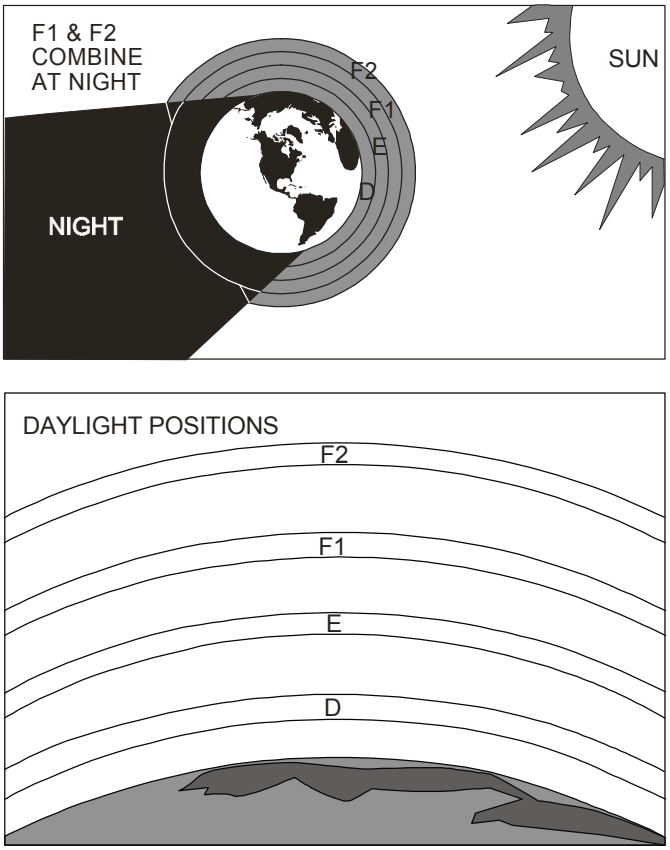

F2 250-500 km (250-420 km at night)
F1 200-250 km
E 90-130 km
D 75-90 km

Figure 1-5. Ionospheric Structure.

Downloaded from http://www.everyspec.com

Irregular Ionospheric Variations. In planning a communications system, the current status of the four regular variations must be anticipated. There are also unpredictable irregular variations that must be considered. They have a degrading effect (at times blanking out communications) which cannot be controlled or compensated for at the present time. Some irregular variations are—

- Sporadic E. When excessively ionized, the E layer often blanks out the reflections from the higher layers. It can also cause unexpected propagation of signals hundreds of miles beyond the normal range. This effect can occur at any time.
- Sudden ionospheric disturbance (SID). A sudden ionospheric disturbance coincides with a bright solar eruption and causes abnormal ionization of the D layer. This effect causes total absorption of all frequencies above approximately 1 MHz. It can occur without warning during daylight hours and can last from a few minutes to several hours. When it occurs, receivers seem to go dead.
- Ionospheric storms. During these storms, sky wave reception above approximately 1.5 MHz shows low intensity and is subject to a type of rapid blasting and fading called flutter fading. These storms may last from several hours to days and usually extend over the entire Earth.

Sunspots. Sunspots generate bursts of radiation that cause high levels of ionization. The more sunspots, the greater the ionization. During periods of low sunspot activity, frequencies above 20 MHz tend to be unusable because the E and F layers are too weakly ionized to reflect signals back to Earth. At the peak of the sunspot cycle, however, it is not unusual to have worldwide propagation on frequencies above 30 MHz.

Downloaded from http://www.everyspec.com

Frequency Characteristics in the Ionosphere. The range of long-distance radio transmission is determined primarily by the ionization density of each layer. The higher the frequency, the greater the ionization density required to reflect radio waves back to Earth. The upper (E and F) layers reflect the higher frequencies because they are the most highly ionized. The D layer, which is the least ionized, does not reflect frequencies above approximately 500 kHz. Thus, at any given time and for each ionized layer, there is an upper frequency limit at which radio waves sent vertically upward are reflected back to Earth. This limit is called the critical frequency.

Radio waves directed vertically at frequencies higher than the critical frequency pass through the ionized layer out into space. All radio waves directed vertically into the ionosphere at frequencies lower than the critical frequency are reflected back to Earth. Radio waves used in communications are generally directed towards the ionosphere at some oblique angle, called the angle of incidence. Radio waves at frequencies above the critical frequency will be reflected back to Earth if transmitted at angles of incidence smaller than a certain angle, called the critical angle. At the critical angle, and at all angles larger than the critical angle, the radio waves pass through the ionosphere if the frequency is higher than the critical frequency. As the angle of transmission decreases, an angle is reached at which the radio waves are reflected back to Earth.

Transmission Paths. Sky wave propagation refers to those types of radio transmissions that depend on the ionosphere to provide signal paths between transmitters and receivers.

The distance from the transmitting antenna to the place where the sky waves first return to Earth is the skip distance. The skip distance depends on the angle of incidence, the operating frequency, and the

Downloaded from http://www.everyspec.com

ionosphere's height and density. The antenna's height, in relation to the operating frequency, affects the angle that transmitted radio waves strike and penetrate the ionosphere and then return to Earth. This angle of incidence can be controlled to obtain the desired coverage area. Lowering the antenna height increases the angle of transmission and provides broad and even signal patterns in a large area.

Using near-vertical transmission paths is known as near-vertical incidence sky wave (NVIS). Raising the antenna height lowers the angle of incidence. Lowering the angle of incidence produces a skip zone in which no usable signal is received. This area is bounded by the outer edge of usable ground wave propagation and the point nearest the antenna at which the sky wave returns to Earth. In short-range communications situations, the skip zone is an undesirable condition. However, low angles of incidence make long-distance communications possible.

When a transmitted wave is reflected back to the Earth's surface, the Earth absorbs part of the energy. The remaining energy is reflected back into the ionosphere to be reflected back again. This means of transmission—alternately reflecting the radio wave between the ionosphere and the Earth—is called hops. Hops enable radio waves to be received at great distances from the point of origin.

Fading. Fading is the periodic increase and decrease of received signal strength. Fading occurs when a radio signal is received over a long-distance path in the high frequency range. The precise origin of this fading is seldom understood. There is little common knowledge of what precautions to take to reduce or eliminate fading's troublesome effects. Fading associated with sky wave paths is the greatest detriment to reliable communications. Too often, those responsible for communication circuits rely on raising the transmitter power or increasing antenna gain to overcome fading. Unfortunately, such actions often do not work and seldom improve

Downloaded from http://www.everyspec.com

reliability. Only when the signal level fades down below the background noise level for an appreciable fraction of time will increased transmitter power or antenna gain yield an overall circuit improvement. Choosing the correct frequency and using transmitting and receiving equipment intelligently ensure a strong and reliable receiving signal, even when low power is used.

Maximum Usable and Lowest Usable Frequencies. Using a given ionized layer and a transmitting antenna with a fixed angle of radiation, there is a maximum frequency at which a radio wave will return to Earth at a given distance. This frequency is called the maximum usable frequency (MUF). It is the monthly median of the daily highest frequency that is predicted for sky wave transmission over a particular path at a particular hour of the day. The MUF is always higher than the critical frequency because the angle of incidence is less than 90°. If the distance between the transmitter and the receiver is increased, the MUF will also increase. Radio waves lose some of their energy through absorption by the D layer and a portion of the E layer at certain transmission frequencies.

The total absorption is less and communications more satisfactory as higher frequencies are used—up to the level of the MUF. The absorption rate is greatest for frequencies ranging from approximately 500 kHz to 2 MHz during the day. At night the absorption rate decreases for all frequencies. As the frequency of transmission over any sky wave path decreases from high to low frequencies, a frequency will be reached at which the received signal overrides the level of atmospheric and other radio noise interference. This is called the lowest useful frequency (LUF) because frequencies lower than the LUF are too weak for useful communications. The LUF depends on the transmitter power output as well as the transmission distance. When the LUF is greater than the MUF, no sky wave transmission is possible.

Downloaded from http://www.everyspec.com

Propagation Prediction. Although a detailed discussion of propagation prediction methods is beyond the scope of this publication, it should be noted that propagation predictions can be obtained from a system planning, engineering, and evaluation device (SPEED).

Other Factors Affecting Propagation

In the VHF and UHF ranges, extending from 30 to 300 MHz and beyond, the presence of objects (e.g., buildings or towers) may produce strong reflections that arrive at the receiving antenna in such a way that they cancel the signal from the desired propagation path and render communications impossible. Most Marines are familiar with distant TV station reception interference caused by high-flying aircraft. The signal bouncing off of the aircraft alternately cancels and reinforces the direct signal from the TV station as the aircraft changes position relative to the transmitting and receiving antennas.

This same interference can adversely affect the ordinary voice communications circuit at VHF and UHF, rendering the received signal unintelligible for brief periods of time. Receiver locations that avoid the proximity of an airfield should be chosen if possible. Avoid locating transmitters and receivers where an airfield is at or near midpoint of the propagation path of frequencies above 20 MHz.

Many other things may affect the propagation of a radio wave. Hills, mountains, buildings, water towers, tall fences, aircraft, and even other antennas can have a marked affect on the condition and reliability of a given propagation path. Conductivity of the local ground or body of water can greatly alter the strength of the transmitted or received signal. Energy radiation from the Sun's surface also greatly affects conditions within the ionosphere and alters the characteristics of long-distance propagation at 2 to 30 MHz.

Downloaded from http://www.everyspec.com

Path Loss

Radio waves become weaker as they spread from the transmitter. The ratio of received power to transmitted power is called path loss. LOS paths at VHF and UHF require relatively little power since the total path loss at the radio horizon is only about 25 decibels (dB) greater than the path loss over the same distance in free space (absence of ground). This additional loss results from some energy being reflected from the ground, canceling part of the direct wave energy. This is unavoidable in almost every practical case. The total path loss for an LOS path above average terrain varies with the following factors: total path loss between transmitting and receiving antenna terminals, frequency, distance, transmitting antenna gain, and receiving antenna gain.

Reflected Waves

Often, it is possible to communicate beyond the normal LOS distance by exploiting the reflection from a tall building, nearby mountain, or water tower (fig. 1-6 on page 1-20). If the top portion of a structure or hill can be seen readily by both transmitting and receiving antennas, it may be possible to achieve practical communications by directing both antennas toward the point of maximum reflection. If the reflecting object is very large in terms of a wavelength, the path loss, including the reflection, can be very low.

If a structure or hill exists adjacent to an LOS path, reflected energy may either add to or subtract from the energy arriving from the direct path. If the reflected energy arrives at the receiving antenna with the same amplitude (strength) as the direct signal but has the opposite phase, both signals will cancel and communication will be impossible. However, if the same condition exists but both signals arrive in phase, they will add and double the signal strength. These

Downloaded from http://www.everyspec.com

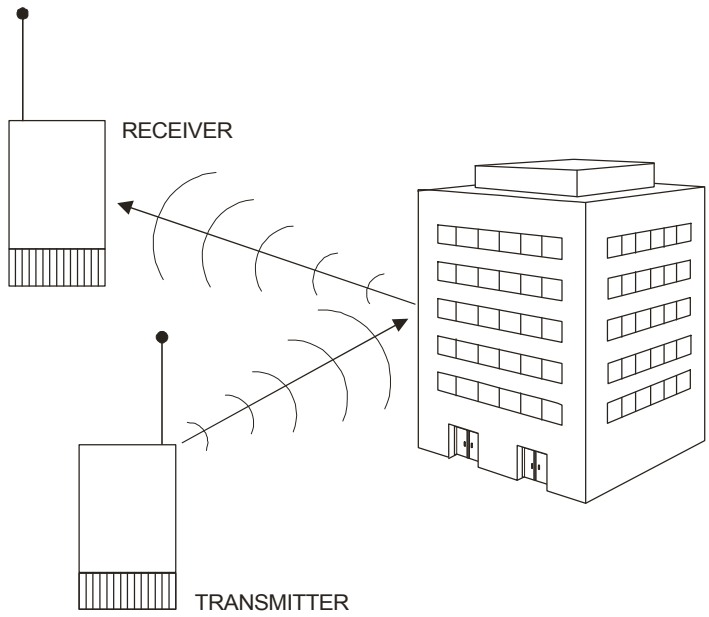

Figure 1-6. Reflected Waves.

two conditions represent destructive and constructive combinations of the reflected and direct waves.

Reflection from the ground at the common midpoint between the receiving and transmitting antennas may also arrive in a constructive or destructive manner. Generally, in the VHF and UHF range, the reflected wave is out of phase (destructive) with respect to the direct wave at vertical angles less than a few degrees above the horizon. However, since the ground is not a perfect conductor, the amplitude of the reflected wave seldom approaches that of the direct wave. Thus, even though the two arrive out of phase, complete cancellation does not occur. Some improvement may result from using vertical polarization rather than horizontal polarization

Downloaded from http://www.everyspec.com

over LOS paths because there tends to be less phase difference between direct and reflected waves. The difference is usually less than 10 dB, however, in favor of vertical polarization.

Diffraction

Unlike the ship passing beyond the visual horizon, a radio wave does not fade out completely when it reaches the radio horizon. A small amount of radio energy travels beyond the radio horizon by a process called diffraction. Diffraction also occurs when a light source is held near an opaque object, casting a shadow on a surface behind it. Near the edge of the shadow a narrow band can be seen which is neither completely light nor dark. The transition from total light to total darkness does not occur abruptly, but changes smoothly as the light is diffracted.

A radio wave passing over either the curved surface of the Earth or a mountain ridge behaves in much the same fashion as a light wave. For example, people living in a valley below a high, sharp, mountain ridge can often receive a TV station located many miles below on the other side. Figure 1-7 illustrates how radio waves from the

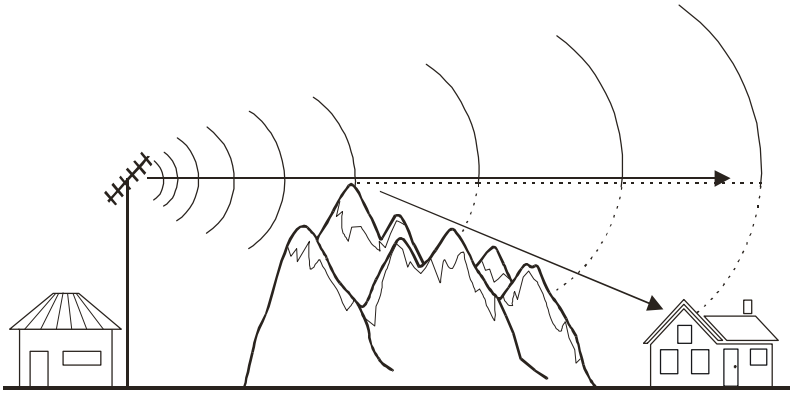

Figure 1-7. Diffracted Wave.

Downloaded from http://www.everyspec.com

TV station are diffracted by the mountain ridge and bent downward in the direction of the village. It is emphasized, however, that the energy decays very rapidly as the angle of propagation departs from the straight LOS path. Typically, a diffracted signal may undergo a reduction of 30 to 40 dB by being bent only 5 feet by a mountain ridge. The actual amount of diffracted signal depends on the shape of the surface, the frequency, the diffraction angle, and many other factors. It is sufficient to say that there are times when the use of diffraction becomes practical as a means for communicating in the VHF and UHF over long distances.

Tropospheric Refraction, Ducting, and Scattering

Refraction is the bending of a wave as it passes through air layers of different density (refractive index). In semitropical regions, a layer of air 5 to 100 meters thick with distinctive characteristics may form close to the ground, usually the result of a temperature inversion. For example, on an unusually warm day after a rainy spell, the Sun may heat up the ground and create a layer of warm, moist air. After sunset, the air a few meters above the ground will cool very rapidly while the moisture in the air close to the ground serves as a blanket for the remaining heat. After a few hours, a sizable difference in temperature may exist between the air near the ground and the air at a height of 10 to 20 meters, resulting in a marked difference in air pressure. Thus, the air near the ground is considerably denser than the air higher up. This condition may exist over an area of several hundred square kilometers or over a long area of land near a seacoast. When such an air mass forms, it usually remains stable until dawn, when the ground begins to cool and the temperature inversion ends.

When a VHF or UHF radio wave is launched within such air mass, it may bend or become *trapped* (forced to follow the inversion layer). This layer then acts as a *duct* between the transmitting

Downloaded from http://www.everyspec.com

antenna and a distant receiving site. The effects of such ducting can be seen frequently during the year in certain locations where TV or VHF FM stations are received over paths of several hundred kilometers. The total path loss within such a *duct* is usually very low and may exceed the free space loss by only a few dBs.

It is also possible to communicate over long distances by means of tropospheric scatter. At altitudes of a few kilometers, the air mass has varying temperature, pressure, and moisture content. Small fluctuations in tropospheric characteristics at high altitude create *blobs*. Within a blob, the temperature, pressure, and humidity are different from the surrounding air. If the difference is large enough, it may modify the refractive index at VHF and UHF. A random distribution of these blobs exists at various altitudes at all times. If a high-power transmitter (greater than 1 kW) and high gain antenna (10 dB or more) are used, sufficient energy may be scattered from these blobs down to the receiver to make reliable communication possible over several hundred kilometers. Communication circuits employing this mode of propagation must use very sensitive receivers and some form of diversity to reduce the effects of the rapid and deep fading. Scatter propagation is usually limited to path distances of less than about 500 km.

NOISE

Noise consists of all undesired radio signals, manmade or natural. Noise masks and degrades useful information reception. The radio signal's strength is of little importance if the signal power is greater than the received noise power. This is why S/N ratio is the most important quantity in a receiving system. Increasing receiver amplification cannot improve the S/N ratio since both signal and noise will be amplified equally and S/N ratio will remain unchanged. Normally, receivers have more than enough amplification.

Downloaded from http://www.everyspec.com

Natural Noise

Natural noise has two principle sources: thunderstorms (atmospheric noise) and stars (galactic noise). Both sources generate sharp pulses of electromagnetic energy over all frequencies. The pulses propagate according to the same laws as manmade signals, and receiving systems must accept them along with the desired signal. Atmospheric noise is dominant from 0 to 5 MHz, and galactic noise is most important at all higher frequencies. Low frequency transmitters must generate very strong signals to overcome noise. Strong signals and strong noise mean that the receiving antenna does not have to be large to collect a usable signal (a few hundred microvolts). A 1.5 meter tuned whip will deliver adequately all of the signals that can be received at frequencies below 1 MHz.

Manmade Noise

Manmade noise is a product of urban civilization that appears wherever electric power is used. It is generated almost anywhere that there is an electric arc (e.g., automobile ignition systems, power lines, motors, arc welders, fluorescent lights). Each source is small, but there are so many that together they can completely hide a weak signal that would be above the natural noise in rural areas. Manmade noise is troublesome when the receiving antenna is near the source, but being near the source gives the noise waves characteristics that can be exploited. Waves near a source tend to be vertically polarized. A horizontally polarized receiving antenna will generally receive less noise than a vertically polarized antenna.

Manmade noise currents are induced by any conductors near the source, including the antenna, transmission line, and equipment cases. If the antenna and transmission line are balanced with respect to the ground, then the noise voltages will be balanced and cancel

Downloaded from http://www.everyspec.com

with respect to the receiver input terminals (zero voltage across terminals), and this noise will not be received. Near-perfect balance is difficult to achieve, but any balance helps.

Other ways to avoid manmade noise are to locate the most troublesome sources and turn them off, or move the receiving system away from them. Moving a kilometer away from a busy street or highway will significantly reduce noise. Although broadband receiving antennas are convenient because they do not have to be tuned to each working frequency, sometimes a narrowband antenna can make the difference between communicating and not communicating. The HF band is now so crowded with users that interference and noise, not signal strength, are the main reasons for poor communications. A narrowband antenna will reject strong interfering signals near the desired frequency and help maintain good communications.

(reverse blank)

Downloaded from http://www.everyspec.com

Chapter 2

Antenna Fundamentals

All radios, whether transmitting or receiving, require some sort of antenna. The antenna accepts power from the transmitter and launches it into space as an electromagnetic or radio wave. At the receiving end of the circuit, a similar antenna collects energy from the passing electromagnetic wave and converts it into an alternating electric current or signal that the receiver can detect.

How well antennas launch and collect electromagnetic waves directly influences communications reliability and quality. The function of an antenna depends on whether it is transmitting or receiving.

A transmitting antenna transforms the output radio frequency (RF) energy produced by a radio transmitter (RF output power) into an electromagnetic field that is radiated through space. The transmitting antenna converts energy from one form to another form. The receiving antenna reverses this process. It transforms the electromagnetic field into RF energy that is delivered to a radio receiver.

Downloaded from http://www.everyspec.com

Section I. Concepts and Terms

To select the right antennas for a radio circuit, certain concepts and terms must be understood. This section defines several basic terms and relationships which will help the reader understand antenna fundamentals. These include: forming a radio wave, radiation fields and patterns, polarization, directionality, resonance, reception, reciprocity, impedance, bandwidth, gain, and take-off angle.

FORMING A RADIO WAVE

When an alternating electric current flows through a conductor (wire), electric and magnetic fields are created around the conductor. If the length of the conductor is very short compared to a wavelength, the electric and magnetic fields will generally die out within a distance of one or two wavelengths. However, as the conductor is lengthened, the intensity of the fields enlarge. Thus, an ever-increasing amount of energy escapes into space. When the length of the wire approaches one-half of a wavelength at the frequency of the applied alternating current, most of the energy will escape in the form of electromagnetic radiation. For effective communications to occur, the following must exist: alternating electric energy in the form of a transmitter, a conductor or a wire, an electric current flowing through the wire, and the generation of both electric and magnetic fields in the space surrounding the wire.

RADIATION

Once a wire is connected to a transmitter and properly grounded, it begins to oscillate electrically, causing the wave to convert nearly all of the transmitter power into an electromagnetic radio wave. The electromagnetic energy is created by the alternating flow of electrons impressed on the bottom end of the wire. The electrons travel

Downloaded from http://www.everyspec.com

upward on the wire to the top, where they have no place to go and are bounced back toward the lower end. As the electrons reach the lower end in phase, i.e., in step with the radio energy then being applied by the transmitter, the energy of their motion is strongly reinforced as they bounce back upward along the wire. This regenerative process sustains the oscillation. The wire is resonant at the frequency at which the source of energy is alternating.

The radio power supplied to a simple wire antenna appears nearly equally distributed throughout its length. The energy stored at any location along the wire is equal to the product of the voltage and the current at that point. If the voltage is high at a given point, the current must be low. If the current is high, the voltage must be low. The electric current is maximum near the bottom end of the wire.

Radiation Fields

When RF power is delivered to an antenna, two fields evolve. One is an induction field, which is associated with the stored energy; the other is a radiation field. At the antenna, the intensities of these fields are large and are proportional to the amount of RF power delivered to the antenna. At a short distance from the antenna and beyond, only the radiation field remains. This field is composed of an electric component and a magnetic component (see fig. 2-1 on page 2-4).

The electric and magnetic fields (components) radiated from an antenna form the electromagnetic field. The electromagnetic field transmits and receives electromagnetic energy through free space. A radio wave is a moving electromagnetic field that has velocity in the direction of travel and components of electric intensity and magnetic intensity arranged at right angles to each other.

Downloaded from http://www.everyspec.com

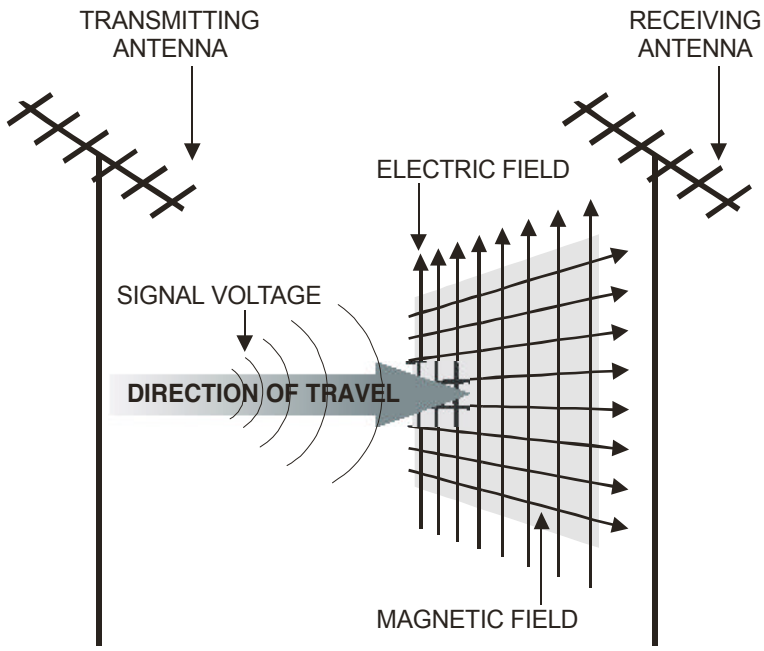

Figure 2-1. Radiation Fields.

Radiation Patterns

The radio signals radiated by an antenna form an electromagnetic field with a definite pattern, depending on the type of antenna used. This radiation pattern shows the antenna's directional characteristics. A vertical antenna radiates energy equally in all directions (omnidirectional), a horizontal antenna is mainly bidirectional, and a unidirectional antenna radiates energy in one direction. However, the patterns are usually distorted by nearby obstructions or terrain features. The full- or solid-radiation pattern is represented as a three-dimensional figure that looks somewhat like a doughnut with a transmitting antenna in the center (fig 2-2).

Downloaded from http://www.everyspec.com

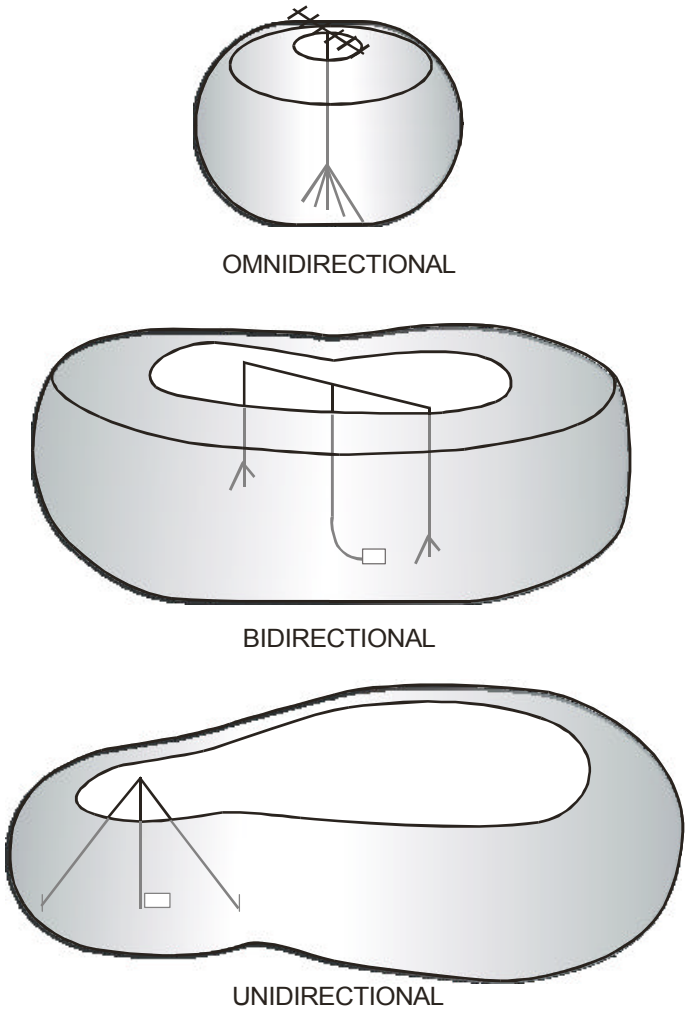

Figure 2-2. Radiation Patterns.

Downloaded from http://www.everyspec.com

POLARIZATION

A radiated wave's polarization is determined by the direction of the lines of force making up the electric field. If the lines of electric force are at right angles to the Earth's surface, the wave is vertically polarized (fig. 2-3). If the lines of electric force are parallel to the Earth's surface, the wave is horizontally polarized (fig. 2-4). When a single-wire antenna extracts (receives) energy from a passing

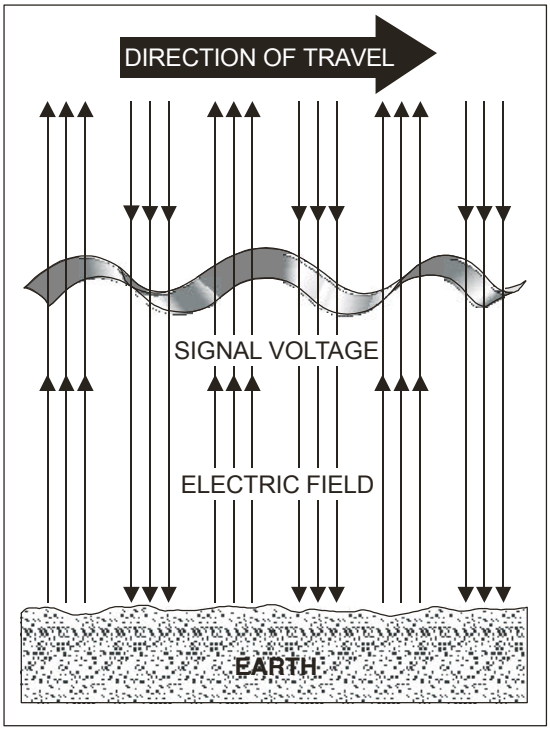

Figure 2-3. Vertical Polarization.

Downloaded from http://www.everyspec.com

radio wave, maximum pickup results if the antenna is oriented in the same direction as the electric field component. A vertical antenna receives vertically polarized waves, and a horizontal antenna receives horizontally polarized waves. If the field rotates as the waves travel through space, both horizontal and vertical components of the field exist, and the wave is elliptically polarized.

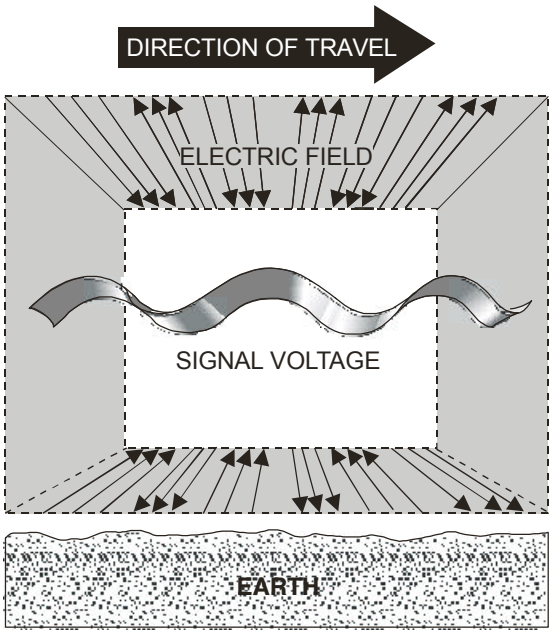

Figure 2-4. Horizontal Polarization.

Downloaded from http://www.everyspec.com

Polarization Requirements for Various Frequencies

At medium and low frequencies, ground wave transmission is used extensively, and it is necessary to use vertical polarization. Vertical lines of force are perpendicular to the ground, and the radio wave can travel a considerable distance along the ground surface with a minimum amount of loss. Because the Earth acts as a relatively good conductor at low frequencies, horizontal lines of electric force are shorted out, and the useful range with the horizontal polarization is limited.

At high frequencies, with sky wave transmission, it makes little difference whether horizontal or vertical polarization is used. The sky wave, after being reflected by the ionosphere, arrives at the receiving antenna elliptically polarized. Therefore, the transmitting and receiving antennas can be mounted either horizontally or vertically. Horizontal antennas are preferred, since they can be made to radiate effectively at high angles and have inherent directional properties.

For frequencies in the VHF or UHF range, either horizontal or vertical polarization is satisfactory. Since the radio wave travels directly from the transmitting antenna to the receiving antenna, the original polarization produced at the transmitting antenna is maintained as the wave travels to the receiving antenna. If a horizontal antenna is used for transmitting, a horizontal antenna must be used for receiving.

Satellites and satellite terminals use circular polarization. Circular polarization describes a wave whose plane of polarization rotates through 360° as it progresses forward. The rotation can be clockwise or counterclockwise (see fig. 2-5). Circular polarization occurs when equal magnitudes of vertically and horizontally polarized waves are combined with a phase difference of 90°. Rotation in one direction or the other depends on the phase relationship.

Downloaded from http://www.everyspec.com

Advantages of Vertical Polarization

Simple vertical half-wave and quarter-wave antennas provide omnidirectional communications. This is desirable in communicating with a moving vehicle. The disadvantage is that it radiates equally to the enemy and friendly forces.

When antenna heights are limited to 3.05 meters (10 feet) or less over land, as in a vehicular installation, vertical polarization provides a stronger received signal at frequencies up to about 50 MHz. From about 50 to 100 MHz, there is only a slight improvement over horizontal polarization with antennas at the same height. Above 100 MHz, the difference in signal strength between vertical and horizontal polarization is small. However, when antennas are located near dense forests, horizontally polarized waves suffer lower losses than vertically polarized waves.

Vertically polarized radiation is somewhat less affected by reflections from aircraft flying over the transmission path. With horizontal polarization, such reflections cause variations in received signal

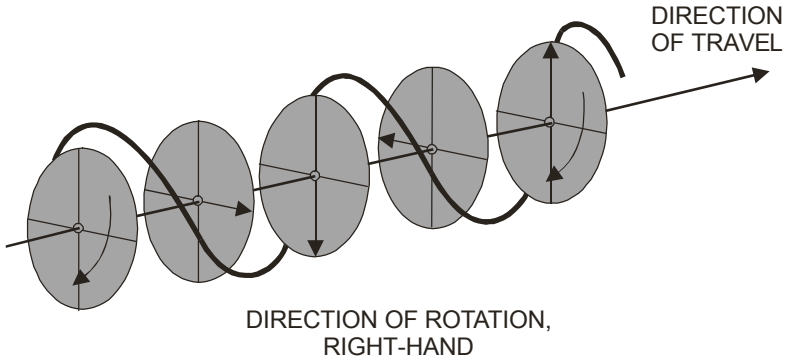

Figure 2-5. Circular Polarization.

Downloaded from http://www.everyspec.com

strength. An example is the picture flutter in a television set when an aircraft interferes with the transmission path. This factor is important in areas where aircraft traffic is heavy.

When vertical polarization is used, less interference is produced or picked up from strong VHF and UHF transmissions (TV and FM broadcasts) because they use horizontal polarization. This factor is important when an antenna must be located in an urban area that has TV or FM broadcast stations.

Advantages of Horizontal Polarization

A simple horizontal half-wave antenna is bidirectional. This characteristic is useful in minimizing interference from certain directions.

Horizontal antennas are less likely to pick up manmade interference, which is ordinarily vertically polarized. When antennas are located near dense forests, horizontally polarized waves suffer lower losses than vertically polarized waves, especially above 100 MHz. Small changes in antenna location do not cause large variations in the field intensity of horizontally polarized waves when an antenna is located among trees or buildings. When vertical polarization is used, a change of only a few feet in the antenna location may have a significant effect on the received signal strength.

DIRECTIONALITY

Vertical receiving antennas accept radio signals equally from all horizontal directions, just as vertical transmitting antennas radiate equally in all horizontal directions. Because of this characteristic, other stations operating on the same or nearby frequencies may interfere with the desired signal and make reception difficult or

Downloaded from http://www.everyspec.com

impossible. However, reception of a desired signal can be improved by using directional antennas.

Horizontal half-wave antennas accept radio signals from all directions. The strongest reception is received in a line perpendicular to the antenna (i.e., broadside, and the weakest reception is received from the direction of the ends of the antenna). Interfering signals can be eliminated or reduced by changing the antenna installation so that either end of the antenna points directly at the interfering station.

Communications over a radio circuit is satisfactory when the received signal is strong enough to override undesired signals and noise. The receiver must be within range of the transmitter. Increasing the transmitting power between two radio stations increases communications effectiveness. Also, changing the types of transmission, changing to a frequency that is not readily absorbed, or using a directional antenna aids in communications effectiveness.

Directional transmitting antennas concentrate radiation in a given direction and minimize radiation in other directions. A directional antenna may also be used to lessen interception by the enemy and interference with friendly stations.

RESONANCE

Antennas can be classified as either resonant or nonresonant, depending on their design. In a resonant antenna, almost all of the radio signal fed to the antenna is radiated. If the antenna is fed with a frequency other than the one for which it is resonant, much of the fed signal will be lost and will not be radiated. A resonant antenna will effectively radiate a radio signal for frequencies close to its design frequency (usually only 2 percent above or below the design

Downloaded from http://www.everyspec.com

frequency). If a resonant antenna is used for a radio circuit, a separate antenna must be built for each frequency to be used on the radio circuit. A nonresonant antenna, on the other hand, will effectively radiate a broad range of frequencies with less efficiency. Resonant and nonresonant antennas are commonly used on tactical circuits. Resonance can be achieved in two ways: physically matching the length of the antenna to the wave and electronically matching the length of the antenna to the wave.

RECEPTION

The radio waves that leave the transmitting antenna will have an influence on and will be influenced by any electrons in their path. For example, as an HF wave enters the ionosphere, it is reflected or refracted back to earth by the action of free electrons in this region of the atmosphere. When the radio wave encounters the wire or metallic conductors of the receiving antenna, the radio wave's electric field will cause the electrons in the antenna to oscillate back and forth in step with the wave as it passes. The movement of these electrons within the antenna is the small alternating electrical current which is detected by the radio receiver.

When radio waves encounter electrons which are free to move under the influence of the wave's electric field, the free electrons oscillate in sympathy with the wave. This generates electric currents which then create waves of their own. These new waves are reflected or scattered waves. This process is electromagnetic scattering. All materials that are good electrical conductors reflect or scatter RF energy. Since a receiving antenna is a good conductor, it too acts as a scatterer. Only a portion of the energy which comes in contact with the antenna is converted into received electrical power; a sizable portion of the total power is re-radiated by the wire.

Downloaded from http://www.everyspec.com

If an antenna is located within a congested urban environment or within a building, there are many objects which will scatter or reraditate the energy in a manner that can be detrimental to reception. For example, the electric wiring inside a building can strongly reradiate RF energy. If a receiving antenna is in close proximity to wires, it is possible for the reflected energy to cancel the energy received directly from the desired signal path. When this condition exists, the receiving antenna should be moved to another location within the room where the reflected and direct signals may reinforce rather than cancel each other.

RECIPROCITY

The various properties of an antenna apply equally, regardless of whether the antenna is used for transmitting or receiving. This is what is meant by reciprocity of antennas. For example, the more efficient a certain antenna is for transmitting, the more efficient it will be for receiving the same frequency. The directive properties of a given antenna will be the same whether it is used for transmission or reception.

For example, figure 2-6 on page 2-14 shows a particular antenna used with a transmitter radiating a maximum amount of energy at right angles to the antenna wire. There is a minimum amount of radiation along the axis of the antenna. If this same antenna is used as a receiving antenna, it receives best in the same directions in which it produced maximum radiation (i.e., at right angles to the axis of the antenna). There is a minimum amount of signal received from transmitters located in line with the antenna wire.

Downloaded from http://www.everyspec.com

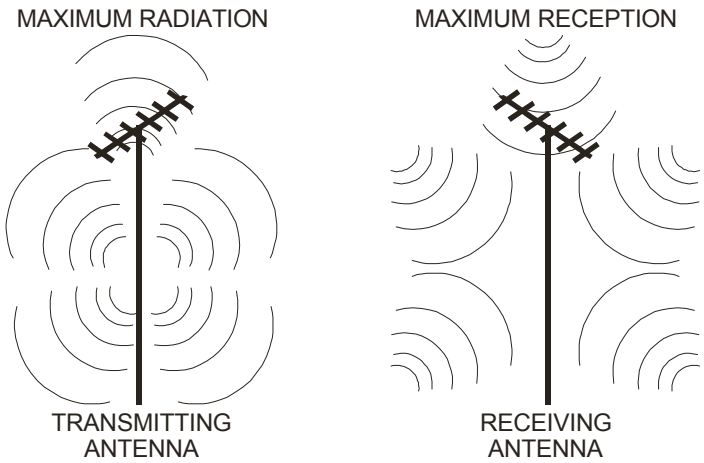

Figure 2-6. Reciprocity.

IMPEDANCE

Impedance is the relationship between voltage and current at any point in an alternating current circuit. The impedance of an antenna is equal to the ratio of the voltage to the current at the point on the antenna where the feed is connected (feed point). If the feed point is located at a point of maximum current, the antenna impedance is 20 to 100 ohms. If the feed point is moved to a maximum voltage point, the impedance is as much as 500 to 10,000 ohms.

The input impedance of an antenna depends on the conductivity or impedance of the ground. For example, if the ground is a simple stake driven about a meter into earth of average conductivity, the impedance of the monopole may be double or even triple the quoted values. Because this additional resistance occurs at a point on the antenna circuit where the current is high, a large amount of

Downloaded from http://www.everyspec.com

transmitter power will dissipate as heat into the ground rather than radiated as intended. Therefore, it is essential to provide as good a ground or artificial ground (counterpoise) connection as possible when using a vertical whip or monopole.

The amount of power an antenna radiates depends on the amount of current which flows in it. Maximum power is radiated when there is maximum current flowing. Maximum current flows when the impedance is minimized—when the antenna is resonated so that its impedance is pure resistance. (When capacitive reactance is made equal to inductive reactance, they cancel each other, and impedance equals pure resistance.)

BANDWIDTH

The bandwidth of an antenna is that frequency range over which it will perform within certain specified limits. These limits are with respect to impedance match, gain, and/or radiation pattern characteristics. Typical specification limits are—

- An impedance mismatch of less than 2:1 relative to some standard impedance such as 50 ohms.
- A loss in gain or efficiency of no more than 3 dB.
- A directivity pattern whose main beam is 13 dB greater than any of the side lobes, and a back lobe at least 15 dB below the main beam.
- Bandwidth is measured by changing the frequency of a constant-strength test signal above and below center frequency and measuring power output. The high and low frequencies, where power is one-half (-3 dB) of what it was at center, define the bandwidth. It is expressed as frequency (high minus low) or in percentage (high-low/center x 100%).

Downloaded from http://www.everyspec.com

In the radio communication process, intelligence changes from speech or writing into a low frequency signal that is used to modulate, or cause change, in a much higher frequency radio signal. When transmitted by an antenna, these radio signals carry the intelligence to the receiving antenna, where it is picked up and reconverted into the original speech or writing. There are natural laws which limit the amount of intelligence or signal that can be transmitted and received at a given time. The more words per minute, the higher the rate and the modulation frequency, so a wider or greater bandwidth is needed. To transmit and receive all the intelligence necessary, the antenna bandwidth must be as wide or wider than the signal bandwidth, otherwise it will limit the signal frequencies, causing voices and writing to be unintelligible. Too wide a bandwidth is also bad, since it accepts extra voices and will degrade the S/N ratio. Figure 2-7 shows how signal bandwidth is defined and gives some examples of bandwidth required to transmit ordinary types of intelligence.

GAIN

The antenna's gain depends on its design. Transmitting antennas are designed for high efficiency in radiating energy, and receiving antennas are designed for high efficiency in picking up (gaining) energy. On many radio circuits, transmission is required between a transmitter and only one receiving station. Energy is radiated in one direction because it is useful only in that direction. Directional receiving antennas increase the energy gain in the favored direction and reduce the reception of unwanted noise and signals from other directions. Transmitting and receiving antennas should have small energy losses and should be efficient as radiators and receptors.

Downloaded from http://www.everyspec.com

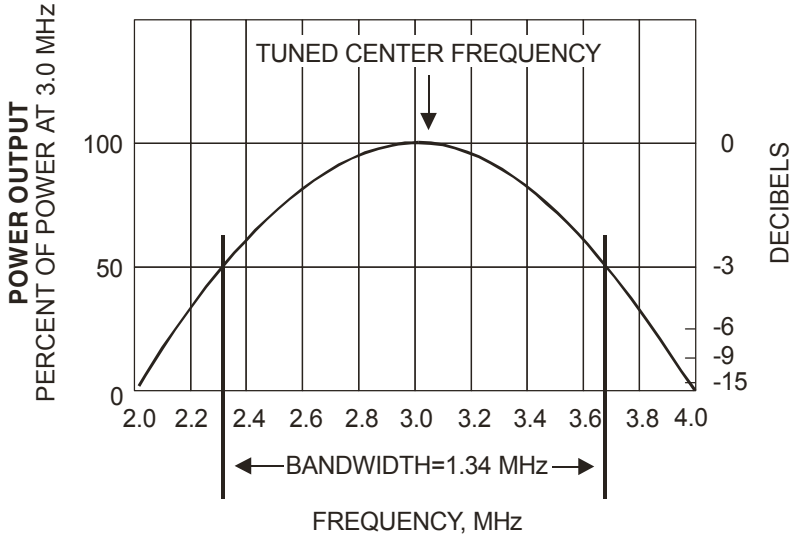

INTELLIGENCE	BANDWIDTH
Voice, AM	6.0 KHz
Voice, FM	46.0 KHz
One microsecond pulses	10,000.0 KHz

Bandwidths necessary to transmit and receive some ordinary kinds of intelligence

Figure 2-7. Bandwidth.

Downloaded from http://www.everyspec.com

TAKE-OFF ANGLE

The antenna's take-off angle is the angle above the horizon that an antenna radiates the largest amount of energy (see fig. 2-8). VHF communications antennas are designed so that the energy is radiated parallel to the Earth (do not confuse take-off angle and polarization). The take-off angle of an HF communications antenna can determine whether a circuit is successful or not. HF sky wave antennas are designed for specific take-off angles, depending on the circuit distance. High take-off angles are used for short-range communications, and low take-off angles are used for long-range communications.

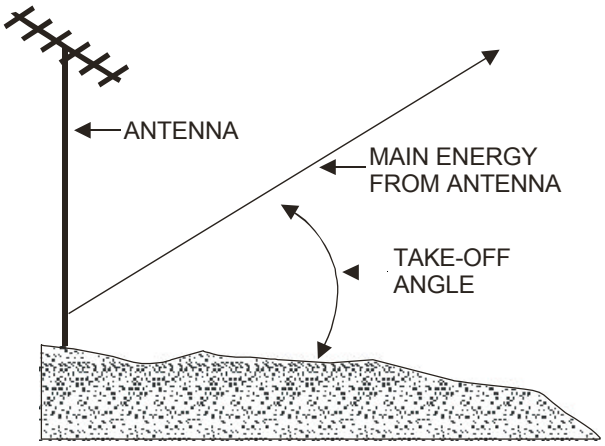

Figure 2-8. Take-Off Angle.

Downloaded from http://www.everyspec.com

Section II. Ground Effects

Since most tactical antennas are erected over the Earth and not out in free space, except for those on satellites, the ground will alter the free space radiation patterns of antennas. The ground will also affect some of the electrical characteristics of an antenna. It has the greatest effect on those antennas that must be mounted relatively close to the ground in terms of wavelength. For example, medium- and high-frequency antennas, elevated above the ground by only a fraction of a wavelength, will have radiation patterns that are quite different from the free-space patterns.

GROUNDED ANTENNA THEORY

The ground is a good conductor for medium and low frequencies and acts as a large mirror for the radiated energy. The ground reflects a large amount of energy that is radiated downward from an antenna mounted over it. Using this characteristic of the ground, an antenna only a quarter-wavelength long can be made into the equivalent of a half-wave antenna. A quarter-wave antenna erected vertically, with its lower end connected electrically to the ground (fig. 2-9 on page 2-20), behaves like a half-wave antenna. The ground takes the place of the missing quarter-wavelength, and the reflections supply that part of the radiated energy that normally would be supplied by the lower half of an ungrounded half-wave antenna.

Downloaded from http://www.everyspec.com

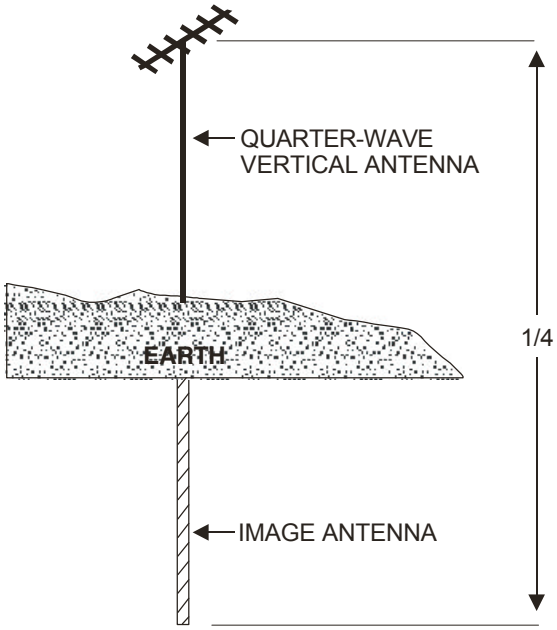

Figure 2-9. Quarter-Wave Antenna Connected to Ground.

TYPES OF GROUNDS

When grounded antennas are used, it is especially important that the ground has as high a conductivity as possible. This reduces ground losses and provides the best possible reflecting surface for the down-going radiated energy from the antenna. At low and medium frequencies, the ground acts as a good conductor. The ground connection must be made in such a way as to introduce the least possible amount of resistance to ground. At higher frequencies, artificial grounds constructed of large metal surfaces are common.

Downloaded from http://www.everyspec.com

The ground connections take many forms, depending on the type of installation and the loss that can be tolerated. In many simple field installations, the ground connection is made by one or more metal rods driven into the soil. Where more satisfactory arrangements cannot be made, ground leads can be connected to existing devices which are grounded. Metal structures or underground pipe systems are commonly used as ground connections. In an emergency, a ground connection can be made by forcing one or more bayonets into the soil.

When an antenna must be erected over soil with low conductivity, treat the soil to reduce resistance. Treat the soil with substances that are highly conductive when in solution. Some of these substances, listed in order of preference, are sodium chloride (common salt), calcium chloride, copper sulfate (blue vitriol), magnesium sulfate (Epsom salt), and potassium nitrate (saltpeter). The amount required depends on the type of soil and its moisture content.

WARNING

WHEN THESE SUBSTANCES ARE USED, IT IS IMPORTANT THAT THEY DO NOT GET INTO NEARBY DRINKING WATER SUPPLIES.

For simple installations in the field, a single ground rod can be fabricated from pipe or conduit. It is important that a low resistance connection be made between the ground wire and the ground rod. The rod should be cleaned thoroughly by scraping and sandpapering at the point where the connection is to be made, and a clean ground clamp should be installed. A ground wire can then be soldered or joined to the clamp. This joint should be covered with tape to prevent an increase in resistance because of oxidation.

Downloaded from http://www.everyspec.com

Counterpoise

When an actual ground connection cannot be used because of the high resistance of the soil or because a large buried ground system is not practical, a counterpoise may be used to replace the usual direct ground connection. The counterpoise (fig. 2-10) consists of a device made of wire, which is erected a short distance above the ground and insulated from it. The size of the counterpoise should be at least equal to or larger than the size of the antenna.

When the antenna is mounted vertically, the counterpoise should be made into a simple geometric pattern. Perfect symmetry is not required. The counterpoise appears to the antenna as an artificial ground that helps to produce the required radiation pattern.

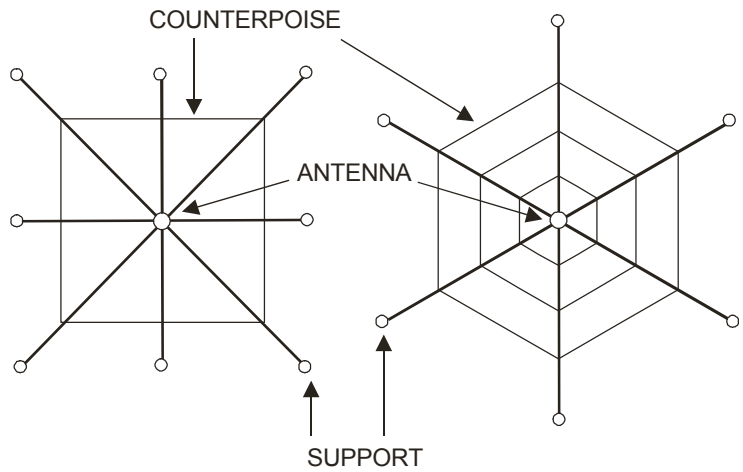

Figure 2-10. Wire Counterpoise.

Downloaded from http://www.everyspec.com

In some VHF antenna installations on vehicles, the metal roof of the vehicle (or shelter) is used as a counterpoise for the antenna. Small counterpoises of metal mesh are sometimes used with special VHF antennas that must be located a considerable distance above the ground.

Ground Screen

A ground screen consists of a fairly large area of metal mesh or screen that is laid on the surface of the ground under the antenna. There are two specific advantages to using ground screens. First, the ground screen reduces ground absorption losses that occur when an antenna is erected over ground with poor conductivity. Second, the height of the antenna can be set accurately, and the radiation resistance of the antenna can be determined more accurately.

Downloaded from http://www.everyspec.com

Section III. Calculating Antenna Length

An antenna's length must be considered in two ways: physical and electrical. The two are never the same. The reduced velocity of the wave on the antenna and a capacitive effect (end effect) make the antenna seem longer electrically than physically. The contributing factors are the ratio of the diameter of the antenna to its length and the capacitive effect of terminal equipment (e.g., insulators or clamps) used to support the antenna.

To calculate the antenna's physical length, use a correction of 0.95 for frequencies between 3 and 50 MHz. The figures given are for a half-wave antenna.

$$\text{Length (meters)} = \frac{150 \times 0.95}{\text{Frequency in MHz}} = \frac{142.50}{\text{Frequency in MHz}}$$

$$\text{Length (feet)} = \frac{492 \times 0.95}{\text{Frequency in MHz}} = \frac{468}{\text{Frequency in MHz}}$$

The length of a long-wire antenna (one wavelength or longer) for harmonic operation is calculated by using the following formula, where N = number of half-wavelengths in the total length of the antenna.

$$\text{Length (meters)} = \frac{150\ (N - 0.05)}{\text{Frequency in MHz}}$$

$$\text{Length (feet)} = \frac{492\ (N - 0.05)}{\text{Frequency in MHz}}$$

Downloaded from http://www.everyspec.com

Example: 3 half-wavelengths at 7 MHz is—

$$\text{Length (meters)} = \frac{150\ (N - 0.05)}{\text{Frequency in MHz}}$$

$$= \frac{150\ (3 - .05)}{7}$$

$$= \frac{150 \times 2.95}{7}$$

$$= \frac{442.50}{7}$$

$$= 63.2 \text{ meters}$$

Downloaded from http://www.everyspec.com

Section IV. Antenna Orientation

The orientation of an antenna is extremely important. Determining the position of an antenna in relation to the points of the compass can make the difference between a marginal and good radio circuit.

AZIMUTH

If the azimuth of the radio's path is not provided, determine it by the best available means. The accuracy required depends on the radiation pattern of the directional antenna. If the antenna beamwidth is very wide (e.g., 90° angle between half-power points) an error of

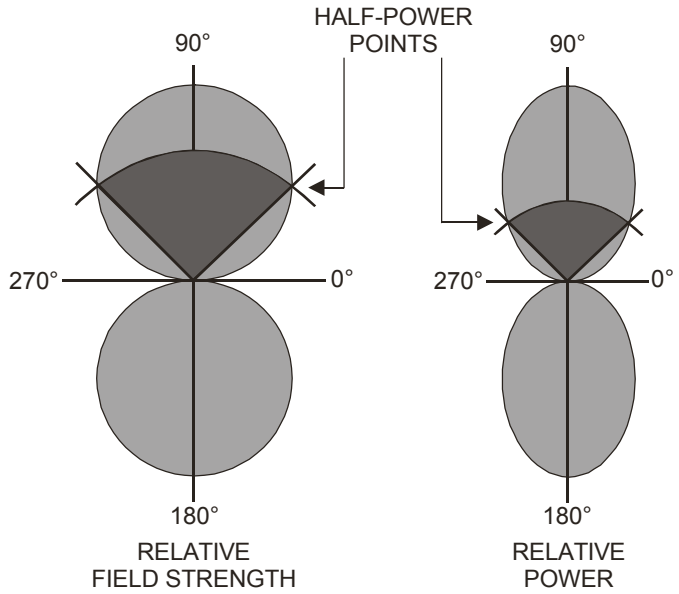

Figure 2-11. Beamwidth Measured on Relative Field Strength and Relative Power Patterns.

Downloaded from http://www.everyspec.com

10° is of little consequence. In transportable operation, the rhombic and vee antennas may have such a narrow beam that great accuracy is required to determine azimuth. The antenna should be erected for the correct azimuth. Great accuracy is not required to erect broad-beam antennas.

Unless a line of known azimuth is available at the site, the direction of the path is best determined by a magnetic compass. Figure 2-12 on page 2-28 is a map of magnetic declination, showing the variation of the compass needle from the true north. When the compass is held so that the needle points to the direction indicated for the location on the map, all directions indicated by the compass will be true.

Improvement of Marginal Communications

It may not always be feasible to orient directional antennas to the correct azimuth of the desired radio path, and marginal communications may suffer. To improve marginal communications—

- Check, tighten, and tape cable couplings and connections.
- Retune all transmitters and receivers in the circuit.
- Check that the antennas are adjusted for proper operating frequency.
- Change the heights of antennas.
- Move the antenna a short distance away and in different locations from its original location.
- Separate transmitters from receiving equipment, if feasible.

Downloaded from http://www.everyspec.com

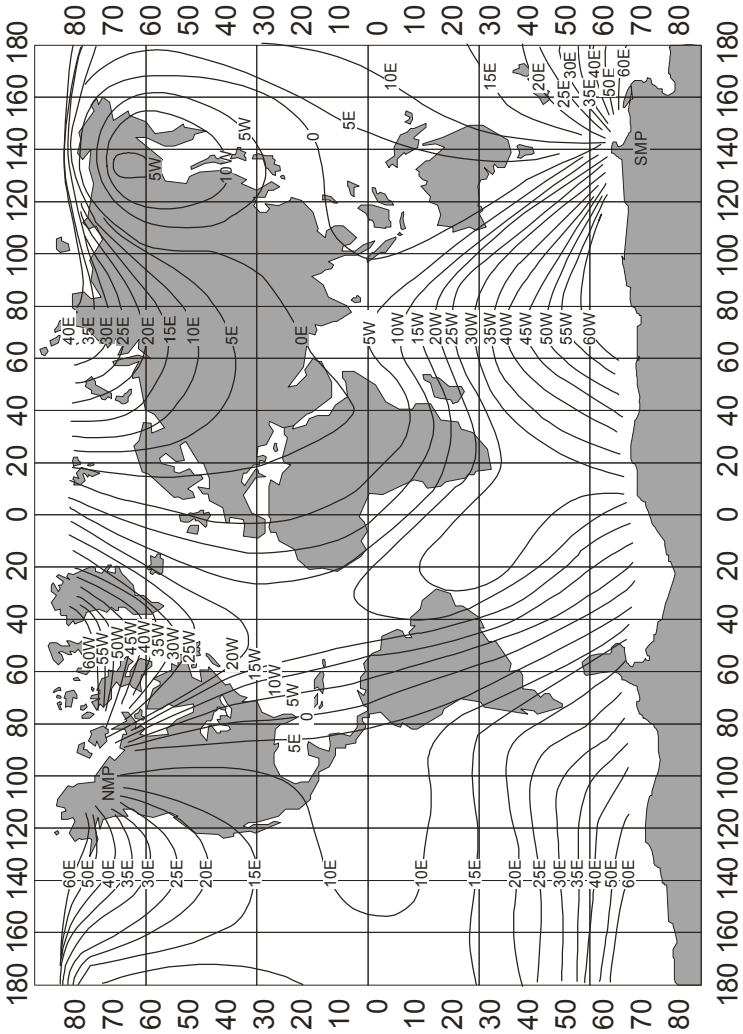

Figure 2-12. Magnetic Declination Over the World.

Downloaded from http://www.everyspec.com

Transmission and Reception of Strong Signals

After an adequate site has been selected and the proper antenna orientation obtained, the signal level at the receiver will be proportional to the strength of the transmitted signal.

WARNING

EXCESSIVE SIGNAL STRENGTH MAY RESULT IN ENEMY INTERCEPT AND INTERFERENCE OR IN YOUR INTERFERENCE WITH ADJACENT FREQUENCIES.

If a high-gain antenna is used, a stronger signal can be obtained. Losses between the antenna and the equipment can be reduced by using a high quality transmission line, as short as possible, and properly matched at both ends.

WARNING

BE EXTREMELY CAREFUL WHEN PUTTING UP, TAKING DOWN, OR MOVING ANTENNAS LOCATED NEAR HIGH VOLTAGE OR COMMECIAL POWER LINES. ANTENNA CONTACT WITH THESE CAN AND MAY RESULT IN ELECTROCUTION OR SEVERE INJURY TO PERSONNEL HOLDING THE ANTENNA OR THE CONNECTING GUY WIRES AND CABLES.

Downloaded from http://www.everyspec.com

Chapter 3

Transmission Lines

Transmission lines (antenna feed lines) conduct or guide electrical energy from the transmitter to the receiver. This chapter is oriented primarily toward transmission lines with field expedient antennas. For standard issue radios and antennas, use the issued coaxial cable. As long as radios, cables, and antennas are maintained in working order, they will operate as designed and won't require any adjustments or changes based on the information in this chapter.

PROPERTIES

Transmission Line Types

Transmission lines are classified according to construction and length, and fall into two main categories: balanced line and unbalanced line. The terms balanced and unbalanced describe the relationship between transmission line conductors and the Earth. Transmission lines may be classified as resonant or nonresonant lines, each of which may have advantages over the other under a given set of circumstances.

Balanced Line. A balanced line is composed of two identical conductors, usually circular wires, separated by air or an insulating material (dielectric). The voltages between each conductor and ground produced by an RF wave as it moves down a balanced line,

Downloaded from http://www.everyspec.com

are equal and opposite (i.e. at the moment one of the conductors supports a positive voltage with respect to ground, the other supports a negative voltage of equal magnitude). Some balanced lines carry a third conductor in the form of a braided shield, which acts as ground. Conductor spacings up to several centimeters are commonly used. Figure 3-1 shows balanced and unbalanced lines.

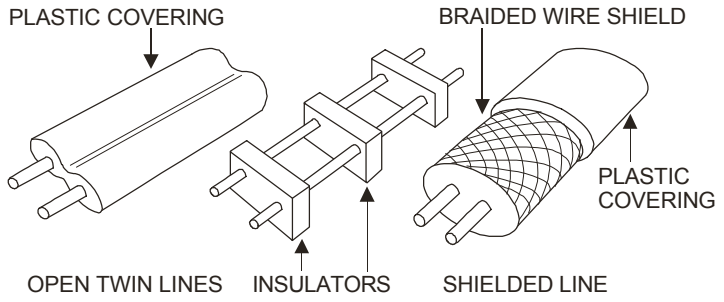

BALANCED TRANSMISSION LINES

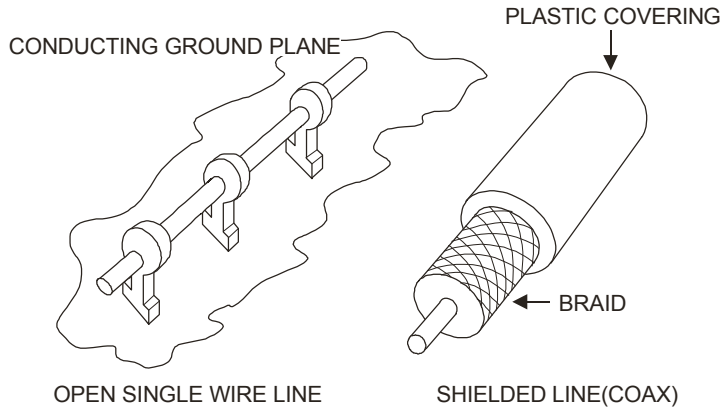

UNBALANCED TRANSMISSION LINES

Figure 3-1. Balanced and Unbalanced Transmission Lines.

Downloaded from http://www.everyspec.com

Unbalanced Line. The unbalanced line is usually open single-wire line or coaxial cable. It is one-half of a balanced line.

Nonresonant Line. A nonresonant line is a line that has no standing waves of current and voltage. It is either infinitely long or is terminated in its characteristic impedance. Because there are no reflections, all of the energy passed along the line is absorbed by the load (except for the small amount of energy dissipated by the line).

Resonant Line. A resonant transmission line has standing waves of current and voltage. The line is of finite length and is not terminated in its characteristic impedance. Reflections are present. A resonant line, like a tuned circuit, is resonant at some particular frequency. The resonant line will present to its source of energy a high or a low resistive impedance at multiples of a quarter-wavelength. Whether the impedance is high or low at these points depends on whether the line is short- or open-circuited at the output end. At points that are not exact multiples of a quarter-wavelength, the line acts as a capacitor or an inductor.

MINIMIZING ENERGY LOSS

To communicate with minimal energy loss, elements such as impedance matching and attenuation (line losses) must be considered.

Impedance

Currents and waves cannot move from place to place without some dissipation; their flow is impeded. Impedance describes the nature and size of whatever impedes their flow. Impedance is an important consideration in selecting the proper transmission line.

Downloaded from http://www.everyspec.com

A radio wave consists of electric and magnetic fields arranged perpendicularly to each other and to the direction the wave travels. The impedance associated with this wave is the ratio of the potential difference (voltage) to the current (amperage) at a given point along a transmission line. The following formula illustrates this.

$$\frac{\text{Voltage}}{\text{Current}} = \text{Impedance}$$

In transmission lines, because of the length-frequency relationship, the characteristic impedance is more often discussed in terms of capacitance and inductance. In conventional circuits that contain inductors and capacitors, the inductance and capacitance are present in definite lumps. In an RF transmission line, however, these quantities are distributed throughout the entire line and cannot be separated from each other.

If a transmitter is connected to a transmission line that is terminated in a load whose impedance is different from that of the line, only a portion of the available energy will be accepted by the load antenna, and the remainder will be reflected back down the line in the direction of the transmitter. The energy is actually traveling in both directions along the line.

If a transmitter is connected to a transmission line terminated in a load whose impedance exactly equals the impedance of the line, the line will absorb all of the energy except for that lost in the resistive and dielectric losses of the line. Current flowing through the line will be uniformly distributed along its length, and the voltage between the conductors on the line will be equal at all points. When this condition exists, the line is said to be perfectly matched and carries only a forward or incident wave. If the impedance of the transmission line and the load also equal the internal impedance (output impedance) of the transmitter, a maximum transfer of

Downloaded from http://www.everyspec.com

energy (lowest system loss) is achieved (i.e., the transmitter or receiver, transmission line, and antenna are all the same impedance), and the best possible transfer of signal energy will occur.

Optimizing Line Length

When it is necessary to use a transmission line whose impedance is significantly different from that of the load, it is possible to make good use of standing waves and the repetitive impedance variations along the line to match the antenna to the transmitter or the receiver to the antenna by cutting the line to a specific length. An example is when the only available equipment consists of a 300-ohm twin-lead transmission line; a 50-ohm half-wave dipole antenna; and a 50-ohm internal impedance transceiver. (Note: The internal impedance of most USMC radios is 50 ohms). Ordinarily, this impedance combination would result in lost energy that could affect the quality of communications. However, if a single frequency is used to communicate, the length between the antenna and the receiver can be matched. This occurs because the impedance of the receiver is repeated at intervals of a half-wavelength along the line.

For end-fed, long-wire antennas, a similar impedance match can be made by feeding the long wire with a quarter-wavelength piece of wire that is connected to the transmitter on one end and to the end of the long wire on the other. The quarter-wavelength section doesn't need to be a separate piece of wire. For a 2-wavelength, long-wire antenna, for example, the wire can be cut to 2 1/4 wavelengths. The entire quarter-wavelength section then becomes the transmission line between the radio and the antenna.

Downloaded from http://www.everyspec.com

Attenuation

Transmission lines do not transfer all of the energy applied at one end of the line to the opposite end. Attenuation is energy that is lost when converted into heart, partially due to conductor (wire) resistance. More energy is lost due to the insulation material used to space the conductors (dielectric loss). Some insulating materials (e.g., Teflon) have extremely low loss while others (e.g., rubber or wood) have relatively high loss, especially at frequencies above about 30 MHz. Old, dry wood (especially redwood) may be boiled in paraffin or bee's wax to make a fairly good insulator at frequencies up to about 200 MHz. Polyethylene, a common insulation material used in coaxial cables, has an average loss of about twice that of Teflon in the 100-MHz range for cables having a diameter of less than about one centimeter. Dry air is a better insulator than most solid, liquid, or flexible materials. Some inert gases (e.g., nitrogen, helium, and argon) are superior to air and are often used under pressure to fill coaxial cables used with high-powered transmitters.

Since attenuation results from conductor resistance and dielectric loss, transmission lines using large diameter conductors lose less energy than cables having small diameter conductors. Also, transmission lines having a large spacing between conductors (high impedance) will lose less energy than those with a smaller spacing (lower impedance) since they carry smaller currents and there is less energy lost in conductor resistance. Thus, 300-ohm twin-lead has less loss than coaxial cable at most frequencies. Among coaxial cables, the larger the diameter, the lower the loss, assuming the same insulator is used. It is also true that coaxial cable, which has an impedance of 75 ohm, has slightly lower loss than 50-ohm cable, when both cables have about the same diameter. When there is a choice, it is best to use the largest available transmission line which matches the impedance of both the antenna and transmitter.

Downloaded from http://www.everyspec.com

MAKING THE BEST USE OF AVAILABLE TRANSMISSION LINES

It is often necessary to feed a balanced antenna (e.g., horizontal dipole) with coaxial cable. While this is not considered good practice, it will perform satisfactorily under most conditions. When coaxial cable is used for this purpose, it should run perpendicular to the dipole wires for a distance greater than one-half of the length of the dipole. This will help to prevent unwanted RF power from being induced on the outside shield of the cable. It is also advisable to make sure that the total length of the coaxial cable and one side of the antenna is not equal to a half-wavelength or any multiple thereof. This will prevent the outside conductor from becoming resonant and acting as a radiating part of the antenna. The same precaution should be taken with twin-lead transmission line.

Occasionally, it may also be necessary to feed an unbalanced antenna (e.g., a whip with twin-lead or balanced line). Again this is not considered good practice, but the bad effects can be minimized if care is taken. If the transmitter has a balanced output circuit, little difficulty will be experienced. However if the output is unbalanced, the hot terminal or coaxial center at the transmitter output must be connected to the same wire of the twin-lead as is the vertical whip at the other end of the twin-lead. This ensures that the ground side of the transmitter output is connected to the side of the twin-lead that goes to the ground side of the unbalanced antenna.

If the twin-lead is reversed and the antenna ground terminal is connected to the hot terminal of the transmitter, a large portion of the transmitter output may be wasted, making communications either difficult or impossible. Twin-lead of the type commonly used with television sets usually has one tinned and one bare copper conductor. This color coding readily permits correct connection of the transmitter to the antenna. It is also advisable to make the length of

Downloaded from http://www.everyspec.com

the twin-lead equal to a half-wavelength or any multiple of a half-wavelength. When possible, the twin-lead should be twisted so that it forms a long helix with about one twist every thirty centimeters, or so. Twisting helps to prevent transmission line radiation and reduces noise pickup when receiving.

Twin-Lead Limitations

It is generally best not to use twin-lead or balanced line at frequencies higher than about 200 MHz for three reasons.

First, the spacing between the two wires becomes sufficiently large in terms of a wavelength that radiation from the line occurs. When lengths over 30 meters are employed, this radiation may represent a significant loss of energy.

Second, if the twin-lead or balanced lines must come in close contact (less than 2 or 3 cm) with metal, masonry, or wood surfaces, additional losses will be encountered due to the substantial impedance change which takes place along the section of the line next to the surface. This mismatch loss becomes apparent at frequencies above 200 MHz because the length of the section affected becomes a substantial portion of a wavelength long. At lower frequencies, the section of line involved is too short to be seriously affected.

Third, twin-lead picks up more locally generated interference than coaxial cable since the outer conductor of the coaxial cable acts as a shield for the center conductor. Radiation and noise pickup by twin-lead can be partially prevented by twisting it once every 20 or 30 centimeters.

When using common, TV twin-lead (300 ohm), preference should be given to the deep brown rather than the light, colorless variety. The darker colored twin-lead withstands the effects of sunlight and

Downloaded from http://www.everyspec.com

moisture after prolonged outdoor exposure much better than the clear type. The clear, colorless, twin-lead tends to crack after a few months exposure to the Sun. It also begins to absorb moisture which greatly increases energy loss.

Directly Connecting the Transceiver and Antenna

In many instances the transmitter or receiver may be connected directly to the antenna wire without using a transmission line. This is particularly true with indoor antennas in the HF range and with many VHF whip antennas designed for use with manpack transceivers.

When a direct connection is made between a transmitter and the antenna at frequencies below 30 MHz or where the length of the antenna wire is much shorter than 0.25 λ, the output circuit of the transmitter usually contains a matching device which may be used to tune the antenna efficiently to resonance. This tuning actually matches the impedance of the antenna to the output impedance of the transmitter.

When a VHF transceiver is designed to connect directly to a short whip or self-contained, collapsible rod, the output circuit is usually designed to accommodate the range of impedances likely to be encountered at the base of the whip or rod.

The efficiency of these devices is usually low since the ground return circuit for the antenna may range from nothing more than the case of the transmitter to the hand and body of an individual holding the device. The impedance of the antenna may vary with frequency over a range of 5 to 1 or greater. Thus, antenna efficiencies of from 25 to 50 percent are not uncommon with such devices.

Downloaded from http://www.everyspec.com

BALUNS

There are times when a balanced antenna must be used with a transmitter or receiver which has an unbalanced output or input circuit. While it is possible to make a direct connection between balanced and unbalanced devices, it is certainly not good practice. A balun can be used to transform energy from balanced to unbalanced devices and vice versa.

The word balun comes from balanced to unbalanced transformer. Many balun types are easily constructed in the field. Using them can often make the difference between marginal communications and completely solid contact. This may be especially true in the receiving case where a balun can result in a substantial reduction in the amount of manmade noise and interference received by a poorly balanced antenna system. The balun is usually placed at the antenna terminals so that a coaxial transmission line can be used. However, it is possible to feed a balanced antenna with twin-lead or any kind of balanced line, and the balun is placed near the transmitter or receiver terminals (see figs. 3-2 and 3-3).

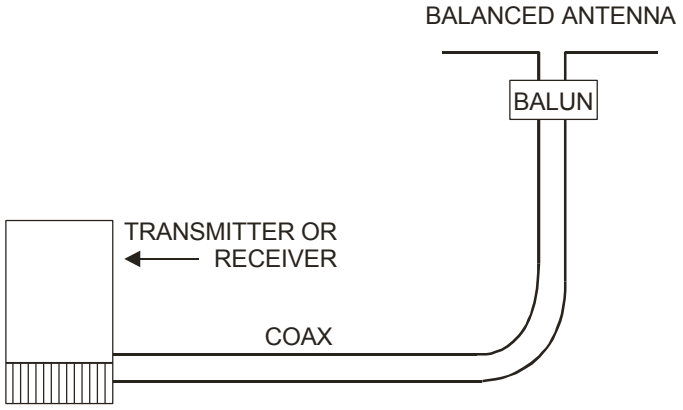

Figure 3-2. A Balun Placed at the Antenna.

Downloaded from http://www.everyspec.com

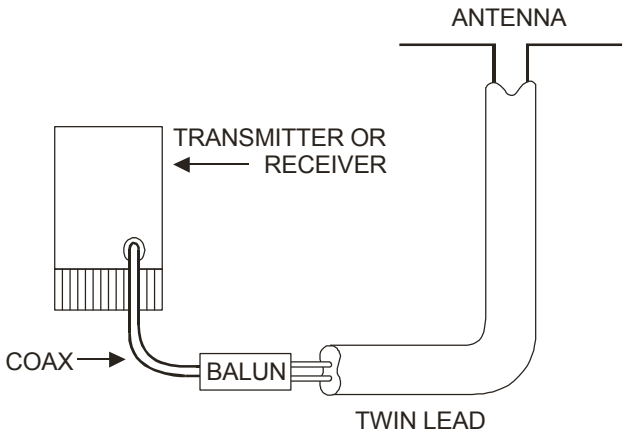

Figure 3-3. Balun Placed at the Transmitter or Receiver.

Cable Connectors

Cable connector fittings are available for all standard transmission lines. Although it takes some time to prepare the cable ends and solder the fittings on, it may be well worth it later if rapid assembly or disassembly of a communications system is necessary.

Balanced Antenna

It is highly desirable to use a receiving antenna which is balanced with respect to ground. This insures the antenna's insensitivity to locally generated noise. Balancing only the receiving antenna is not enough. The entire receiving system must be balanced to successfully reject noise. The antenna should be connected to its receiver so as not to disrupt the antenna's balance. Receivers are supplied with either balanced or unbalanced antenna terminals, and sometimes both.

(reverse blank)

Downloaded from http://www.everyspec.com

Chapter 4

HF Antenna Selection

The HF portion of the radio spectrum is very important to communications. Radio waves in the 3 to 30 MHz frequency range are the only ones that are capable of being reflected or returned to Earth by the ionosphere with predictable regularity. To optimize the probability of a successful sky wave communications link, select the frequency and take-off angle that is most appropriate for the time of day transmission is to take place.

Merely selecting an antenna that radiates at a high elevation angle is not enough to ensure optimum communications. Various large conducting objects, in particular the Earth's surface, will modify an antenna's radiation pattern. Sometimes, nearby scattering objects may modify the antenna's pattern favorably by concentrating more power toward the receiving antenna. Often, the pattern alteration results in less signal transmitted toward the receiver.

When selecting an antenna site, the operator should avoid as many scattering objects as possible. How the Earth's surface affects the radiation pattern depends on the antenna's height. The optimum height above electrical ground is about 0.4 λ at the transmission frequency. However, the exact height is not critical.

Although NVIS is the chief mode of short-haul HF propagation, the ground wave and direction (LOS) modes are also useful over short paths. How far a ground wave is useful depends on the electrical conductivity of the terrain or body of water over which it travels. The direct wave is useful only to the radio horizon, which extends slightly beyond the visual horizon.

Downloaded from http://www.everyspec.com

ANTENNA SELECTION PROCEDURE

Selecting the right antenna for an HF radio circuit is very important. When selecting an HF antenna, first consider the type of propagation. Ground wave propagation requires low take-off angle and vertically polarized antennas. The whip antenna included with all radio sets provides good omnidirectional ground wave radiation.

If a directional antenna is needed, select one with good, low-angle vertical radiation. An example is an AN/MRC-138 with its component 32-foot whip set up on a 200-mile circuit. With the radiation characteristics of the whip antenna, the radiated power of the transmitter or whip could be 300 watts for the take-off angle required for a 200-mile circuit.

If a 35-foot half-wave horizontal dipole is used instead of the whip, the radiated power would be 5,000 watts. By using the dipole instead of the whip, the radiated power is increased more than 16 times. A circuit with 5,000 watts of radiated power produces a better signal than a 300-watt circuit using the same frequency.

Selecting an antenna for sky wave propagation is more complex. First, find the circuit (range) distance so that the required take-off angle can be determined. Table 4-1 gives approximate take-off angles for daytime and nighttime sky wave propagation. A circuit distance of 966 kilometers (600 miles) requires a take-off angle of approximately 25° during the day and 40° at night. Select a high-gain antenna (25° to 40°). If propagation predictions are available, skip this step, since the predictions will probably give the take-off angles required.

Next, determine the required coverage. A radio circuit with mobile (vehicular) stations or several stations at different directions from the transmitter requires an omnidirectional antenna. A point-to-point

Downloaded from http://www.everyspec.com

circuit uses either a bidirectional or a directional antenna. Normally, the receiving station locations dictate this choice (see table 4-1).

Table 4-1. Take-Off Angle vs. Distance.

Take-off Angle (Degrees)	Distance			
	F2 Region Daytime		F2 Region Nighttime	
	kilometers	miles	kilometers	miles
0	3220	2000	4508	2800
5	2415	1500	3703	2300
10	1932	1200	2898	1800
15	1450	900	2254	1400
20	1127	700	1771	1100
25	966	600	1610	1000
30	725	450	1328	825
35	644	400	1127	700
40	564	350	966	600
45	443	275	805	500
50	403	250	685	425
60	258	160	443	275
70	153	95	290	180
80	80	50	145	90
90	0	0	0	0

Before selecting a specific antenna, examine the available construction materials. At least two supports are needed to erect a horizontal dipole, with a third support in the middle for frequencies of 5 MHz or less. If these supports or other items to use as supports are unavailable, the dipole cannot be constructed, and another antenna should be selected. Examine the proposed antenna site to determine if the antenna will fit. If not, select a different antenna.

Downloaded from http://www.everyspec.com

The site is another consideration. Usually, the tactical situation determines the position of the communications antennas. The ideal setting would be a clear, flat area (i.e., no trees, buildings, fences, power lines, or mountains). Unfortunately, an ideal location is seldom available. Choose the clearest, flatest area possible. If the proposed site is obstructed, try to maintain the horizontal distance listed in table 4-2. Often, an antenna must be constructed on irregular sites. This does not mean that the antenna will not work. It means that the site will affect the antenna's pattern and function.

Table 4-2. Assuming a 30-Foot Antenna and 75-Foot Trees

Take-Off Angle (Degrees)	Required Horizontal Distance from Trees	
0	18	kilometers
5	1932	meters
10	966	meters
15	644	meters
20	483	meters
25	370	meters
30	298	meters
35	241	meters
40	201	meters
45	169	meters
50	145	meters
60	105	meters
70	64	meters
80	32	meters
90	0	meters

Downloaded from http://www.everyspec.com

After selecting the antenna, determine how to feed the power from the radio to the antenna (fig. 4-1). Most tactical antennas are fed with coaxial cable (RG-213). Coaxial cable is a reasonable compromise of efficiency, convenience, and durability. Issued antennas include the necessary connectors for coaxial cable or for direct connection to the radio.

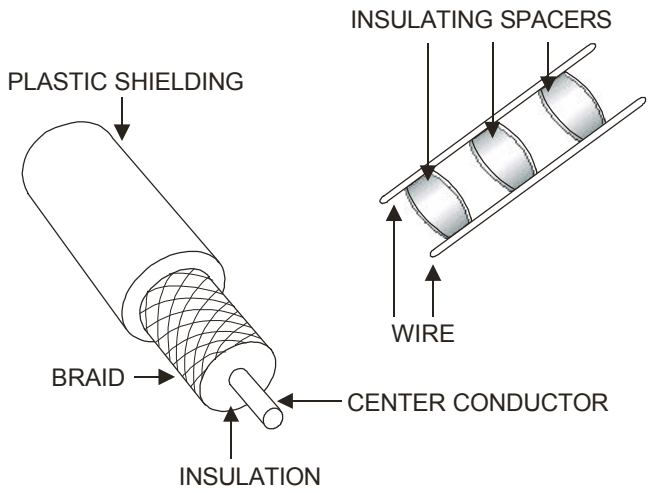

Figure 4-1. Antenna Feed Lines.

Problems may arise in connecting field expedient antennas. The horizontal half-wave dipole uses a balanced transmission line (open-wire). Coaxial cable can be used, but it may cause unwanted RF current.

A balun prevents unwanted RF current flow, which causes a radio to be hot and shock the operator. Install the balun at the dipole feed point (center) to prevent unwanted RF current flow on the coaxial cable. If a balun is unavailable, use the coaxial cable that feeds the

Downloaded from http://www.everyspec.com

antenna as a choke (see fig. 4-2). Connect the cable's center wire to one leg of the dipole and the cable braid to the other antenna leg. Form the coaxial cable into a 6-inch coil (consisting of ten turns), and tape it to the antenna under the insulator for support.

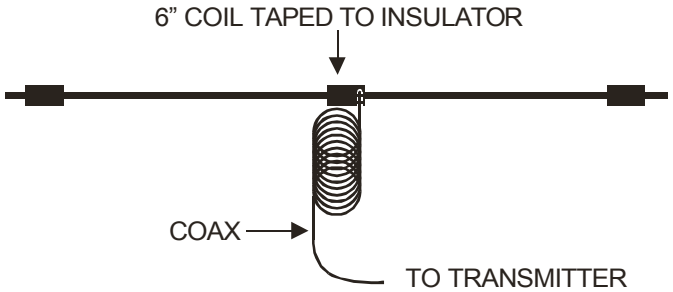

Figure 4-2. Coax RF Current Choke.

DETERMINING ANTENNA GAIN

Determine antenna gain at a specific take-off angle from the vertical radiation pattern. Figure 4-3 shows the vertical antenna pattern for the 32-foot vertical whip. The numbers along the outer ring (90°, 80°, 70°) represent the angle above the Earth; 90° would be straight up, and 0° would be along the ground. Along the bottom of the pattern are numbers from -10 (at the center) to +15 (at the edges). These numbers represent the gain in decibels over an isotropic radiator (dBi).

To find the antenna gain at a particular frequency and take-off angle, locate the desired take-off angle on the plot. Follow that line toward the center of the plot to the pattern of the desired frequency. Drop down and read the gain from the bottom scale. If the gain of a 32-foot vertical whip at 9 MHz and 20° take-off angle is desired, locate 20° along the outer scale. Follow this line to the 9-MHz

Downloaded from http://www.everyspec.com

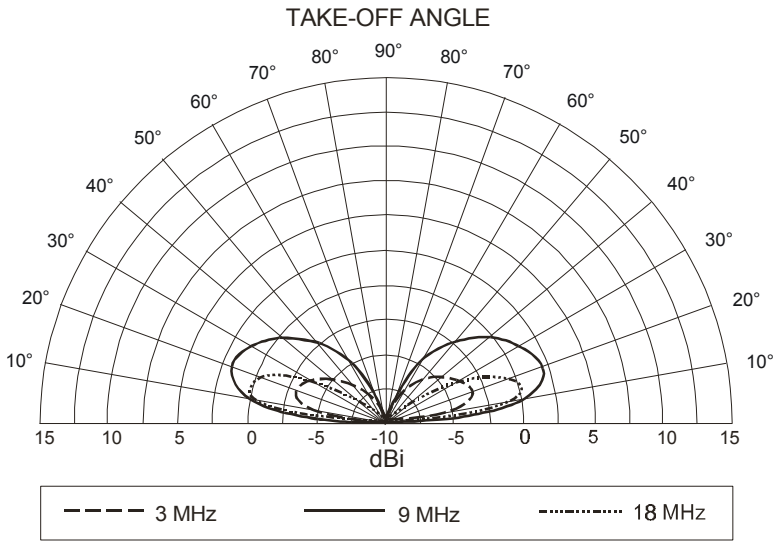

Figure 4-3. 32-Foot Vertical Whip, Vertical Pattern.

pattern line. Move down to the bottom scale. The gain is a little less than 2.5 dBi (the line between 0 and 5 dBi). The gain of the 32-foot vertical whip at 9 MHz and 20° is 2 dBi.

Once the antenna's overall characteristics are determined, use the antenna selection matrix (table 4-3 on page 4-8) to find the specific antenna for a circuit. If the proposed circuit requires a short-range, omnidirectional, wideband antenna, the selection matrix shows that the only antenna that meets all the criteria is the AS-2259/GR.

If the circuit requires a medium-range directional antenna, several antennas could be used (e.g., long wire, sloping vee, or vertical half-rhombic). The antenna choice depends on available installation space, available components, and required highest gain take-off angle. For a required take-off angle of 25° at a frequency of 9 MHz,

Downloaded from http://www.everyspec.com

the 100-foot vertical half-rhombic antenna is the best choice because it provides the highest gain at the required take-off angle.

Table 4-3. Antenna Selection Matrix.

	Use				Directivity			Polar-ization		Band-width	
		Sky Wave									
	Ground Wave	Short (500 Miles)	Medium (500 to 1200 Miles)	Long (1200 Miles)	Omnidirectional	Bidirectional	Directional	Horizontal	Vertical	Wide	Narrow
AS-2259/GR		X			X					X	
Vertical Whip	X				X				X	X	
Half-Wave Dipole		X	X			X		X			X
Inverted Vee	X	X	X			X		X	X		X
Long Wire	X		X	X		X	X		X	X	
Inverted L	X	X	X		X	X		X	X		X
Sloping Vee	X		X	X			X	X		X	
Sloping Wire	X		X	X		X	X		X	X	
Vertical Half-Rhombic	X		X	X			X		X	X	

ANTENNA TYPES

The AS-2259/GR, vertical whip, half-wave dipole, inverted vee, long wire, inverted L, sloping vee, sloping wire, and vertical half-rhombic antennas are described and illustrated.

Downloaded from http://www.everyspec.com

AS-2259/GR

The AS-2259/GR antenna (fig. 4-4) provides NVIS propagation for short-range radio circuits. It consists of two crossed sloping dipoles positioned at right angles to each other and is supported at the center by a 15-foot mast. In use, the dipole's components provide guying support for the mast. Characteristics are—

Frequency range:	2 to 30 MHz
Polarization:	Horizontal and vertical simultaneously
Power capability:	1,000 watts
Radiation pattern	
Azimuthal (bearing):	Omnidirectional
Vertical (take-off angle):	See figure 4-5 on page 4-10

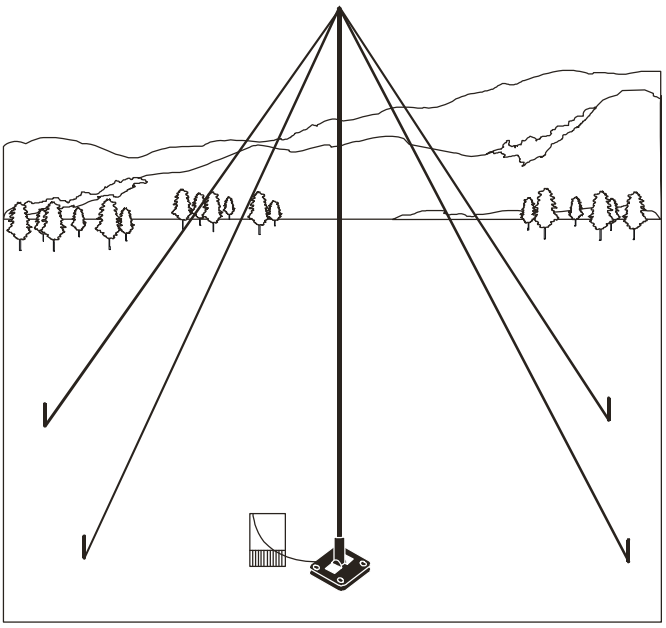

Figure 4-4. AS-2259/GR.

Downloaded from http://www.everyspec.com

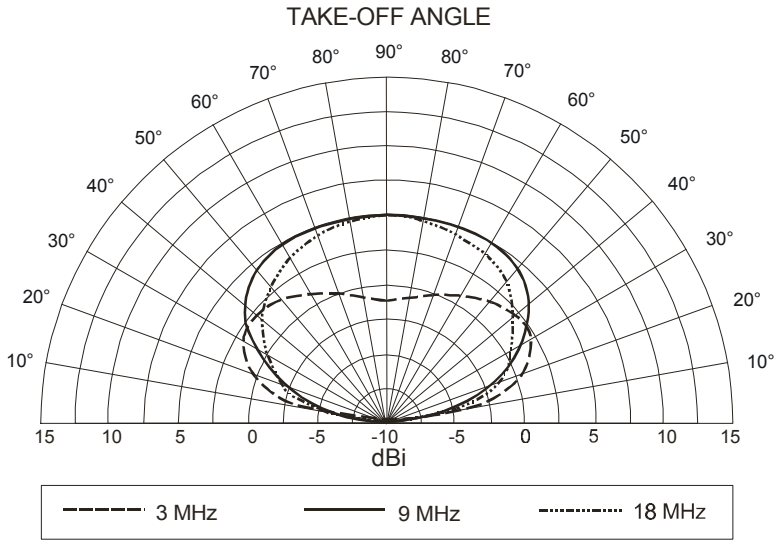

Figure 4-5. AS-2259 Vertical Radiation Pattern.

Vertical Whip

The vertical whip is a component of all Marine Corps radio sets (see fig. 4-6). It is available and easy to use on almost all radio circuits; however, it is probably the worst antenna to use on sky wave circuits. Unless the radio circuit involves omnidirectional ground wave propagation, any other antenna would provide better communications. For example, vertical whips are often used for long-range point-to-point circuits with marginal success. Since the circuit is point-to-point, there is no need to radiate energy in all directions. Radiation in directions other than at the distant station is wasted and serves no useful purpose. Concentrating the omnidirectional radiation at the distant station produces a better received signal and reduces interference around the transmitting antenna. Concentrate radiation in a single direction with a directional antenna. Figures

Downloaded from http://www.everyspec.com

4-7 on page 4-12, 4-8 on page 4-13, and 4-3 on page 4-7 illustrate various vertical whip antenna patterns.

Characteristics are—

Frequency range:	2 to 30 MHz
Polarization:	Vertical
Power capability:	Matched to specific radio
Radiation pattern	
Azimuthal (bearing):	Omnidirectional
Vertical (take-off angle):	See figures 4-7 on page 4-12, 4-8 on page 4-13, and 4-3 on page 4-7

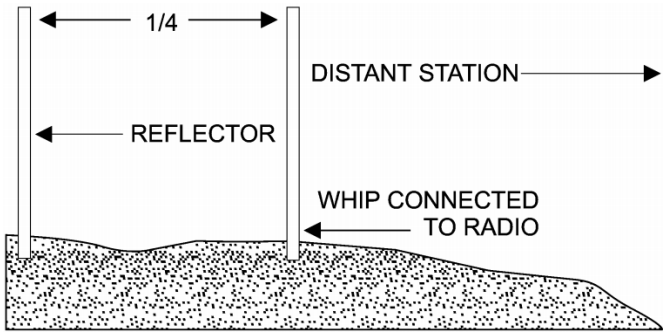

Figure 4-6. Vertical Whip with Reflector.

If a vertical whip must be used, there are several techniques to improve the antenna radiation. If the antenna is mounted directly to the radio, ground the radio. If the antenna is remoted from the radio ground the antenna base plate. A 6-foot ground rod is preferable for both. Ground radials (wires spread out like wheel spokes with the antenna at the center) may improve the antenna radiation. Connect these radials to the ground rod directly beneath the antenna.

Downloaded from http://www.everyspec.com

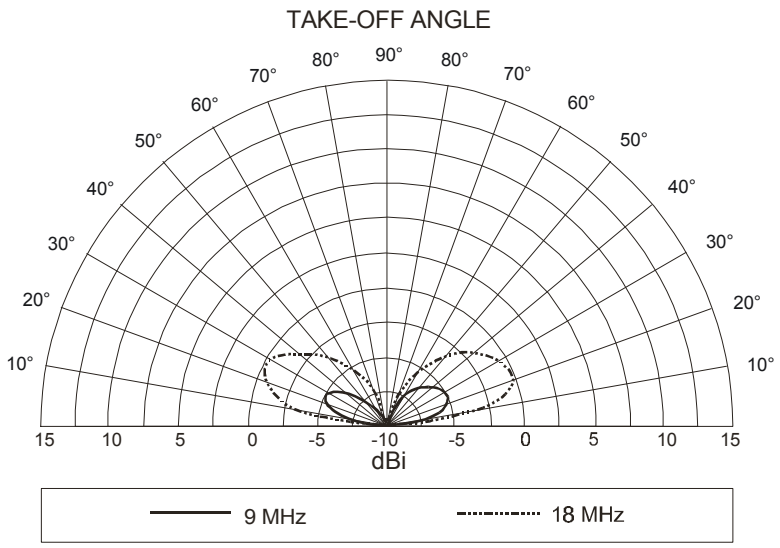

Figure 4-7. 10-Foot Vertical Whip (Vertical Pattern).

A ground radial system can be constructed easily from field telephone wire (WDl/TT) and can be kept with the radio. Cut the field wire into twenty 45-foot lengths, and remove 6 inches of insulation from one end. Using twine or a clamp, bundle together the uninsulated (bare) ends. Attach a 2-foot length of thick wire to the bare ends so that the thick wire extends about one foot beyond the wire bundle. Solder the wire bundle to ensure good electrical contact. In use, the thick wire extending from the bundle connects the radials to a ground rod. The radials are then spread out like wheel spokes with the vertical whip at the center. Radio operators should experiment with different radial systems to determine which one provides the best connectivity.

A reflector placed approximately one-quarter wavelength behind a vertical whip may also improve the whip's performance. A reflector

Downloaded from http://www.everyspec.com

is a vertical wire, metallic pole, or another whip that is insulated from the ground. It is placed so that the reflector, the whip, and the distant station are on a straight line. The reflector will reflect radio energy striking it and cause the energy to travel toward the distant station, increasing the total energy radiated in the desired direction. To work properly, the reflector must be longer than the whip. If the reflector is shorter, it will act as a director, directing the radio signal away from the distant station. A reflector is longer and is placed behind the whip; a director is shorter and is placed between the whip and the distant station. Adjust the position of the reflector while listening to the distant station until the strongest signal is received.

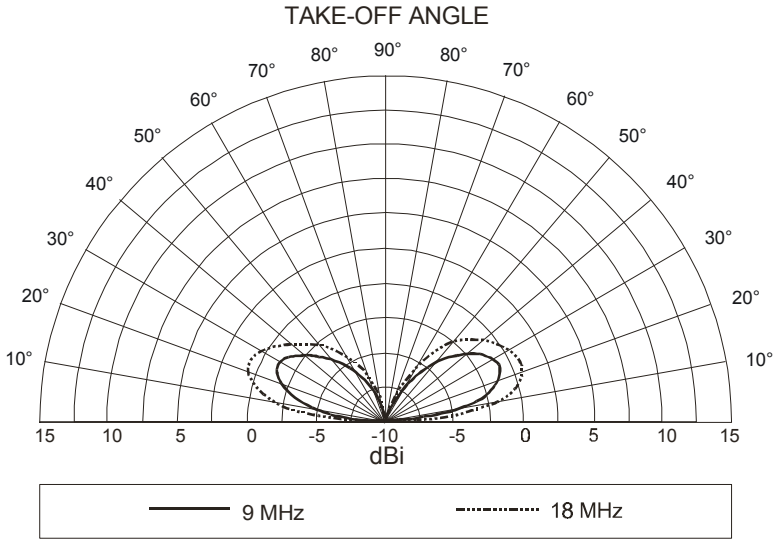

Figure 4-8. 15-Foot Vertical Whip (Vertical Pattern).

Downloaded from http://www.everyspec.com

The length of a vertical whip antenna is calculated from the following formula:

$$\text{Length in feet} = \frac{234}{\text{Frequency in MHz}}$$

For WD-l/TT

$$\text{Length in feet} = \frac{225.50}{\text{Frequency in MHz}}$$

Half-Wave Dipole

The horizontal half-wave dipole (doublet) antenna is used on short- and medium-length sky wave paths (up to approximately 1,200 miles). Since it is relatively easy to design and construct, the doublet is the most commonly used field expedient wire antenna. It is a very versatile antenna; by adjusting the antenna's height above ground, the maximum gain can vary from medium take-off angles (for medium path-length circuits) to high take-off angles (for short path-length circuits). When the antenna is constructed for medium take-off angle gain (a height of approximately one-half wavelength), the doublet is a bidirectional antenna (i.e., the maximum gain is at right angles to the wire). This is the broadside pattern normally associated with a half-wave dipole antenna. Format A in figure 4-9 shows this pattern in polar plot format.

Format B shows the radiation off the ends of the wire. It is easily seen by comparing with format A that for maximum gain, a doublet one-half wavelength above ground should be constructed so that the side of the antenna points in the direction of the distant station. If the antenna is lowered to only one-quarter wavelength above ground, format C results. This lower antenna height produces

Downloaded from http://www.everyspec.com

maximum gain at high take-off angles. In format D, the radiation off the ends of the doublet also has maximum gain at high take-off angles. This means that for short path-length circuits, which require high take-off angles, a doublet antenna one-quarter wavelength above ground produces almost omnidirectional coverage.

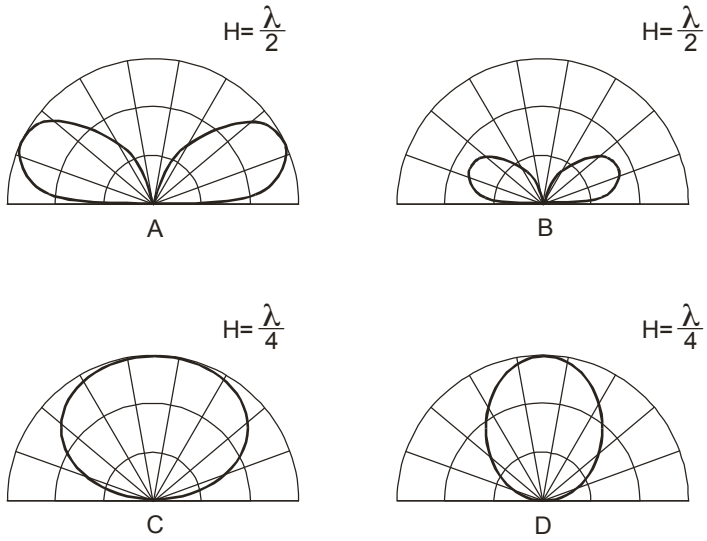

Figure 4-9. Illustrative Doublet Antenna Patterns.

The vertical plots included for half-wave dipole antennas are given for heights from 8 to 12 meters. The plot for 8 meters shows that for 3 and 9 MHz the antenna has high-angle radiation. At those frequencies the antenna is close to ground (compared to a half-wavelength). The pattern for 18 MHz shows the characteristic bidirectional pattern since 8 meters is a half-wave at 18 MHz.

The half-wave dipole is a balanced resonant antenna (see fig. 4-10 on page 4-16). It produces its maximum gain for a very narrow

Downloaded from http://www.everyspec.com

range of frequencies, normally 2 percent above or below the design frequency. Since frequency assignments are usually several megahertz apart, it is necessary to construct a separate dipole for each frequency assigned (see figs. 4-11 and 4-12 on page 4-17, and 4-13 on page 4-19). If space and other resources are unavailable to erect separate dipoles, three or four dipoles can be combined to occupy the space normally required for one.

Each wire is a half-wavelength for an assigned frequency. The separate dipoles are connected to the same center insulator, or preferably a balun, and are fed by a single coaxial cable. When the antenna is

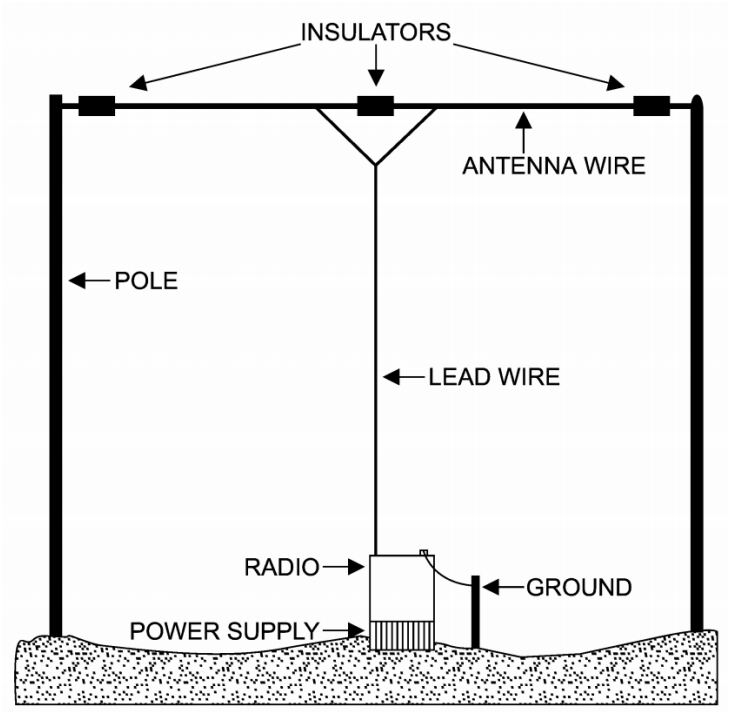

Figure 4-10. Half-Wave Dipole Antenna.

Downloaded from http://www.everyspec.com

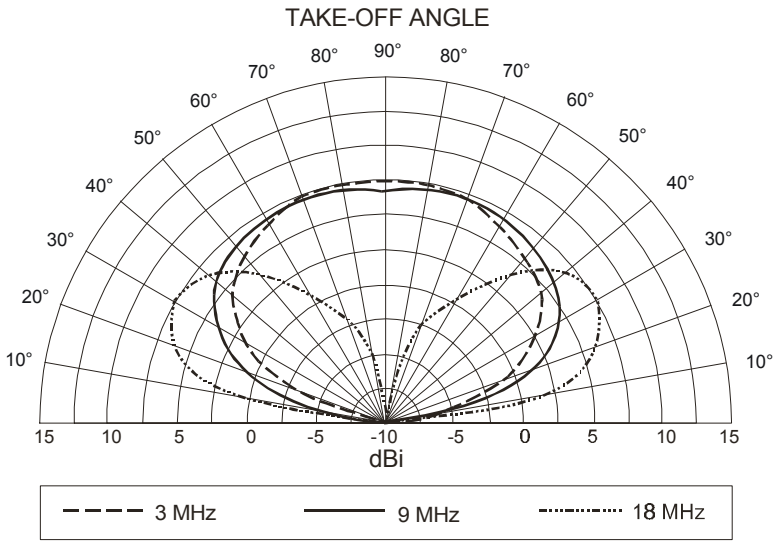

Figure 4-11. 8-Meter Half-Wave Dipole (Vertical Pattern).

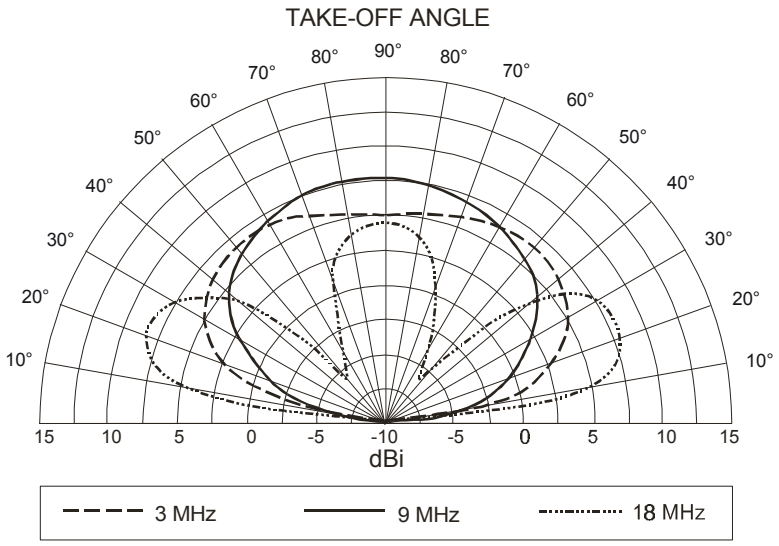

Figure 4-12. 10-Meter Half-Wave Dipole (Vertical Pattern).

Downloaded from http://www.everyspec.com

fed with an assigned frequency, the doublet cut for that frequency will radiate the energy. Up to four separate dipoles can be combined in this manner. When constructing this antenna, examine the individual frequency assignments to determine if one frequency is three times as large as another. If this relationship exists between two frequencies, one dipole cut in length for the lower of the two frequencies will work well for both frequencies.

The length of a half-wave dipole is calculated from the following relationship:

$$\text{Dipole length} = \frac{142 \text{ meters}}{\text{Frequency in MHz}} \quad \text{or} \quad \frac{468 \text{ feet}}{\text{Frequency in MHz}}$$

The height of a half-wave dipole is figured using—

$$\text{Height X/4} = \frac{75 \text{ meters}}{\text{Frequency in MHz}} \quad \text{or} \quad \frac{246 \text{ feet}}{\text{Frequency in MHz}}$$

$$\text{Height X/2} = \frac{150 \text{ meters}}{\text{Frequency in MHz}} \quad \text{or} \quad \frac{492 \text{ feet}}{\text{Frequency in MHz}}$$

Use the right relationship for the right purpose. If the height relationship is used for the dipole length, the antenna will be too long and will not work properly. Characteristics are—

Frequency range:	± 2% of design frequency
Polarization:	Horizontal
Power capability:	1,000 watts
Radiation Pattern	
Azimuthal (bearing):	Bidirectional λ/2 high basically omnidirectional at λ/4 high
Vertical (takeoff angle):	See figures 4-11 and 4-12 on page 4-17, and 4-13 on page 4-19

Downloaded from http://www.everyspec.com

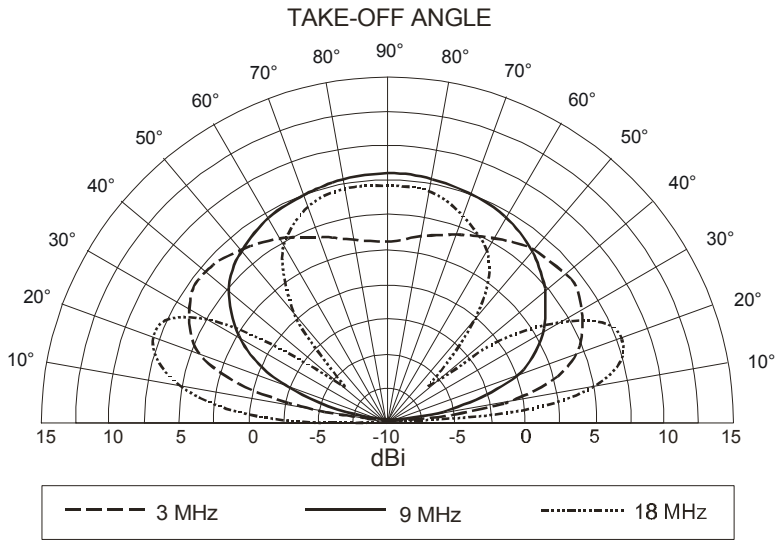

Figure 4-13. 12-Meter Half-Wave Dipole (Vertical Pattern).

Inverted Vee

The inverted vee, or drooping dipole, is similar to a dipole but uses only a single center support (see fig. 4-14 on page 4-20). Like a dipole, it is designed and cut for a specific frequency and has a bandwidth of 2 percent above or below the design frequency. Because of the inclined sides, the inverted vee antenna produces a combination of horizontal and vertical radiation—vertical off the ends and horizontal broadside to the antenna. All the construction factors for a dipole also apply for the inverted vee. The inverted vee has less gain than a dipole, but using only a single support could make this antenna the preferred antenna in some tactical situations (see fig. 4-15 on page 4-21).

Downloaded from http://www.everyspec.com

Characteristics are—

Frequency range:	± 2% of design frequency
Polarization:	Horizontal
Power capability:	1,000 watts
Radiation pattern	
Azimuthal (bearing):	Basically omnidirectional with combination polarization
Vertical (take-off angle):	See figure 4-15

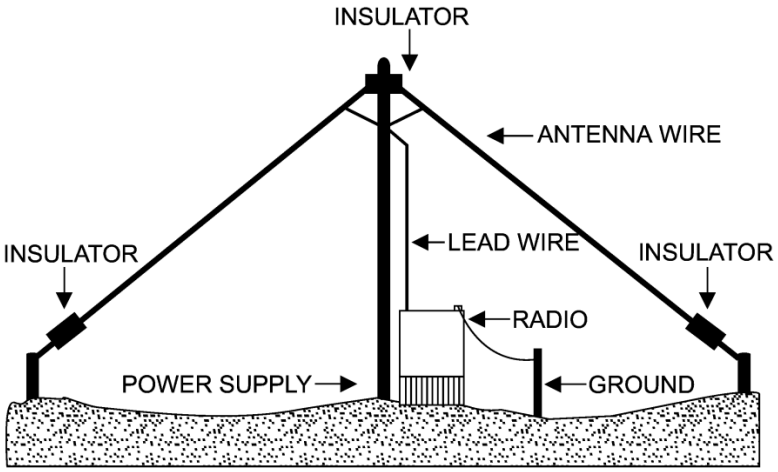

Figure 4-14. Inverted Vee Antenna.

Downloaded from http://www.everyspec.com

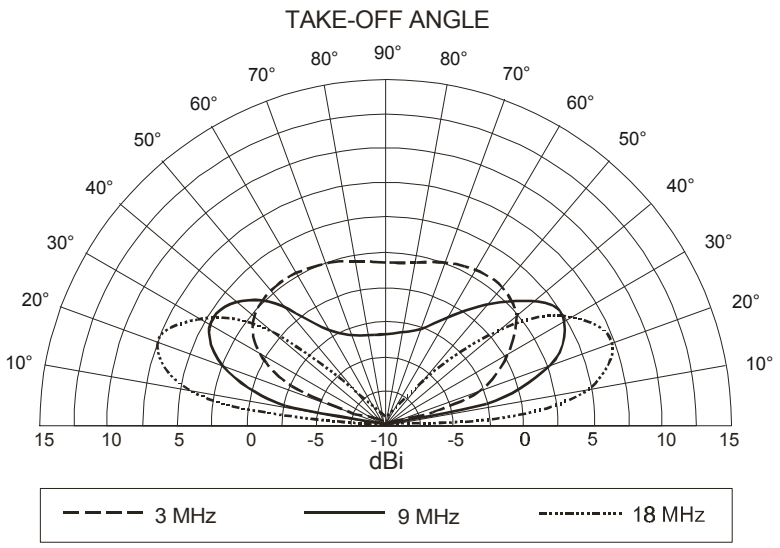

Figure 4-15. Inverted Vee (Vertical Pattern).

Long Wire

A long wire antenna is one that is long compared to a wavelength (see fig. 4-16 on page 4-22). A minimum length is one-half wavelength. However, antennas that are at least several wavelengths long are needed to obtain good gain and directional characteristics. Constructing long wire antennas is simple, and there are no critical dimensions or adjustments. A long wire antenna will accept power

Downloaded from http://www.everyspec.com

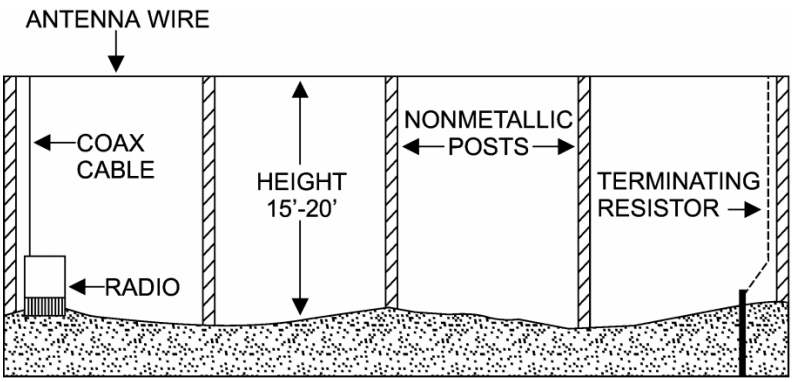

Figure 4-16. Long Wire Antenna.

and radiate it well on any frequency for which its overall length is not less than one-half wavelength.

The gain and take-off angle of a long wire antenna depend on the antenna's length. The longer the antenna, the more gain, and the lower the take-off angle. Gain has a simple relationship to length; however, take-off angle is a bit more complicated. A long wire antenna radiates a cone of energy around the tie wire, much like a funnel with the antenna wire passing through the funnel opening. The narrow part of the funnel would be the feed point, and the open part would be toward the distant station. If the funnel were cut in half, the resulting half cone would represent the pattern of the antenna. As the antenna is lengthened, the cone of radiation (funnel) moves closer and closer to the wire. Figure 4-17 shows pattern

Downloaded from http://www.everyspec.com

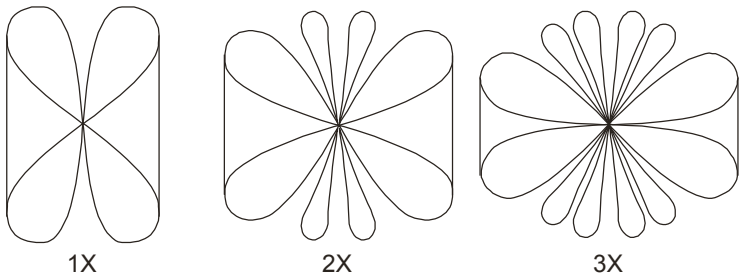

Figure 4-17. Long Wire Radiation Patterns.

changes as the wire is lengthened. The patterns represent a view from directly below the antenna.

In the three-wavelength pattern, for very low-angle radiation, position the wire somewhat away from the direction of the distant station so that the main lobe of radiation points at the receiving station. If a higher take-off angle is required, point the wire directly at the distant station. For take-off angles from 5 to 25 feet, the following general off-axis angles will provide satisfactory radiation on toward the distant station (see table 4-4).

Table 4-4. Off-Axis Angle.

Wire Length (Feet)	2	3	4	5	6
Off-Axis Angle (Degrees)	30	20	13	10	10

To make a long wire antenna directional, place a terminating device at the distant station end of the antenna. The terminating device should be a 600-ohm, noninductive resistor capable of absorbing at

Downloaded from http://www.everyspec.com

least one-half of the transmitter power. Terminating resistors are components of some radio sets but can also be fabricated locally using supply system components (100-watt, 106-ohm resistor).

Constructing a long wire antenna requires only wire, support poles, insulators, and a terminating resistor (if directionality is desired). The only requirement is that the antenna be strung in as straight a line as the situation permits. The antenna is only 15 to 20 feet above ground, so tall support structures are not required. The antenna is normally fed through a coupler that can match the antenna's 600-ohm impedance. Coaxial cable can be used if a 12 to 1 balun is available to convert the coaxial cable 50-ohm impedance to the required 600 ohms. Vertical radiation plots of this antenna are not presented because of the great variation in the pattern as the length changes. For take-off angles between 5 and 25 feet, use the off-axis graph (table 4-4 on page 4-23) and the gain versus length graph (table 4-5) to determine the proper antenna length. Characteristics are—

Frequency range:	2 to 30 MHz
Polarization:	Vertical
Power capability:	1,000 watts
Radiation pattern	
Azimuthal (bearing):	Bidirectional with terminating resistor
Vertical (take-off angle):	Depends on length

Inverted L

The inverted L is a combination antenna made up of a vertical section and a horizontal section (see fig. 4-18). It provides omnidirectional radiation for ground wave propagation from the vertical element and high-angle radiation from the horizontal element for short-range sky wave propagation. The classic inverted L has a quarter-wave vertical section and a half-wave horizontal section

Downloaded from http://www.everyspec.com

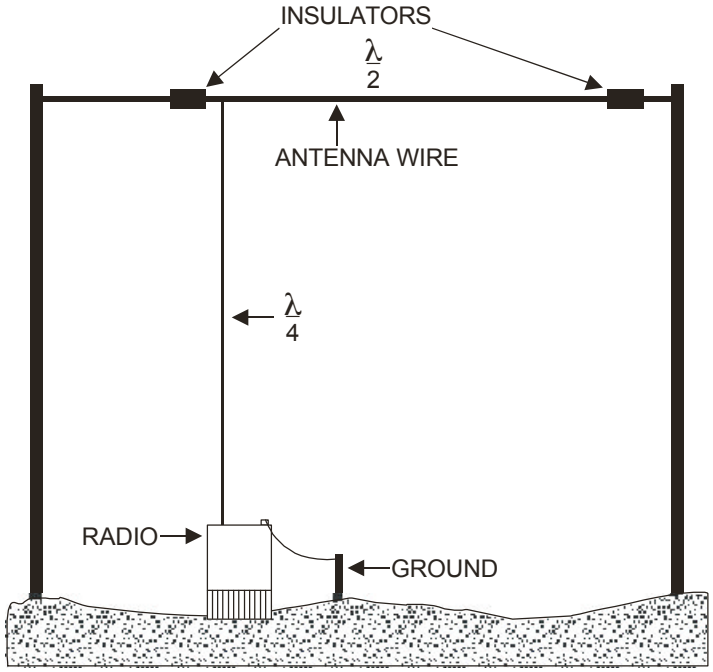

Figure 4-18. Inverted L Antenna.

and is used for a very narrow range of frequencies. By using the antenna couplers that are part of many radio sets, the dimensions of the inverted L can be modified to allow ground wave and short-range sky wave propagation over a range of frequencies. Using a vertical height of 35 to 40 feet, the following horizontal lengths will give reasonable performance for short-range sky wave circuits.

Table 4-5. Gain Versus Length.

Frequency Range (MHz)	2.5 to 4.0	3.5 to 6.0	5.0 to 7.0
Horizontal Length (Feet)	150	100	80

Downloaded from http://www.everyspec.com

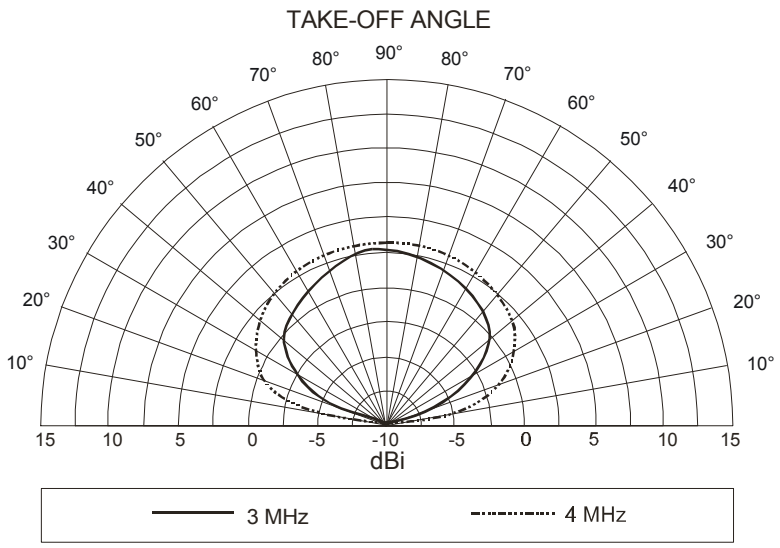

Figure 4-19. 40-Foot Inverted L (Vertical Pattern), 150 Feet Long.

Orient the antenna like a dipole (i.e., the broad side of the antenna should be toward the distant station). These lengths should not be used outside the frequency ranges specified because the antenna radiation pattern changes, and for frequencies much removed from the range, the antenna will become directional off the wire end. (See the sloping wire paragraphs on page 4-34 for using this directional characteristic.) The inverted L antenna can be used as a substitute for the dipole; however, it has less gain than a dipole, and its radiation pattern varies with frequency (unlike a dipole). Figures 4-19,

Downloaded from http://www.everyspec.com

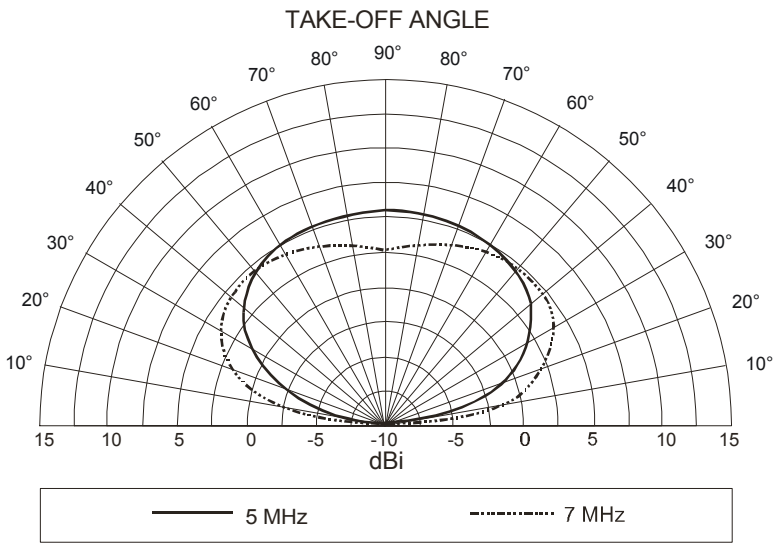

Figure 4-20. 40-Foot Inverted L Antenna (Vertical Pattern), 80 Feet Long.

4-20, and 4-21 on page 4-28 illustrate vertical patterns of various inverted L antennas. Characteristics are—

Frequency range:	Less than 2:1 over design frequency
Polarization:	Vertical from vertical section Horizontal from horizontal section
Power capability:	1,000 watts
Radiation pattern	
Azimuthal (bearing):	Omnidirectional
Vertical (take-off angle):	See figures 4-19, 4-20, and 4-21 on page 4-28

Downloaded from http://www.everyspec.com

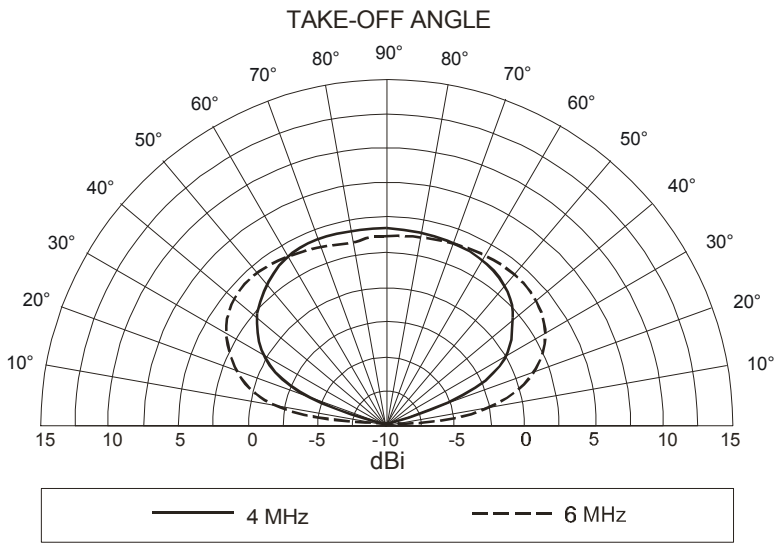

Figure 4-21. 40-Foot Inverted L (Vertical Pattern), 100 Feet Long.

Sloping Vee

The sloping vee is a medium- to long-range sky wave antenna that is simple to construct in the field. Antenna gain and directivity depend on the leg length. For reasonable performance, the antenna

Downloaded from http://www.everyspec.com

should be at least one wavelength long, but preferably several wavelengths long (see fig. 4-22).

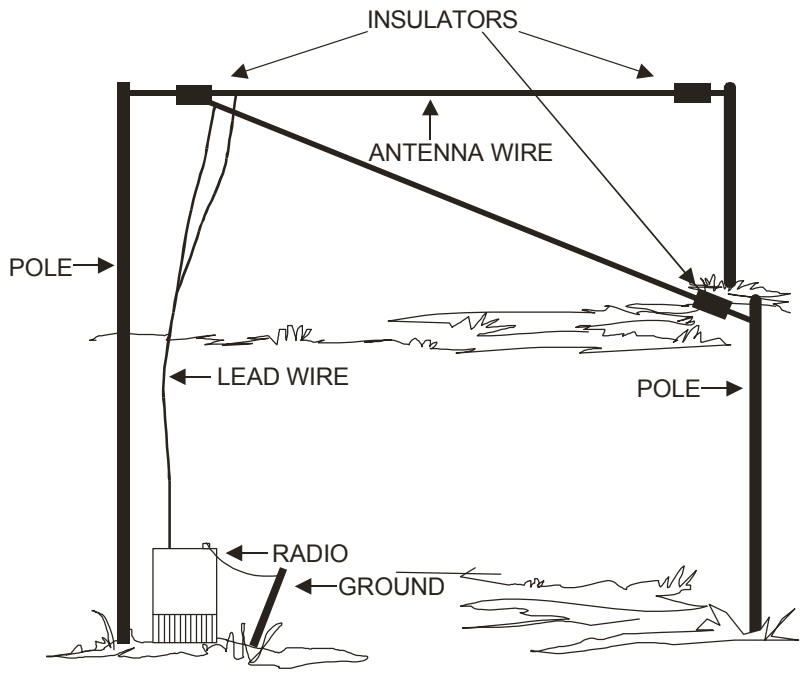

Figure 4-22. Sloping Vee Antenna.

Downloaded from http://www.everyspec.com

A compromise tactical sloping vee can be constructed using 500-foot legs and a 40-foot support mast. The angle between the two legs is adjusted to provide maximum radiation at the desired take-off angle. Table 4-6 shows the angles between legs (apex angle) that will give poor results for the distances indicated.

Table 4-6. Angle Between Antenna Legs for Poor Results.

Path Length (Miles)	700 to 1000	1000 to 1500	over 1500
Apex Angle (Degrees)	60	45	30

To make the antenna directional, use terminating resistors on each leg on the open part of the vee. The terminating resistors should be 300 ohms and be capable of handling one-half of the transmitter's power output. These terminations are either procured or fabricated locally using supply system parts (100-watt, 106-ohm resistor). Using the terminating resistors, the antenna is aimed so that the line cutting the vee in half is pointed at the distant station.

Downloaded from http://www.everyspec.com

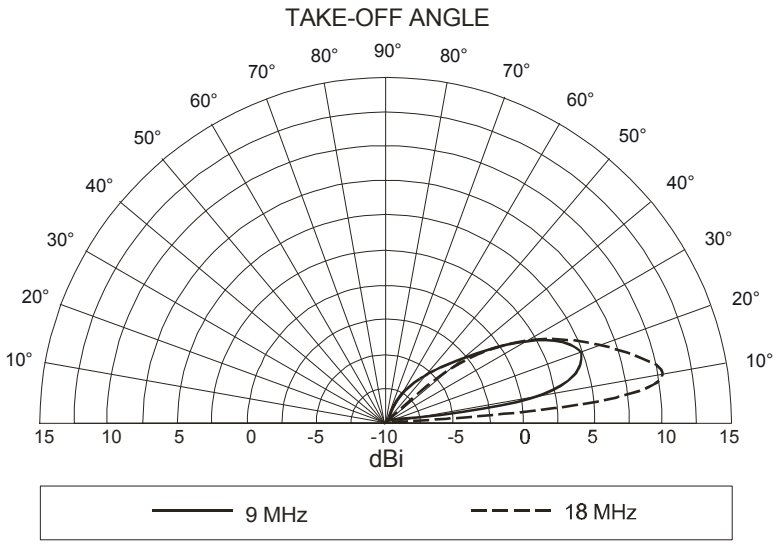

Figure 4-23. 40-Foot Sloping Vee (Vertical Pattern), 500 Feet Long, 30° Apex Angle.

The sloping vee is normally fed with a 600-ohm, open-wire feed line. One side of the feed line is connected to one leg with the other side connected to the other leg. The open-wire feed line can be connected to a 12 to 1 balun, which is then connected to standard coaxial cable. Figures 4-23, 4-24 on page 4-32, and 4-25 on page 4-33 illustrate the vertical patterns for various sloping vee antennas.

Downloaded from http://www.everyspec.com

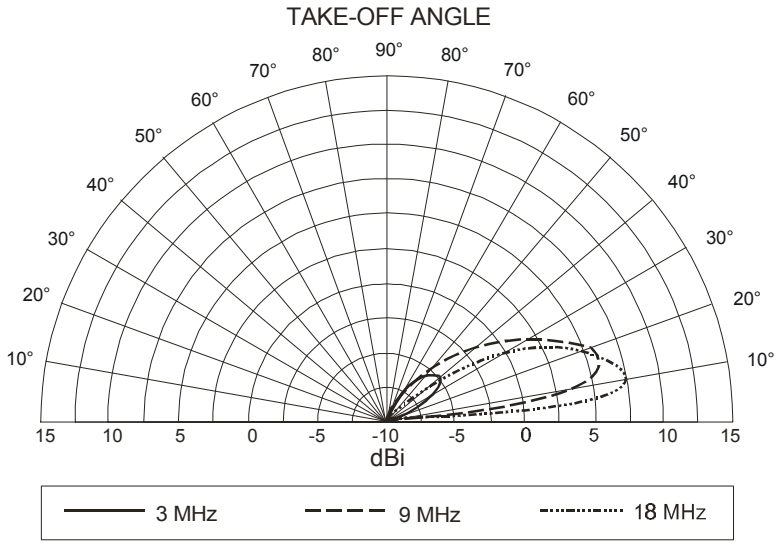

Figure 4-24. 40-Foot Sloping Vee Antenna (Vertical Pattern), 500 Feet Long, 45° Apex Angle.

Characteristics are—

Frequency range:	3 to 30 MHz
Polarization:	Horizontal
Power capability:	Depends on terminating resistors
Radiation pattern	
Azimuthal (bearing):	Directional (20° either side of direction of radiation)
Vertical (takeoff angle):	See Figures 4-23, 4-24 on page 4-32, and 4-25 on page 4-33

Downloaded from http://www.everyspec.com

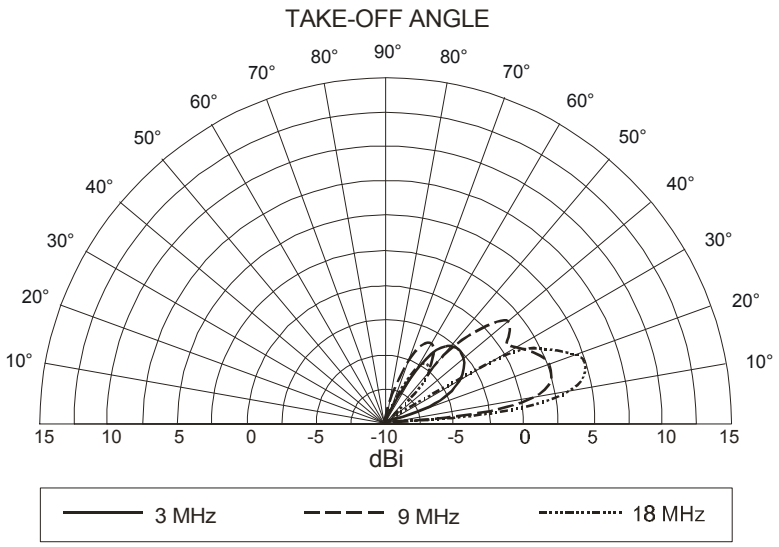

Figure 4-25. 40-Foot Sloping Vee Antenna (Vertical Pattern), 500 Feet Long, 60° Apex Angle.

Sloping Wire

The sloping wire antenna is simple and easy to construct. It requires only one support (see fig. 4-26 on page 4-34). A version of the long wire antenna, the sloping wire produces best results when it is long compared to a wavelength. Tactical sloping wires vary in length from 45 to over 500 feet. The shorter lengths perform rather poorly and should be used only when no other antenna can be erected. The

Downloaded from http://www.everyspec.com

longer lengths (e.g., 250 feet, 500 feet) can produce good radiation for medium to long sky wave paths.

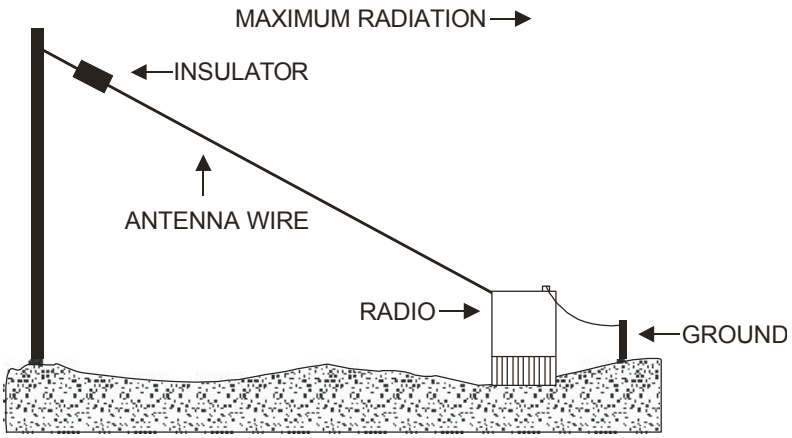

Figure 4-26. Sloping Wire.

A sloping wire can be either terminated or unterminated. If available, use 600-ohm termination because this makes the antenna impedance fairly constant, and a balun can be used to match the antenna to a transmitter. If the antenna is unterminated, use a coupler to match the transmitter to the antenna.

The low end of the wire should be oriened toward the receiving station. If the wire is unterminated, feed the antenna at the low end. If a terminating resistor is used, feed the antenna low end. Figure 4-27 and figures 4-28 and 4-29 on page 4-36 illustrate the vertical patterns for various sloping wire antennas.

Downloaded from http://www.everyspec.com

Characteristics are—

Frequency range:	Depends on wire length/configuration
Polarization:	Vertical
Power capability:	Determined by terminating resistor
Radiation pattern	
Azimuthal (bearing):	Bidirectional for unterminated Directional for terminated
Vertical (take-off angle):	See figure 4-27 and figures 4-28 and 4-29 on page 4-36

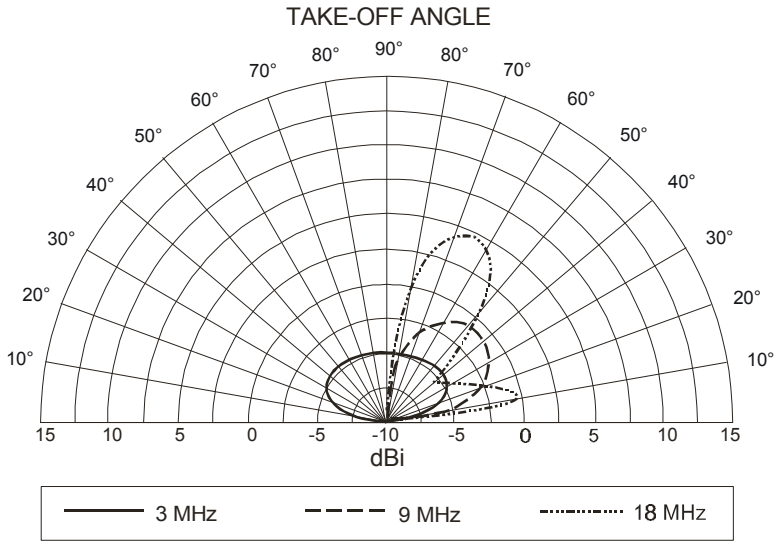

Figure 4-27. 100-Foot Sloping Wire (Vertical Pattern).

Downloaded from http://www.everyspec.com

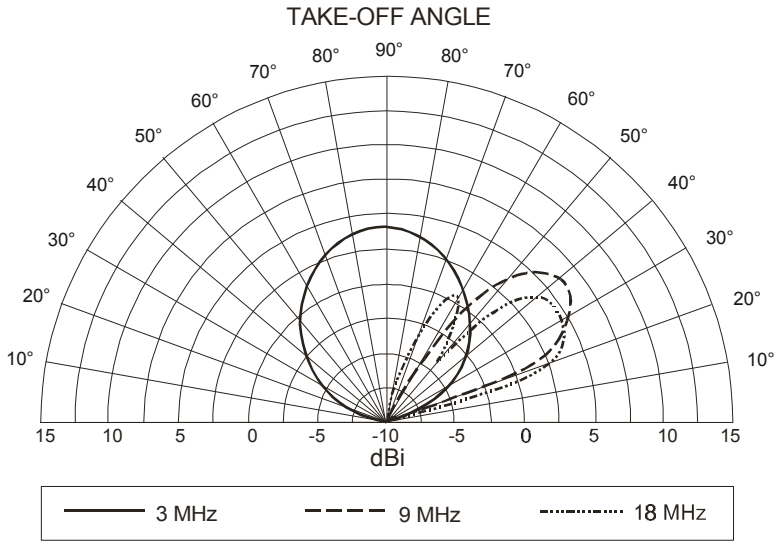

Figure 4-28. 250-Foot Sloping Wire (Vertical Pattern).

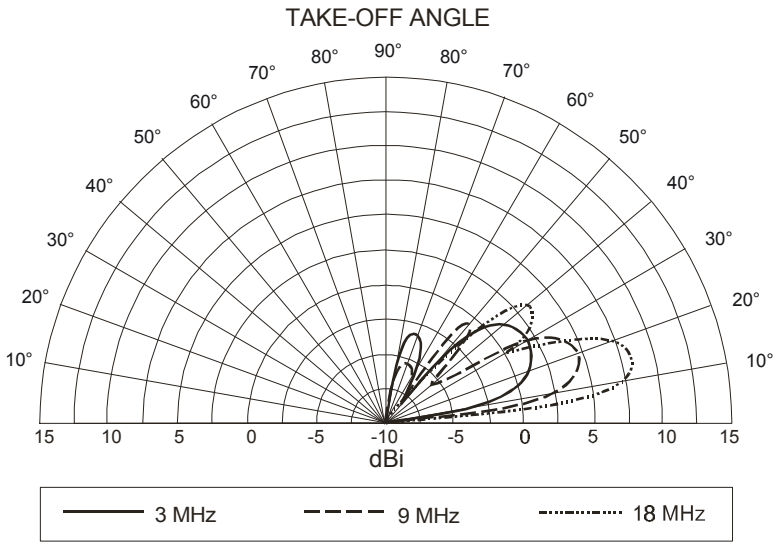

Figure 4-29. 234-Foot Sloping Wire (Vertical Pattern).

Downloaded from http://www.everyspec.com

Vertical Half-Rhombic

The vertical half-rhombic antenna is a version of the long wire antenna that uses a single center support (see fig. 4-30). Easily constructed, this antenna has a narrow width (as wide as the center support guys), which allows several to be installed in a relatively narrow area. The vertical half-rhombic antenna radiates a medium- to low-angle signal, making it a good choice for medium- to long-range sky wave circuits. Normally, the 500-foot version is the maximum length of antenna that most tactical situations will allow; however, the vertical radiation pattern for a 1,000-foot version is included, so that if the opportunity exists, the antenna can be used for excellent results.

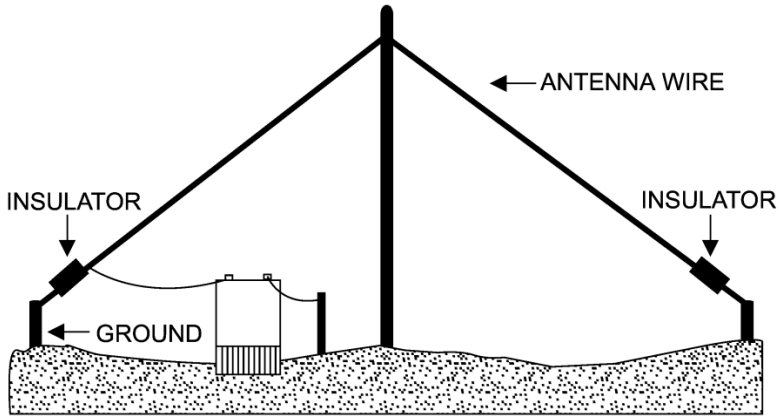

Figure 4-30. Vertical Half-Rhombic Antenna.

Downloaded from http://www.everyspec.com

The vertical half-rhombic uses a single wire feed either through a coupler or a balun (12 to 1). One of the two terminals of the coupler or balun is attached to the antenna, while the other terminal is grounded. Like other terminated antennas, the terminating resistor (600 ohms) should be able to handle one-half of the transmitter's power output. Terminators can be procured or fabricated locally (100-watt, 106-ohm resistor).

The orientation of this antenna depends on the frequency bands being worked. Below 12 MHz, point the terminated end of the antenna at the distant station; above 12 MHz, aim the antenna 10 feet to either side of the distant station. Figures 4-31 and 4-32 illustrate the vertical patterns for various vertical half-rhombic antennas. Characteristics are—

Frequency range:	2 to 30 MHz
Polarization:	Vertical
Power capability:	Determined by terminating resistor
Radiation pattern	
Azimuthal (bearing):	Directional
Vertical (take-off angle):	See Figures 4-31 and 4-32

Downloaded from http://www.everyspec.com

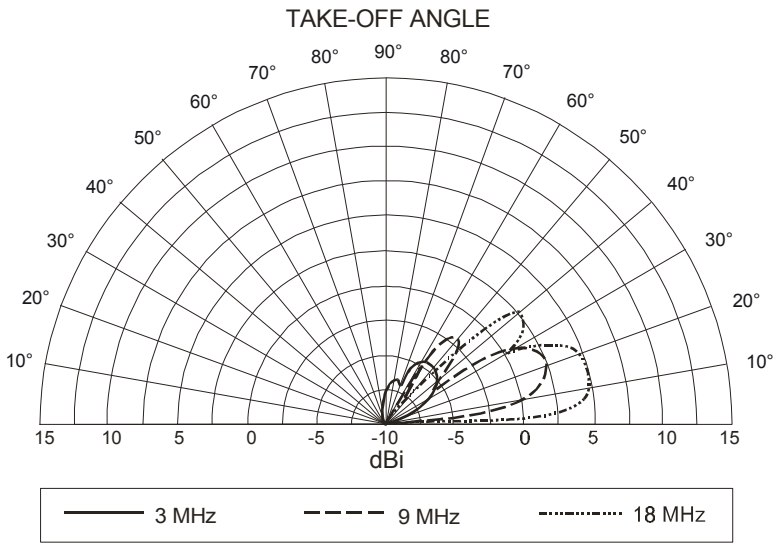

Figure 4-31. 50-Foot Vertical Half-Rhombic (Vertical Pattern), 500 Feet Long.

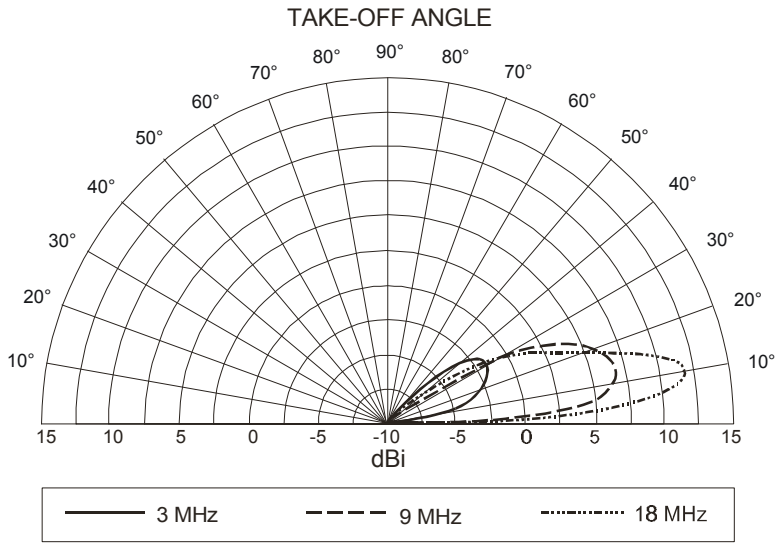

Figure 4-32. 50-Foot Vertical Half-Rhombic (Vertical Pattern), 1,000 Feet Long.

Downloaded from http://www.everyspec.com

HF NVIS COMMUNICATIONS

NVIS propagation is simply sky wave propagation that uses antennas with high-angle radiation and low operating frequencies. Just as the proper selection of antennas can increase the reliability of a long- range circuit, short-range communications also require proper antenna selection. NVIS propagation is one more weapon in the communicator's arsenal.

To communicate over the horizon to an amphibious ship on the move, or to a station 100 to 300 kilometers away, the operators should use NVIS propagation. The ship's low take-off angle antenna is designed for medium and long-range communications. When the ship's antenna is used, a skip zone is formed. This skip zone is the area between the maximum ground wave distance and the shortest sky wave distance where no communications are possible. Depending on operating frequencies, antennas, and propagation conditions, this skip zone can start at roughly 20 to 30 kilometers and extend out to several hundred kilometers, preventing communications with the desired station.

NVIS propagation uses high take-off angle (60° to 90°) antennas to radiate the signal almost straight up. The signal is then reflected from the ionosphere and returns to Earth in a circular pattern all around the transmitter. Because of the near-vertical radiation angle, there is no skip zone. Communications are continuous out to several hundred kilometers from the transmitter. The nearly vertical angle of radiation also means that lower frequencies must be used. Generally, NVIS propagation uses frequencies up to 8 MHz.

The steep up and down propagation of the signal gives the operator the ability to communicate over nearby ridge lines, mountains, and dense vegetation. A valley location may give the operator terrain shielding from hostile intercept and also protect the circuit from

Downloaded from http://www.everyspec.com

ground wave and long-range sky wave interference. Antennas used for NVIS propagation need good high take-off angle radiation with very little ground wave radiation (see fig. 4-33).

Using the HF antenna selection matrix (table 4-4 on page 4-8), the AS-2259/GR and half-wave dipole are the only antennas listed that meet the requirements of NVIS propagation. While the inverted vee and inverted L antennas have high-angle radiation, they also can have strong ground wave radiation that could interfere with the close-in NVIS communications. These antennas could be used if terrain shielding prevented the ground wave signal from propagating to the distant station.

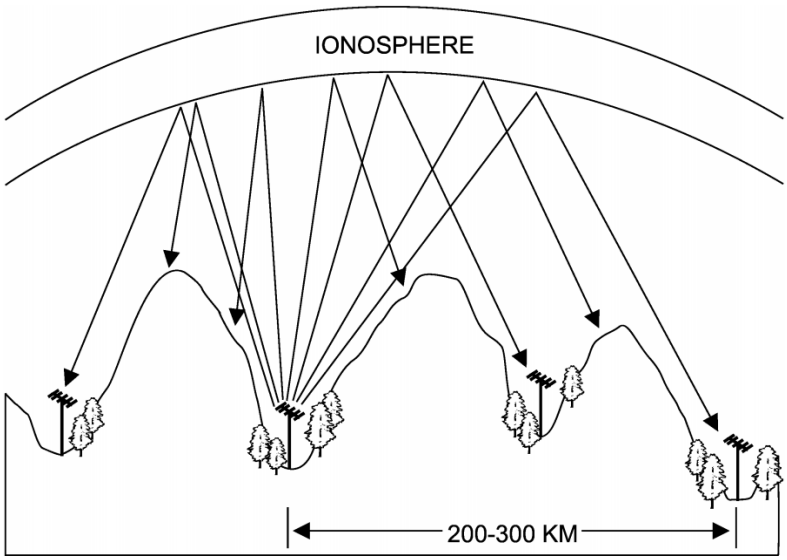

Figure 4-33. NVIS Propagation.

Downloaded from http://www.everyspec.com

The dipole antenna pattern is illustrated in figures 4-11 and 4-12 on page 4-17 and figure 4-13 on page 4-19. The patterns for 3 and 9 MHz show that large amounts of energy are directed up in the 60° to 90° range. Also, the pattern is the same on both sides of the 90° line. This means that a low dipole would be a good antenna for NVIS propagation. The pattern at 18 MHz is not important because NVIS propagation normally does not use frequencies much above 8 MHz. Set up dipoles on whatever supports are available. Ensure that the height is below a quarter-wavelength, which at 8 MHz is about 30 feet.

Mobile CPs do not always have time to set up a dipole antenna or an AS-2259/GR. Several options are possible. If a Marine is in an MRC-138 vehicle, then use a tilt whip adapter and the 16-foot whip antenna to try to obtain high-angle radiation (fig. 4-34). Tilt the antenna at least 30°. Another option is disconnecting the whip antenna and connecting a 32-foot wire to the antenna base. Run the wire parallel to the ground, and stake it at the distant end the same height above the ground as the radio end. Insulate the staked end from the ground to prevent radio damage (fig 4-35).

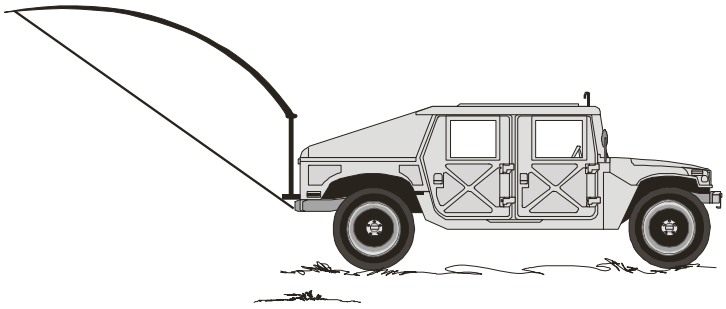

Figure 4-34. AN/MRC-138 with NVIS Antenna.

Downloaded from http://www.everyspec.com

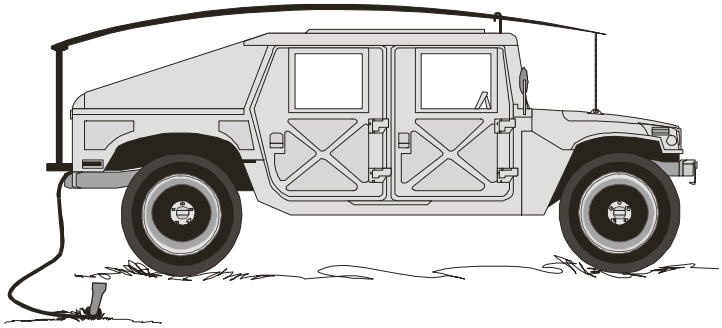

Figure 4-35. AN/MRC-138 with Stationary NVIS Antenna.

WARNING

THE WIRE MUST BE PROTECTED SO THAT MARINES DO NOT WALK INTO IT. IT CARRIES ENOUGH RF ENERGY DURING TRANSMISSION TO CAUSE SEVERE INJURIES.

When using a manpack radio like the AN\PRC-104, the whole radio can be rotated so that the 8-foot antenna is tilted at least 30°. Because of the antenna's flexibility, it will need support on the far end. This support must be a good insulator. Ensure that Marines keep clear of the antenna. Characteristics are—

Frequency range:	2 to 30 MHz
Polarization:	Vertical or horizontal
Power capability:	100 to 400 Watts
Radiation pattern	
Azimuthal (bearing):	Basically omnidirectional
Vertical (take-off angle):	Minimizes skip zone using 90°, 40°, and 20° take-off angle

(reverse blank)

Downloaded from http://www.everyspec.com

Chapter 5

VHF and UHF Antenna Selection

FREQUENCIES

The VHF portion of the radio spectrum extends from 30 to 300 MHz. The UHF range reaches from 300 to 3,000 MHz (3 GHz). Both frequency ranges are extremely useful for short-range (less than 50 km) communications. This includes point-to-point, mobile, air-to-ground, and general purpose communications. A wavelength at these frequency ranges is considerably shorter than those in the HF range, and simple antennas are much smaller.

Because the VHF and UHF antennas are small, it is possible to use multiple radiating elements to form arrays, which provide a considerable gain in a given direction or directions. An array is an arrangement of antenna elements, usually dipoles, used to control the direction in which most of the antenna's power is radiated.

Generally, many more types of antennas are available and useful in the VHF and UHF range than at HF. Several of these types will be discussed in this chapter since they are useful for various field applications.

Within the VHF and UHF portion of the spectrum, there are several subfrequency bands for specific uses. The 118 to 136 MHz range is generally reserved on a worldwide basis for air-to-ground communications and is known as the VHF aircraft band. The 225 to 400 MHz range is also allocated for air-to-ground use and is known as the UHF aircraft band. The 148 to 174 MHz and 450 to 470 MHz

Downloaded from http://www.everyspec.com

ranges are assigned to many activities, including citizens (public) communications (e.g., mobile, police, weather, taxis, and general purpose).

POLARIZATION

In many countries, FM and TV broadcasting in the VHF range use horizontal polarization. One reason is because it reduces ignition interference, which is mainly vertically polarized. Mobile communications often use vertical polarization for two reasons. First, the vehicle antenna installation has physical limitations, and second, so that reception or transmission will not be interrupted as the vehicle changes its heading to achieve omnidirectionality.

Using directional antennas and horizontal polarization (when possible) will reduce manmade noise interference in urban locations. Horizontal polarization, however, should be chosen only where an antenna height of many wavelengths is possible. Ground reflections tend to cancel horizontally polarized waves at low angles. Use only vertically polarized antennas when the antenna must be located at a height of less than about 10 meters above ground, or where omnidirectional radiation or reception is desired.

GAIN AND DIRECTIVITY

VHF and UHF (above 30 MHz) antenna gain and directivity are extremely important for several reasons. Assuming the same antenna gain and propagation path, the received signal strength drops as frequency is increased. At VHF and UHF, more of the received signal is lost in the transmission line than is lost at HF. A 10 to 20 dB loss is not uncommon in a 30 meter length of coaxial line at 450 MHz.

Downloaded from http://www.everyspec.com

At frequencies below 30 MHz, system sensitivity is almost always limited by receiver noise rather than by noise external to the antenna (e.g., atmospheric and manmade interference). Generally, wider modulation or signal bandwidths are employed in VHF and UHF transmissions than at HF. Since system noise power is directly proportional to bandwidth, additional antenna gain is necessary to preserve a usable S/N ratio.

VHF and UHF antenna directivity (gain) aids security by restricting the amount of power radiated in unwanted directions. Receiver sensitivity is generally poorer at VHF and UHF (with the exception of high quality state-of-the-art receivers). Obstructions (e.g., buildings, trees, hills) may seriously decrease the signal strength available to the receiving antenna because VHF and UHF signals travel a straight LOS path.

Gain

Obtaining communications reliability over difficult VHF and UHF propagation paths requires considerable attention to the design of high-gain, directive antenna arrays at least at one end of the communications link. Unlike HF communications, the shorter VHF and UHF wavelengths support walkie-talkie transceivers and simple mobile transmission units. Communicating or receiving with such devices over distances beyond 1 or 2 km requires maximum antenna gain at the base station site or fixed end of the link.

Directivity

Because VHF and UHF wavelengths are so short, reliable prediction of diffraction, refraction, and reflection effects are not practical. One must depend entirely on LOS paths. For best results, attempt to establish VHF and UHF communications paths that are as free of obstacles as possible. The VHF and UHF wavelengths are

Downloaded from http://www.everyspec.com

short enough that it is possible to construct resonant antenna arrays. An array provides directivity (the ability to concentrate radiated energy into a beam that can be aimed at the intended receiver). Arrays of resonant elements, (e.g., half-wave dipoles), can be constructed of rigid metal rods or tubing or of aluminum or copper foil laid out or pasted on a flat nonconducting surface. Directing power helps to increase the range of the communications path and tends to decrease the likelihood of interception or jamming from hostile radio stations. However, such highly directive antennas place an added burden on the operator to ensure that the antenna is pointed properly.

TRANSMISSION LINES

Choosing transmission lines at VHF and UHF depends on many factors. Generally, twin-lead has much lower loss than small diameter coaxial cable. Twin-lead is preferred over coaxial when transmission line lengths exceed 10 meters. Twin-lead is much more susceptible to picking up objectionable manmade noise than is well shielded coaxial cable. Also, most modern VHF and UHF equipment employs unbalanced input and output circuitry with a 50-ohm impedance. Such equipment requires either using coaxial cable or a balun to feed a twin-lead or two-wire balanced transmission line. Noise pickup by twin-lead transmission lines may be considerably reduced by twisting the line along its length.

When using twin-lead, the spacing between the wires of the line should not exceed 0.05 λ. If the spacing is an appreciable part of a wavelength, the line will radiate and receive energy like the antenna. This effect will alter the intended antenna radiation pattern. To further reduce local noise pickup, keeping twin-lead clear of metal objects (e.g., gutters and window frames). Twice the wire spacing in the twin-lead is sufficient clearance.

Downloaded from http://www.everyspec.com

RADIATORS

A radiator is the antenna component that transmits RF energy.

Vertical Radiator

A vertical radiator for general coverage use at UHF should be one-quarter wavelength long. Longer vertical antennas do not have their maximum radiation at right angles to the line of the radiator. They are not practical for use where the greatest possible radiation parallel to the Earth is desired. It is important that the antenna be decoupled from the coaxial transmission line. This will prevent unwanted radiation currents from flowing along the outside of the cable, which will distort the antenna pattern. Use a sleeve, ground plane, or counterpoise to perform decoupling.

Cross Section Radiator

Aluminum tubing is commonly used for dipoles and radiation elements. They are so short that the expense of larger diameter conductors is relatively low. With such conductors, the antenna will tune much more broadly. This is very desirable, particularly when an antenna or array is used over an entire frequency band.

Large cross section radiators have a shorter resonant length than a radiator or mode of small diameter wire. A tubing radiator mode is seldom longer than 90 percent of a half-wavelength for a dipole at frequencies above 100 MHz.

INSULATION

Insulation or dielectric material quality is more important at VHF and UHF than at frequencies below 30 MHz. Many insulators that perform well in the HF range are poor or unusable for fabricating

Downloaded from http://www.everyspec.com

antennas operating at frequencies above 100 MHz. Ordinary wood is a good example. In minimal rainfall climates, using very dry redwood, maple, or fir boiled in paraffin wax for several hours is fairly successful up to frequencies as high as 560 MHz. The neck of a glass soft drink bottle or other similar items work reasonably well up to frequencies as high as 1 GHz. Several modern plastics, used throughout the world, also make excellent insulators (e.g., fiberglass, polystyrine, polyethylene, and Styrofoam). Pieces of these plastics in usable shapes can be found almost everywhere, and, with a little ingenuity, can be used as insulation in the design of many VHF and UHF antennas. Avoiding insulation entirely is possible by choosing an antenna design with elements supported at lower voltage (high current) points (e.g., the Yagi antenna).

INTERFERENCE

Obtaining optimum coupling between the antenna and transmission line and between the transmission line and the receiver or transmitter circuits is a major concern.

Noise

While atmospheric and manmade noise usually limit the ultimate sensitivity of an HF receiving system, a VHF or UHF receiving system is almost always limited by receiver noise. External (atmospheric) noise is virtually nonexistent at frequencies higher than 100 MHz. Automobile ignition and other forms of manmade static affect frequencies well into the UHF band.

Multipath Interference

VHF and UHF radio waves are highly attenuated when they travel through most materials. Select a location which is as free as possible of obstacles in the direction of desired propagation. It is possible

Downloaded from http://www.everyspec.com

to use relay stations or carefully placed reflectors when obstacles interfere with the direct path.

When operating from areas where the transmission path is bounded rather closely by reflective objects (e.g., buildings or metal towers) the possibility of multipath exists. Whenever conditions are such that radio signals travel two or more separate paths from the transmitting to the receiving antenna, a phenomenon known as an interference pattern is created around the receiving antenna. There will be zones where the incoming signal is received very strongly (constructive interference) with areas of weak signal between (destructive interference). If each of the two signal has the same strength, complete cancellation will occur in the destructive interference zones, and no signal will be received. At VHF and UHF the created interference patterns are small enough to permit moving out of a destructive zone and into a constructive zone within the space of only a meter or so.

It is difficult to predict the location of an interference pattern. Optimizing antenna location is a must for good results. Sometimes a secondary path is created as the result of reflection from a moving object (e.g., an automobile or airplane). The resulting interference pattern will not be stationary, but will move past the antenna so that the received signal appears to flutter between good and poor reception. Multipath problems can be particularly severe when either the transmitting or receiving antenna is moving. Diversity techniques such as two separated antennas or circular polarization should help to alleviate the effects of multipath interference. High gain (highly directive) antennas, both on the transmitter and the receiver, can reduce signal loss from multipath interference.

Downloaded from http://www.everyspec.com

Vegetated Areas

VHF and UHF communications through a dense forest over distances of more than a few kilometers can often be very difficult. In many tropical regions, trees and underbrush absorb VHF and UHF radio energy. In addition to the ordinary free space loss between transmitting and receiving antennas, a radio wave passing through a forest undergoes an additional loss that is measured in dBs per km. This extra loss increases rapidly as the transmission frequency increases.

Near the ground (i.e., antenna heights of less than 3 meters) vertical polarization is preferred. However, if it is possible to elevate both receiving and transmitting antennas as much as 10 to 20 meters, horizontal polarization is preferable to vertical polarization. Considerable reduction in total path loss results if either or both the transmitting and receiving antennas can be placed above the tree level through which communications must be made.

Increasing antenna gain may provide an improved signal strength that exceeds the added antenna gain by reducing the number of multipath reflections from trees along the propagation path. The higher gain antenna exhibits a much narrower radiation pattern which includes fewer trees in its beam. Generally, this effect is most noticeable with antenna gains higher than 15 dB or azimuthal half-power beam of less than 35°.

Communications through heavily forested areas over distances greater than 10 kms may require a transmitter power of at least 10 watts and antenna gains of 10 dB or more, depending on antenna height, terrain features, type of trees, moisture content, and numerous other factors. If communication is required over distances

Downloaded from http://www.everyspec.com

exceeding 30 kms, it may be necessary to use high-angle ionospheric propagation in the 3 to 10 MHz frequency range (i.e., HF) to obtain a reliable circuit.

ANTENNA TYPES

The vertical whip is the most commonly used antenna. The OE-254 is a broadband, omnidirectional, biconical antenna. Antennas located in places which are enclosed mostly in a metal shell or container (e.g., an automobile) cannot be expected to perform as well as if located outside the enclosure. Most of the antenna types usable in the HF range are also usable in the VHF and UHF bands. In the VHF and UHF ranges, use the same antenna for transmitting and receiving.

Vertical Whip

It is easy to use and part of every radio set. In mobile situations, it is the only antenna that can be used. In stationary operations, the vertical whip is not a good choice. It cannot be elevated for good omnidirectional VHF LOS communications, and it radiates in useless directions if communications are point-to-point.

If the tactical situation prevents using an antenna other than the vertical whip, steps can be taken to improve its performance. Ensure that the antenna is vertical. This can be a problem when using the manpack short whip or tape in the prone position. Use the flexible base on the tape to ensure that the antenna is in a vertical position.

Place a reflector behind the whip to direct radiation in a general direction. A reflector is a vertical wire or another whip placed one-quarter wavelength behind the radiating whip. Place the reflector at the same height as the whip, and insulate it from the ground. The

Downloaded from http://www.everyspec.com

reflector reflects some of the radio energy back towards the whip and provides a broad beam of energy towards the distant station. Characteristics are—

Frequency range:	30 to 88 MHz
Polarization:	Vertical
Power capability:	Matched to specific radio
Radiation pattern	
Azimuthal (bearing):	
Vertical (take-off angle):	

OE-254

The OE-254 (fig. 5-1) is scheduled to replace the RC-292. Unlike the RC-292, the OE-254 does not require tuning for specific bands and can cover the 30 to 87.975 MHz VHF band without adjustments. Three upward and three downward radial elements simulate two cones which provide omnidirectional VHF LOS radiation. The antenna is usually mounted on a 33-foot 8-inch mast for an overall height of 41 feet 9 inches. The antenna may be installed at lower heights; however, care should be taken to ensure that the lower and upper mast adapter assemblies are always used. An 80-foot coaxial cable comes with the antenna for direct connection to a radio.

Frequency range:	30 to 88 MHz
Polarization:	Vertical
Power capability:	350 watts
Radiation pattern	
Azimuthal (bearing):	Omnidirectional
Vertical (take-off angle):	

Downloaded from http://www.everyspec.com

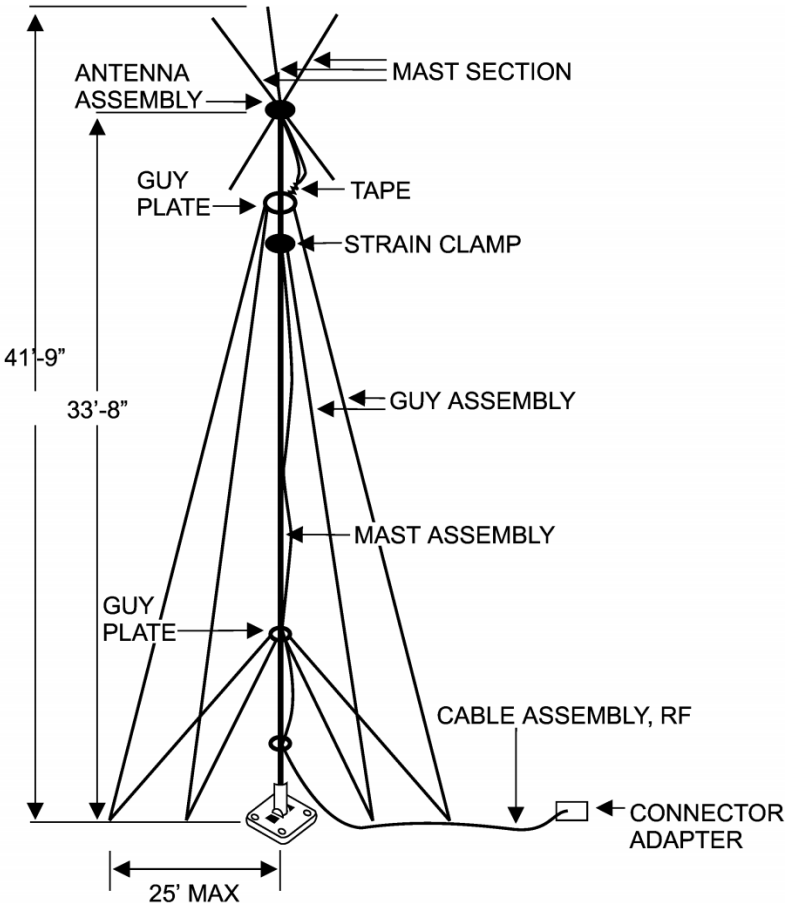

Figure 5-1. Installed OE-254 Antenna.

Downloaded from http://www.everyspec.com

Antenna Within Vehicle Interior

Antennas located inside vehicles will lose some radiation through the window openings. It is difficult to predict how much radiation will escape or how much the original antenna radiation pattern will be affected by the enclosure. The pattern modification depends on the vehicle size and its openings and on the location of the antenna inside. Select antennas which operate above the cutoff frequency of the window openings. An opening in a metal container which is less than 0.5 λ in the dimension perpendicular to the plane of polarization will be severely attenuated or cutoff as it traverses the opening. Lower frequency waves will suffer even greater attenuation.

HF Antenna Types Usable at VHF and UHF

Simple vertical half-wave dipole and quarter-wave monopole antennas are very popular for omnidirectional transmission and reception over short-range distances. For longer distances, rhombic antennas made of wire and somewhat similar in design to HF versions may be used to good advantage at frequencies as high as 1 GHz. Another HF antenna, the Yagi, is equally popular in the VHF and UHF ranges. However, while Yagis with more than three or four elements are seldom used at HF, Yagi designs with as many as 15 elements, or more, are quite common at VHF and UHF.

Dual-Function Antennas

Because there is no sure method of accurately pointing a transmitting antenna, accomplish this task by first using the antenna in reception and orienting it for the best received signal. Positioning the antenna in this manner assures that, according to the reciprocity theorem, the antenna is optimally oriented for transmitting. If two-way communications are desired (i.e., transmitting and receiving alternately) a switch to toggle quickly back and forth between transmitter and receiver is required. Design the switch so that it will not

Downloaded from http://www.everyspec.com

upset the impedance on the transmission line, causing unwanted received or transmitted power loss. When using coaxial cable as transmission line, use suitable, commercially available, low-loss coaxial antenna switching relays if possible.

In the 225 to 400 MHz and 450 to 470 MHz frequency ranges, most antennas are quite small. Mount two identical antennas, using one for transmitting and one for receiving. Separate transmission lines may then be used, eliminating the need for an antenna relay.

(reverse blank)

Downloaded from http://www.everyspec.com

Chapter 6

Field Repair and Expedients

Antennas sometimes break or sustain damage, causing poor communications or communications failure. If a spare is available, use it to replace the damaged antenna. When there is no spare, construct an expedient antenna. The following paragraphs discuss antenna and support repair and constructing and adjusting expedient antennas.

REPAIR TECHNIQUES

Whip Antennas

A broken antenna (whip) can be repaired temporarily. If the whip is broken into two sections, rejoin the sections. Remove the paint and clean the sections where they will rejoin to ensure a good electrical connection. Place the sections together, secure them with a pole or branch, and lash them with bare wire or tape above and below the break (see fig. 6-1 (A) on page 6-2).

If the whip is badly damaged, use a length of field wire (WD1/TT) the same length as the original antenna. Remove the insulation from the lower end of the field wire antenna, twist the conductors together, stick them in the antenna base connector, and secure with a wooden block. Use either a pole or a tree to support the antenna wire (see fig. 6-1 (B) on page 6-2).

Downloaded from http://www.everyspec.com

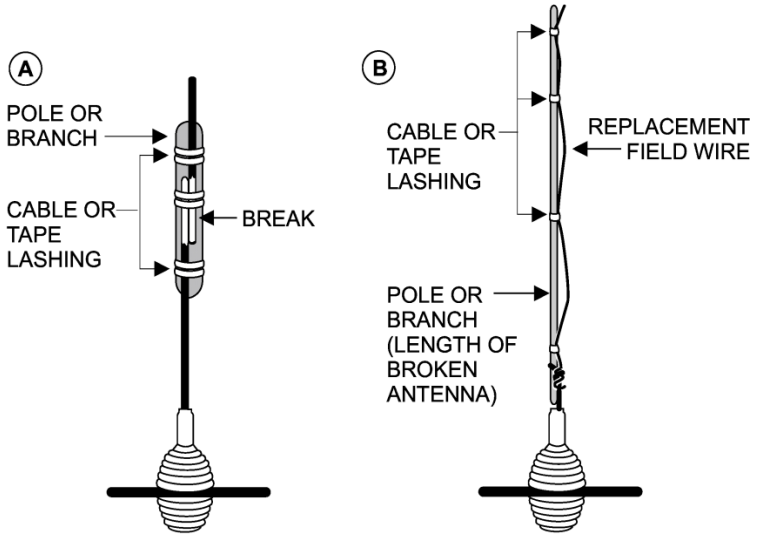

Figure 6-1. Emergency Repair of Broken Whip.

Wire Antennas

Expedient wire antenna repair may involve repairing or replacing the antenna or transmission line wire or repairing or replacing the assembly that supports the antenna. When one or more antenna wires are broken, repair the antenna by reconnecting the broken wires. Lower the antenna to the ground, clean the ends of the wires, and twist the wires together. Solder the connection if possible. If the antenna is damaged beyond repair, construct a new one. Make sure that the substitute wire is the same length as the original.

Antenna supports may also require repair or replacement. Use a substitute item in place of a damaged support. If properly insulated, any material of adequate strength can be used. If the radiating element is not properly insulated, field antennas may be shorted to ground and rendered ineffective. Many commonly found items can

Downloaded from http://www.everyspec.com

be used as field expedient insulators (fig. 6-2). The best are plastic or glass, including plastic spoons, buttons, bottle necks, and plastic bags. Less effective than plastic or glass, but better than no insulators at all, are wood and rope, or both, in that order. The radiating element—the actual antenna wire—should touch only the antenna terminal and be physically separated from all other objects, other than the supporting insulator.

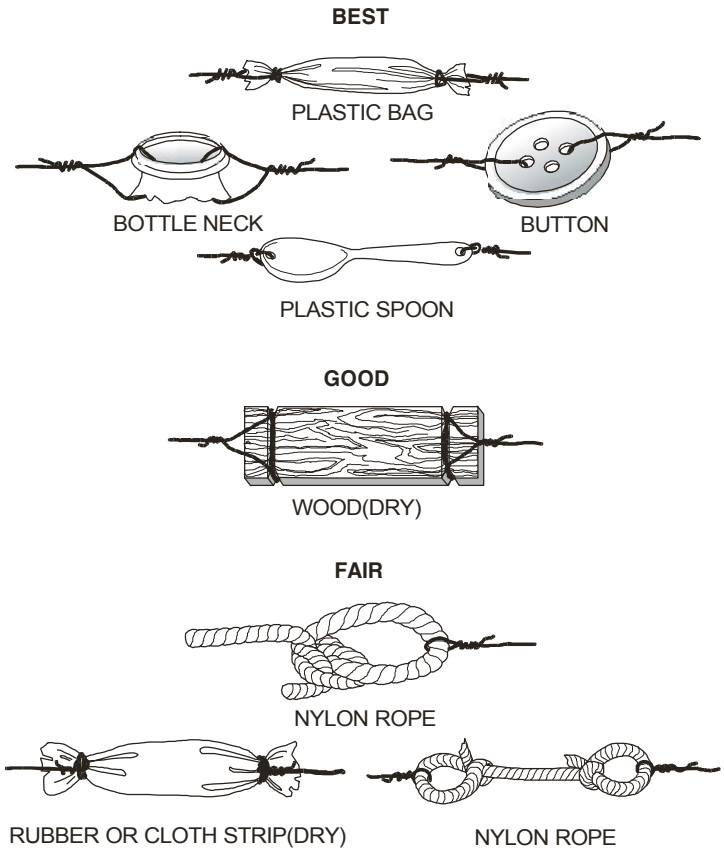

Figure 6-2. Improvised Insulators.

Downloaded from http://www.everyspec.com

Guys

Lines used to stabilize antenna supports are called guys. These lines are usually wire, manila rope, or nylon rope. If a rope breaks, repair it by tying the two broken ends together. If the rope is too short after tying, lengthen it by adding another piece of rope or a piece of dry wood or cloth. If a guy wire breaks, replace it with another piece of wire. Figure 6-3 shows how to repair a guy line with a spoon.

Masts

Some antennas are supported by masts. If a mast breaks, replace it with another mast the same length. If long poles are not available, overlap short poles and lash them with rope or wire to provide a pole of the required length. Figure 6-3 shows how to make an expedient mast repair.

TIPS ON CONSTRUCTION AND ADJUSTMENT

Constructing the Antenna

The best kinds of wire for antennas are copper and aluminum. In an emergency, use any type that is available. The exact length of most antennas is critical. An expedient antenna should be the same length as the antenna it replaces.

Antennas supported by trees can usually survive heavy wind storms if the trunk of a tree or a strong branch is used as a support. To keep the antenna taut and to prevent it from breaking or stretching as the trees sway, attach a spring or old inner tube to one end of the antenna. Another technique is to pass a rope through a pulley or eyehook, attach the rope to the end of the antenna, and load the rope with a heavy weight to keep the antenna tightly drawn.

Downloaded from http://www.everyspec.com

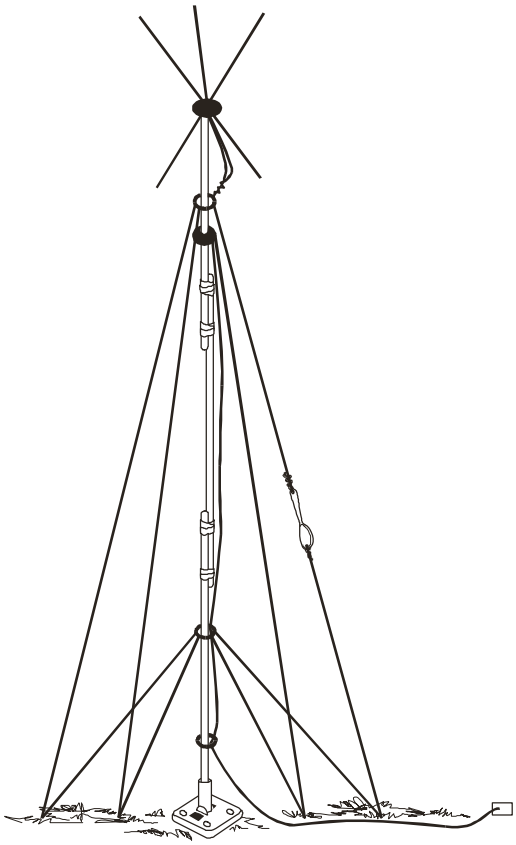

Figure 6-3. Repaired Guy Line and Mast.

Guys used to hold antenna supports are made of rope or wire. To ensure that wire guys will not affect antenna operation, cut the wire into several short lengths and connect the pieces with insulators.

Downloaded from http://www.everyspec.com

Adjusting the Antenna

An improvised antenna may change a radio set's performance. Use the following methods to determine if the antenna is operating properly.

Use a distant station to test the antenna. If the signal received from this station is strong, the antenna is operating satisfactorily. If the signal is weak, adjust the antenna and transmission line height and length to receive the strongest signal at a given receiver volume control setting. This is the best method of tuning an antenna when transmission is dangerous or forbidden.

Most Marine Corps cadets use the transmitter to adjust the antenna. Set the transmitter controls in position for normal operation. Then, tune the system by adjusting the antenna height and length and the transmission line length to obtain the best transmission output.

WARNING

SERIOUS INJURY OR DEATH CAN RESULT FROM CONTACT WITH THE RADIATING ANTENNA OR MEDIUM- OR HIGH-POWER TRANSMITTER. TURN THE TRANSMITTER OFF WHILE MAKING ADJUSTMENTS TO THE ANTENNA.

Impedance-matching a load to its source is an important consideration in transmissions' systems. If the load and source are mismatched, part of the power is reflected back along the transmission line towards the source. This reflection prevents maximum power transfer, causes erroneous measurements of other parameters, or causes circuit damage in high-power applications.

Downloaded from http://www.everyspec.com

The power reflected from the load interferes with the incident (forward) power, creating standing waves of voltages and current along the line. The ratio of standing-wave maximal to minimal is directly related to the impedance mismatch of the load. The standing-wave ratio (SWR) provides the means to determine impedance and mismatch.

FIELD EXPEDIENT ANTENNAS

VHF Considerations

SINCGARS VHF radios provide the primary means of communications means for Marine Corps forces around the world. SINCGARS radios operate in both single-channel and frequency hopping modes. It is important for CIS personnel to remember that when using SINCGARS radios in the frequency hopping mode, field expedient VHF antennas should not be used. CIS personnel should only use the whip antenna or the OE-254 antenna when operating in the frequency hopping mode.

HF Considerations

Vertical antennas are omnidirectional. They transmit and receive equally well in all directions. Most manpack portable radios use a vertical whip antenna. Improvise a by using a metal pipe or rod of the correct length, held erect by guys. Insulate the lower end of the antenna from the ground by placing it on a large block of wood or other insulating material. Support a vertical wire antenna with a tree or a wooden pole (fig. 6-4 on page 6-8). For short, vertical antennas, use the pole without guys (if properly supported at the base). If the vertical mast is too short to support the wire upright, modify the connection at the top of the antenna.

Downloaded from http://www.everyspec.com

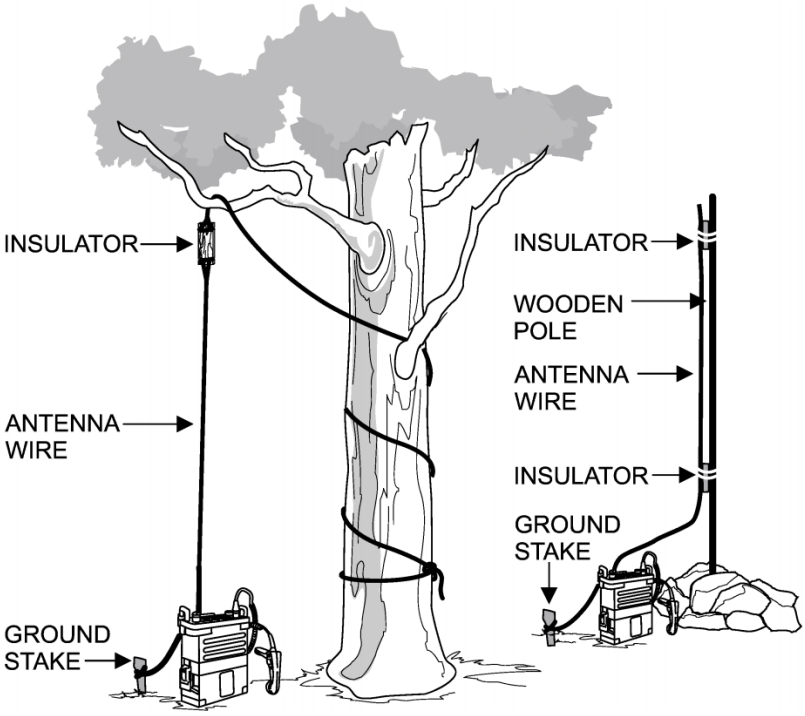

Figure 6-4. Field Substitutes for Support of Vertical Wire Atennas.

End-Fed Half-Wave Antenna

Construct an expedient, end-fed half-wave antenna from available materials (e.g., field wire, rope, and wooden insulators). This antenna's electrical length is measured from the antenna terminal on the radio set to the far end of the antenna (fig. 6-5).

Downloaded from http://www.everyspec.com

For best performance, construct the antenna longer than necessary, then shorten it, as required, until best results are obtained. Connect the radio set's ground terminal to a good Earth ground for functional efficiency.

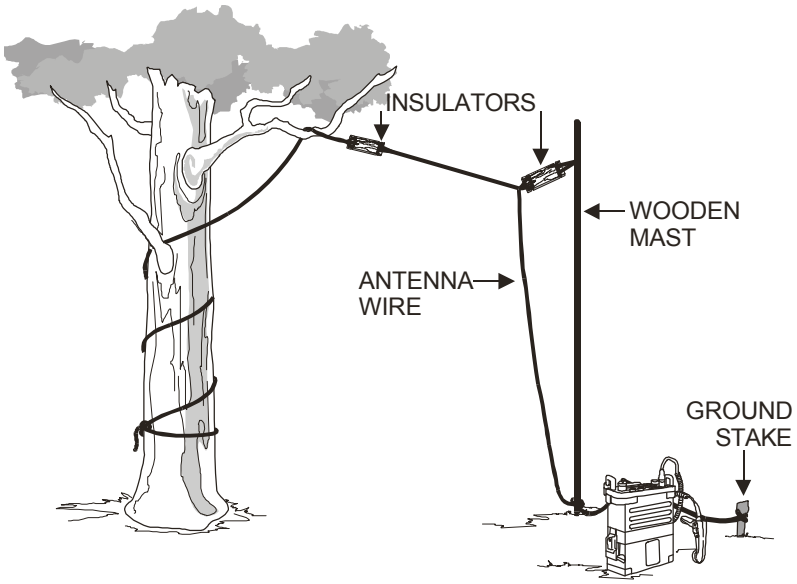

Figure 6-5. End-Fed Half-Wave Antenna.

Center-Fed Doublet Antenna

The center-fed doublet is a half-wave antenna consisting of two quarter-wavelength sections on each side of the center. See figure 6-6 on page 6-10 for constructing an improvised doublet antenna for use with FM radios.

Downloaded from http://www.everyspec.com

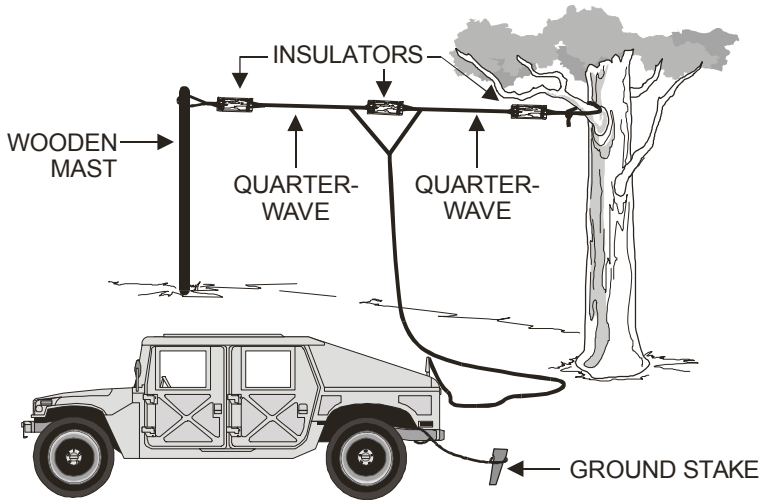

Figure 6-6. Center-Fed Doublet Antenna.

Doublet antennas are directional broadside to their length, which makes the vertical doublet antenna essentially omnidirectional. The radiation pattern is doughnut shaped. The horizontal doublet antenna is bidirectional.

Compute the length of a half-wave antenna by using the formula in chapter 4. Cut the wires as closely as possible to the correct length because the antenna wires' lengths are important.

A transmission line conducts electrical energy from one point to another and transfers the output of a transmitter to an antenna. Although it is possible to connect an antenna directly to a transmitter, the antenna generally is located some distance away. In a vehicular installation, for example, the antenna is mounted outside, and

Downloaded from http://www.everyspec.com

the transmitter is inside the vehicle. A transmission line, therefore, is necessary as a connecting link.

Center-fed half-wave FM antennas can be supported entirely by pieces of wood. See figure 6-7 (A) for a horizontal antenna of this type. See figure 6-7 (B) for a vertical antenna. These antennas can be rotated to any position to obtain the best performance. If the antenna is erected vertically, the transmission line should be brought out horizontally from the antenna for a distance equal to at least one-half of the antenna's length before it is dropped down to the radio set.

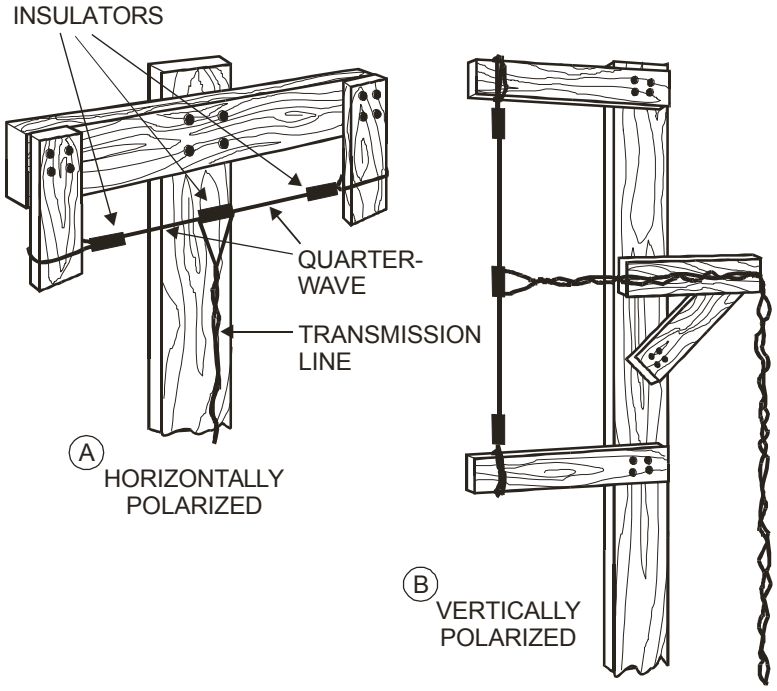

Figure 6-7. Center-Fed Half-Wave Antenna.

Downloaded from http://www.everyspec.com

A short, center-fed half-wave antenna is shown in figure 6-8. The antenna ends are connected to a piece of dry wood (e.g., a bamboo pole). The bend in the pole holds the antenna wire straight. Another pole, or bundle of poles, serves as the mast.

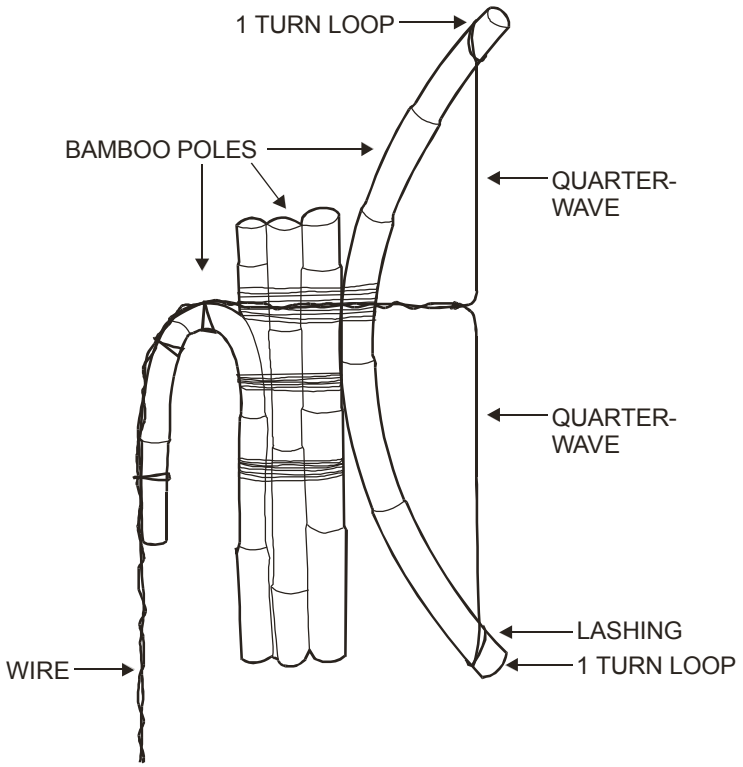

Figure 6-8. Bent Bamboo Antenna.

Figure 6-9 shows an improvised vertical half-wave antenna. This technique is used primarily with FM radios. In heavily wooded areas it is effective for increasing the range of portable radios. The

Downloaded from http://www.everyspec.com

top guy wire can be connected to a limb or passed over the limb and connected to the tree trunk or a stake.

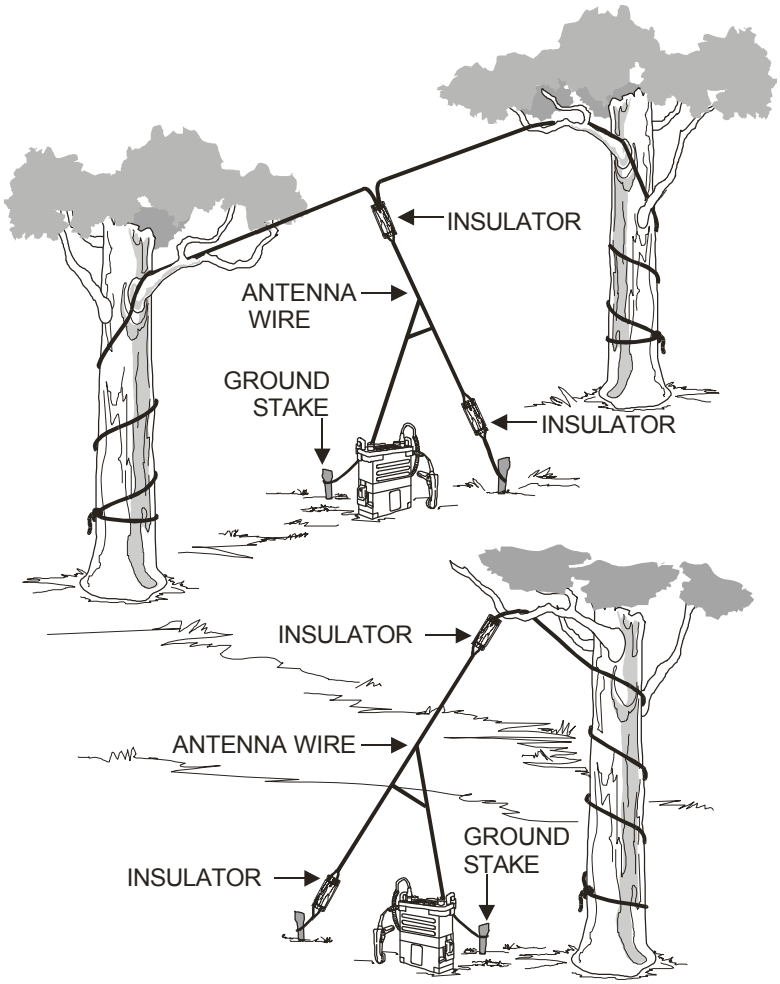

Figure 6-9. Improvised Vertical Half-Wave Antenna.

Downloaded from http://www.everyspec.com

FIELD EXPEDIENT DIRECTIONAL ANTENNAS

The vertical half-rhombic, the long wire, and the yagi are field expedient directional antennas.

Vertical Half-Rhombic and Long-Wire Antennas

The vertical half-rhombic antenna (fig. 6-10) and the long-wire antenna (fig. 6-11) radiate a directional pattern and primarily transmit or receive HF signals. They consist of a single wire, preferably two or more wavelengths, supported on poles at a height of 3 to 7 meters (10 to 20 feet) above the ground. The antennas also operate satisfactorily as low as 1 meter (approximately 3 feet) above the ground. Connect the far end of the wire to a ground through a non-inductive 500- to 600-ohm resistor. To ensure the transmitter's output power does not burn out the resistor, use a resistor that is rated at least one-half the wattage output of the transmitter. Use a reasonably good ground (e.g,. a number of ground rods or a counterpoise) at both antenna ends.

Yagi Antenna

The Yagi antenna (fig. 6-12) is a dipole with an additional wire behind it (reflector) and an additional wire in front of it (director).

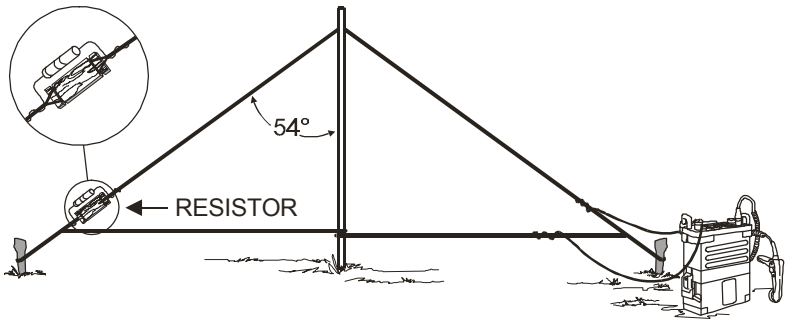

Figure 6-10. Vertical Half-Rhombic Antenna.

Downloaded from http://www.everyspec.com

These additional wires increase the power to the front of the antenna while decreasing the power to the rear.

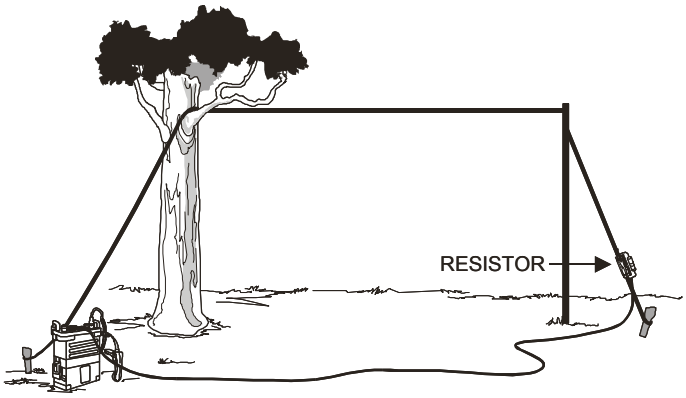

Figure 6-11. Long Wire Antenna.

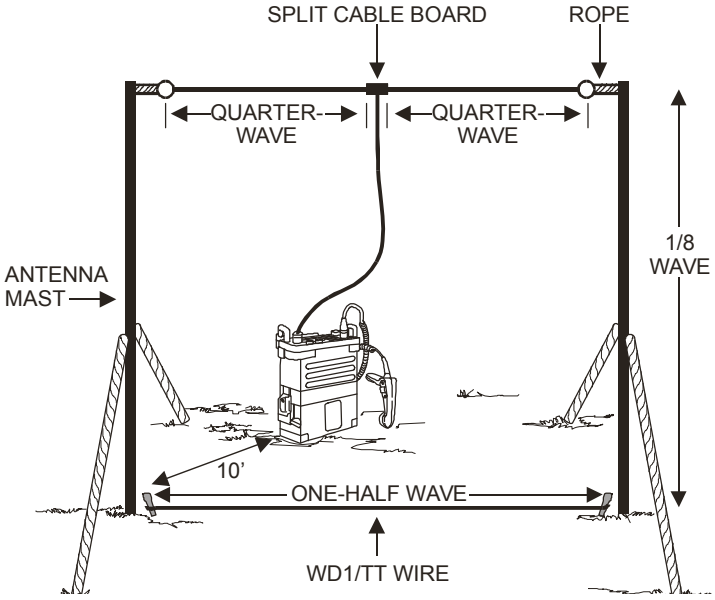

Figure 6-12. Yagi Antenna.

Downloaded from http://www.everyspec.com

Vee Antenna

The vee antenna is another field expedient, directional antenna. It consists of two wires forming a vee with the open area of the vee pointing in the desired direction of transmission or reception (see fig. 6-13). The antenna must be fed by a balanced transmission line.

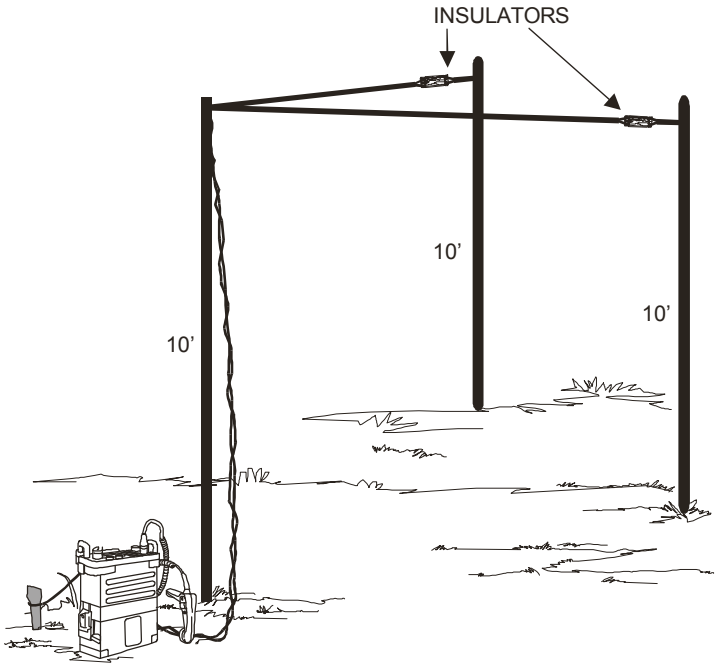

Figure 6-13. Vee Antenna.

Sloping Vee Antenna

To simplify construction, the legs may slope downward from the apex of the vee (this is called a sloping vee antenna [see fig. 6-14]).

Downloaded from http://www.everyspec.com

The angle between the legs varies with the length of the legs in order to achieve maximum performance.

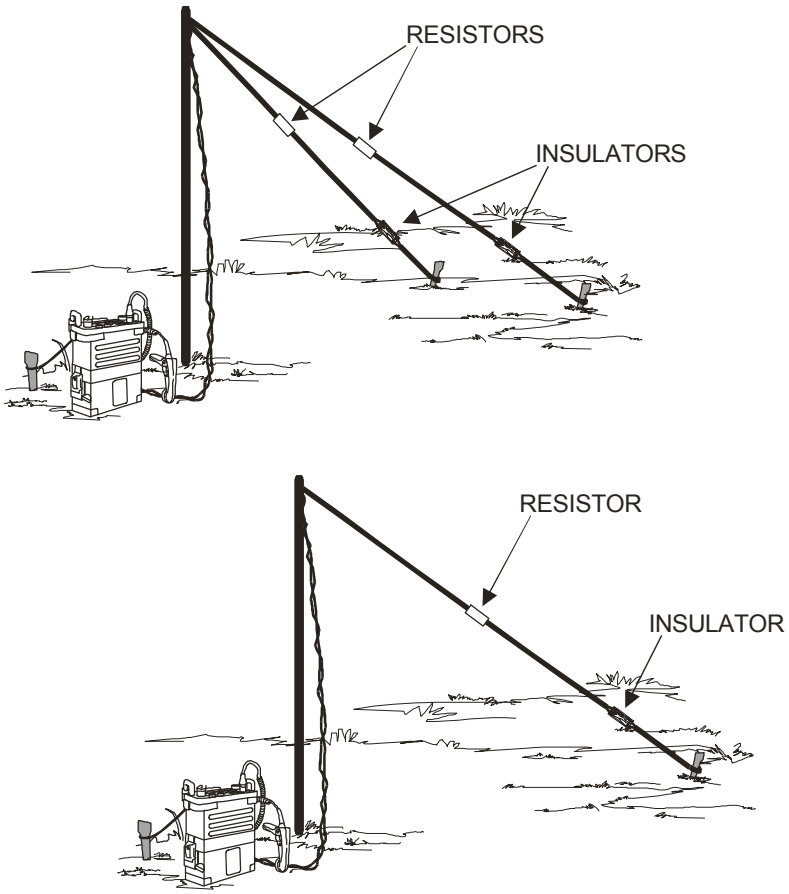

Figure 6-14. Sloping Vee Antenna.

Downloaded from http://www.everyspec.com

Use table 6-1 to determine the angle and length of the legs..

Table 6-1. Leg Length and Angle for Vee Antennas.

Antenna Length (Wavelength)	Optimum Apex Angle (Degrees)
1	90
2	70
3	58
4	50
6	40
8	35
10	33

When the antenna is used with more than one frequency or one wavelength, use an apex angle that is midway between the extreme angles determined by the chart.

To make the antenna radiate in only one direction, add noninductive terminating resistors from the end of each leg (not at the apex) to ground. The resistors should be approximately 500 ohms and have a power rating at least one-half of the transmitter's output. Without the resistors, the antenna radiates bidirectionally, both front and back.

Downloaded from http://www.everyspec.com

Chapter 7

Satellite Communications Antennas

The Marine Corps' primary LOS and SATCOM radio set, the AN/PSC-5 enhanced manpack UHF terminal, operates at 5 to 25 kHz and provides data and voice communications. It replaces all manpackable and vehicular-mounted UHF SATCOM radios. The AN/PSC-5 provides LOS communications with the AS-3566 and long-range SATCOM with the AS-3567 and AS-3568 antennas.

Characteristics of the AS-3566 (fig. 7-1) are—

Frequency range (LOS):	30 to 400 MHz
Demand assignment multiple access (DAMA):	225 to 400 MHz
Non-DAMA:	225 to 400 MHz
Polarization:	Directional
Power capability:	Determined by terminating resistor
Radiation pattern Azimuthal (bearing):	Directional

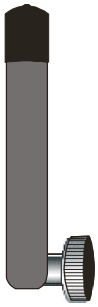

Figure 7-1. AS-3566 Low-Gain Antenna.

Downloaded from http://www.everyspec.com

Characteristics of the AS-3567 (fig. 7-2) are—

Frequency range:	225 to 399.995 MHz
Beamwidth:	85°
Orientation:	Directional
	Elevation (0 to 90°)
Input impedance:	50 ohms
VSWR:	1.5:1
Gain:	6 dB (225 to 318 MHz)
	5 dB (318 to 399.995 MHz)

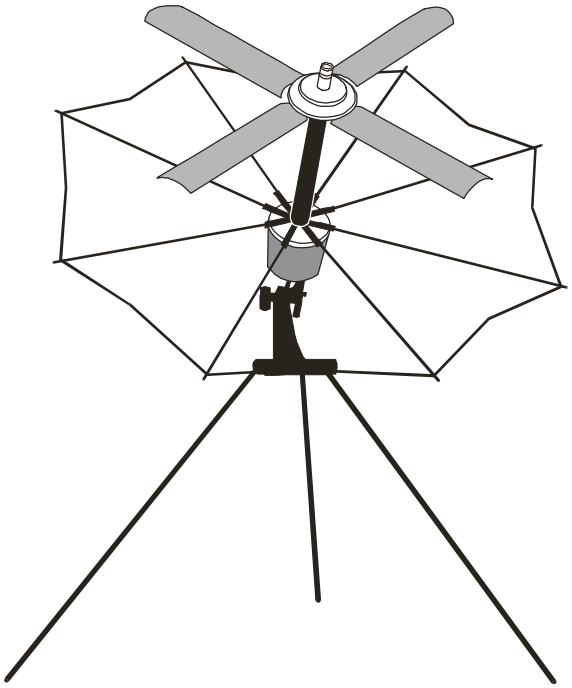

Figure 7-2. AS-3567 Medium-Gain Antenna.

Downloaded from http://www.everyspec.com

Characteristics of the AS-3568 (fig. 7-3) are—

Frequency range:	240 to 400 MHz
Beamwidth:	77°
Orientation:	Directional
	Elevation (0 to 90°)
	Azimuth: ± 180°
Imput impedance:	50 ohms
VSWR:	1.5:1 maximum
Gain:	8 dB (240 to 318 MHz)
	6 dB (318 to 400 MHz)
Power	Up to 150 watts continuous

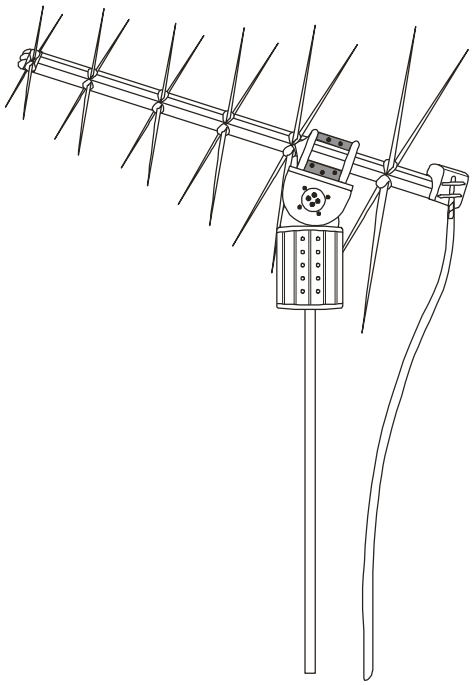

Figure 7-3. AS-3568 High-Gain Antenna.

Downloaded from http://www.everyspec.com

SITING SATCOM ANTENNAS

The most important consideration in siting LOS SATCOM equipment is the antenna elevation with respect to the path terrain. Choose sites that exploit natural elevations.

Considerations

The most important consideration in siting over-the-horizon systems is the antenna horizon angles (screening angles) at the terminals. As the horizon angle increases, the transmission loss increases, resulting in a weaker received signal.

The effect of the horizon angle on transmission loss is very significant. Except where the consideration of one or more other factors outweighs the effect of horizon angles, the site with the most negative angle should be first choice. If no sites with negative angles exist, the site with the smallest positive angle should be the first choice.

Determining Horizon Angles

The horizon angle can be determined by using a transit at each site and sighting along the circuit path. Strictly speaking, the on-site survey will determine the visual horizon angle. The radio horizon angle is slightly different from the visual horizon angle; however, the difference is generally insignificant.

The horizon angle is measured between the tangent at the exact location of the antenna and a direct LOS to the horizon. The tangent line is at a right angle (90°) to a plumb line at the antenna site. If the LOS to the horizon is below the tangent line, the horizon angle is negative.

Downloaded from http://www.everyspec.com

Trees, buildings, hills, or the Earth can block a portion of the UHF signal, causing an obstruction loss. To avoid signal loss due to obstruction and shielding, clearance is required between the direct LOS and the terrain. Path profile plots are used to determine if there is adequate clearance in LOS systems.

Weak or distorted signals may result if the SATCOM set is operated near steel bridges, water towers, power lines, or power units. The presence of congested air-traffic conditions in the proximity of microwave equipment can result in significant signal fading, particularly when a nondiversity mode is employed.

(reverse blank)

Downloaded from http://www.everyspec.com

Chapter 8

Antenna Farms

The antenna farm (also referred to as the radio hill or the antenna hill) is a component of a command echelon. It is the location of the bulk of the unit's antennas and radio and cryptographic equipment. It is also the portion of the command echelon that produces the majority of the electromagnetic radiation. Antenna farms can be located in several different areas: inside the command echelon, outside the command echelon but near it, or outside the command echelon but far from it.

COMMAND POST

The commander exercises command and control through establishing a command post (CP). CPs provide the headquarters facilities from which the commander and staff operate. Battalions and larger units may divide the headquarters into three echelons—tactical, main, and rear. The CP then becomes the echelon at which the commander is physically located.

Tactical

The tactical echelon (main group) is a mobile unit that contains a minimal personnel and equipment. Its main focus is tactical control of current operations. The antenna farm will generally be located within the CP.

Downloaded from http://www.everyspec.com

Main

The main echelon is where the commander is normally located together with those elements of the staff required to plan and direct operations and control forces. The antenna farm will generally be located outside of and far from the CP.

Rear

The rear echelon, located to the rear of the main echelon, focuses on administrative and logistics functions. It is normally established by regiments and larger units. It may be located in or near the rear echelon of the senior headquarters or remain aboard ship. The antenna farm will generally be located outside of and far from the CP.

LOCATION SELECTION CONSIDERATIONS

There are doctrinal, tactical, and technical considerations involved in deciding of how far the antenna farm should be from the CP. The CIS officer and CIS chief need to list considerations relevant to the situation before determining the best location for the antenna farm.

Doctrinal Considerations

MCWP 6-2 (under development), *MAGTF Command and Control,* FMFM 6 (MCWP 3-1 under development), *Ground Combat Operations*, and MCWP 6-22, *Communications and Information Systems*, contain Marine Corps doctrinal guidance on command echelon organization and location.

Some areas to consider when deciding on the antenna farm location are communications, electronic warfare (EW), tactical situation, and accessibility.

Downloaded from http://www.everyspec.com

Communications

- Take a radio along on reconnaissance to ensure that communication from the proposed site is possible.
- Choose another site if communication is not possible.

Electronic Warfare

- Enemy capability.
- Projected electronic signature of the command.

Tactical Situation

- Cover and concealment.
- Offense/defense.
- Moving/static.
- Intended length of stay.
- Future operational plans.
- Speed of displacement.

Accessibility

- Terrain.
- Climate.
- Personnel and equipment available.

Tactical Considerations

Once the doctrinal issues have been addressed, locating the antenna farm must be reviewed in the light of tactical considerations. Since the antenna farm contains the majority of the unit's radios, cryptographic equipment, antennas, and a fair portion of the radio operators, the physical safety of the site is an important aspect of the

Downloaded from http://www.everyspec.com

antenna farm location decision. At the division/force service support group/wing levels, the antenna farm should be remoted 1,000 meters away from the CP, if possible.

Security. The antenna's physical security depends on the ability to protect it. The requirement to provide protection depends on the considerations listed above. Protection considerations also depend, in part, on the proximity of the antenna farm to the CP. For an antenna within the CP, no additional protective measures are required beyond those employed to protect the CP. Additional considerations for the antenna farms located at remote sites follow.

Far Remote Sites

- Security forces available.
- Natural obstacles.
- Perimeter defense, avenues of approach.
- Barbed wire, automatic weapons, deployment.
- Mines and sensors.
- Supporting coverage.

Near Remote Sites

- Same factors as above apply.
- Take increased EW measures.
- Enforce strict circuit discipline.
- Use messengers.

Cover and Concealment. Whether the antenna farm is located inside the unit perimeter or at a remote location, using cover and concealment is imperative. Security assets make it possible to select a site that has the best available cover and concealment. Cover and concealment is a trade-off with the ability to communicate with and

Downloaded from http://www.everyspec.com

from the site. A thoroughly covered and concealed site that prevents communications is worthless.

Obstacles. As with any other defensive position, use natural or manmade obstacles to enhance the antenna farm's security.

Terrain. Studying the terrain in the vicinity of remote antenna farms is essential to developing an adequate plan for defense. Studying the terrain is also of paramount importance to ensuring that a unit can communicate from the site.

Technical Considerations

Siting VHF antennas greatly effects communications reliability. In an ideal setting, the antenna would be as high as possible above a flat, clear area. In tactical situations, the antenna location must be a compromise of propagation consideration, EW considerations, and cover and concealment.

When it is possible to see the distant station but not communicate with it, the receiving station is experiencing destructive multipath interference. This combining of direct and reflected rays out of phase, results in complete signal cancellation. This interference can also result in a very weak signal or one that flutters. To improve communications, either raise or lower the antenna or move the antenna to several different sites. Usually, one or both of these actions will result in good communications.

Another cause of weak communications is antenna cross-polarization. This means that the transmitting and receiving antennas have a different polarization. For best communications, both antennas should be vertically or horizontally polarized.

Downloaded from http://www.everyspec.com

Another problem could be misaligned directional antennas. If directional antennas are not correctly pointed at each other, communication is degraded. The directional antennas' electrical characteristics can change over several field deployments, especially if the antenna is subjected to harsh use. These electrical characteristic changes can cause the radiation pattern to change. Then, when the antenna is physically pointed at the distant station, the main radiation may be aimed in another direction.

To correct these electrical characteristic changes, have the distant station transmit. Slowly turn the receiving antenna while listening to the received signal. When the received signal is strongest, the antenna is properly aligned for the circuit. Secure the antenna in this position and have the distant station align its antenna in the same way. When both antennas are properly adjusted, the maximum radiation from each antenna is directed at the other antenna.

SITING VHF ANTENNAS

Antenna sites should be as high as possible and clear of obstructions such as hills, dense woods, and buildings. If it is necessary to site the antennas on or around hills, choose a site that allows LOS to the distant station or stations. If possible, place the antenna on the military crest of a hill, *not* on the ridge line. Antennas located on the ridge line provide an aiming stake for enemy observation and fire (fig. 8-1).

Place high ground between the antenna and the enemy to block the enemy's observation and the antenna's radiation, reducing the enemy's intercept capability (fig. 8-2).

Downloaded from http://www.everyspec.com

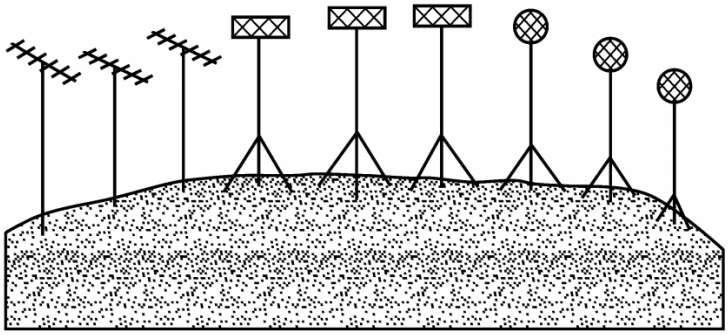

Figure 8-1. Ridge Line Antenna Farm.

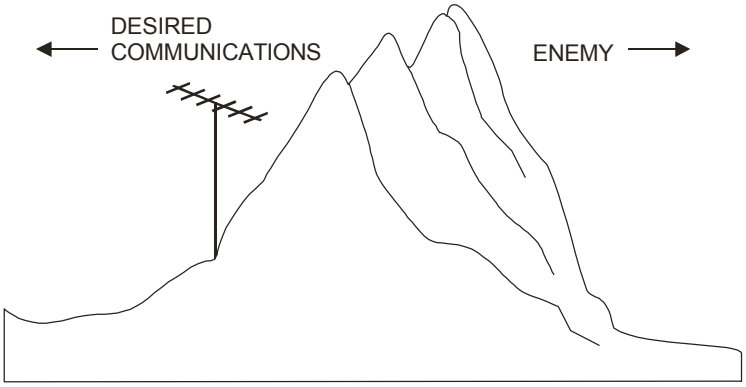

Figure 8-2. Antenna Sited on a Military Crest.

In a dense forest, get the antenna tip above the treetops. This height allows the radio signal to propagate in the clear space above the trees. If it is impossible to raise the antenna above the trees, a horizontally polarized antenna provides better communications through

Downloaded from http://www.everyspec.com

trees than a vertically polarized antenna. Figure 8-3 shows good, fair, and poor antenna siting in dense trees.

A clearing in a forest improves propagation if the antenna is placed so that the clearing is between the antenna and the distant station (for a directional antenna). Place an omnidirectional antenna in the center of a clearing, with the antenna as high as possible (fig. 8-4).

A communicator may have little choice in selecting a transmitter or receiver site location. Often the site is determined by the operational requirements of a superior command. However, when a choice is available, determine the HF antenna site by wave-path geometry.

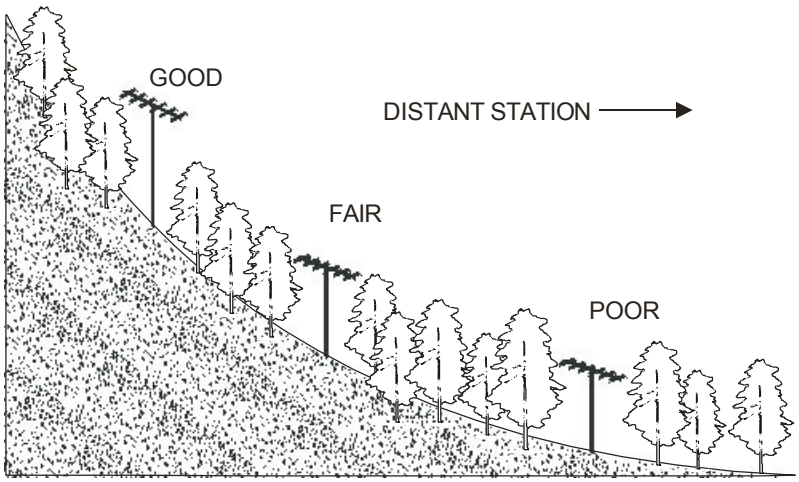

Figure 8-3. Antennas Sited in Dense Trees.

Downloaded from http://www.everyspec.com

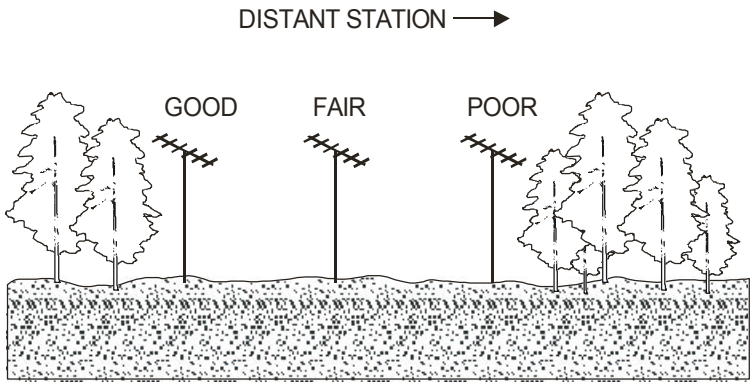

Figure 8-4. Directional Antennas Sited in a Clearing.

Transmitting Antenna Site

Any site that has a horizon whose obstructions subtend vertical angles of less than 2° from level in any of the directions of transmission can be considered immediately as a satisfactory site from the standpoint of radiation. As a simple rule, a satisfactory horizon clearance exists when any obstruction subtends a vertical angle that does not exceed one-half of the desired beam angle in the vertical plane in that direction. If the vertical beam angle for a given circuit is low for the lowest order hop, then the horizon in that direction can be as much as 5° above level as seen from the antenna location.

In hilly or mountainous country, choosing a site for long-distance transmission, requiring very low beam angles, can be difficult. When the only possible site presents horizon obstructions in the preferred wave path, it may be necessary to design an antenna that uses a higher order of hop, and to direct the beam at a corresponding higher angle to obtain the desired 2-to-1 horizon clearance angle.

Downloaded from http://www.everyspec.com

For example, if the computed vertical beam angle for a one-hop circuit is 6° at an azimuth of 332°, and the horizon in this direction is a range of mountains with a height of 8° as seen from the antenna site, the performance of the circuit would be greatly compromised by the obstruction of the mountains. It might be better to work this circuit with two hops—a vertical beam of 20° could be used instead, with adequate horizon clearance for the wave path. If the circuit required 6° for a two-hop circuit 5,400 kilometers long with the same obstruction sited, the circuit could be changed to three hops, which, for the same layer heights, would permit using a beam at 14°. The latter solution lacks the full 2-to-1 horizon-clearance angle, but it may be an acceptable compromise and perhaps preferable to using four hops.

Short-range, sky wave circuits using one-hop high-angle radiation give a great latitude in the choice of sites. For F layer transmission to distances of 500 miles and less, the vertical beam or angles are always greater than 30°. Satisfactory sites for such transmission can often be located in rather deep valleys without any compromise on the circuit performance.

Forests on or near the site require some consideration. Because the theoretical radiation pattern is calculated on perfect reflectivity from ground, some precautions are necessary to obtain actual performance that substantially agrees with theoretical performance. Choose a site that provides conditions as nearly perfect as possible with respect to wave-reflecting surfaces around the antenna. There should be few or no trees and buildings out to the necessary distance from the antenna. The point of wave reflection should be flat and cleared. An excellent choice is a site that borders the sea or a lake. Water is a wave-reflecting surface.

Downloaded from http://www.everyspec.com

Receiving Antenna Sites

Choosing a receiving antenna site is similar to choosing a transmitting antenna site. The dominant angles of arrival of the incoming waves at the site are determined mainly by the characteristics of the transmitting antenna. Best results are obtained with complementary transmitting and receiving antennas. If a horizon obstruction exists at the optimum angle of wave arrival, a compromise, noncomplementary antenna may be necessary. When possible, move the transmitting antenna to align with the receiving antenna.

The receiving site must be as free as possible from electrical noise. The tolerable amount of manmade noise at a particular receiving station site depends on the prevailing natural atmospheric noise levels. At a well selected site, reception should always be limited only by natural atmospheric noise. Any manmade noise at the site should always be substantially less than the atmospheric noise received during the low-noise periods.

Aside from broadcast systems, most communications systems require that antennas be positioned so that their main lobes of radiation are aligned with each other. This requires knowledge of the great circle bearing to the other antenna and the local magnetic variation from true north.

The great circle bearing between two locations is calculated by methods that are beyond the scope of this publication. A way to find the great circle bearings is to request a frequencies of optimum transmission chart from the Electromagnetic Compatibility Analysis Center.

Downloaded from http://www.everyspec.com

ANTENNA FARM INTERNAL ARRANGEMENT

Frequency Band

The higher the frequency, the shorter the wavelength. The shorter the wavelength, the more nearly LOS. The more nearly LOS, the more critical is a clear LOS path for the signal.

Antenna Selection and Placement

Selection. The key to antenna selection rests with the answers to the following three questions:

- To whom will you be transmitting? Where will they be?
- What is the path between you and them?
- What kind of net? Point-to-point or multistation?

Placement. Antenna placement within the antenna farm should take into account the following three factors:

Cosite Interference. Evaluating interference can be difficult because of the nature of the systems involved and the complexity of the signals. The mechanisms are varied. In the simpler cases they may be direct interference into the radio receiver. In other cases, they may be spurious products or combinations of products which arrive at the receiver input and produce a net resultant interference into the receiver intermediate frequency section. The latter may be frequency translations resulting from sum and difference products within the same system. In still other cases, the receiver may see an identical signal to the regular signal.

Interference produces beats or noise in a radio receiver which have detrimental effects depending on the frequency, deviation, channel separation and linearity of the transmission medium, as well as the

Downloaded from http://www.everyspec.com

nature of the interfering signal. Sometimes the interfering signals combine with other frequencies in the system, including carrier-sum and difference frequencies, to produce interference in a third radio channel. The products may hold up automatic gain control during critical fading periods, with serious effect on system noise. Usually, noise in the base band channels is an end product.

Radio system interference may be introduced through antennas, wave guides, cabling, or by spurious products produced in the radio equipment itself. Interference introduced into the cabling or in the equipment can be prevented by good installation practices, including proper separation of high- and low-level cabling, proper grounding practices, shielding where necessary, and good equipment design and assembly. Interference introduced by coupling between wave guides in the same station is usually produced by radiation from wave guide and filter flanges which are not properly tightened, or which are damaged and cannot be mated properly.

Antenna Coupling. Antenna coupling is a frequency-independent problem that may occur whenever other antennas (whether transmitting or not) or metallic objects are located within one wave of the transmitting antenna. Antenna coupling may be either beneficial or detrimental. Yagis, log periodic arrays, and half-square antennas, for example, derive their gain and directivity from antenna coupling. Unintended antenna coupling, on the other hand, may significantly reduce the signal strength in the desired direction and either degrade or stop communications.

Coupling is based on two principles. One, that current flowing through a wire creates a magnetic field around it; and, two, that signals in phase reinforce each other whereas signals out of phase cancel each other. Receiving antennas have current flowing in them (the received signal). Because there is a flowing current that creates a magnetic field, a receiving antenna will simultaneously receive and reradiate the same signal. Receiving antennas, in fact, tend to

Downloaded from http://www.everyspec.com

reradiate about one-half of the power they receive. If the receiving antenna is within one wavelength of a transmitting antenna (it makes absolutely no difference whether or not the receiving antenna's radio is tuned to the same frequency as the transmitting radio), the receiving antenna will reradiate a portion of the signal which may be out of phase with the original signal, altering the transmitting antenna's radiation pattern.

Direction of Desired Transmission. Separate antennas according to the direction of desired transmission. For example: If antenna A is used to communicate to the east, and antenna B is used to communicate to the north, then locate antenna A south and east of antenna B. *Do not* make the signal from one antenna pass through, or around, another antenna on the way to its intended receiver. Accomplish this by the physical location of the antennas, by masking the antennas, or by placing the antennas at different elevations.

Requirements

Separate antennas based on the frequencies at which they will operate and the power they will transmit to avoid cosite interference.

For a 10 percent separation—

Power	Distance (Meters)
1 kilowatt	500
400 watts	315
150 watts	200
100 watts	150
40 watts	100
20 watts	70
10 watts	50
2 watts	22
1 watt	15

Downloaded from http://www.everyspec.com

Multiply separations by 10 for each halving of frequency separation (i.e., 10 for 5 percent; 100 for 2.5 percent).

For a 5 percent separation—

Power (Watts)	Distance (Meters)
10	500
2	220
1	150

For a 2.5 percent separation—

Power (Watts)	Distance (Meters)
10	5000
2	2200
1	1500

Separate antennas by a minimum of wavelength at the lowest frequency at which they will operate to alleviate antenna coupling.

Band	Lowest Frequency (MHz)	Minimum Separation (Feet)
HF	2	492
VHF	30	32.8
UHF	225	4.37

Separate antennas according to the desired direction of transmission (i.e., don't send the propagated wave through other antennas).

Polarization

The preferable polarization with respect to vegetation depends on the forest and the amount of foliage. Use a polarization with an inherent advantage when heavy vegetation cannot be avoided. Any

Downloaded from http://www.everyspec.com

advantage based on polarization will be determined by the polarization of possible sources of interference. In deciduous forests the sources are evenly divided between vertical and horizontal. In mature coniferous forests the sources are predominately vertical, so horizontal polarization has an advantage.

Power and Signal Lines

Distribute power and signal lines to eliminate and avoid crossovers. If power and signal lines must cross, arrange them so that they cross at right angles, and separate them by 4 feet of elevation. Do not run power and signal lines parallel to each other.

ANTENNA FARM LAYOUT PRINCIPLES

- Segregate HF, VHF, and UHF channels.
- Maintain separation between antennas.
- Separate power and signal lines. Keep them out of the main ground phase of antennas.
- Keep transmitters close to the feed point of their antennas (i.e., keep them short).
- Establish good RF and safety grounds for each antenna.
- Use ground radials for each antenna.
- Site LOS antennas on the highest ground.
- Site antennas to avoid the main lobes and significant side lobes of directional antennas.
- Remote antenna farms 1 kilometer from the CP if practical.

Downloaded from http://www.everyspec.com

Appendix A

GLOSSARY

Section I
Acronyms and Abbreviations

AM ..... amplitude modulationn

C ..... centigrade
CIS ..... communications and information systems
cm ..... centimeter
COMSEC ..... communications security
CP ..... command post

dB ..... decibel
dBi ..... decibels over an isotropic radiator

e.g. ..... for example
EW ..... electronic warfare

FM ..... frequency modulation
FMFM ..... Fleet Marine Force manual
FMFRP ..... Fleet Marine Force reference publication

GHz ..... gigahertz

HF ..... high frequency

i.e. ..... that is

Downloaded from http://www.everyspec.com

kHz ..... kilohertz
km ..... kilometer
kW ..... kilowatt

LOS ..... line of sight
LUF ..... lowest usable frequency

MAGTF ..... Marine air-ground task force
MCDP ..... Marine Corps doctrinal publication
MCRP ..... Marine Corps reference publication
MCWP ..... Marine Corps warfighting publication
MHz ..... megahertz
mi ..... mile/miles
MUF ..... maximum usable frequency

NVIS ..... near-vertical incidence sky wave

RF ..... radio frequency

SATCOM ..... satellite communications
SCR ..... single-channel radio
SID ..... sudden ionospheric disturbance
SINCGARS ..... single-channel ground and airborne radio system
S/N ..... signal-to-noise
SPEED ..... system planning, engineering, and evaluation device
SWR ..... standing wave ratio

TV ..... television

UHF ..... ultrahigh frequency

Downloaded from http://www.everyspec.com

VHF ..... very high frequency
VHF-LOS ..... very high frequency line of sight
VSWR ..... voltage standing-wave ratio

W ..... watt

Downloaded from http://www.everyspec.com

Section II
Definitions

A

alternating current—Current that is continually changing in magnitude and periodically in direction from a zero reference level. Also called **AC**.

amplification—The process of increasing the strength (current, voltage, or power) of a signal.

amplitude—The level of an audio or other signal in voltage or current. The magnitude of variation in a changing quantity from its zero value.

amplitude modulation—Modulation in which the amplitude of the carrier wave is varied above and below its normal value in accordance with the intelligence of the signal being transmitted. Also called **AM**.

angle of incidence—The acute angle (smaller angle) at which a wave of energy strikes an object or penetrates a layer of the atmosphere or ionosphere.

antenna—A device used to radiate or receive electromagnetic energy (generally RF).

antenna bandwidth—The frequency range over which a given antenna will accept signals.

antenna feed—Means by which power is transferred to and from the antenna and the connecting transmission line.

Downloaded from http://www.everyspec.com

antenna gain—The effectiveness of a directional antenna as compared to a standard nondirection antenna. It is usually expressed as the ratio in decibels of standard antenna input power to directional antenna input power that will produce the same field strength in the desired direction. For a receiving antenna, the ratio of signal power values produced at the receiver input terminals is used. The more directional an antenna is, the higher is its gain.

array—Several simple antennas, usually dipoles, used together to control the direction in which most of the antenna's power is radiated.

attenuation—Power loss resulting from conductor resistance and dielectric loss within the insulating material used to separate the conductors.

azimuth—An angle measured in a horizontal plane from a known reference point.

B

balanced antenna—An antenna is balanced with respect to ground when both its arms have the same electrical relationship to ground.

balanced transmission line—A transmission line whose conductors have voltages of opposite polarity and equal magnitude with respect to the Earth.

balun—A device for feeding a balanced load with an unbalanced line, or vice versa.

bandwidth—The width of a band of frequencies used for a particular purpose.

Downloaded from http://www.everyspec.com

baud—The number of times per second the carrier signal changes value.

bidirectional—In two directions, usually opposite.

blob—Small areas of the atmosphere where temperatures and pressure differences produce conditions suitable for the refraction of radio waves.

broadband antenna—An antenna capable of operation over a wide band of frequencies

C

cable connectors—Fittings for cable ends which permit rapid connection and disconnection with equipment or other cables.

capacitance—A natural property of an electrical circuit which opposes the rate of change of voltage.

capacitor—A device for storing electrical charge.

center-fed—Transmission line connection at the electrical center of an antenna radiator.

coaxial cable—A transmission line consisting of two conductors, one inside the other, and separated by insulating material. The inner conductor may be a small copper tube or wire; the outer conductor may be metallic tubing or braid. Radiation loss from this type of line is very little.

command post—The headquarters of a unit or subunit where the commander and staff perform their functions.

Downloaded from http://www.everyspec.com

communications circuit—The means by which information is transferred between two or more places.

conductor—A material (usually metal) that has low resistance to the flow of electrical current. A wire, cable, or other object capable of carrying electric current. Good conductors are made of metals such as silver, copper, and aluminum.

connections—Points at which two or more conductors are brought into contact.

counterpoise—A conductor or system of conductors used as a substitute for ground in an antenna system; a wire or group of wires mounted close to the ground, but insulated from ground, to form a low-impedance, high-capacitance path to ground.

critical frequency—The highest frequency at which a signal may be transmitted directly overhead and be reflected back to Earth from the ionosphere.

cross-polarized—The polarization of a received signal is 90 degrees to the polarization of the receiving antenna.

current—The flow of electrons along any path.

D

decibel—The standard unit used to express transmission gain or loss and relative power levels. Also called **dB**.

deflection—The displacement of an electron beam from its line of sight path.

demodulate—To recover the information originally impressed on the radio wave.

Downloaded from http://www.everyspec.com

dielectric—A material that does not conduct electricity, such as rubber or glass, i.e. an insulator.

diffraction—The process by which electromagnetic waves are bent so that they appear behind an obstruction.

dipole antenna—A center-fed wire antenna whose conductors are in a straight line.

directional antenna—An antenna designed to transmit and receive RF energy in a specific direction(s).

direct waves—Waves which propagate in a straight line from the transmitting to the receiving antennas.

directivity—The property of radiating more energy in some directions than in others.

director—A conductor placed in front of a driven element to cause directivity.

ducting—The propagation of VHF/UHF wave by bouncing between the Earth's surface and the interface between layers of air having different dielectric constants.

E

efficiency—The ratio of power output to power input.

electromagnetic field—The field of force that an electrical current produces around the conductor through which it flows.

electromagnetic waves—A wave propagating as a periodic disturbance of the electric and magnetic fields and having a frequency in

Downloaded from http://www.everyspec.com

the electromagnetic spectrum; the means by which energy is transmitted from one place to another.

end-fed—An antenna whose power is applied to one end rather than at some point between the ends.

F

fading— A periodic decrease in received signal strength.

feedpoint impedance—Impedance that is measured at the input terminals of an electrical device such as an antenna.

fields—Regions in which each point has a value of a physical quantity (voltage, magnetic force, velocity, mass, etc.).

free space—The absence of ground.

frequency—The rate at which a process repeats itself. In radio communications, frequency is expressed in cycles per second.

frequency hopping—A method of jumping from frequency to frequency in synchronization with one another in a random order at a rate of up to 100 times per second. Frequency hopping is the preferred method of communication with SINCGARS radios.

frequency modulation—The process of varying the frequency of a carrier wave, usually with an audio frequency, in order to convey intelligence. Also called **FM**.

frequency of optimum transmission—85 percent of the maximum usable frequency (MUF). A practical frequency selection which allows for MUF variations.

Downloaded from http://www.everyspec.com

G

gain—The increase in signal strength that is produced by an amplifirer.

generator—A device that changes mechanical energy into electrical energy.

ground—A very large semiconductive surface (the Earth) or a smaller highly conductive surface.

ground radials—Wires on or in the earth to improve its conductivity near the antenna.

ground screen—A wire mesh ground plane.

ground wave—A radio wave that travels along the Earth's surface rather than through the upper atmosphere.

H

half-wave dipole antenna—A center-fed antenna whose electrical length is half the wavelength of the transmitter or received signal.

half-wave vertical dipole antenna—A half-wave dipole constructed vertical to the Earth's surface.

hertz—One cycle per second.

high frequency—frequencies between 3 and 30 MHz.

hop—A single reflection of the wave back to Earth at a point beyond the horizon.

Downloaded from http://www.everyspec.com

horizontal dipole—A dipole constructed parallel to the Earth's surface.

horizontal pattern—The horizontal cross-section of an antenna's three-dimensional radiation pattern.

horizontal polarization—Transmission of radio waves in such a way that the electric lines of force are horizontal (parallel to the Earth's surface).

I

impedance—The total opposition offered by a circuit or component to the flow of alternating current.

impedance match—The condition where the load impedance equals the characteristic impedance of a transmission line.

inductance—The natural property of an electrical circuit which opposes the rate of change or current, i.e., electrical "intertia."

in phase—Two or more signals of the same frequency passing through their maximum and minimum values of like polarity at the same instant.

insulator—A device or material that has a high electrical resistance; a nonconductor of electricity.

interference—A degradation of a received signal caused by another transmitter, a noise source, or the desired signal propagation over two or more different routes.

inverted L antenna—A half-wave dipole fed by a one-quarter wavelength long vertical section.

Downloaded from http://www.everyspec.com

inverted vee antenna—A half-wave dipole erected in the form of an upside-down vee, with the feed point at the apex. It is essentially omnidirectional, and is sometimes called a "dropping doublet."

ionization—The process where radiation and particles from the Sun make some of the Earth's atmosphere partially conductive.

ionosphere—A partially conducting region of the Earth's atmosphere between 50 kms and 400 kms high.

L

lambda—Greek lower case letter (λ) used to represent a wavelength with reference to electrical dimensions in antenna work.

linearly polarized antennas—Antennas that produce only one polarization.

line of sight—The transmission path of a wave that travels directly from the transmitting antenna to the receiving antenna. Also called **LOS**.

load—A device that consumes electrical power.

loading—Providing or connecting an electrical device capable of accepting power to match the impedance of an antenna to a transmitter so that maximum power is radiated from a generating device, such as a transmitter.

lobe—A bulge on an antenna radiation pattern which indicates the direction in which radiated power is concentrated.

long-wire antenna—An end-fed single wire antenna usually one wavelength or longer.

Downloaded from http://www.everyspec.com

lowest usable frequency—The lowest frequency that will not be absorbed by the ionosphere or smothered by atmospheric noise. Also called **LUF.**

M

maximum usable frequency—The highest frequency for a given elevation angle that will reflect from an ionospheric layer. Also called **MUF**.

megahertz—One million cycles per second. Also called **MHz**.

modulate—To change the output of a transmitter in amplitude phase, or frequency in accordance with the information to be transmitted.

monopole antenna—An antenna with a single radiating element; a whip antenna.

N

noise—Random pulses of electromagnetic energy generated by lightning or electrical equipment.

O

offset angle—The angle at which a long wire antenna must be aimed on either side of the direction to the base station.

omnidirectional antenna—An antenna whose radiation pattern shows equal radiation in all horizontal directions.

oscillation—A periodic, repetitive motion or set of values (voltage, current, velocity).

Downloaded from http://www.everyspec.com

out of phase—Two alternating quantities not passing through corresponding values at the same time (e.g., if the current in a circuit reaches its maximum value before or after the applied voltage does, the current is out of phase with the voltage).

P

path loss—The ratio of received power to transmitted power.

polarization—The direction of the electric field of a radiated wave relative to the surface of the Earth (vertical, horizontal, linear, and circular).

polarization fading—Fading due to polarization rotation of a received signal. The received signal decreases when the incoming wave does not have the same polarization as the receiving antenna.

power gain—The directive gain of an antenna multiplied by its efficiency

propagation—A phenomenon by which any wave moves from one point to another; the travel of electromagnetic waves through space of along a transmission line.

propagation path—The path or route over which power flows from the transmitter to the receiver.

Q

quarter-wave antenna—An antenna with an electrical length that is equal to one-quarter wavelength of the signal being transmitter or received.

Downloaded from http://www.everyspec.com

R

radiate—To transmit RF energy.

radiation—Energy that moves through space as electromagnetic waves.

radiation patterns—A chart of relative radiation intensity (or power) versus direction.

radio frequency—Any frequency of electrical energy capable of propagation into space (usually above 20 kHz). Also called **RF**.

radio horizon—The greatest distance on the Earth at which a transmitted wave can be received by the direct path from a transmitter located on the Earth.

radio waves—Electromagnetic waves at a frequency lower than 3,000 GHz and propagated through space without and artificial guide.

receiver—Amplifying and selecting equipment that receives radio frequencies and delivers a duplicate of the information impressed on the transmitter.

reception—The process of recovering transmitted information; the process of converting electromagnetic fields to current in wires.

reciprocity—The various properties of an anntenna apply equally whether the antenna is transmitting or receiving.

reflected waves—Waves that change their direction of propagation after striking a surface that is either a conductor or an insulator.

Downloaded from http://www.everyspec.com

reflection—The turning back of a radio wave from an object or the surface of the Earth.

reflector type antenna—An antenna placed in front of a conducting surface (reflector) for the purpose of increasing radiation in one direction, at the expense of radiation in other directions.

refraction—The bending, or changing direction, of a radio wave passing into or through layers of the atmosphere or the ionosphere that have different density (dielectric constant).

refractive index—A measure of the degree by which the speed of an electromagnetic wave is slowed as it propagates through a given material.

resistance—The property of a material or substance to oppose the passage of current through it, thus causing electrical energy to be converted into heat energy.

resonance—The state or frequency of vibration, electrical or mechanical, in which forces that impede the motion are minimum.

resonant length—The proper length of an antenna to render it resonant

rhombic antenna—An antenna made of four wires of equal length connected together in the shape of a rhombus.

S

scattering—The spreading or breaking up of electromagnetic waves when they encounter objects of different electrical properties than those in which the wave is traveling.

Downloaded from http://www.everyspec.com

shortened dipole—A dipole antenna made to resonate at a lower frequency by use of a coil.

signal—A radio wave that contains the transmitted message.

signal loss—The amount of signal power lost between the transmitter and receiver.

signal-to-noise ratio—The power intensity of the signal compared to that of the noise.

skip distance—The distances on the Earth's surface between the points where a radio wave sky wave leaves the antenna and is successfully reflected and/or refracted back to Earth from the ionosphere.

skip zone—The space or region within the transmission range where signals from a transmitter are not received, i.e., between the ground wave and the point where the refracted wave returns.

sky wave—A radio wave that is reflected from the ionosphere.

sloping long-wire antenna—A wire antenna of length greater than one wave-length and supported in an inclined orientation with respect to the ground.

standing-wave ratio—The ratio of the maximum to minimum amplitudes of voltage, or current, along a transmission line.

standing waves—Waves that appear not to be moving as the result of power traveling in both directions along a transmission line.

stratosphere—The second layer of the Earth's atmosphere, extending from 10 to 50 km.

Downloaded from http://www.everyspec.com

sunspots—Activity on the Sun's surface which is seen as a series of blemishes that vary in size, number, and location.

T

take-off angle—The angle measured from the Earth's surface or horizontal up to the direction of propagation towards the ionosphere.

transistor—A minute electronic device that permits a small current to control the flow of a larger current.

transmission line—A conductor that transfers radio frequency RF energy from the transmitter to the antenna or from the antenna to the receiver.

transmitter—A piece of equipment that generates and amplifies a radio frequency, adds intelligence to this signal, and then sends it out into the air as a radio frequency wave.

troposphere—The region of the Earth's atmosphere from the surface to a height of about 10 km.

tuning—The process of adjusting a radio circuit so that it resonates at the desired frequency.

twin-lead transmission line—A balanced transmission line generally used with balanced antennas.

two element array—An antenna composed of two element antennas.

Downloaded from http://www.everyspec.com

U

ultrahigh frequency—Frequencies between 300 and 3,000 MHz.

unbalanced transmission line—A transmission line one of whose conductors is grounded.

unidirectional—In one direction only.

V

vee antenna—Two long-wire antennas connected to form a vee.

velocity—The speed of a radio wave through the dielectric medium it is in.

vertical dipole—A balanced or dipole antenna oriented vertically.

vertical polarization—Transmission of radio waves in such a way that the electric lines of force are vertical (perpendicular to the Earth's surface).

vertical quarter-wave antenna—A monopole (whip) antenna that is oriented vertically.

very high frequency— Frequencies between 30 and 300 MHz; transmissions that follow the line of sight path.

voltage—Electrical pressure, expressed in volts, which is the result of squeezing electrons together.

voltage standing-wave ratio—The ratio of the amplitude of the electric field or voltage at a voltage maximum to that at an adjacent voltage minimum. Also called **VSWR**.

Downloaded from http://www.everyspec.com

W

wavelength—The distance a wave travels during one complete cycle. It is equal to the velocity divided by the frequency.

wave propagation—The transmission of RF energy through space.

whip antenna—A vertical monopole.

wire—Conductors in one of many different sizes with different kinds of insulation.

Y

yagi antenna—A combination of dipoles to increase the gain.

Downloaded from http://www.everyspec.com

Appendix B

References and Related Publications

Marine Corps

Warfigthing Publication (MCWP)

6-22	Communications and Information Systems

Reference Publications (MCRPs)

6-22A	TALK-II SINCGARS: Mutiservice Communications Procedures for the Single-Channel Ground and Airborne Radio System
6-22C	Radio Operator's Handbook (under development)

Technical Manual (TM)

2000-15/2B	Principal Technical Characteristics of U.S. Marine Corps Communications-Electronic Equipment

Army

Field Manuals (FMs)

11-32	Combat Net Radio Operations
11-43	Signal Leader's Guide
11-65	High Frequency Radio Communications
24-2	Spectrum Management
24-18	Tactical Single-Channel Radio Communications Techniques
24-19	Radio Operator's Handbook

(reverse blank)