Downloaded from http://www.everyspec.com

U.S. Department of Homeland Security
United States Coast Guard

Commandant
United States Coast Guard

2100 Second Street, S.W.
Washington, DC 20593-0001
Staff Symbol: G-SEN
Phone: (202) 267-2003
Fax: (202) 267-4742

COMDTINST M10360.3C
11 MAR 2005

COMMANDANT INSTRUCTION M10360.3C

Subj: COATINGS AND COLOR MANUAL

1. PURPOSE. This Manual promulgates Coast Guard coating and color policy and selected procedures for all vessels, buildings, structures, fixed equipment and aids to navigation.

2. ACTION. Area and district commanders, commanders of maintenance and logistics commands, commanding officers of headquarters units, assistant commandants for directorates, Judge Advocate General, and special staff offices at Headquarters shall comply with the provisions of this Manual. Internet release authorized.

3. DIRECTIVES AFFECTED. Coatings and Color Manual, COMDTINST M10360.3B is canceled.

4. SUMMARY OF CHANGES. This revision incorporates all changes to previous editions of the Coatings and Color Manual and the following significant new changes:

   a. Chapter 1:

      Revised to include guidance on the Coatings and Color Manual change process, feedback via the Naval Engineering Forum website, and points of contact for coatings guidance.

   b. Chapter 2:

      Added detailed information about safety and personal protection equipment required for high pressure water coatings removal (water jetting).

DISTRIBUTION – SDL No. 142

	a	b	c	d	e	f	g	h	i	j	k	l	m	n	o	p	q	r	s	t	u	v	w	x	y	z
A	1	1	1	1	1	1	1		1	1			1	1	1	1	1		1		1					
B		8	20	1	5	31		5	3	1	1	1	1	1	1	1	1	1	1	1	1		1	1	1	
C	1	1		3	1	3	3		1		5					1	1	2	1		1	1	1	5	1	
D	1	1	1	1				1					1					1		1						1
E				1				1						1	1											
F																										
G			1																							

NON-STANDARD DISTRIBUTION: *B:c MLCs (6 extra); *D:l SWOSCOLCOM, ATG Mayport (3 extra), ATG Norfolk (3 extra), ATG San Diego (3 extra), ATG Pearl Harbor (3 extra), TAFT Roosevelt Roads only

Downloaded from http://www.everyspec.com

c. Chapter 3:

Addressed environmental concerns with surface preparation by water jetting and highlighted anticipated future VOC regulations.

d. Chapter 4:

Revised Table 4-3 Coatings Preservation QA Checklist to check for soluble salt with conductivity measurements rather than chloride content.

e. Chapter 5:

Revised to include detailed information on testing for soluble salts. Also included are refined procedures and environmental considerations for water jetting. Removed/revised references for fiberglass repair.

f. Chapter 6:

Updated information on use of solvents and thinners and deleted Table 6-1

g. Chapter 9:

Revised list of Critical Coated Surfaces, updated information on use of rust converters, and added reference to U.S. Navy Uniform Industrial Process Instruction for powder coating application.

h. Chapter 10:

Revised the requirements for which cutters shall install photoluminescent Bull's Eyes. Additionally, clarified where photoluminescent markings are required vice suggested.

i. Chapter 11:

Updated Table 11-2: Underwater Body, Boot-Top, and Freeboard Colors. Defined International Orange as authorized color for boat collars and fixed fendering. This color will be matched as close as possible within limitations of material. Revised Table 11-3: Miscellaneous Details and Fittings to remove ambiguity about color of hooks used for boat davits, cranes, or cargo booms. Authorized COs/OICs to paint interior/exterior areas with flat black paint as necessary to reduce glare. Authorized painting bilges and cofferdams light gray to facilitate inspection.

j. Chapter 12:

Added information on finding the proper display requirements for cutter Achievement Awards.

Downloaded from http://www.everyspec.com

k. Appendix A:

Added Polysiloxane as authorized coating system for boat foam filled collars. Authorized non-working areas of buoy deck to be coated with Organic Zinc/High Build Epoxy, color to match working areas. Simplified the icebreaker classifications for defining the underwater body coating systems.

l. Appendix B:

Allowed the use of coarse slip resistant sheet material in place of MIL-D-17951 where greater durability and performance are needed.

m. Appendix C:

n. Updated the list of CG approved coatings/materials and contact information for associated vendors. Modified the definitions of the anti-abrasion coating systems for icebreakers.

o. Appendix D:

This newly drafted appendix discusses and outlines the various requirements for new ship construction.

5. REQUESTS FOR CHANGES. Recommendations for improvements to this Manual should be submitted via the chain of command to the Commandant (G-SEN) as per Chapter 1.

6. ENVIRONMENTAL ASPECT AND IMPACT CONSIDERATIONS. This Manual meets the Coast Guard's Categorical Exclusions #4, from the National Environmental Policy Act. This Manual addresses Coast Guard routine maintenance and contains no significant procedural or materiel changes.

7. FORMS AND REPORTS AVAILABILITY. Forms called for in this Manual are available in USCG ADOBE Forms on SWSIII or on the Internet at http://www.uscg.mil/ccs/cit/cim/forms1/welcome.htm or the Intranet at http://cgweb.uscg.mil/g-ccs/g-cit/g-cim/forms1/main.asp . The form Request For Directives, CG-4428, stock number 753000F020620, must be ordered from ELC and the form DOD Single Item Requisition System Document, DD-1348-6, must be ordered through the Navy, stock number 0102LF0132272.

ERROLL BROWN /s/
Assistant Commandant for Systems

Downloaded from http://www.everyspec.com

This page left intentionally blank.

Downloaded from http://www.everyspec.com

Coatings and Color Manual

COMDTINST M10360.3C

Table of Contents

Chapter	Section	Title	Page
1		**INTRODUCTION**	
	A	Purpose	1-1
	B	Change Process	1-1
	C	Exemptions	1-2
	D	Distribution	1-2
	E	Ordering	1-2
	F	Feedback	1-2
	G	Points of Contact	1-2
2		**SAFETY AND OCCUPATIONAL HEALTH**	
	A	General	2-1
	B	Operational Risk Management	2-1
	C	Storage and Disposal Hazards	2-1
	D	Paint Operations Hazards	2-1
3		**ENVIRONMENTAL LAW AND POLICY**	
	A	General	3-1
	B	Procurement	3-1
	C	Surface Preparation Issues	3-2
	D	Painting Issues	3-3
	E	Waste and Air Emission Management Reduction	3-4
	F	Waste Disposal	3-7
4		**PAINTING ORGANIZATION AND SUPERVISION**	
	A	Frequency of Painting	4-1
	B	Weather Conditions	4-1
	C	Procurement of Paint	4-2
	D	Ordering and Receipt of Paints	4-2
	E	Organizing for the Job	4-3
	F	Paint Records	4-4
	G	Contract Painting	4-5
	H	Reports of Deficient Paint	4-5

Downloaded from http://www.everyspec.com

5		**PREPARATION OF SURFACES**	
	A	General	5-1
	B	Health and Environmental Considerations	5-1
	C	Surface Cleanliness and Contaminant Removal	5-1
	D	Surface Preparation Methods	5-2
	E	Preparation and Repair of Particular Substrates	5-6
	F	Repair of Surfaces	5-12
6		**PAINT MATERIALS**	
	A	General	6-1
	B	Paint Chemistry	6-1
	C	Paint Pigments	6-4
	D	Solvents and Thinning	6-5
7		**STORAGE, PREPARATION, AND APPLICATION OF PAINT MATERIALS**	
	A	Stowage Areas	7-1
	B	Paint Distribution	7-1
	C	Containers	7-1
	D	Storage	7-1
	E	Paint Conditioning and Mixing	7-2
	F	Brush Application	7-3
	G	Roller Application	7-5
	H	Spray Painting	7-8
8		**PAINT DETERIORATION AND FAILURE**	
	A	General	8-1
	B	Types of Deterioration and Failure	8-1
9		**CUTTERS AND BOATS GENERAL INFORMATION AND MAINTENANCE PAINTING**	
	A	When To Paint	9-1
	B	Changing Painting Practices	9-1
	C	Vessel Maintenance Painting	9-2
	D	Critical Coated Surfaces	9-3
	E	Rust Converters and Stabilizers	9-3
	F	Reconstruction Primers	9-3
	G	Powder Coatings	9-3
	H	Stripe Coats	9-3

Downloaded from http://www.everyspec.com

10		**CUTTERS AND BOATS SAFETY COLORS AND MARKINGS**	
	A	Colors For Safety	10-1
	B	The Coast Guard Safety Marking System	10-1
	C	The Navy Damage Control Marking System	10-3
11		**CUTTERS AND BOATS COLORS - EXTERIOR AND INTERIOR**	
	A	General	11-1
	B	Exterior Spaces	11-1
	C	Interior Spaces	11-10
12		**CUTTER AND BOAT IDENTIFICATION MARKINGS**	
	A	General	12-1
	B	Markings	12-1
13		**FACILITIES COLORS AND IDENTIFICATION**	
	A	Exterior Colors	13-1
	B	Interior Colors	13-2
	C	Colors for Safety	13-6
14		**FACILITIES PAINTING SYSTEMS**	
	A	Introduction	14-1
	B	Tables	14-1
	C	Items Not Included in Tables	14-2
	D	Individual Item Painting Guidance	14-3
15		**FACILITIES SIGNS**	
	A	Signs	15-1
	B	Safety and Warning Signs	15-2
	C	Accident Prevention Signs	15-2
	D	Coast Guard Identification Signs	15-2
	E	Signs and Markers for Inactive Units	15-3
	F	Traffic Control Signs	15-3

Downloaded from http://www.everyspec.com

16 PROTECTIVE COATINGS FOR AIDS TO NAVIGATION

A	Steel Ocean Buoys	16-1
B	River Buoys	16-3
C	Foam Buoys	16-4
D	Plastic Buoys	16-4
E	Minor Fixed Aids to Navigation	16-4

APPENDICES

Appendix A: CUTTERS AND BOATS EXTERIOR PAINTING SYSTEM
Appendix B: CUTTERS AND BOATS INTERIOR PAINTING SYSTEM
Appendix C: COATINGS AUTHORIZED FOR USE ON CUTTERS AND BOATS
Appendix D: NEW CONSTRUCTION REQUIREMENTS FOR COATINGS AND CORROSION CONTROL OF UNITED STATES COAST GUARD VESSELS

Downloaded from http://www.everyspec.com

CHAPTER 1. INTRODUCTION

A. Purpose. The Coatings and Color Manual, COMDTINST M10360.3 (series), is published to promulgate Coast Guard coating and color policy and selected procedures for all vessels, buildings, structures, fixed equipment, and aids to navigation. While the Coatings and Color Manual, COMDTINST M10360.3C, does authorize different coating systems from revision B, implementation of this Manual does not constitute a significant change in Coast Guard policy. Accordingly, this Manual qualifies for Categorical Exclusion 33 under the National Environmental Policy Act (NEPA) and therefore does not require NEPA analysis.

Note: Aircraft and Vehicles. For information on painting or preservation of aircraft, refer to the applicable Technical Notes listing the reference drawings maintained by Aircraft Repair and Supply Center. For information on painting vehicles refer to Motor Vehicle Manual, COMDTINST M11240.9 (series).

B. Change Process. To ensure this Manual remains up-to-date, coincides with current practices, and continues to meet program needs, future change proposals shall be forwarded as specified in the following paragraphs.

1. Change proposals may be originated at any organizational level. Proposals shall be submitted by letter to Commandant (G-SEN) via their cognizant Maintenance and Logistics Center (MLC). Headquarters units and program managers may submit their proposals directly to Commandant (G-SEN).

2. MLCs shall review, endorse, and forward approved proposals to Commandant (G-SEN). Disapproved requests shall be returned to the originator with an explanation for disapproval.

3. Upon receipt, Commandant (G-SEN) will initiate the following action:

   a. Conduct a thorough investigation of each proposal to justify the need, identify possible conflicts with other directives and publications, and assess the affects of implementation.

   b. Forward the proposal to the Engineering Logistics Center (ELC) technical point of contact for a technical review.

4. The ELC responsibilities include:

   a. Conduct a technical review of all change proposals.

   b. Return any disapproved change request to the originator with an explanation for the disapproval. Maintain custody of all approved change requests for inclusion into the next change to the Manual.

   c. When directed by Commandant (G-SEN), collate all change proposals and supporting documentation into a package and forward to Commandant (G-SEN) for concurrent clearance routing and approval.

5. Commandant (G-SEN) is the final approving authority and has overall responsibility for the Coatings and Color Manual, COMDTINST M10360.3 (series).

   a. All approved changes will be promulgated by future change notices to this Manual.

Downloaded from http://www.everyspec.com

b. Changes that require immediate action shall be submitted directly to Commandant (G-SEN) via message, information copy to the ELC and MLCs.

C. Exemptions. All units shall comply with the requirements of The Coatings and Color Manual, COMDTINST M10360.3(series) unless otherwise authorized by G-SEN. G-SEN may authorize variance from this manual for color, prototype, and material substitution. For cutters and boats, ELC may authorize variance from this Manual for prototype evaluation purposes only (ELC(024) for non-standard boats, ELC(01) for cutters and standard boats). For shore facilities and buoys, Commandant (G-SEC) may authorize variance from this manual for prototype evaluation purposes only. Units seeking a waiver from this Manual for cutters and boats shall submit their request to Commandant (G-SEN), via their cognizant MLC(v), copy ELC(01) and ELC(024). Units seeking a waiver from this manual for shore facilities and buoys shall submit their request to Commandant (G-SEN) via their cognizant MLC(s) and Commandant (G-SEC). Units seeking to test new coating systems or materials on cutters and boats shall submit prototype requests to: ELC(01) for standard boats and ELC(024) for non-standard boats; via their cognizant MLC(v); copy to Commandant (G-SEN), ELC (024) if appropriate, non-cognizant MLC(v), and the Acquisition Program Manager, if appropriate. Letter reports of performance data will be described in the approval document. Units seeking to test new coating systems or materials on shore facilities and buoys shall submit prototype requests to Commandant (G-SEN) via their cognizant MLC(s) and Commandant (G-SEC).

D. Distribution. Commandant (G-SEN) shall determine distribution of this Manual. Requests for changes to the distribution should be submitted on "Request for Allowance Change" (Form CG-5323), addressed to Commandant (CG-612), via the chain of command.

E. Ordering. The Directives Publication and Reports Index (DPRI), COMDTNOTE 5600 provides guidance for ordering The Coatings and Color Manual, COMDTINST M10360.3 (series), and its associated changes. Request For Directives, (Form CG-4428), ordered from ELC, shall be completed and forwarded to the appropriate stockpoint. The Manual is also available on the Commandant (G-SEN) website at http://cgweb.comdt.uscg.mil/g-sen/gsen.htm and the Coast Guard Directives website at http://www.uscg.mil/ccs/cit/cim/directives/welcome.htm or http://cgweb.uscg.mil/g-c/g-ccs/g-cit/g-cim/directives/welcome.htm .

F. Feedback. All errors, omissions, discrepancies, questions, and suggestions for improvement regarding this Manual can be reported on the Naval Engineering Forum website at http://cgweb.lant.uscg.mil/vdiv/NEForum/ under the “Paint” category.

G. Points of Contact.

1. Manual Manager: Office of Naval Engineering, Environmental Projects (G-SEN-3), (202) 267-2003

2. ELC Coatings Technical Expert: (410) 762-6739

3. MLCA (vs) Coatings Technical Expert: (757) 628-4573

4. MLCP (vs) Coatings Technical Expert: (510) 437-5803

Downloaded from http://www.everyspec.com

CHAPTER 2. SAFETY AND OCCUPATIONAL HEALTH

A. General. Ensuring the Occupational Safety and Health (OSH) of Coast Guard personnel shall be an intrinsic element of all operations. Personnel involved in the planning and execution of painting operations and/or the storage and disposal of painting materials shall ensure that management of OSH risks are their highest priority. Application of this principle is particularly important due to the variety and potential severity of the hazards associated with the use and storage of paint systems and supplies.

B. Operational Risk Management (ORM). In accordance with Operational Risk Management, COMDTINST 3500.3 (series), personnel conducting painting operations shall apply ORM principles to manage all applicable OSH risks. Key steps to the ORM process are recognition of hazards, evaluation of the risks posed by those hazards, and use of risk vs. gain to determine how to control such hazards. The following sections discuss specific hazards often associated with paint operations; these are not all inclusive and are not a substitute for a full hazard analysis of a painting operation. The MLC Safety & Environmental Health staffs are available to assist in the ORM process.

C. Storage and Disposal Hazards. Paint and paint-related products shall be stored and disposed of in accordance with the Hazardous Waste Management Manual, COMDTINST M16478.1 (series) and Chapter 3 of this Manual.

1. Paints should only be stored in tightly sealed containers. When the top is left off the can, or when the lid is not tightly closed, volatile liquids in the paints can more easily vaporize.

2. Limit the amount of paint in the mixing areas to one day's supply and store the bulk of the paint in a separate area. Paint left over from a day's work must be tightly closed and returned to the paint storage cabinet.

3. Rags, rope, and other combustible material must be kept clear of the paint mixing room or storage area. Disposing of brushes is preferred to storing for later use. However, if wet brush stowage tanks are used, they shall be equipped with sheet metal covers to prevent evaporation of volatile solvents. For additional requirements see the Civil Engineering Manual, COMDTINST M11000.11 (series) and 29 CFR 1910.106.

4. Guard against spontaneous combustion in paint lockers. Oils of organic origin dry by oxidation and produce heat that can lead to spontaneous combustion. If this heat cannot escape, it accumulates to the point of igniting the organic materials and results in fire. Linseed oil, turpentine, and fish oils are of organic origin and can form serious fire hazards when left in rags. These rags shall not be stored in paint storage cabinets, they shall be stored in metal containers with self-closing lids.

5. Mineral spirits evaporate rather than oxidize. While spontaneous combustion will not be caused by evaporation of mineral spirits, ventilation is important to rid the area of highly explosive vapors. Containers of paints, paint thinners, paint removers, and all associated or similar materials, must be kept sealed and all rags or organic solid materials must be removed from the area and stored in metal containers with self-closing lids.

D. Paint Operations Hazards.

1. General. Many paints, paint systems, and related solvents are hazardous. During mixing and application, they can create atmospheres which are explosive, can create highly flammable mixtures, and can be highly toxic to applicants and nearby occupants. Removal of these products can also create a number of chemical and physical hazards. Whenever feasible, hazardous coating materials should be replaced with less- or non-hazardous materials. Some good general guidelines for all paint operations include:

Downloaded from http://www.everyspec.com

a. Ensure all personnel applying, mixing, or removing paints have read the product's Material Safety Data Sheet (MSDS) and are following its recommendations. Personal protective equipment, including respiratory protection and protective clothing, shall be used appropriately and proper handling procedures shall be followed.

b. Store paint and solvent containing materials and supplies in well ventilated areas, away from heating equipment, open flames, direct sunlight, and flammable/combustible materials.

c. DO NOT SMOKE, EAT, OR DRINK while mixing or applying these materials. No welding, grinding, or cutting shall be allowed in areas adjacent to painting operations.

2. Paint Application.

a. Special Hazards of Painting in Confined Spaces. A "confined space" is defined as a space that: 1) is large enough and so configured that an employee can bodily enter and perform assigned work; and 2) has limited or restricted means for entry or exit; and 3) is not designed for continuous employee occupation. A "permit required confined space" is a confined space that has one or more of the following characteristics: 1) contains or has a potential to contain a hazardous atmosphere, 2) contains a material that has the potential for engulfing an entrant, 3) has an internal configuration such that an entrant could be trapped or asphyxiated by inwardly converging walls or by a floor which slopes downward and tapers to a smaller cross section, or 4) contains any other recognized serious safety or health hazard. Guidance for confined space entry depends upon the location and function of the space in question. For Coast Guard boats and vessels in a yard or in a repair status, (e.g. dockside availability), NFPA 306 and 29 CFR 1915 apply. For Coast Guard vessels afloat, Chapter 077 of the Naval Engineering Manual, COMDTINST M9000.6 (series) and Naval Ships Technical Manual (NSTM) 074 Volume 3 apply. For shore facilities, Ashore Confined Space Entry, COMDTINST M5100.48 (series), 29 CFR 1910, 29 CFR 1915, and 29 CFR 1926 are applicable. In addition, when painting is to be conducted in a confined space, the following precautions shall apply:

(1) Fire and Explosion Hazards.

(a) Sufficient ventilation shall be provided to keep concentrations of vapors below ten (10) percent of the lower explosive limit. Frequent tests by a competent person (see "competent person" as defined by 29 CFR 1915.7) shall be made to ascertain the concentration.

(b) If ventilation fails or the solvent concentration rises above ten percent of the lower explosive limit, painting shall be stopped and the area evacuated until safe conditions are established.

(c) Ventilation shall be continued after completion of work until the space is vapor free. Tests to determine this condition shall be made after the ventilation has been stopped for at least ten minutes.

(d) Exhaust ducts shall discharge clear of working areas, away from ignition sources and away from all fresh air inlets.

(e) All motors and control equipment shall be of the explosion proof type. Fans shall have nonferrous blades. Portable air ducts shall also be of nonferrous material. Metallic parts shall be bonded and grounded.

(f) Only non-sparking paint buckets, spray guns and tools shall be used. Metallic parts of paint brushes and rollers shall be insulated. Staging shall be erected in a manner that ensures that it is non-sparking.

Downloaded from http://www.everyspec.com

(g) Only explosion proof lights, approved for use in Class I, Group D atmospheres shall be used. A competent person shall inspect all power and lighting cables to ensure the insulation is in acceptable condition, they are properly placed, and there are no connections or splices within the area of work or within fifty (50) feet of the area of work.

(h) No matches, cigarette lighters or other ferrous articles shall be taken into the areas where work is being done.

(i) All solvent drums or cans taken into the work area shall be placed on nonferrous surfaces and shall be bonded and grounded. Vessels being filled from a drum (or can) shall be bonded to the drum while materials are being transferred.

(j) All personnel protective equipment shall be non-sparking, e.g. rubber soled safety shoes.

(2) Personal Protective Equipment.

(a) The face, hands, eyes, head and other exposed parts of personnel working with paints shall be protected. Coveralls and other clothing shall be cotton and shall conform with applicable Material Safety Data Sheets for the products being used.

(b) Personnel shall be protected by Type C continuous flow air line respirators using properly filtered and cleaned compressed air meeting breathing air standards.

(c) When working in confined spaces, a safety observer, trained and equipped to rescue and summon help, shall be posted outside of the work area in a position to observe the workers.

(d) Portable ladders or like means of egress shall be provided. In areas where egress is difficult, tag lines and safety harnesses shall be used.

b. Special Hazards of Spray Operations.

(1) Fire and Explosion. The possibility of an explosion varies with the flash point of the material and the ambient temperature of the air. The chance of explosion for outside painting is less than in enclosed spaces. Fire hazards associated with outside painting are essentially limited to the immediate vicinity of the spraying.

(a) During spray painting, atomizing produces much more solvent vapor than would be expected by evaporation at temperatures that exceed the flash point. Solvent concentrations during spray painting operations may produce ideal conditions for ignition.

(b) Allow no smoking, welding, burning, or other flame or spark-producing operations such as chipping or grinding, electrical repairs or electric bulb changing within a work area while painting and for at least one hour after painting has ceased.

(c) In any case where interior spray painting is being done with low flash point materials (flash point below 100°F.), follow all fire and explosion precautions noted for painting in confined spaces.

(2) Airless Spray Equipment. Airless spray guns operate at pressures high enough to inject paint into human flesh. Paint and related products injected into tissue can migrate and cause dangerous infection. If injured, seek immediate medical attention. It is equally dangerous to operate an airless gun when the cap has been removed. This could release a large volume of liquid, and great bodily harm could result. The following precautions should be observed:

Downloaded from http://www.everyspec.com

(a) Check all hose connections and fittings for leaks. Be sure all parts used are designed and intended for high-pressure use. Ensure the spray cap guard is always in place.

(b) Keep a constant check on the hose to make sure it is free of worn spots, breaks, cracks, etc. Keep the hose away from moving parts of machinery, sharp edges, and chemicals.

(c) Fingers shall be kept off the airless spray gun trigger except when gun is in actual use and it should never be pointed at anyone.

(d) Ensure that pump pressure is released before the gun or any parts are disconnected.

(e) If materials used are highly flammable, the object or surface being sprayed, as well as the spray gun, motor, and pump, should be grounded. This is extremely important since the spray gun may accumulate an electrostatic charge.

(3) Health Hazards. Although harmful human health effects are associated with all paint processes, the potential for these to occur are increased due to the high levels of airborne paint components and solvents created during spray painting. Some examples of these include: Chromate materials present in primers can cause dermatitis, ulceration of the exposed skin and stomach or lung cancer. Antifouling paints used on vessels and buoys contain toxic materials that are hazardous upon skin contact or ingestion/ inhalation. Epoxy paints can cause dermatitis upon skin contact and some individuals may develop an allergy or sensitization upon exposure to small amounts of the material. The solvents commonly used in paint systems exhibit a wide range of toxicity. The less toxic solvents such as mineral spirits, some petroleum naphthas, and ethyl alcohol produce symptoms similar to those associated with alcohol intoxication. Others such as toluene, xylene, methyl ethyl ketone (MEK) and methyl isobutyl ketone (MIBK) produce symptoms of intoxication at much lower concentrations and in addition, may produce chronic damage to organs and/or cause extreme irritation to skin, eyes, and nose. All solvent materials found in non-water based paints can be hazardous to health if adequate protective measures are not taken; chronic exposure may cause permanent nervous system damage.

(a) Ensure that all precautions on the MSDS, including wearing of appropriate personal protective equipment, are followed.

(b) Where practical, all spray finishing operations should be performed in ventilated spray booths or spray rooms. Spray booths and spray rooms shall conform to paragraph 1910.107 of the General Industrial Standards 29 CFR. Semiannual tests of hazard control ventilation systems in paint spray booths are required by Ashore Confined Space Entry, COMDTINST M5100.48 (series). Assistance can be requested from the cognizant MLC (kse). Respirators certified by the National Institute for Occupational Safety and Health (NIOSH) are required when spraying in booths. Painters working in walk-in booths with inadequate air velocities shall wear airline respirators; when working in walk-in booths having adequate airflow but when painters can potentially be located downstream of the object painted, paint spray respirators shall be worn. For smaller booths where the painter stands outside the booth and airflow is inadequate, paint spray respirators shall be worn; small booths with adequate velocity eliminate the need for wearing any respiratory protection. Guidelines for selection of respiratory equipment when spraying in confined areas, enclosed areas, and open areas are the same as for spray booths. Use the airline respirator unless it has been demonstrated that a filter type will provide comparable protection. Particular attention shall be paid to coatings containing coal tar, chromates, antifoulants and toxic solvents. Always use an airline respirator when applying polyurethanes (See Para B.16 of Chapter 6 for polyurethane restrictions). In all cases where respirators are used, a respirator program shall be initiated in accordance with Technical Guide: Practices for Respiratory Protection, COMDTINST M6260.2 (series).

Downloaded from http://www.everyspec.com

(c) Skin Protection. To reduce the danger of absorbing chemicals through the skin, painters shall wear protective clothing. Gloves should be used whenever possible and should be impermeable to the solvent being used. MLC (kse) staffs may be consulted regarding glove selection.

(d) Medical Monitoring. All personnel engaged in spray painting operations more than 30 days per year shall be enrolled in the Occupational Medical Surveillance and Evaluation Program (OMSEP) as described in the Safety and Environmental Health Manual, COMDTINST M5100.47 (series) and the Medical Manual, COMDTINST M6000.1 (series).

3. Paint Removal.

a. Special Hazards for Paint Removal in Confined Spaces.

(1) Prior to the start of any work in confined spaces, a qualified IH or gas free engineer shall assure the existence of a safe working atmosphere. Where the spaces have contained volatile liquid, paints, or toxic materials or irritants, or are immediately adjacent to such materials, the atmosphere shall be tested for contaminants and checked for residues of these materials. This atmosphere shall be checked periodically during the paint removal operations.

(2) Where tests show a deficiency of oxygen in the space (other than in spaces intentionally inerted against fire or explosion) no work shall commence until the application of appropriate ventilation measures have been effective.

b. Health Hazards. The major hazards associated with paint removal operations are those of explosion, skin or eye injury, respiratory disease from inhalation of abrasives, electrical shock from removal equipment, and industrial illnesses from inhalation of hazardous paint dusts containing chromate, lead, inorganic tin or copper compounds. All removal operations, including chipping and painting require use of proper protective equipment and procedures to control risk. For guidance, refer to the cognizant MLC (kse). Some examples of these specific health hazards are:

(1) Heavy metals such as lead, chromates or organic tin compounds present in vessel primer, antifouling paints and primer coatings can accumulate in the body from ingestion and/or inhalation. Chronic exposures can produce disabling illness and possible death.

(2) Exposure to dust from plastic type (vinyl) paints may result in severe respiratory and skin irritation and some sensitive individuals may show an allergic response.

(3) Special attention must be given to operations where chromate coatings are abraded since inhalation or ingestion can cause various adverse health effects, including cancer.

(4) Biocide materials present in antifoulant coatings can produce severe burns upon skin or eye contact, can be transported into the body through the skin, and may produce damage to internal organs if inhaled or absorbed into the body. Hazardous exposures can result from biocidal antifouling coating dust in abrasive blasting, mist or vapor from spray painting and fume from cutting or burning painted surfaces. Although organotin antifouling coatings are now prohibited and have not been specified in a number of years, there is the possibility that they may still be found. Units shall hire licensed contractors for the removal of organotin paint. Coast Guard personnel are not authorized to perform this work.

Downloaded from http://www.everyspec.com

(5) A health hazard secondary to any blasting operations may result from supplying contaminated breathing air to air supplied respiratory equipment. Oil, water, carbon monoxide and other products of incomplete combustion may be present in breathing air if proper precautions are not taken. Refer to Technical Guide: Practices for Respiratory Protection, COMDTINST M6260.2 (series).

c. Abrasive Blasting. It has become general practice to enclose large, high volume blasting operations and provide dedicated ventilation/collection systems. In evaluating the need for enclosure of small, low volume blasting operations, primary consideration should be given to the toxicity of the abrasive used and to any pulverized coatings, the related potential for airborne contamination of adjacent work or living spaces, as well as compliance with EPA and State air pollution laws. Wet blasting may adequately suppress dust when operations such as blasting a ship's hull must be performed outdoors. In most states, open air blasting is not permitted through regulation of visible emissions. In some states, it is specifically prohibited. These constraints leave enclosed and vacuum blasting as the only viable alternatives.

(1) Equipment shall be approved for the intended use. Hoses and fittings shall be grounded to prevent shock from static electrical charges. Hose lengths shall be joined by metal couplings secured with adhesive.

(2) Nozzles shall be similarly attached to the hose, with fittings designed to prevent unintentional disengagement of the nozzle. The nozzle end shall be provided with a deadman control to provide direct "fail-safe" cutoff of the abrasive in the case of loss of control of the hose by the operator. Hoses and all fittings shall be inspected frequently to assure replacement prior to the development of unsafe deterioration or wear.

(3) All equipment and metallic working surfaces shall be interconnected to a common ground to avoid the development of critical electrical potentials. Operators shall check grounding connections prior to the start of work.

(4) During the application of the abrasive, pressure drops within the hose lines often cause surges that can throw operators off staging or scaffolding. Operators working on scaffolding or elevated staging shall be protected by appropriate fall protection equipment such as safety harnesses and lines.

(5) In the application of the abrasive, the operator shall assure the use of straight hose runs, or wide, sweeping curves to prevent the erosive action resulting from sharp bends in the hose, and the possibility of blowouts or similar personnel hazards.

(6) Types of Abrasive: Various types of abrasive materials are used in blasting operations, each having its own particular advantages. The hazard potential of these various abrasives also varies considerably. Use of Silica is specifically prohibited; consult with the cognizant MLC (kse) regarding the risk vs. gain of other types of abrasives.

(7) Personal Protective Equipment.

(a) Head, Respiratory, and Eye Protection. Protective gear must be worn by all personnel consisting of hoods or special helmets integrated with special masks and air respirators of a positive pressure. Eye protective gear shall be provided as an integral part of the helmet, or shall be approved eye shields complying with American Standard Safety Code Z issued by ANSI. Coast Guard personnel engaged in or located in the immediate vicinity of abrasive blasting operations (enclosed or otherwise) shall wear approved airline abrasive blasting respirators. In unusual circumstances where the abrasive blasting respirator cannot be used due to safety or operational considerations, (tight places) a type C supplied air respirator with

Downloaded from http://www.everyspec.com

appropriate fabric hood and sheath should be used. Only respirators that utilize continuous flow or pressure demand regulators shall be used. In all cases where respiratory equipment is used, a respiratory protection program, shall be established as defined and described in Technical Guide: Practices for Respiratory Protection, COMDTINST M6260.2 (series).

(b) Hearing Protection. All Coast Guard employees engaged in sandblasting operations, whether as an operator or helper, shall wear double hearing protection (earplugs and earmuffs). All other personnel in the vicinity of the operation must wear double hearing protection unless a sound level survey indicates that single hearing protection (earplugs or earmuffs) is adequate. Personnel shall be enrolled in the Coast Guard Hearing Conservation Program in accordance with the Safety and Environmental Health Manual, COMDTINST M5100.47 (series).

(c) Foot Protection. Boots or shoes (rubber sole or equivalent, with steel toes fully covered by leather or other impact-absorbent materials) and rubber or leather gauntlets shall be worn.

(d) Skin Protection. Abrasive-resistant clothing that leaves no portion of the body unprotected shall also be worn.

(8) Engineering Design. Planning and design of new abrasive blasting facilities should be done in accordance with the reference criteria cited in Technical Guide Practices of Respiratory Protection, COMDTINST M6260.2 (series).

(9) Breathing Air Systems. Compressors shall be constructed and situated to avoid entry of contaminated air into the system and suitable in-line air purifying sorbent beds and filters installed to further assure breathing air quality. Systems shall have alarms to warn of compressor failure or overheating. Oil lubricated compressors shall have carbon monoxide alarms. Refer to Technical Guide Practices of Respiratory Protection, COMDTINST M6260.2 (series).

(10) Medical Monitoring. All personnel engaged in abrasive blasting more than 30 days per year shall be enrolled in the Occupational Medical Surveillance and Evaluation Program (OMSEP) as described in the Safety and Environmental Health Manual, COMDTINST M5100.47 (series) and the Medical Manual, COMDTINST M6000.1 (series).

d. Water Jetting (also called hydroblasting). Run off from water jetting operations must be contained, if not collected for processing, in order to prevent pollutants from entering the ground, waterways, storm water systems, or sewer systems. In considering the degree of containment or collection required, compliance with EPA and State pollution laws must be considered. Although not considered to be as hazardous as abrasive blasting, hydroblasting uses water at high pressure which can cut through a body, causing serious injury or death. The precautions and protective personnel equipment described for abrasive blasting, and the special precautions given in the following paragraphs shall apply.

(1) Precautions.

(a) Visual Operating Signals. Prearranged visual signals shall include: Start, Stop, Increase Pressure, Decrease Pressure (for the pump), Shut Down Engine, and Bleed Pressure.

(b) Pump Operator. One person shall be stationed at the pump at all times to monitor running condition, control reserve water level, make pressure adjustments, handle emergencies (such as a ruptured hose), perform emergency procedures (stop engine, bleed pressure), and clear hoses at ground or pump location. The pump operator shall maintain visual contact with the gun operator and his assistant, and respond immediately to their signals. Where this is not possible, audio signals shall be used. Pump operators shall wear hearing protection as prescribed in the personal protective equipment requirements for abrasive blasting.

Downloaded from http://www.everyspec.com

(c) Gun Operator. Two workers shall be assigned to each gun being operated and shall relieve each other as required. The assistant shall keep hoses clear of all obstructions, assist the operator as required by supporting the hose weight, be alert to potential hazards which may be encountered by the operator, and take corrective action as required. The assistant shall also observe work done by the pump operator, point out missed areas, and provide visual signals to the pump operator as necessary. The gun operator and assistant shall wear wet-weather gear, face shield or goggles, work gloves, shoes with antiskid soles, and when working from a scaffold or other elevated position, a safety harness.

(d) Equipment and Operating Precautions. Hydroblast equipment shall be properly maintained because operation of damaged equipment at high pressure is dangerous. Staging shall be stable and correctly positioned so that the worker can hold the gun at a 60-degree angle with tip approximately 8 to 12 inches from the surface being blasted.

(e) The hydroblast gun shall never be pointed at other personnel. The water stream is capable of severing an arm or leg.

(f) The straight jet nozzle shall be used only in special cases such as cleaning weld seams or crevices. Caution shall be used, because the water stream will rapidly cut through paint to bare metal.

(2) Personal Protective Equipment. The following protective personnel equipment requirements shall apply in addition to the protective personnel equipment requirements described for abrasive blasting.

(a) Skin Protection. Protective clothing shall be worn that is specifically designed for skin protection in water jetting operations. Protective clothing shall protect against water jet penetration and shall be water resistant.

(b) Footwear. In addition to the requirements described for abrasive blasting, footwear shall have slip resistant soles.

Downloaded from http://www.everyspec.com

CHAPTER 3. ENVIRONMENTAL LAW AND POLICY

A. General. The activities associated with surface preparation and painting are regulated because of their potential to release significant amounts of pollutants (via air emissions and residual wastes), potentially endangering both human health and the environment. When conducting surface preparation and painting operations, all units must comply with applicable federal, state, and local laws. When inport, vessels should also confer with their host shore command and/or Senior Officer Present Afloat to determine if there are any additional requirements. Units are also responsible for complying with the Commandant's policies regarding the reduction of hazardous waste and materials as promulgated in The Hazardous Waste Management Manual, COMDTINST M16478.1 (series). Additionally, a summary of environmental laws and responsibilities are found in the Commanding Officer's Environmental Guide COMDTPUB P5090.1 (series).

B. Procurement. Maintaining and refurbishing equipment through painting can produce large amounts of hazardous waste and air emissions and is a particular focus for environmental regulatory agencies. Paying careful attention to environmental regulations is extremely important to reducing disposal costs and environmental liability associated with this activity.

1. Toxic Materials In Paints. Use of paints containing toxic materials is prohibited unless specifically required by COMDTINST. Coatings with toxic materials will be eliminated as acceptable substitutes with less toxicity are made available. The following is provided to clarify use of coatings containing toxic materials:

   a. Lead. Paints shall contain no more than 0.06% lead by weight.

   b. Chromate. Paints containing chromate pigments are prohibited except as primer for aircraft.

   c. Mercury. Paints containing mercury are prohibited.

   d. Organotin Antifouling Paints. Organotin paints are those that contain trivalent tin compounds such as tributyl tin and are registered by EPA because of their toxicity. Organotin paints may only be removed by state licensed contractors in accordance with state and federal laws. CG personnel are not authorized to apply, remove, or maintain organotin paints or to have a license to apply or remove these coatings. Organotin coatings are not authorized on any Coast Guard cutters or boats.

   e. Zinc. Units are authorized to use paints containing zinc dust. However, paints containing zinc dust are more prone to containing lead. Therefore, ensure paints with zinc dust contain no more than 0.06% lead by weight.

   f. Isocyanates. Paints containing isocyanates, including Toluene Diisocyanate (TDI), Hexamethylene Diisocyanate (HDI) and Diphenylmethane Diisocyanate (MDI), are prohibited unless specifically required by this manual. See Polyurethane Coatings Exposure Control, COMDTINST 6260.30 (series) for further clarification.

Downloaded from http://www.everyspec.com

g. Coal tar epoxies. Coal tar epoxies are specifically prohibited for any application.

2. Volatile organic compounds (VOCs). Paints can produce significant emissions of VOCs when the solvents in the paint volatilize as the paint dries. Surface preparations may also emit VOCs if solvent cleaners or paint strippers are used. Release of VOCs in painting operations pose a health hazard to workers and also cause ground-level smog. The following subparagraphs apply to marine paints only. VOC content for non-marine paints shall adhere to all federal, state, and local architectural codes. Guidance on federal VOC architectural requirements can be found at http://www.epa.gov/ttn/atw/index.html.

   a. The Coast Guard has adopted a fleet wide maximum as applied VOC content standard which meets the Federal Control Technique Guideline for Shipbuilding and Ship Repair Operations (Surface Coating). Marine paints, thus, shall be lower than or equal to the following maximum *as-applied* (i.e. at time of application to the substrate) *VOC content limits*: 400 grams/liter for antifouling bottom paint, and 340 grams/liter for all other marine paints. VOC regulations are expected to be significantly reduced in the near future to 340 gram/liter for antifouling bottom paint and 250 gram/liter for all other marine paints.

   b. Additionally, units must check to ensure that paint systems meet any state or local requirements for as applied VOC content limits that are more stringent than paragraph B.2.a (above).

   c. Units requiring assistance in determining their state and local VOC limits should contact: for PACAREA MLCP(V) at (510) 437-5803 and for LANTAREA, CEU Cleveland at (216) 902-6255, CEU Miami at (305) 278-6708, CEU Providence at (401) 736-1746, or MLCA(S) at (757) 628-4248.

C. Surface Preparation Issues. Depending on the method used, surface preparation operations can generate significant air emissions or potentially hazardous waste. Air emissions could include release of particulate emissions from paint chips or blasting abrasives, or emitting VOCs and hazardous air pollutants (HAPs) arising from the use of solvent cleaners. Potentially hazardous waste could include the residual waste of paint chips, or spent abrasives from blasting, or water contaminated with solvents. These emissions and wastes can cause health problems and damage the environment. For this reason, proper precautions must be taken. Regulations must be followed to prevent environmental violations.

1. Lead-Based Paint (LBP). Lead-based paint (LBP) is a paint or other surface coating containing lead equal to or in excess of 1.0 milligrams per square centimeter or 0.06 percent by weight of the dried paint film. All federal, state and local requirements relating to LBP activities apply to CG painting activities. If surface preparation involves disturbing or removing lead-based paint, contact your servicing health and safety and servicing environmental staff to make sure you have the proper equipment and understand required procedures.

2. Asbestos. If surface preparation involves disturbing or removing asbestos containing material, special legal requirements may apply. Contact your servicing health and safety and servicing environmental staff. Also, refer to the Asbestos Control Exposure Manual, COMDTINST M6260.16 (series).

Downloaded from http://www.everyspec.com

3. Abrasive Blasting. In states enforcing a "no visible dust" rule, abrasive blasting must be performed inside a temporary structure. Knowledge of state and local regulations is critical; review the regulations applicable to your area for visible dust rules as well as any specific requirements for the temporary structure construction.

4. Water Jetting. Paint chips, debris and contaminants from water jetting operations are considered "pollutants" under the Clean Water Act and may also qualify as hazardous waste. Run off from water jetting operations must be contained, and may potentially require collection for processing before release in order to prevent pollutants from entering the ground, waterways, storm water systems, or sewer systems. In considering the degree of containment or collection, processing and disposal required, compliance with Federal (EPA), State and local pollution laws must be considered. Usually, state and local authorities will grant permits to allow waste water to be disposed of in the sewage treatment system as long as the water does not contain toxins which can kill the microbes used in the treatment process. Contact your servicing environmental staff for advice on proper waste water disposal procedures.

5. Paint Removal on Cutters and Boats. Top-side maintenance surface preparation for cutters and boats poses special problems in controlling paint chips and dust so that they are not released to the water. The Hazardous Waste Management Manual, COMDTINST M16478.1 (series) requires that Commanding Officers and Officers in Charge of vessels appoint a Hazardous Waste Coordinator (HWC). The HWC shall develop policy to ensure that all equipment (such as vacuum-equipped surface prep tools) and containment systems (such as drop cloths and wrapping materials) are working and in place such that no paint chips or dust are allowed to enter the water. Paint chips and dust are considered "pollutants" under the Clean Water Act and may also qualify as hazardous waste. Servicing health & safety and environmental staff can assist in determining the proper procedures to use for top-side surface preparation.

D. Painting Issues. Depending on the method used, painting can produce significant air emissions or potentially hazardous waste. Air emissions could include release of VOCs and hazardous air pollutants (HAPs) from paint overspray, or from equipment cleaning solvents, or from the solvent volatizing as the paint dries. Potentially hazardous waste could include the residual waste of leftover paint and solvents, or spent equipment. These emissions and waste can cause health problems and damage the environment. For this reason, proper precautions must be taken. Regulations must be followed to prevent environmental violations.

1. Ensure that the paint is lower than or equal to the maximum *as applied* (i.e. at time of application to the substrate) *VOC content limits* set out in this chapter or, if more stringent, state and local as applied VOC content limit requirements (see paragraph B.2.a and b).

2. Paint thinners, other than water, usually have a very high VOC content; thus, adding a thinner to a paint increases the paint's VOC content (transforming a low VOC content paint to a high VOC content paint). Minimize the use of paint thinner. Paint thinners should not be added unless necessary. Paint thinner that is a substance other than water will not be used unless the following condition exists: prior to any paint thinner being added, the paint has a VOC content that is lower than the maximum *as applied VOC content limit*. If this condition exists, then thinner can be added, but only in an amount that ensures that the paint with thinner added is lower than or equal to the maximum *as applied VOC content* limit. Too much thinning of

Downloaded from http://www.everyspec.com

paint reduces its dry film thickness giving shorter life to the paint system. Use of thinners should be minimized as they defeat the purpose of using low VOC coatings.

The following formula may be used to ensure that the as applied VOC content does not exceed the CG allowable limits.

$$R = \frac{(V_S)\,(\text{VOHAP limit}) - M_{VOC}}{D_{th}}$$

where:

R= Maximum allowable thinning ratio for a given batch, i.e., Gallons of thinner

V_s = Volume fraction of solids in the batch as supplied (found on product data sheet or MSDS).
VOHAP limit = Maximum allowable as-applied VOHAP content of the coating (grams VOHAP/ liter solids). This is not the same as maximum VOC level. Use 765 grams/liter solids for antifouling coatings and 571 grams/liter solids for all other coatings.
M_{VOC} = VOC content of the batch as supplied (found on product data sheet or MSDS).
D_{th} = Density of the thinner in grams/liter (found on product data sheet or MSDS).

Following is a practical example for the above calculation of the maximum allowable thinning ratio using Ameron PSX-700 with Amercoat 911 thinner.

V_s = 90% = 0.90 (Taken from product data sheet)
M_{VOC} = 120 grams/liter (Taken from product data sheet)
D_{th} = 7.34 pounds/gallon = 880 grams/liter (Taken from MSDS)

$$R = \frac{(0.90)(571 \text{ grams/liter solids}) - 120 \text{ grams/liter}}{880 \text{ grams/liter}} = 0.45$$

Therefore, a maximum of 0.45 gallons (1.8 quarts) of Amercoat 911 thinner can be added to one gallon of PSX-700.

3. Spray painting operations require knowledge of and compliance with all federal, state and local requirements relating to the control of air pollution. Prior to starting spray painting operations, painting supervisors shall ensure their procedures comply with the law and obtain all necessary permits (including state and local permits). If possible, conduct spray painting inside a booth or prep station rather than an open bay. If a booth or prep station is used, ensure it is appropriately constructed and ventilated and workers use proper protection.

E. Waste & Air Emission Management Reduction. Disposing of waste paint is costly. The best way to reduce disposal costs is to carefully estimate how much paint is required for a particular application and have little or

Downloaded from http://www.everyspec.com

nothing remaining for disposal. In addition to careful procurement, stocking, and application practices, there are a variety of other methods to reduce waste which also may decrease air emissions:

1. Solvents.

   a. Solvents are often used to clean equipment used in applying oil-based paints. In some instances, you can completely avoid using solvents for equipment cleanup by painting with disposable brushes, rollers, paint cans and trays. When using solvent to clean spray guns and lines, you can recycle it by storing for several days to allow the pigment and resin to settle out. Separate the paint fines by pouring off the solvent and reusing it to clean equipment. Remember, remaining sludge is hazardous wastes and must be disposed of in accordance with applicable regulations. Avoid using solvent to wipe down or clean painted surfaces and substitute a detergent or adhesion promoter.

   b. Some units have been able to recycle solvents by contracting to have the dirty solvents distilled. Units may install solvent stills for recycling. However, the stills must have adequate fire suppression systems and they must be isolated from flammable materials. Permits may be required, so it is necessary to check with your servicing environmental staff before installing a solvent still.

2. Abrasive Blasting Grit. In order to maximize usage of reusable grit, units shall recycle abrasive blast grit by processing through a separator to separate the paint dust and grit that is too fine to use. Resulting waste materials are likely to qualify as hazardous wastes and must be disposed of properly. Replace the spent material with fresh grit. Pick a grit that generates the least hazardous waste and is still cost effective for your unit. The advantages and disadvantages are outlined as follows:

   a. Slag can usually be recycled 3-4 times. Slag usually cleans painted surfaces much faster than mineral grit.

   b. Mineral grit like aluminum oxide and garnet can usually be recycled 5-7 times. Mineral grit cuts unpainted steel faster than slag and produces less visible dust.

   c. Steel shot can be recycled up to 20 times; however, the initial cost of steel shot is greater and its higher weight per equal volume means that disposal costs may approximate mineral grit disposal costs. Also, the surface profile created by steel shot does not allow a coating to adhere as well as the surface profile created by mineral or slag grit.

3. Shelf Life Extension Program. To minimize waste, CG units, cutters and boats shall extend the shelf life of coatings and use them when it is reasonable to expect they will work correctly. This applies to all paints; military and federal specification coatings as well as commercial products. Regardless of what other military or government manuals dictate, if a coating passes the inspections outlined in this chapter, and it is reasonable to believe that the coating will work correctly, then extend the shelf life for one year by filling out a shelf life extension label like the one below and fasten the label to the can with heavy duty clear tape.

Downloaded from http://www.everyspec.com

Previous shelf life expiration date:
New shelf life expiration date:
Signed:
Date:

a. If it is not reasonable to expect the coating to work correctly, the material should be discarded as hazardous waste. If possible, use paint before the storage life expiration date through careful inventory management.

b. Inspections. New coatings and coatings with expired shelf life should not be used if they do not pass the following tests:

1. Mix the paint. If the paint does not develop a smooth even consistency after 10 minutes in a power shaker, it is not suitable for use.

2. Apply the paint to a test patch. If it does not brush or spray evenly and consistently or if it does not dry in the correct amount of time to the appropriate hardness, it is not suitable for use.

3. Check the adhesion on oil based and water based paints. Cut a series of cross-hatched lines into the dried paint film with a razor blade. Then apply and remove a strip of duct tape. If 90% of the paint stays in place, it is suitable for use.

4. Check the adhesion of epoxy paints. Tap the dried paint film with a hammer 10-20 times with enough force to drive a nail 3/4" into a piece of pine. If the paint does not stay intact, it is not suitable for use.

5. On previously opened cans of paint, strain the paint through cheese cloth to separate clotted material and use the coating for a non-critical application if it appears normal.

6. Do not extend shelf life on paints with; improperly sealed or corroded containers, two part epoxy paints stored above 140°F, water based paints which have been frozen, or oil based paints which do not mix to a smooth consistency.

7. Some state hazardous waste laws impose fines for storing paint that is past the manufacturer's storage life expiration date. It may not be possible to extend shelf life in these areas.

c. Paint Storage Life. Most two-part epoxies can be properly stored in ambient temperature conditions and remain functional for up to 10 years. Water based and oil based paints, can be stored at ambient

Downloaded from http://www.everyspec.com

conditions for up to 3-5 years. Previously opened cans of water based and oil based paints are usually not suitable if stored for longer than one year. Previously opened cans of unmixed two-part epoxy paint in good condition may still be good after 3-4 years storage.

F. Waste Disposal. Surface preparation operations can generate potentially hazardous waste, including the residual waste of paint chips, spent abrasives from blasting or contaminated water. Painting operations can generate significant amounts of potentially hazardous waste, including leftover paint and solvents, spent equipment, rags and other materials contaminated with paint.

1. Waste Water. After water is used in blasting surfaces or to clean equipment, the water may become waste water that contains hazardous materials, e.g., biocidal antifouling agents, solvents and petroleum products. This waste water may not be poured on the ground or into the storm water or sewage system. Disposal of waste water used for clean up of paint is governed by federal, state and local laws. Usually, state and local authorities will grant permits to allow waste water to be disposed of in the sewage treatment system as long as the water does not contain toxins which can kill the microbes used in the treatment process. Contact environmental compliance or legal staff for advice on proper waste water disposal procedures.

2. Antifouling paint. Waste associated with antifouling bottom paints may be collected separately from the typically less toxic topside and interior paints.

3. Hazardous Waste Management. To determine if the residual waste is hazardous, refer to the Hazardous Waste Management Manual, COMDTINST M16478.1 (series). Hazardous waste must be managed and disposed of in accordance with the Hazardous Waste Management Manual, COMDTINST M16478.1 (series). Particularly relevant sections include:

   a. Chapter 4 GENERATION OF HAZARDOUS WASTE; Section 4-B, Hazardous Waste Determination; Figure 4-2 Summary of characteristics and properties of hazardous waste under 40 CFR 261; and, Figure 4-3 Common hazardous waste items at USCG units.

   b. Chapter 7, MANAGEMENT/DISPOSAL PRACTICES FOR TYPICAL CG WASTE ITEMS; Section 7-F, Paint Slops and Waste Paint; Section 7-G, Solvents; and, Section 7-J, P Blasting Grit.

   c. Chapter 8, STORAGE AND CONTAINER REQUIREMENTS (for hazardous waste).

Downloaded from http://www.everyspec.com

This page left intentionally blank

Downloaded from http://www.everyspec.com

CHAPTER 4. PAINTING ORGANIZATION AND SUPERVISION

A. Frequency of Painting .

1. General. The principal objective of painting is to prevent deterioration of the substrate at a minimum cost. The recommended method of protection is a condition-based paint program i.e., continuous inspection and painting as necessary. Condition-based painting is preferable to completely repainting after the original coating has failed because the latter results in an unsightly surface, expensive preparation before repainting, and possible deterioration of structural members. Condition-based painting is preferable to complete repainting at pre-determined intervals where repainting may be too late in cases where deterioration has already taken place, but completely unnecessary in others. Careful record keeping of paint activities is also recommended to aid in selecting the best paint system and painting procedures.

2. Interior Surfaces. Interior surfaces are generally painted more frequently than necessary, the painting being done for appearance rather than protection. Excessive repainting results in paint film failure due to films that are either too thick or incompatible.

   a. Since interior paint films are generally renewed due to yellowing or staining rather than mechanical film failure, the paints selected for interior use are designed to hold up under repeated washing. Scrubbing the surface with detergent and water will usually result in a reasonably clean, fresh appearance.

   b. Interior painting should normally be accomplished at intervals of 3 years or greater. Shorter intervals result in wasted time and paint on surfaces where the paint film is intact and only needs to be cleaned.

   c. Excessive coats of interior paint will compromise the non-flaming and low smoke generation properties of the paint.

3. Exterior Surfaces. The frequency of painting should be optimized to repaint prior to failure of the paint film. Touch-up painting between the scheduled periods of large scale repainting is adequate to protect the surface and impart a satisfactory appearance. See Chapter 9 – Cutters and Boats General Information and Maintenance Painting for more detailed information on frequency of painting for cutters and boats.

4. Preventive Maintenance. Paint systems do not deteriorate uniformly. Even when they are applied by skilled painters, some pinholes, gaps, and breaks at sharp edges or seams are often present. Left unattended, corrosion and deterioration will initiate at these points. Spot painting describes the painting of only the small or localized areas in which the coating has begun to deteriorate. Not only does spot painting save costly surface preparation and repainting of large areas, but the life expectancy of the paint system and structure can be extended considerably. Furthermore, when repainting is desired to achieve adequate film thickness or for uniform appearance, it can be accomplished economically with the minimum number of coats, since the surface will be in sound condition. An added advantage derived from preventive maintenance is the detection of faulty structural conditions or problems caused by leakage or moisture.

B. Weather Conditions. Weather conditions for painting are an important factor for exterior painting. There are moisture/humidity tolerant coatings, such as the Euronavy ES301 system, that are not dew point critical. However, in the absence of specific manufacturer guidelines to the contrary, the following requirements shall be adhered to.

1. To ensure a dry surface, the temperature of the surface must be 5°F above the dew point temperature. If the temperature of the surface to be painted is at or below the dew point temperature, condensation may blister the paint film. Visual examination of the surface for condensation cannot be relied upon since condensation cannot be detected until it is in an advanced stage. The dew point is determined by the relative humidity in relation to the air temperature.

Downloaded from http://www.everyspec.com

2. During winter, spring and fall the combination of short days and extreme weather conditions limit available time for paint application. Delay the start of painting in the day until dew and frost have disappeared and the temperature of the surface is 5°F above the dew point. The painting must be further shortened by stopping the work at least two hours before the temperature of the surface is expected to drop below the dew point. This allows the paint time to set before being exposed to moisture. Regardless of the season or temperature, do not paint in fog, mist, drizzle, or rain.

C. Procurement of Paint. Open purchase procurements should not be used unless a government source of supply is not available or when emergent conditions exist and a government source cannot meet delivery requirements. For a complete description of procurement regulations, see the Coast Guard Simplified Acquisition Procedures Handbook, COMDTINST M4200.13 (series). GSA offers a variety of procurement vehicles to obtain coatings and supplies with or without a National Stock Number (NSN).

1. GSA Advantage. Online shopping service is an electronic ordering system designed to make products and services offered through GSA available online. The system allows users to browse, perform keyword searches on product-specific information and assemble and place an order. When ordering through GSA Advantage, a Smart Pay Card may be used, orders may be placed via the standard MILSTRIP procedures or an order faxed directly to the contractor.

2. Contractor-Direct Ordering. Orders may also be placed directly with contractors on a Multiple Award Schedule, also known as Federal Supply Schedule. This is a listing of contracts awarded by GSA to responsible companies that offer commercial services or products, at varying prices, provided that prices are determined fair and reasonable.

3. Military Interdepartmental Purchase Request (MIPR). DD Form 448 may be used to order items on schedule when customers have a special project or for high dollar items. This form may be used to order a multitude of items on one or more contracts and just attach a bill of material(s).

4. MILSTRIP. The Form DD 1348-6 may also be used to submit exception data requisitions. Descriptive data is required when ordering non-NSN listed items, such as those on Multiple Award Schedule, and when a specific color or material is required. When submitting non-NSN listed orders, be certain to cite all the data required to purchase the item, such as name, part number, size, color, vendor, contract number, etc.

D. Ordering and Receipt of Paints. Most vessels and shore units maintain paint lockers and keep an allowance of paint on hand. These allowances are necessarily kept low because paint will deteriorate in the container. Prior to a scheduled painting, obtain larger paint stocks as necessary to meet the projected demand.

1. To prevent costly waste of paints due to age deterioration, always use the oldest paints first. Reference to the shelf-life extension program is encouraged to minimize wastes.

2. When ordering paints and related supplies, always request the Material Safety Data Sheet (MSDS). The MSDS provides valuable information about the proper handling of a product. The Emergency Planning and Community Right-To-Know Act (EPCRA) and Pollution Prevention (PL), COMDTINST M16455.10 (series), requires that MSDS's be obtained prior to purchasing a hazardous material. Coatings with hazardous toxic materials should be eliminated as acceptable substitutes with less toxicity are made available.

3. To estimate the amount of paint needed for a particular job:

   a. Use table 4-1 to determine coverage of a flat surface in square feet per gallon. Table 4-1 takes into account the type of paint (some paints leave thicker films than others) and the material being covered (variable material absorption rates).

   b. Multiply the figure from table 4-1 by the appropriate surface irregularity factor from table 4-2. The resulting coverage figure should be a reasonable estimate of the surface area that a gallon of paint will cover.

Downloaded from http://www.everyspec.com

TABLE 4-1

Coverage in Sq. Ft. Per Gallon on a Flat Surface

Surface and Material	1st or Primer Coat	2nd Coat	3rd Coat
Siding and Trim Exterior Oil Paint	350	400	450
Porch Floors and Steps Deck Paint	300	400	450
Asbestos Wall Shingles Exterior Paint	150	300	
Shingle Siding Exterior Oil Paint	250	300	
Shingle Roofs Roof Paint	100	200	
Brick Exterior Oil Paint	150	300	
Interior Doors and Windows Interior Gloss Enamel	350	400	450
Walls, Smooth Finish, Plaster Interior Gloss or Semi-Gloss Oil Paint	350	400	450
Interior Latex Paint	450	500	
Plasterboard (Sheetrock)			
Interior Gloss or Semi-Gloss Oil Paint	400	450	
Interior Latex Paint	450	500	
Metal			
High Build Epoxy (5 mils)	165	165	
High Solids and Edge Retentive Epoxies	320	80	
Exterior Enamel	350		

TABLE 4-2

Surface	Irregularity Factor
Vessel Overheads	1.50
Bulkheads	1.70
Building Ceilings	1.90
Walls	1.80

4. All paint products that are received should be delivered in original, unopened containers with the following information:
   - Product Name/No.
   - Manufacturer
   - Batch No.
   - Date of Manufacture
   - Shelf Life
   - Product Data/ASTM F718 Sheet
   - Material Safety Data Sheet (MSDS)
   - Certificate of Compliance (COC)

E. Organizing for the Job. Careful organization is necessary to ensure safety, efficiency, and quality. Accordingly, the following guidelines are recommended:

Downloaded from http://www.everyspec.com

1. Apply Operational Risk Management principles, in accordance with Operational Risk Management, COMDTINST 3500.3 (series), to manage Occupational Safety and Health risks. Contact the cognizant MLC (kse) for assistance.

2. Use only experienced personnel as supervisors. This is especially important in the operation of specialized equipment and in the use of highly toxic materials. Supervisors must have a thorough knowledge of painting procedures, maintenance procedures, operation and maintenance of equipment, and safety precautions. All jobs must be checked frequently to ensure personnel are preparing surfaces properly, paints are used properly with regard to mixing and conditioning, application is uniform and at proper film thickness, and proper drying time is allowed between coats. Supervisors are responsible for recording work progress, gallons used, and for daily project and job acceptance inspection reports. Supervisors are responsible for proper identification and disposal of any hazardous wastes resulting from the job.

3. Maintain a clean, well-ventilated paint mixing room and paint locker.

4. Develop a full knowledge of various surfaces and how to prepare them for painting.

5. Consider weather conditions and avoid painting when conditions are unfavorable.

6. A Coatings Preservation QA Checklist found in Table 4-3 provides some general guidelines for inspecting the surface preparation and application of a coating.

F. Paint Records.

1. Maintenance of paint records is essential for evaluating the performance of coating systems. It allows for performance versus time comparisons, thus distinguishing high performance systems from substandard ones. Aboard ship this information is entered in the Hull History as required by the Naval Engineering Manual, COMDTINST M9000.6 (series). For small boats, this information should be kept in the boat record. At shore establishments, a Painting Log should be maintained. These records should have separate pages for each compartment or room and for the exterior of superstructures or buildings. The following information should be recorded whenever complete repainting is done:

   a. Date of application.

   b. Area painted.

   c. Name of each finish material used, number of coats, specification number, name of manufacturer, date of manufacture, and manufacturer's lot number.

   d. Number of gallons of each type paint used.

   e. Temperature.

   f. Dewpoint.

   g. General statement of weather conditions.

   h. Dry Film Thickness

2. A Coatings Preservation QA Checklist found in Table 4-3 provides some general guidelines for inspecting the surface preparation and application of a coating.

3. In addition to recording the above information, the date of application may be stenciled on the painted area in an inconspicuous location. This practice will aid in evaluating coating system performance versus time. A stenciled

Downloaded from http://www.everyspec.com

date may also prevent unnecessary repainting. Finally, the stencil serves as a crosscheck with the Hull History or Painting Log.

G. Contract Painting.

1. When painting is done under contract, specifications must be written to guard against inferior workmanship, materials, and other detrimental factors that may shorten the service life of the paint film.

2. Painting specifications should prescribe weather conditions suitable for painting, surface preparation, the painting systems to be used, paint materials to be used, methods of application, equality of the finished job and the general condition of the premises upon completion.

3. Repair and construction contracts may specify contractor-furnished paint only when the agreement specifies painting by the contractor. Contracts normally require submittals for key materials that demonstrate that those materials conform to contract requirements.

4. Monitoring of preparation and paint application by a Coast Guard inspector is equally important as final inspection. In process monitoring shall supplement final inspection. The completed paint job shall be inspected by a Coast Guard inspector prior to acceptance.

5. Safety requirements contained in this Manual and those specified by the Safety and Occupational Health Manual COMDTINST M5100.47 (series) shall apply to contract painting when Coast Guard personnel health is at risk.

6. Painting specifications shall require contractors to manage and dispose of all hazardous wastes resulting from their operations in accordance with all applicable federal, state, and local requirements.

H. Reports of Deficient Paint. Units receiving defective paint shall refer to the Supply Policy and Procedures Manual (SPPM), COMDTINST M4400.19 (series); Reporting Quality Deficiencies Involving Items, Enclosure 5.4.

Downloaded from http://www.everyspec.com

TABLE 4-3 COATINGS PRESERVATION QA CHECKLIST

CHECKPOINT 1 - COATING SYSTEM COMPLIANCE

_____ Ensure all coatings are in compliance with Coatings and Color Manual Appendix C.

CHECKPOINT 2 - PAINT STORAGE

_____ Ensure all coatings are maintained at a temperature of 65 to 85°F at all times.

CHECKPOINT 3 - AMBIENT CONDITIONS

_____ Ensure surface and surrounding temperatures are each between 50 and 90°F for water-based coatings, and 35 and 95°F for other coatings, unless the manufacturer specifies otherwise.

_____ Ensure that relative humidity (RH) does not exceed 50% for tanks, voids and vent plenum or 85% for all other areas (except surfaces being coated with Euronavy ES301, that has an acceptable RH range of 10-100%) from surface preparations through final curing of topcoat.

CHECKPOINT 4 - PRE-SURFACE PREPARATION

_____ Prior to surface preparation, remove surface contaminants (soluble salts, loose rust, mud and marine growth) with 3000 psi minimum fresh water wash down. If oil/grease are present, perform solvent cleaning per SSPC SP-1.

CHECKPOINT 5 - SURFACE PREPARATION

_____ Verify environmental conditions (see CHECKPOINT 3).

_____ Ensure cleanliness of prepared surface is as per specification (i.e. SSPC SP-12, SP-11, SP-10…).

_____ Check surface anchor profile.

_____ Check soluble salt conductivity (5 measurements per 1000 sq ft) and ensure levels are at or below 70 microsiemens/cm for non-immersed applications, and 30 microsiemens/cm for immersed applications.

CHECKPOINT 6 - PRIMER COAT APPLICATION

_____ Verify environmental conditions (see CHECKPOINT 3).

_____ Verify proper mixing and stand-in (induction) times.

_____ Ensure no paint is applied when the temp. is expected to drop to freezing before the paint has dried.

_____ Ensure surfaces are completely dry and surface temperature is at least 5°F above the dew point (Euronavy ES301 may be applied over damp surfaces).

_____ Verify wet film thickness at random, to prevent under or over application.

_____ Brush out all runs, sags, drips and puddles.

_____ Perform visual inspection for holidays and other defects.

_____ Verify dry film thickness.

CHECKPOINT 7 - STRIPE COAT APPLICATION

_____ Verify environmental conditions (see CHECKPOINT 3).

_____ Ensure overcoating window is as per manufacturer's instructions.

_____ Brush-apply un-thinned coat of same primer paint over edges, weld seams, cut-outs, and areas of complex geometries at 3-4 mils wet film thickness (WFT).

CHECKPOINT 8 - TOP COAT APPLICATION

_____ Verify environmental conditions (see CHECKPOINT 3).

_____ Ensure overcoating window is as per manufacturer's instructions.

_____ Verify proper mixing and stand-in (induction) times.

_____ Verify wet film thickness at random, to prevent under or over application.

_____ Brush out all runs, sags, drips and puddles.

CHECKPOINT 9 - FINAL INSPECTION

_____ Verify final system dry film thickness.

_____ Verify system cure for service resumption (i.e., u/w body surfaces: 5-8 hours at 77°F or potable water tanks: 7 days at 77°F.)

CHECKPOINT 10 - RECORD KEEPING

_____ Complete, sign and submit all QA Inspection Forms.

Downloaded from http://www.everyspec.com

CHAPTER 5. PREPARATION OF SURFACES

A. General. Proper preparation of surfaces prior to painting is essential to achieve maximum coating life. Even the best quality paint will not perform effectively if applied on a poorly prepared surface. The initial cost of adequate surface preparation is more than compensated for by increased durability, minimum repairs, and reduced paint application frequency. The selection of surface preparation systems is typically dependent upon the type and condition of surface to be painted and practical limitations such as time considerations, type of paint to be applied, and safety factors. Many surface contaminates reduce adhesion and cause blistering, peeling, flaking, and under-film rusting. Among these are chemicals, moisture, and efflorescence (atmospheric salt residues). In addition, the following surface defects will result in poor adhesion: irregular weld areas, metal burrs, crevices, sharp edges, weld splatter and flux knots, splinters, nail holes, loose aggregates, and old paints in various stages of failure. Because of their importance, methods of preparing iron and steel are given particular emphasis in this chapter. In addition to specific requirements and guidance, references are also made to specifications and visual standards issued by The Society for Protective Coatings (formerly the Steel Structures Painting Council which has retained the acronym SSPC) and NACE International (formerly the National Association of Corrosion Engineers). For information on obtaining SSPC specifications see Appendix C of this manual.

B. Health and Environmental Considerations. Prior to conducting surface preparation, review Chapter 2 for safety precautions and review Chapter 3 for environmental regulations (including 3.C, 3.E.2 and 3.F). Prior to conducting any surface preparation, determine if any work will involve lead based paint (LBP) or asbestos. If so, consult 3.C.1 and 3.C.2 as well as Chapter 2.

C. Surface Cleanliness and Contaminant Removal. Cleanliness of the surface is a critical factor in the performance of a coating system. Contaminants such as oil, grease, soil, drawing and cutting compounds, and soluble salts contribute to coating failures and must be removed from the surface. The presence of oil and grease impairs coating adhesion. Soluble salt contaminants such as sodium chloride can cause premature coating failure by inducing corrosion under the coating film and blistering of the coating. Although it is often thought that abrasive blast cleaning removes these contaminants, often the result is that the contaminants are actually spread across the surface.

1. Solvent Cleaning. Solvent cleaning removes oil and grease by the use of organic solvents, emulsion or alkaline cleaners, or steam cleaning. Regardless of cleaning agent, first remove any heavy deposits of oil or grease with a scraper. The most common methods of solvent cleaning involve wiping, scrubbing, or spraying the surface with an organic solvent, for example mineral spirits or super high-flash naphtha. Ensure that the cleaning medium and any materials such as rags or brushes are changed frequently to avoid further spread of contaminants. See Solvent Cleaning (SSPC-SP 1).

2. Removal of Soluble Salts. Most of the cleaning methods found in Solvent Cleaning (SSPC-SP 1), particularly those involving the use of organic solvents, do not adequately remove soluble salts that are contaminants on the surface. The best way to remove them is to dissolve them in water. Thorough rinsing with fresh water may be sufficient; however, low pressure water washing (less than 5000 psi) is more effective, especially when there is pitting of the surface. It is recommended that conductivity measurements be taken for immersed applications, such as tanks and bilges, and shall not exceed 30 microsiemens/cm. It is recommended that conductivity measurement be taken for non-immersed applications, and shall not exceed 70 microsiemens/cm. Five measurements should be taken every 1,000 square feet. Areas less than 1,000 square feet should have five measurements taken. Surface conductivity checks should be accomplished using available field or laboratory test equipment on the freshly prepared surface. Samples can be collected using the Soluble Salt Conductivity Measurement According to Bresle Method or other equivalent methods. If conductivity measurements exceed the respective values, water wash the affected areas with fresh water. Dry the affected areas and remove all standing water. Accomplish surface conductivity checks on affected areas. Repeat step until satisfactory levels are obtained.

Downloaded from http://www.everyspec.com

D. Surface Preparation Methods.

1. Hand Tool Cleaning. Hand tool cleaning will remove only loose or loosely adhering surface contaminants. These include rust scale, loose rust, mill scale, and loosely adhering paint. Hand tool cleaning is not an appropriate procedure for removing tight mill scale or all traces of rust. It is primarily recommended for spot cleaning in areas where corrosion is not a serious factor. In extreme situations, as when areas are not accessible to power tools, hand cleaning may have to be used by necessity. Because hand tool cleaning may remove only the loosest contamination, use primers that thoroughly wet the surface. All applied coats must be capable of overcoming the interference of contaminants left behind after hand cleaning to achieve satisfactory adhesion, assuring maximum anticipated coating life under normal conditions. Before hand tool cleaning, the surface must be free of oil, grease, dirt, and chemicals. This can best be accomplished with solvent cleaners. Then remove rust scale and heavy buildup of old coatings with impact tools such as chipping hammers, chisels, and scalers. Remove loose mill scale and non-adhering paint with wire brushes and scrapers. Finish up by sanding, especially on woodwork. Avoid gouging and deep scratching of the surface. Start painting as soon as possible after cleaning. See Hand Tool Cleaning (SSPC-SP 2).

2. Power Tool Cleaning. Power tool cleaning methods provide faster and more adequate surface preparation than hand tool methods. Power tools are used for removing small amounts of tightly adhering contaminants which hand tools cannot remove. However, they remain uneconomical and time consuming in comparison to blasting for large area removal of tight mill scale, rust, or old coatings. Power tools are driven either electrically or pneumatically and include a variety of attachments. Pneumatic tools are preferred for use on board ship and around water to avoid electric shock. Chipping hammers are used for removing tight rust, mill scale, and heavy paint coats. Rotary and needle scalers are used for removing rust, mill scale, and oil paint from large metallic and masonry areas. Wire brushes (cup or radial) are used for removing loose mill scale, old paint, weld flux, slag, and dirt deposits. Grinders and sanders are used for complete removal of old paint, rust, or mill scale on small surfaces and for smoothing rough surfaces. As with hand tools, care must be exercised with power impact and grinding tools not to cut too deeply into the surface. Care must also be taken when using wire brushes to avoid glazing metal surfaces and thus prevent adequate adhesion of the subsequent coatings. As environmental regulations have tightened, power tool manufacturers have responded by developing vacuum attachments and tools with integral vacuum ports to reduce dust and collect debris as it is removed from the substrate. Use of these tools is encouraged to minimize health hazards and prevent paint dust and chips from escaping to the air and water (See also Chapter 3, Environmental Laws and Policy). Painting must be started and completed as soon after cleaning as possible. See Power Tool Cleaning (SSPC-SP 3) and Power Tool Cleaning to Bare Metal (SSPC-SP 11).

3. Abrasive Blast Cleaning. Blast cleaning abrades and cleans through the high velocity impact of metal shot, metal or synthetic grit, or other abrasive particles on the surface. Abrasive blasting is most often used on metal structures but may also be used with caution on masonry substrates. It is by far the most thorough of all mechanical treatments. There are four degrees of blast cleaning recognized by the SSPC and NACE. Approximate cleaning rates are shown in Table 5-1.

TABLE 5-1: Rate of Cleaning
(Approximate cleaning rates using 100 psi with a 5/16 in. nozzle)

Degree of Blast Cleaning	Area rate, ft^2/hour
SP5 White metal	100
SP10 Near-white	175
SP6 Commercial	370
SP7 Brush-off	870

a. White Metal Blast Cleaning. (SSPC-SP 5/NACE 1) Blast cleaning to white metal is the highest level of blast cleaning. It is used for coatings that must withstand exposure to very corrosive atmospheres

Downloaded from http://www.everyspec.com

where a high cost of surface preparation is considered to be warranted. Blast cleaning to white metal removes all rust, mill scale, and other contaminants from the surface. This will assist in maximum paint system performance but is generally uneconomical for all but the most critical applications.

b. Near-White Blast Cleaning. (SSPC-SP 10/NACE 2) In this procedure the blasted surface will show shadows, streaks and/or discolorations but they will appear across the general surface area and not be concentrated in spots. Thus, the evaluation of the completed cleaning job must be a visual judgment. This preparation affects a 10 percent to 35 percent savings over white metal blasting and has proven to be satisfactory for many of the special coatings developed for long-term protection in moderately severe environments, including those specified in this manual for vessels.

c. Commercial Blast Cleaning. (SSPC-SP 6/NACE 3) Commercial blast describes the removal of all loose scale, rust, and other surface contaminants. This method of surface preparation will result in a high degree of cleaning, and is generally considered adequate for the majority of paint systems under normal exposure conditions.

Note: The SSPC/NACE standards were written as general standards that apply to dry deserts, cities, as well as the marine environment. For the marine environment, near-white blast cleaning is the most common recommended level of surface preparation.

d. Brush-Off Blasting Cleaning. (SSPC-SP 7/NACE 4) This is a relatively low cost method of cleaning to remove old finishes in poor condition, loose rust and loose mill scale. Brush-off blasting is not intended for use where severe corrosion is prevalent, but to supplant hand tool and power tool cleaning where blast-cleaning equipment is available.

4. Abrasive Blast Cleaning Procedures. Blast cleaning involves the high velocity impact of abrasive particles on the surface. The abrasive is discharged, either wet or dry, under pressure. The wet system differs from the dry in that water, or a solution of water and rust inhibitor, is incorporated with the blast abrasive. The water is either mixed with the abrasive in the pressure tank or is introduced into the blast stream just behind or at the blast nozzle. All blasted metal surfaces require prime painting the same day to prevent new rust from forming. Metal or synthetic shot, grit, or similar abrasives are used where recovery of the abrasive is possible. The grit must be of a size sufficient to remove surface contamination without working the surface to excess. Overworking creates extreme peaks and valleys (anchor pattern) on the surface which require an additional buildup of the applied paint film for adequate protection. The peaks, if too high, can rust and cause premature paint failure because they stick up through the paint film (see table 5-2). Abrasive blasting equipment should be selected to ensure hoses, fittings, nozzles, compressors etc. are sized correctly for efficient operation. Review Chapter 3 for environmental considerations when conducting abrasive blasting, including 3.C.3 and 3.E.2. Also, review 3.F for proper disposal procedures since abrasive blasting may generate hazardous waste.

a. Conventional Dry Blasting. Conventional blast cleaning is a term used to designate the usual method of field blasting, in which no effort is made to alleviate the dust hazard or reclaim the blast abrasive. This procedure precludes the need for special rinsing, as required for wet blasting, but requires that health precautions be taken to protect the operator and other personnel in the area from the fine, abrasive dust. Machinery in the vicinity must also be shielded. After blasting, the surface must be brushed, vacuumed, or air cleaned to remove residues or trapped grit. This form of blasting is prohibited in many locations and should be avoided.

b. Dry Vacuum Blasting. Vacuum blasting is a method which minimizes the dust hazard and in which the blast abrasive is reclaimed. This procedure, also known as dry honing, prevents most dust from escaping; thus, precludes most air emissions. The vacuum method of blasting is less efficient than conventional blasting methods on highly irregular surfaces because of the poor vacuum on such surfaces. However, vacuum blasting may be efficient and economical for cleaning repetitive, small-scale surfaces

Downloaded from http://www.everyspec.com

in a shop. The process results in considerable savings in abrasive costs. By decreasing the dust, dry blasting also reduces health hazards and environmental impacts.

TABLE 5-2: Effect of Abrasive

Abrasive Type Profile	Mesh Size	Max. Profile Height (mils)	Avg. Max Height (mils)
Steel Shot S-230	20	2.9 ± 0.2	2.2 ± 0.3
Steel Shot S-280	18	3.5 ± 0.3	2.5 ± 0.4
Steel Shot S-330	16	3.8 ± 0.4	2.8 ± 0.5
Steel Shot S-390	14	4.6 ± 0.5	3.5 ± 0.7
Steel Shot G-50	30	2.2 ± 0.3	1.6 ± 0.3
Steel Shot G-40	20	3.4 ± 0.4	2.4 ± 0.5
Steel Shot G-25	16	4.6 ± 0.5	3.1 ± 0.7
Steel Shot G-14	12	4.6 ± 0.5	3.1 ± 0.7
Heavy Mineral Sand; Medium-Fine	3.5 ± 0.4	2.6 ± 0.4	
Flint Shot; Medium-Fine	3.5 ± 0.4	2.7 ± 0.4	
Silica Sand *	4.0 ± 0.5	2.9 ± 0.4	
Boiler Slag; Medium	4.6 ± 0.5	3.1 ± 0.5	
Boiler Slag; Medium	6.0 ± 0.7	3.7 ± 0.7	

Note: * See health hazards associated with silica sand abrasive blasting in Chapter 2 - Safety and Occupational Health.

c. Wet Blasting. This method reduces the dust associated with blasting to a minimum, and can be very effective on wood, transit, concrete, and masonry structures. However, wet blasting may not be suitable for all types of work. Steel structures containing a large number of ledges formed by upturned angles and horizontal girders, present a large amount of troublesome cleanup. Wet sand and other blast residues trapped on these ledges are more difficult to remove than dry materials. Also, a sufficient amount of sludge adheres to wet-blasted surfaces requiring removal by rinsing, brushing, or compressed air. Moreover, there is a tendency for the wet-blasted surface to rust even though inhibitor is present in the mixing and rinsing water. Other issues of concern include, but are not limited to: 1) The blasted surface must be thoroughly dry before coatings are applied. 2) Productivity in area coverage rate may be reduced in wet blasting. 3) Residues may be a hazardous waste (see Chapter 3.F.).

5. Water Jetting. The preparation standard, Surface Preparation and Cleaning of Steel and Other Hard Materials by High- and Ultrahigh-Pressure Water Jetting prior to Recoating (SSPC-SP 12/NACE 5), applies to water jetting. It is a relatively new technique of surface preparation that is considered to be more environmentally sound than abrasive blasting. Water jetting is also known as hydroblasting.

a. The water pressures used determine the work accomplished by water jetting. High-pressure water jetting (10,000 to 25,000 psi) is used to remove loose paint, loose rust, and mill scale. High pressure water jetting may not completely remove tightly adherent epoxy paints. Ultra high-pressure water jetting (greater than 25,000 psi) will completely remove paints from surfaces. The use of water at pressures less than 10,000 psi is referred to as water cleaning.

b. Water jetting does not produce an anchor profile on a metal substrate since it does not remove any of the metal. A metal surface that had a 3 mil surface profile when previously coated, will still have a 3-mil surface profile after water jetting unless there has been metal loss due to corrosion or mechanical damage. Water jetting is generally appropriate only for recoating operations where the proper anchor profile already exists. If a surface is found to not have the proper anchor profile after water jetting, the proper anchor profile will have to be established before applying the coating system. This also applies

Downloaded from http://www.everyspec.com

to surfaces that have been corroded or mechanically damaged. This is typically done by abrasive blasting.

c. An abrasive can be introduced in the water jet stream to establish a profile, however the SSPC-SP 12/NACE 5 standard covers the use of water only operations. Even if an abrasive is used with the water jet stream, the water-jetted surface may have to be followed by an abrasive blast to provide the desired surface profile in areas that have been corroded or mechanically damaged.

d. After waterjetting, the surface should be dry before applying the coating. Flash rusting is almost inevitable. The acceptable level of flash rusting and surface contaminants are defined by SSPC-SP 12/NACE 5.

6. Summary.

a. Contaminant Removal. Surface cleanliness prior to the start of any surface preparation method and any coating operation is critical. Oil, grease, soil, drawing and cutting compounds, and soluble salts are all contaminants that will degrade the performance of the coating system. Loss of adhesion, underfilm corrosion, and blistering can occur as a result of leaving contaminants on the surface.

b. Principal Surface Preparation Methods. The principal surface preparation methods can be classified into five categories according to their increasing order of effectiveness:

(1) Nominal cleaning. This method uses hand or power tools where the corrosive environment is mild to normal and coatings used will satisfactorily adhere to tight residues normally remaining on surfaces after cleaning.

(2) Brush-off blasting. This method promotes extension of the life of coatings when the severity of the environment increases.

(3) Commercial blast. This level of preparation is appropriate for moderately corrosive atmospheres including immersion in water and exposure to industrial or marine environments.

(4) White metal or near-white blasting. This optimum cleaning procedure, including white metal or near-white blasting of ferrous metal, is appropriate for surfaces exposed to or in direct contact with strong chemicals, where any degree of rust formation on the surface would be intolerable, or the best possible preparation procedures are otherwise required.

(5) Waterjetting. This method is an environmentally sound method of preparation for surfaces that have been previously coated.

c. Visual Standards. Previous descriptions of surface preparation, although seemingly precise in written terminology, have led to misunderstanding and disagreement in interpretation regarding what constitutes an acceptable surface. The SSPC has developed several pictorial standards to define the degree of surface preparation. The Guide and Reference Photographs for Steel Surfaces Prepared by Dry Abrasive Blast (SSPC-VIS) is a series of color prints that covers Brush-Off Blast Cleaning (SSPC-SP 7), Commercial Blast Cleaning (SSPC-SP 6), Near-White Metal Blast Cleaning (SSPC-SP 10), and White Metal Blast Cleaning (SSPC-SP 5) with four rust grades of hot-rolled steel. The Guide And Reference Photographs For Steel Surfaces Prepared By Wet Abrasive Blast Cleaning covers wet abrasive blast cleaning to Commercial Blast Cleaning (SSPC-SP 6) and Near – White Metal Blast Cleaning (SSPC-SP 10).The Visual Standard for Power- and Hand-Tool Cleaned Steel (SSPC-VIS 3) covers Hand Tool Cleaning (SSPC-SP 2), Power Tool Cleaning (SSPC-SP 3), and Power Tool Cleaning to Bare Metal (SSPC-SP 11). The Guide and Reference Photographs for Steel Surfaces Prepared By Water jetting (SSPC-VIS 4/NACE No. 7) covers Surface Preparation and Cleaning of Metals by Water jetting Prior to Recoating (SSPC-SP 12/NACE 5). It is recommended that the

Downloaded from http://www.everyspec.com

SSPC Visual Standards be used in conjunction with The Society for Protective Coatings Surface Preparation Specifications in the writing of construction and repair contracts.

d. Alternative Preparation Methods. Although not yet considered common practice, a number of other surface preparation methods are available including chemical stripping and alternative blast media (sponge, carbon dioxide, dry ice, ice, plastic, etc.). These alternative systems should be considered on a case by case basis and include attention to economic, productivity, environmental and occupational health concerns.

e. Environmental Considerations. Blast grit shall not be allowed to fall into the water. Units shall recycle abrasive blast grit as appropriate. Abrasive blast grit not recycled shall be disposed of properly, and, if it meets criteria for hazardous waste, as hazardous waste. Refer to Chapter 3 - Environmental Law and Policy for more details. Paint chips, debris and contaminants from water jetting operations shall not be allowed to fall into the water. Depending on the governing federal, state and local laws, it may be necessary to collect and process run off from water jetting operations before it can be released. The paint chips and debris from water jetting operations shall be disposed of properly, and if they meet the criteria, shall be disposed of as hazardous waste. Refer to Chapter 3 - Environmental Law and Policy for more details.

E. Preparation and Repair of Particular Substrates.

1. Preparation of Ungalvanized Steel. Metallic surfaces other than aluminum and galvanized steel are best cleaned by dry blasting methods. This removes all mill scale, rust, oil, foreign matter, and old coatings leaving a chemically clean surface that will ensure best paint performance.

a. Wet blasting shall be used where dry blasting is impracticable. It is particularly well suited to use at bases and depots not having an area remote from docks or shops available for dry blasting.

b. Water jetting may be used to prepare ungalvanized steel surfaces.

c. When the bulk of rust and old paint has been removed by roughing tools, finishing tools shall be used to complete the job. The principal finishing tools include hand wire brushes, electric and pneumatic wire brushes, power driven abrasive wheels, discs, or belts, needle type descalers and sandpaper. The use of finishing tools without prior use of roughing tools usually results in low productivity in terms of area finished per unit time, or in the case of power wire brushing, in poor surface preparation due to "glazing" rather than removing particles of rust and old paint. The hand scraper is used on small jobs where power tools are impractical and on flat surfaces, crevices, and corners. The hand wire brush is a useful tool for light rust and for brushing around welds and in places not accessible to the power wire brush. Sandpaper and sanding discs are used where a particularly smooth, clean surface is desired. Also, where old paint is removed only in spots, the edge of the remaining paint film should be sanded so that it gradually tapers down to the bare metal (feathering) giving a uniform appearance to the new paint film. Steel wool should not be used as a substitute for sandpaper since small steel particles become embedded in the paint and form a source of corrosion. After the operation is completed, brush or vacuum the surface to remove paint chips, dirt, and dust.

2. Preparation of Galvanized Steel.

a. Avoid heavy blast cleaning of galvanized steel. However, it is frequently necessary to lightly blast clean these surfaces to remove corrosion products and roughen the surface to obtain good paint adherence. With adequate care, the galvanized coating will not be removed from the surface during this light cleaning. Immediately after this cleaning, sweep or blow the dust off the surfaces.

b. Chipping hammers shall not be used on galvanized surfaces. Old paint is normally removed by means of a hand scraper and/or hand or power wire brushes if blast-cleaning equipment is not available.

Downloaded from http://www.everyspec.com

3. Preparation of Aluminum.

   a. Light brush blasting or power sanding to provide a 1.5 mil anchor pattern will promote paint adhesion on smooth surfaces. Use garnet or aluminum oxide blasting materials/abrasive paper with no metallic content. Old coatings that firmly adhere shall not be removed. The broken edges of old coatings shall be feathered with fine sandpaper. The aged coating shall be reactivated by solvent wiping prior to repainting. Coatings that are old and defective can be removed with a commercial Paint Remover/Stripper or one conforming to Paint and Lacquer Remover, Solvent Type (Fed Spec TT-R-248). Fed Spec TT-R-248 is an inactive mil-spec, but still available through GSA. Allow the remover to dwell 10-20 minutes until the coating blisters. Use a plastic or wooden scraper to complete the removal without scratching the aluminum. Rinse the entire surface with fresh water followed by solvent wiping.

   b. Abrasive blasting and power sanding are not always practical on thin aluminum surfaces. Corrosion on sheet stock and lightweight aluminum shall be removed with a mild acid etch solution. A proprietary product, such as Turco W.O. #1, or the equivalent, may be used per instructions issued by the manufacturer. If desired, the solution can be prepared in-house by adding 16 fluid ounces of phosphoric acid to approximately 3/4 gallon of water, stirring, and then adding 4 fluid ounces of methyl alcohol and enough water to total 1 gallon. The solution shall be brushed on the aluminum until the pitting and corrosion have dissolved. The surface shall then be thoroughly rinsed with fresh water and solvent wiped prior to painting.

   c. The most effective method for aluminum preparation presuming an anchor pattern was previously established on the substrate is waterjetting combined with a recovery system. This method eliminates loss of substrate material while minimizing environmental impacts. Waterjetting in the absence of a recovery system is not recommended due to potential run-off and subsequent Clean Water Act violation.

   d. Uncoated marine aluminum surfaces are satisfactory due to the formation of a thin, corrosion resistant oxide film that provides a protective coating in a salt-laden atmosphere and in salt water. Do not apply paint or other coatings to uncoated aluminum surfaces, unless evidence of corrosion is observed. Preserve aluminum alloy machinery parts, which may not be marine grade aluminum, according to the manufacturer's instructions. Fresh water washdowns should be performed frequently.

4. Preparation of Fiberglass. Fiberglass materials are usually coated with a gelcoat which is applied in the shop or a conventional coating which is applied in the field. Surface preparation for application of conventional coatings consists of a thorough cleaning and degreasing, followed by a light hand or power tool sanding. The fiberglass should be repaired as follows if there is any damage or degradation.

WARNING

TO ENSURE THE USE OF PROPER PERSONNEL PROTECTIVE EQUIPMENT, PRIOR TO THE MAINTENANCE OR PREPARATION OF EXISTING FIBERGLASS SURFACES OR THE USE OF FIBERGLASS OR FIBERGLASS PRODUCTS, A THOROUGH REVIEW OF ALL MATERIAL SAFETY DATA SHEETS, CHAPTER 2 OF THIS MANUAL, AND COMDTINST M6260.2 (series), TECHNICAL GUIDE: PRACTICES FOR RESPIRATORY PROTECTION IS REQUIRED. THIS ALSO APPLIES WHEN USING RESINS, CATALYSTS OR OTHER PRODUCTS AND MATERIALS ASSOCIATED WITH FIBERGLASS.

   a. Small Grain Like Blisters. If the gelcoat develops small grain like blisters, repair by popping the blisters, washing them out with distilled water, drying out the gelcoat and painting it with 15 mils of chemically resistant Coating Systems for Ship Structures (MIL-PRF-23236). Alternatively, the gel coat can be planed off and dried out before applying the paint.

Downloaded from http://www.everyspec.com

b. Large Intermittent Blisters. Blisters the size of almonds spaced on six inch or one foot centers can be feathered out, washed with distilled water, dried, relaminated with fiberglass and painted with 15 mils of chemically resistant Coating Systems for Ship Structures (MIL-PRF-23236). If blisters are close together on three inch centers and are beginning to delaminate the glass, then the hull should be planed off to solid material, washed with distilled water, dried, relaminated with fiberglass and painted with 15 mils of epoxy.

c. Blister Formation. Blisters form in a chemical reaction between the resin and water drawn in under osmotic pressure. Foreign matter like pieces of grit or dirt which get into the resin while it is being laid up will act as a nucleus for blisters. For this reason, fiberglass hulls should not be sand blasted or ground with pads that release grit into the laminate.

d. Blister Resistant Materials. Polyester resin auto body putty that contains water-soluble materials will almost always blister and should never be used on boats. Always purchase marine grade resins and ask for a product with a blister free service record. When epoxy paint is used to seal the hull try to use a 100% solids chemically resistant Coating Systems for Ship Structures (MIL-PRF-23236) and apply 3 coats to get complete coverage. Blisters form on foreign matter like sand blasting grit molded into the resin. For this reason fiberglass boats should not be sand blasted or sanded with pads which may leave grit in the resin.

e. Other Fiberglass Problems. Exposed cut fiberglass laminate can wick moisture into the structure that can cause long range damage. Holes and cuts should be sealed. For this reason it is prohibited to drill holes in fiberglass without sealing the wall of the hole with at least 1/32-inch of marine polyester or epoxy. This is particularly important when drilling through cabin tops and transoms. Holes in transoms and fiberglass laminates which are stressed must be reinforced with glass reinforced epoxy.

f. Fiberglass Repair Kits. Minor repairs can be made using Glass Reinforced Plastic Laminate Repair Kit (MIL-R-19907). Because of possible differences in resins supplied by different manufacturers, care should be taken to follow the instructions supplied with the kit.

g. Reference Materials. Detailed guidance covering fiberglass repairs is available in commercial reference books, government manuals and training films. Some examples follow.

(1) Technical Publication (TP-2669) - Fiberglass Repairs; A Guide to Fiberglass Repairs on Boats, Cars, Snowmobiles, and Other Structures by Paul S. Patrick that is available on NE-TIMS (Naval Engineering - Technical Information Management System.)

(2) US Navy "Plastics Preventive Maintenance and Repair Manual" (stock no: 0900-LP-641-0190). This is old but still useful and available from Naval Inventory Control Point, 700 Robbins Ave., Philadelphia, PA 19111-5098, # 1-877-418-6824.

5. Preparation of Wood.

a. Wood Preparation - Cutters and Boats.

(1) Plane or sand bare wood surfaces to a smooth surface. Numerous commercial plastic wood fillers and putties are available to fill cracks, holes, and dents. Use a marine-grade product that is recommended by the manufacturer of the finish coat system (synthetic wood finish, spar varnish, or paint) that is being applied. Small holes, dents or cracks may be filled and faired with Plastic Wood Filler (Fed Spec TT-F-340 - canceled, but still available) or commercial equivalent wood filler product.

Downloaded from http://www.everyspec.com

(2) Previously painted wood surfaces will be thoroughly washed and cleaned of all foreign matter with a detergent (do not use an alkaline solution such as lye or trisodium phosphate). Allow the surface to dry before painting.

(3) If the previously applied paint is not sound and adherent, it should be removed. In addition to mechanical methods such as wire brushing, scraping, and sanding, other suitable methods are available.

(a) Paint Remover/Stripper can be used by applying liberally with the work in a horizontal position if possible. Do not disturb the crust that forms on the surface. Allow the remover to dwell 10-20 minutes, until the old coating blisters and lifts off. Complete the removal with a scraper. If necessary to remove the last traces of coating, apply a second coat of remover and rub with steel wool in the direction of the grain. Clean the residual slime with paint thinner before application of the new coating.

(b) Wet abrasive blasting using relatively low pressures effectively removes scaling and peeling paint from exterior wood. However, resulting surface texture may not be suitable for all finishes. If uncertain, try this method on a small test area first.

b. Wood Preparation - Facilities and Structures.

(1) New Wood. All new construction lumber shall be clean, smooth and dry before painting. Sand if necessary to smooth and to remove glossy surface from hardboard. Allow adequate time for the wood to dry out. Sealed-in moisture will cause rot. Paint all wood as soon as possible after sanding or milling. Paint will adhere well to wood which has been exposed and will fail quickly on wood which has oxidized and started to turn gray. Scrape off all knots and resinous areas and seal these areas with a coat of a Ready Mixed Aluminum Paint Fed Spec TT-P-28 (VOC 340 g/L) unless wood is to be oiled or varnished. Purchase a commercial VOC compliant equivalent sealer if required. Allow 16 hours drying time before applying other coatings. Fill small dents and gouges with Plastic Wood Filler, Fed Spec TT-F-340 (canceled, but still available or use a commercial equivalent wood filler product.) Sand and apply primer. Large dents and gouges should be filled with commercial wood putty after priming.

(2) Floors . Wood floors and stair treads that are to receive a natural finish shall be machine sanded to a smooth even surface and swept clean of dust and grit. Large areas of floor are sanded by a large machine using a continuous band of abrasive paper and usually having a vacuum attachment. The edges of the floor (that can't be reached by the large machine) are sanded with a hand held electric edger with abrasive paper discs or vacuum capture corner/edge devices. The corners have to be scraped by hand.

WARNING

ADEQUATE VENTILATION MUST BE PROVIDED WHEN SANDING TO PREVENT AN EXPLOSIVE DUST OR STRIPPING VAPOR ATMOSPHERE. DO NOT STRIP FLOORS WITH PAINT REMOVER. FOR PROPER RESPIRATORY PROTECTION PROCEDURES, REFER TO COMDTINST M6260.2 (series), TECHNICAL GUIDE: PRACTICES FOR RESPIRATORY PROTECTION.

(a) Fill nail or screw holes with Plastic Wood Filler, Fed Spec TT-F-340 (canceled, but still available or use a commercial equivalent wood filler product.). When applying plastic wood, do not strike it off flush with the surface since it shrinks slightly upon drying. Leave a slight lump and sand it down smooth after it has hardened. Remove all dust from the surface and pores of the wood by wiping with a tackcloth. If stain is required, apply the stain to a sample of wood to make sure of the correct depth and color.

Downloaded from http://www.everyspec.com

(b) A filler coat may be needed for open grain wood such as oak. Purchase a commercial VOC compliant grade of filler if required. Apply by brushing across the grain. Allow the filler to "flatten out" which is characterized by a surface drying appearance, then wipe it into the pores with a pad made of burlap or clean rags. Use a circular motion to ensure filling the pores. Clean excess from the surface with a clean rag, wiping across the grain. If filler sets up too hard for easy wiping, moisten the wiping rag with thinner. If the wiping is accomplished too soon, the filler will be pulled from the pores.

(c) If the finish peels off the floor, the underside of the floor is probably exposed to moisture. If there is a crawl space, paint the underside of the floor with a moisture resistant coating. If any earth is exposed under the floor, cover it with tar paper or a 6 mil exterior grade of plastic sheet. Be sure that all walls around crawl spaces have adequate grates to ventilate moisture.

(3) Previously Painted Wood in Good Condition. Painted surfaces which are not chalking, flaking, peeling or cracking should be scrubbed with detergent, rinsed off and allowed to dry for best adhesion. Heavy accumulations of grease and oil can be removed with detergent (do not wash with Trisodium Phosphate or Lye). Always lightly sand gloss and semigloss surfaces to a dull finish before recoating. Mildew accumulation should be washed down with a mixture of water and liquid household bleach, prior to scrubbing. Previously stained surfaces which are to be painted should be sealed with Ready Mixed Aluminum Paint, Fed Spec TT-P-28 (VOC 340 g/L). Purchase a commercial VOC compliant grade of sealer if required.

(4) Previously Painted Wood in Fair Condition. Painted surfaces which are chalking, flaking, peeling or cracking should first be scraped to remove all loose paint. Sand remaining paint and exposed wood to a fresh surface. All gloss and semigloss surfaces should be sanded to a dull finish to ensure good adhesion.

(5) Previously Painted Wood in Poor Condition. Multiple layers of paint in various stages of failure are an unsound substrate and produce an unattractive finished product. Paint in very poor condition should be scraped off and sanded down to a new surface. When sanding or scraping is inadequate, a high pressure water blast may be more effective or the paint may be removed with an alkaline, solvent-free paint remover such as Peel Away I or equal. As a last resort, the paint may be heated with a torch or heat gun and scraped off.

(a) Oil based and water based paints can be removed with solvent free alkaline paint remover. This type of remover usually will not work well on epoxy, polyurethane, vinyl or lacquers. Apply a thick coat with an old brush or spray large areas and allow to stand over night. Scrape off the residue carefully without scarring the wood. A cropped stiff brush will work well on contoured molding. Rinse with water, scrub clean and neutralize with a mild acid. Allow the wood to dry, then sand. Alkaline paint removers will corrode aluminum.

WARNING

PREVENT CONTACT WITH SKIN. WEAR RUBBER OR PLASTIC GLOVES. SOLVENT BASED PAINT REMOVERS LIKE MIL-R-46073 USUALLY CONTAIN SUSPECTED CARCINOGENS LIKE METHYLENE CHLORIDE AND USE IS NOT AUTHORIZED WITHOUT PRIOR APPROVAL OF THE COMMANDING OFFICER. DO NOT USE INDOORS. ENSURE ADEQUATE VENTILATION AND WEAR APPROPRIATE RESPIRATORY PROTECTION. REFER TO COMDTINST M6260.2 (series), TECHNICAL GUIDE: PRACTICES FOR RESPIRATORY PROTECTION.

(b) Paint is removed with a torch or infrared heating gun by heating the paint just enough to cause it to blister and then scraping it off while it is still hot. Do not burn the paint. Keep the torch or

Downloaded from http://www.everyspec.com

heating gun moving. A second worker can follow with scraper. Sand the surface to remove remaining paint and any char after cooling.

WARNING

ALWAYS STATION ONE WORKER WITH A FIRE EXTINGUISHER TO OVERSEE THIS OPERATION. PAINT SHOULD BE BURNED OFF ONLY IN OUTSIDE AREAS BECAUSE GASES ARE TOXIC. APPROVED RESPIRATORS SHALL BE WORN. IF PAINT REMOVAL BY BURNING IS PERMITTED IN A CONTRACT, THE SPECIFICATION SHALL INCLUDE A SPECIFIC DESCRIPTION OF THE METHOD TO BE FOLLOWED. COAST GUARD PERSONNEL SHALL NOT BURN OFF PAINT WITHOUT PRIOR APPROVAL OF THE COMMANDING OFFICER.

(6) Cleanliness. The final step in every surface preparation is dirt removal. Remove all dirt by brushing vacuuming and wiping with a tack cloth.

6. Preparation of Concrete and Masonry.

a. Cleaning masonry surfaces depends upon the type of paint previously applied and the type of paint to be used. Oil paints and acrylic emulsion paints may be applied over old, firmly adhering, non-chalking coatings of oil paint or cement-water paint. Rubber solution paints require the complete removal of old coatings of oil paint; the solvents in rubber solution paints will lift undercoats of oil paint.

b. Where new paint is not compatible with old coatings or where the old coating is flaking and scaling, completely remove the old coating. Use scraping, wire brushing, or abrasive blasting if equipment is available. For safety and occupational health regulations see General Industrial Standards 29 CFR 1910.94.

c. Where new and old paints are compatible and the old coating is in good condition, surface preparation will consist of removing dust, dirt, efflorescence, oil, and grease. Dust and dirt can be removed by wire-brushing. All old paint should be lightly wire-brushed to make the surface uniform. Oil and grease can be effectively removed by washing with paint thinner followed by detergent and a fresh water rinse.

d. After the surface has been thoroughly cleaned, loose mortar between masonry courses can be chipped and picked out and the joint brushed thoroughly to remove all dust and loose particles. Dampen the surface before new mortar is applied to prevent absorption of water from the mixture.

e. Use enough water to make a fairly dry mortar, about the consistency of putty. It should be thoroughly mixed and worked. When filling cracks, use the mortar like caulking material, which is, tamping it to form a complete bond. When the crack has been tightly packed, smooth the surface with a trowel. When pointing up joints in masonry, the mortar may be applied with a trowel and the surface finished conforming to the old mortar.

f. A 1:2 cement/sand mixture is recommended for damp basements or masonry exposed to very moist conditions. A 1:2 mixture represents 1 part Portland cement to 2 parts sand, measured by volume. The proportion to be used will depend entirely upon conditions, a large proportion of cement being necessary in cases where excessive moisture prevails.

g. After the material has hardened, keep the new work wet for several days to increase the strength of the mortar. If work has been done on outside walls, cover them with tarpaulins to protect them from direct exposure to the sun and drying winds.

h. Latex paints and rubber solution paints may be applied on dry or damp masonry. In very hot weather it is advisable to dampen the surface prior to the application of latex paints.

Downloaded from http://www.everyspec.com

i. Conditional surface preparation.

(1) New Concrete and Masonry. New concrete must be allowed to cure for 30 days at a material temperature of 75°F before coating. Lower temperatures require longer aging. Concrete surfaces must be dry before paints are applied. A good check for dryness is to tape all edges of a floor tile to the surface for 48 hours. If moisture shows up on the back side of the tile and on the concrete, the concrete must be dried longer. Moisture migrating into the concrete from another source must be corrected before coating. Remove loose sand, dirt, mortar or paint by abrasive blasting or power tools. Smooth concrete surfaces should be abrasive blasted or acid etched with a 10% to 15% solution of muriatic acid. Use 1 gallon for every 75 square feet of concrete. Scrub with a stiff brush until bubbling stops and rinse with cold water. If the desired surfaces texture has not been reached, repeat the etch. Otherwise, flush with cold water, rinse with a 3% solution of Trisodium phosphate to neutralize the acid, and vacuum dry.

(2) Old or Previously Painted Concrete or Masonry. Remove all loose paint or chalk efflorescence by scraping, wire brushing or sandblasting. Sandblasting is the most efficient method. Remove oil and grease by scrubbing with a solution of trisodium phosphate (SP grade). Repair all cracks and loose mortar with a 1:2 mixture of cement and sand (by volume). Before applying, add just enough water to this mixture to get a consistency of putty. Dampen cracks before filling. Apply filler by using a coarse fiber paint brush, broad knife, or trowel. Smooth the surface carefully, wetting the tool with water if necessary.

(3) Exterior Masonry Walls Below Grade. New masonry walls, below grade, shall normally be waterproofed with a built up membrane of felt and bituminous compounds applied to the outside of the wall. In dry locations where excellent drainage exists, waterproofing can be accomplished instead by applying 2 coats of Acrylic Emulsion Paint,TT-P-19 (250g/l VOC) to the outside of the wall. In older construction excavating buried walls for waterproofing is too expensive. Corrective actions for leaks should include drainage improvements, gutter and downspout repair, and repairs to all cracks and joints.

F. Repair of Surfaces.

1. General. All surfaces must be in good condition before painting. Repair or replace degraded wood, concrete, masonry, stucco, metal, plaster, and wallboard. Remove and replace all loose mortar in brickwork. Replace broken windows and loose putty or glazing compound. Patch all cracks or holes in wood, masonry, and plaster. The final surface should be smooth, with no openings or defects of any kind. These preparatory procedures eliminate the major areas for the entrance of moisture that can lead to blistering and peeling of the paint film.

2. Faying Surfaces. Faying surfaces are the surfaces of similar or dissimilar materials which are fit closely together and fastened. Faying surfaces shall be accomplished in accordance with NSTM Chapter 631. Coat threaded fasteners and parts of aluminum before using with an Antiseize Compound (CID A-A-59313) or Ultra Tef-Gel.

3. Caulking Compounds and Sealants. Caulking compounds are oil or resin based. They are used in fixed joints of wood, metal, or masonry, or in joints with very limited movement. Sealants, on the other hand, are elastomeric, rubber like compounds. They are intended for use in expansion or other movable joints.

4. Putty. Putty is used to fill nail holes, cracks, and imperfections in wood surfaces. It is supplied in bulk form and is applied with a putty knife. Putty is not flexible and should not be used for joints and crevices.

5. Glazing Compound. Glazing compounds are used on both interior and exterior wood and metal window sash either as bedding or face glazing. They are used to cushion glass in metal or wood frames and are not intended to keep or hold the glass in position. Glazing compounds set firmly, but not hard, and have some

Downloaded from http://www.everyspec.com

limited flexibility. They are more flexible than putty. They tend to harden upon exposure with life expectancy estimated to be approximately 10 years if properly applied. Painting over glazing compounds will extend their useful life. Glazing compounds are relatively inexpensive though more costly than putty.

6. Application of Caulking and Glazing Compounds, Putty, and Sealants. All surfaces must be clean and dry to obtain good adhesion. Remove all oil, grease, soot, dirt, loose paint, or old materials. Be sure the crevice openings are large enough to allow an adequate amount of material to be inserted. Prime the substrate when recommended by the manufacturer. If the opening is deep, first insert backup materials such as oakum, foamed plastic or rubber, fiberglass, or fiberboard.

   a. Gun Grade Caulking Compounds and Sealants. When applying gun grade material, move the gun along the crevice while triggering so the compound is extruded directly into the crevice. Move the gun slowly and steadily, so as to push the bead into the crevice rather than pull it away. Allow the compound to overlap rather than pull it away. Allow the compound to overlap the opening slightly for a better seal and to allow sufficient surface area for adhesion. The best position to hold the gun is at a slight angle with the bevel parallel to the work. The compound should be tooled to ensure close contact with the joint surfaces.

   b. Knife Grade Caulking Compounds, Sealants, and Putty. When applying knife grade material or putty, use a putty knife and press firmly into cracks or holes until full. Then smooth with the flat side of the knife by sliding it across the surface. The exposed area should be slightly convex to allow for shrinkage.

   c. Face Glazing. For face glazing, apply a generous quantity of glazing compound into the glazing rabbet, and gently press the glass into the rabbet, leaving a bed of back glazing material of approximately 1/16 inch. Apply glazing points to hold the glass in place. Strip surplus glazing compound at an angle to allow for runoff of condensation. Apply additional glazing compound to the face and tool into place with the aid of a putty knife, applying sufficient pressure to completely fill the void. Tool face glazing approximately 1/16 inch short of sight line to allow paint to overlap onto glass.

   d. Channel Glazing. For bead or channel glazing, apply a generous amount of the compound to the fixed side and the bottom of the channel. Place non-porous resilient spacer shims (such as vinyl floor tile) at points around the perimeter of the channel to position glass and prevent squeezing out of compound (keep spacer shims below edge of channel). Press glass into place until intimate contact with spacer shims is made. Spread compound on removable bead and gently press into place. Insert spacer shims between glass and removable bead (opposite spacer shims on fixed side of the channel) and apply pressure to removable bead until intimate contact with spacer shims is made. Fasten bead in place and strip excess compound. When glazing compound has attained a surface skin, apply paint, slightly overlapping the sight line.

7. Patching Materials. Cracks, holes, and crevices in masonry, plaster, wallboard, and wood are filled with patching material. It is supplied either ready for use or as a dry powder to which water is added before use. There are a variety of types depending on the surface and its conditions.

   a. Patching Plaster. Patching plaster is used for repairing large areas of plaster. It is similar to ordinary plaster except that it hardens quickly. It is supplied as a powder.

   b. Spackle. Spackling compound is used to fill cracks and small holes in plaster and wallboard. It is very easy to work with and sands very well after it hardens. It is supplied both as a paste and as a powder.

   c. Joint Compound. Joint compound is used primarily to seal the joints between wallboards. It can also be used to repair large cracks. It is supplied as a ready mixed paste and as a powder and is used in conjunction with perforated tape that gives it added strength.

Downloaded from http://www.everyspec.com

d. Portland Cement Grout. Portland cement grout is used to repair cracks in concrete and masonry. Hydrated lime is often added to slow cure time and lengthen working life.

e. Plastic Wood. Plastic wood is filler suitable for repair work such as filling gouges and nail holes in wood. It is also used for building up and filling in wood patterns and joiner work. It is applied in a manner similar to putty. Sand plastic wood smooth after it has completely dried and before applying paint.

f. Application of Patching Materials. When using patching materials on masonry, plaster, or wallboard, the crack should first be opened with a putty knife or wall scraper so the weak material is removed and the patching compound can be forced in completely. Dampen these areas with clear water and apply the compound with a putty knife or trowel, depending on the size of the hole. Level and smooth off the surface allowing it to be slightly convex to allow for shrinkage. Follow manufacturer's instructions explicitly if they are available. None of these materials require attention during drying, except for the Portland cement grout which should be kept damp 3 days for optimum cure.

Downloaded from http://www.everyspec.com

CHAPTER 6. PAINT MATERIALS

A. General. This chapter presents information to aid in determining the best product for the job and to explain why the product is best suited for the particular situations (i.e. substrate, painting conditions, desired finish, and the environment to be withstood by the applied finish).

WARNING

MANY OF THE PIGMENTS AND SOLVENTS IN PAINTS REQUIRED BY THIS MANUAL CAN CAUSE SIGNIFICANT HEALTH PROBLEMS. REFER TO CHAPTER 2 AS APPROPRIATE.

B. Paint Chemistry. Most paints are based on a film forming *vehicle* or binder dissolved in a solvent or emulsified in water. Upon application of the product, it will dry or cure to form a dry, tough coating. Solutions of such vehicles in solvent may be called by various names (e.g., clear finishes are called varnishes if they dry by oxidation or lacquers if they dry by evaporation). If opaque pigments or colors are dispersed in the vehicle, the product is called paint. Pigment concentration can also be varied to produce a high gloss, a semi-gloss, or lusterless (flat) finish. Metallic pigments can be added to varnishes to produce metallic coatings, such as aluminum paints. The major performance characteristics of the coating depend generally on the type of vehicle used. The principal vehicles used in the paint materials covered in this manual are listed alphabetically in this section.

1. Alkyd. Alkyd vehicles are oil-modified phthalate resins that dry by reacting with oxygen from the surrounding air. Alkyd finishes are usually of the general-purpose type, are economical, and are available as clear and pigmented coatings. These are available in flat, semi-gloss, and high gloss finishes and in a wide range of colors. They are easy to apply and, with the exception of fresh concrete, masonry, and plaster, may be used on most surfaces that have been moderately cleaned. Alkyd finishes have good color and gloss and retain these characteristics well in normal interior and exterior environments. Their durability is only fair in corrosive environments. Alkyd finishes are available in odorless formulations for use in hospitals, kitchens, sleeping quarters, and other areas where odor during painting might be objectionable.

2. Cement. Portland cement mixed with several ingredients acts as a paint vehicle when reacted with water. The paint is supplied as a powder to which the water is added before use. Cement paints are used on rough surfaces such as concrete, masonry, and stucco. They dry to form hard, flat, porous films that permit water vapor to pass through readily. Since cement paints are powders, they can also be mixed with masonry sand and less water to form filler coats to smooth rough masonry before applying other paints. Cement paints can be used on fresh masonry and are economical. The surface must be damp when they are applied, and must be kept damp for a few days to obtain proper curing. They should not be used in arid areas. When properly cured, cement paints of good quality are quite durable. However, when improperly cured, they chalk excessively on exposure and may present problems in repainting.

3. Epoxy. Epoxy vehicles are made up of two components that are premixed before use: an epoxy resin and a polyamide hardener. When mixed, the two ingredients react to form the final coating. These paints have a limited working or pot life, usually a working day. Anything left at the end of the day must be discarded. Epoxy paints can be used on any surface and can produce a thick film per coat. The cured film has outstanding hardness, adhesion, flexibility, and resistance to abrasion, alkali, and solvents. Major uses are as tile-like glaze coatings for concrete and masonry and for the protection of structural steel and vessel hulls in corrosive environments. Their cost per gallon is high, but is offset by the reduced number of coats required to achieve adequate film thickness. Epoxy paints tend to chalk on exterior exposure so that low gloss levels and fading can be anticipated; otherwise, their durability is excellent.

Downloaded from http://www.everyspec.com

4. Inorganic. The major inorganic vehicles used in paints are sodium, potassium, lithium, and ethyl silicates. These are used in zinc dust pigmented primers in which they react with the finely divided zinc metal to form very hard films. Such films are extremely resistant to corrosion in humid or marine environments. Many of these primers also contain substantial concentrations of lead oxides that react with the silicates in conjunction with the zinc to form an even more corrosion-resistant coating.

5. Latex. Latex paints are based on water emulsions of three basic types of polymers: polyvinyl acetate, polyacrylic, and polystyrene-butadiene. They dry by evaporation of water, followed by coalescence of the polymer particles to form tough, insoluble films. They have little odor, are easy to apply, and dry very rapidly. Interior latex paints are generally used either as a primer or finish coat on interior walls and ceilings. Exterior latex paints are used directly on exterior (including alkaline) masonry or on primed wood. They are nonflammable, economical and have excellent color and color retention. Latex paint films are somewhat porous resulting in a lowered susceptibility to blistering caused by moisture vapor. This blistering is a more significant problem with solvent thinned paints. Latex paints do not adhere readily to chalked, dirty, or glossy surfaces. Therefore, careful surface preparation is required for their use. Latex paints are very durable in normal environments, at least as durable as oil paints.

6. Oil. Linseed oil is the major vehicle in oil house paints. These paints are the oldest type of coatings in use and have the longest history of performance. They are used primarily on exterior wood and metal since they dry too slowly for interior use and are sensitive to alkaline masonry. Oil paints are easy to use and give a thick film per coat. They also wet the surface well so that surface preparation is less critical than with other types of paints for metal. They are recommended for hand cleaned iron and steel. Oil paints are not particularly hard or resistant to abrasion, chemicals, or strong solvents, but are durable in normal environments.

7. Oil-Alkyd. Linseed oil vehicles are often modified with alkyd resins in order to reduce drying time, to improve leveling, hardness, gloss, and gloss retention, and to reduce fading while maintaining brushability, adhesion, and flexibility of the oil. One end use is in trim paints applied to exterior windows and doors. Since these areas are relatively small and painted in solid colors rather than tints, they require better leveling, gloss retention, and fade resistance than the rest of the exterior walls. Also, these areas are subject to some handling and therefore, require faster drying and harder finishes. Oil-alkyd paints are also used on structural steel when faster drying finishes are desired. However, somewhat better surface preparation is required than with oil paints.

8. Oleoresinous. These vehicles are made by processing drying oils with hard resins and are generally used either as spar varnishes or as mixing vehicles to be added to aluminum paste to produce aluminum paints. Alkyd finishes are often called oleoresinous because a drying oil is combined with the alkyd resin. Alkyd finishes are usually preferred where better color retention is desired.

9. Phenolic. Phenolic vehicles are made by processing a drying oil with a phenolic resin and are thus a class of oleoresinous vehicles. They may be used as clear finishes or pigmented in a range of colors. The clear finishes may be used on exterior wood and as mixing vehicles for producing aluminum paints. The durability of the clears is very good for this class of finishes (1 to 2 years); the durability of aluminum paints is excellent. Phenolic paints are used as topcoats on metal for extremely humid environments and as primers for fresh water immersion. These paints require the same degree of surface preparation as alkyds but are slightly higher in cost than alkyds. Phenolic coatings have excellent resistance to abrasion, water, and mild chemical environments. They are not available in white or light tints because of the relatively dark color of the vehicle. Furthermore, phenolics tend to darken from exposure.

10. Phenolic-Alkyd. Phenolic and Alkyd vehicles are often blended to combine the hardness and resistance properties of the phenolics with the color retention of alkyds. This may be done either by blending phenolic resin during processing of the alkyd vehicle or by addition of phenolic resin during processing of the alkyd resin.

Downloaded from http://www.everyspec.com

11. Polyvinyl Butyral Resin/Phosphoric Acid. This coating is designated as a pretreatment and is listed separately because of its unique properties. It is available in a two part system consisting of the PVB resin in part I and a dilute phosphoric acid mix in part II. The phosphoric acid performs a mild etch on a variety of metals which enhances adhesion. The acid salts and PVB resin combine to provide an organic/inorganic 0.5-mil film compatible with most anti-corrosion primers. The pretreatment wash primer is regarded as a chemical process that is applied before the primer and is not a primer substitute. Do not use any pretreatment wash primers containing chromates.

12. Rubber-Base. Rubber-base vehicles are solvent thinned and should not be confused with latex binders which are often called rubber-base emulsions. They are lacquer type products and dry rapidly to form finishes which are highly resistant to water and mild chemicals. Recoating must be done with care to avoid lifting by the strong solvents used. Rubber-base paints are available in a wide range of colors and levels of gloss. They are used for exterior masonry, and areas that are wet, humid, or subject to frequent washing (e.g., swimming pools, wash and shower rooms, kitchens, and laundry rooms). Styrene-butadiene, when combined with chlorinated plasticizers and silicone resins, is used to produce high-heat-resisting ready-mixed aluminum paints.

13. Silicone. Silicone vehicles are used in two ways: for water repellents and for heat resistant finishes.

    a. Water Repellents. Dilute solutions (5 percent solids) of silicone resin are of temporary help in reducing water absorption when applied to unpainted concrete or masonry such as brick or stone. They usually do not affect the color or appearance of the treated surface. Cracks and open joints must be repaired before water repellents are applied.

    b. Heat-Resistant Finishes. Heat-resistant organic finishes containing a high concentration of silicone resins, when pigmented with aluminum, have the ability to withstand temperatures up to 1200°F.

14. Silicone Alkyd. The combination of silicone and alkyd resins results in an expensive but extremely fade-resistant coating for use on smooth metal.

15. Siloxane. Siloxanes, in general, refer to a broad range of resin systems containing the Si-O-Si siloxane bond. This may include silicone, silicate, modified silane and silazane inorganic resin systems as well as hybrid siloxane/organic resin sytems e.g. epoxy siloxane and acrylic siloxane. Siloxane resins may be used to formulate coatings with excellent weatherability, heat and chemical resistance.

16. Urethane.

    a. Oil-Modified Urethanes. These are similar to phenolic varnishes, although more expensive, but have better initial color and color retention, dry more rapidly, are harder, and have better abrasion resistance. They can be used as exterior spar varnishes or as tough floor finishes. Oil modified urethanes can be used on all surfaces. In common with all clear finishes, they have limited exterior durability.

Downloaded from http://www.everyspec.com

WARNING

POLYURETHANES OTHER THAN THE OIL MODIFIED TYPE ARE STRONG SENSITIZERS AND REQUIRE SPECIAL HANDLING PROCEDURES TO PREVENT INJURY. CG PERSONAL SHALL FOLLOW THE SAFETY PRECAUTIONS OF COMDTINST 6260.30 (series), POLYURETHANE COATINGS EXPOSURE CONTROL.

b. Polyurethane Restrictions. Polyurethane coatings that contain isocyanate compounds pose a serious health threat and are therefore prohibited except as required to maintain aircraft or other specific items required elsewhere in this manual such as aids to navigation. This prohibition does not refer to common household paints and varnishes which are called polyurethane but are actually alkyd coatings modified with polyurethane. The alkyd-modified polyurethanes are thinned with mineral spirits paint thinner and do not list isocyanate as a hazard on the MSDS.

c. Moisture-Curing Urethanes. These are the only organic products presently available that cure by reacting with moisture from the air. They are also unique in having the performance and resistance properties of two-component finishes yet are packaged in single containers. Moisture-curing urethanes are used in a manner similar to other one-package coatings except that all containers must be kept full to exclude moisture during storage. If moisture is present in the container, it will gel.

d. Two-Component Urethanes. Urethanes can also be reacted with polyols, polyethers, polyesters, or acrylics to produce extremely hard, resistant and durable coatings. These are vehicles of major interest for use as top coats on structural steel exposed in marine or corrosive environments.

e. Aromatic vs. Aliphatic Urethanes. Urethane polymers can be made from isocyanates that are either aromatic or aliphatic. Aliphatic urethanes are preferred for exterior use, despite their high cost, because of their outstanding durability, color, and gloss retention. Pigmented aromatic urethanes are extremely hard, tough, and chemical resistant, but chalk rapidly when exposed to sunlight.

17. Vinyl. Lacquers based on modified polyvinyl chloride resins are used on steel where the ultimate in durability under abnormal environments is desired. They are moderate in cost but have low solids and require the most extensive degree of surface preparation to secure a firm bond. Because of their low solids, vinyl finishes require numerous coats to achieve adequate dry film thickness resulting in a higher total cost of painting relative to most other paints. Since vinyl coatings are lacquers, they are best applied by spray and dry quickly, even at low temperatures. Recoating must be done with care to avoid lifting by the strong solvents that are present. In addition, these solvents present an odor problem. Vinyls can be used on metal or masonry but are not recommended for use on wood. They have exceptional resistance to water, chemicals, and corrosive environments but are not resistant to strong solvents.

18. Vinyl-Alkyd. The combination of vinyl and alkyd resins offers a compromise between the excellent durability and resistance of the vinyls with the lower cost, higher film build, ease of handling, and adhesion of the alkyds. They can be applied by brush or spray and are widely used on structural steel in marine and moderately severe corrosive environments.

C. Paint Pigments. Pigments are chemical compounds in fine particle form which give color and opacity to paint and to a limited degree determine its consistency and general characteristics. The pigment component of paint may be a single pigment, but generally it is a combination of two or more pigments. Paints with a relatively large proportion of pigment have a flat or semi-gloss finish.

Downloaded from http://www.everyspec.com

1. Extender pigments. Extender pigments are filler materials with little or no opacity. They are used primarily in limited quantities to increase the pigment portion of paints for controlling gloss, diffusing or diluting other colored pigments, retarding, settling, and reinforcing the film.

2. Special Purpose Pigments.

   a. Lead is no longer authorized as an anticorrosive pigment for paints. Special environmental requirements may apply to any activity relating to lead-based paint. Refer to chapter 3.

WARNING

LEAD PIGMENTS, IF INGESTED OR INHALED, WILL ACCUMULATE IN THE BODY AND MAY PRODUCE LEAD POISONING (SEE CHAPTER 2).

   b. Zinc chromate and hexavalent chromium compounds are no longer authorized as anticorrosive pigments for paints except on aircraft.

WARNING

ZINC CHROMATES AND HEXAVALENT CHROMIUM COMPOUNDS ARE POTENTIAL CARCINOGENS. SPECIAL PRECAUTIONS ARE REQUIRED WHEN APPLYING OR REMOVING THESE COATINGS (SEE CHAPTER 2).

   c. Zinc dust paint films are non-toxic. The combination of adherence, corrosion inhibition of steel, and non-toxic qualities is unique and has made zinc dust pigment suitable for use in coatings for the interior of metal potable water tanks.

   d. Aluminum pigments' most important property is their ability to "leaf" when suspended in a properly formulated vehicle of oil or varnish. When aluminum paint is applied, some of the flakes are carried to the surface of the paint film and are held there by surface tension, forming an almost continuous metal leaf at the surface. The remainder of the flakes are distributed throughout the film in more or less parallel layers. Because of this arrangement it is difficult for air, light and moisture to penetrate the film. In order to promote "leafing" brush application should always be in one direction only.

   e. Copper compounds have proven to be the most effective toxic ingredients for use in antifouling paints for both steel and wooden hulls. Cuprous oxide is the least expensive of the compounds and is the principal toxic constituent in many antifouling paints.

D. Use of Solvents and Thinners. Paints should be used as provided, without the use of a solvent or thinner. Solvents and thinners have specific purposes; they should only be used when necessary and in the minimum amount needed. Solvents evaporate when the paint is applied, so the proportion of solvent to solid used in a paint effect the thickness of the film applied per coat. In order to obtain satisfactory dry film thickness, solvents should be used only in such quantities as are required to render the proper consistency for application. Solvents and thinners should not be added to any paint if not needed. Too much thinning of paint reduces its dry film thickness giving shorter life to the paint system. Thinners are comprised nearly entirely of VOCs. Use of thinners should be minimized as they defeat the purpose of using low VOC coatings (See VOC section of Chapter 3). If a solvent or thinner is needed, it should meet the manufacturer's requirements for type and maximum amount for the paint. Some paints specifically state what thinner to use if one is needed. If so, only that specific thinner should be used.

Downloaded from http://www.everyspec.com

This page left intentionally blank.

Downloaded from http://www.everyspec.com

CHAPTER 7. STORAGE, PREPARATION, AND APPLICATION OF PAINT MATERIALS

A. Stowage Areas.

1. Stowage Ashore. Paints shall be stored ashore in accordance the Civil Engineering Manual COMDTINST M11000.11 (series) and the Safety and Occupational Health Manual, COMDTINST M5100.47 (series). Additional storage guidance can be found in the National Fire Code #30 of the National Fire Protection Association, 1 Batterymarch Park, P.O. Box 9101, Quincy, MA 02269, Flammable and Combustible Liquids Chapter 1910.106 in the General Industrial Standards 29 CFR 1910.

2. Storage Aboard Cutters and Boats. Proper hazardous material stowage is essential to cutter and personnel safety. Information on hazardous material stowage may be obtained from Commandant (G-WKS) and MLC (kse). NSTM Chapter 670 provides information concerning stowage requirements for flammable and combustible materials.

B. Paint Distribution.

1. Paint materials. Should be rotated so the oldest stocks are used first. Although all paints deteriorate to some extent in storage, the rate of deterioration depends on several factors and a definitive shelf life cannot normally be specified. Use of the shelf-life extension program is encouraged (See Chapter 3.E.3). However, every effort should be made to use paint within one year of manufacture.

2. Ready for Use. Make all paints ready for use before issue by conditioning at the proper temperature and mixing thoroughly. If the paint issued is from used stock, check condition and strain. If the paint can not be mixed to the point of complete uniformity by shaking or stirring it is not usable and should be discarded. Any issued paint that is not used should be properly stored again or properly disposed. Refer to Chapter 3.F. for disposal guidance as the paint may be considered hazardous waste. If only a small amount of paint is left after a job, consider painting some smaller projects to fully use the issued paint and eliminate the need for storage and future expensive disposal.

C. Containers. Store paint material in full, tightly sealed containers. Avoid partially filled containers. Try to use paint on the job so as to have little or none left over (accuracy in advance estimating will help accomplish this). It is safer to discard small quantities than to use paint that has skinned. Otherwise, place leftover paint in smaller containers, filling them full, and seal. To meet EPA regulations, the content of all containers must be labeled and *readable*. Maintain the MSDS with the new container and copy all information from the original container to the new container as directed the Hazard Communication for Workplace Materials, COMDTINST 6260.21(series).

D. Storage.

1. Storage cabinets. Required for the storage of in-use or working stocks of flammable or combustible paints and thinners, whether in manufacturer sealed containers or in containers which have been opened and resealed.

2. Storage Cabinet Specs. Types that comply with the National Fire Code #30 are commercially available and shall be used for paint storage. These cabinets are constructed in the following manner: The bottom, top, door, and sides of the cabinet are constructed of at least No. 18 gauge steel and are double walled and floored with a 1-1/2 inch air space between inner and outer surfaces. Joints are riveted, welded, or otherwise sealed. The door is secure at three points when latched. The doorsill is raised at least 2 inches above the inner bottom surface of the cabinet. Cabinets should be painted yellow (13538) or as supplied by the manufacturer and shall have the words, FLAMMABLE -- KEEP FIRE AWAY, conspicuously stenciled or painted in a contrasting color such as red or black.

Downloaded from http://www.everyspec.com

3. Maximum Quantity. Sixty (60) gallons of flammable products and one hundred and twenty (120) gallons of combustible products are the maximum quantity allowed to be stored in any one cabinet. Not more than three such cabinets may be placed in any work center or room. Factory sealed stocks in excess of these amounts shall be stored in an outside storage building or specially designed interior room or compartment provided the storage facility is built, protected, and used as required by regulation.

4. Prohibitions. Uncovered containers or containers that cannot be resealed shall not be stored in cabinets or other locations and shall be discarded after use. Refer to Chapter 3.F. for disposal guidance as the containers may be considered hazardous waste. Flammable storage cabinets or other such facilities shall not be used to store rags, oxidizers or materials that could cause spontaneous ignition.

5. Minimization. Stowage aboard vessels should be minimized to only mission essential stock to prevent compounding of personnel and fire hazards. Stowage shall be limited to flammable liquid storerooms with the exception of in-use stock that may be stowed in paint mix rooms. For further guidance, see the Naval Engineering Manual, COMDTINST M9000.6 (series), chapter 670 and Naval Ships' Technical Manual, chapter 670.

E. Paint Conditioning and Mixing. Paints consist of two principal components: the solid pigment and liquid vehicle. The purpose of conditioning and mixing is to re-disperse or re-blend settled pigment with the vehicle, to eliminate lumps, skins, or other detriments to proper application, and to bring the paint materials to their proper application temperature. All paint materials should be placed in the paint shop at least 24 hours before use in order to bring their temperatures between 65°F and 85°F. Paints are then mixed, thinned, tinted, and strained, as appropriate.

1. Mixing. Mix paint materials just prior to issuance. Mixing procedures will vary among different types of paints. Regardless of the procedure used, take care to avoid the incorporation of excess air through over-mixing. Mixing is done by either manual or the more preferred mechanical methods to ensure maximum uniformity. The two most commonly used types of mechanical mixers are those that vibrate the full, sealed container, and those that utilize propellers that are inserted into the paint. Manual mixing is less efficient than mechanical methods in terms of time, effort, and results. Five-gallon containers may be stirred manually, if done with care. To accomplish this, half of the paint is poured off into an empty container and the remainder is then stirred thoroughly, being certain to scrape off and break up any settled matter on the bottom or lower sides of the container. Stirring is continued as the other half of the paint is returned slowly to the original container. The stirred paint must have a completely blended appearance with no evidence of colored swirls at the top, indicating unmixed pigment or vehicle. There should be no evidence of lumps indicating the presence of unmixed solids or foreign matter.

   a. Sequence of Operations. Complete conditioning and mixing of ready mixed paints as well as multi-component paints is mandatory prior to introducing thinners or other additives. Manufacturers' label directions regarding proper mixing shall be strictly followed.

   b. Boxing. Boxing is a mixing procedure where a material is repeatedly poured back and forth between two containers. Because paints tend to settle during storage, ensure they are uniform by boxing all paints before use. If different production batches are used (check batch numbers), compare them for color and gloss after boxing. If any differences are observed, either use them in different areas or box enough for the job using larger containers.

   c. Induction Times. Many multi-component coatings, particularly epoxies (except high solids and edge retentive epoxies), require a period of time after mixing of the components where the critical chemical reaction is allowed to initiate prior to application. This is called the induction time. Many commercial high build epoxies will have induction times of 15 to 30 minutes. High solids and edge retentive epoxies generally do not require any induction time.

Downloaded from http://www.everyspec.com

2. Tinting. Avoid tinting as a general practice. Purchase paints in the desired color to minimize waste and errors in on-the-job tinting. This procedure also eliminates the problem of matching special colors at a later date. One exception is the tinting of intermediate coats to differentiate and ensure there are no missed areas between sequential coats.

3. Straining. Strain paints after mixing if there is any evidence of skins, lumps, color flecks, or foreign materials. First remove skins from the paint surface, thoroughly mix the paint, thin to application viscosity if necessary, then strain through a fine sieve or commercial paint strainer. To avoid clogging, use straining as a standard procedure in all instances where the paint is to be applied by spray gun.

4. Thinning.

   a. Paints should be ready for application by brush or roller when received. While thinning is frequently required for spray application, avoid the arbitrary addition of thinners. When thinning is necessary, it is to be done by experienced personnel using only compatible thinning agents recommended in label or specification instructions.

   b. Paint thinners, other than water, usually have a very high VOC content; thus, adding a thinner to a paint increases the paint's VOC content (transforming a low VOC content paint to a high VOC content paint). Minimize the use of paint thinner. Paint thinners should not be added unless necessary. Paint thinner that is a substance other than water will not be used unless the following condition exists: prior to any paint thinner being added, the paint has a VOC content that is lower than the maximum *as applied VOC content limit*. If this condition exists, then thinner can be added, but only in an amount that ensures that the paint with thinner added is lower than or equal to the maximum *as applied VOC content limit*. See Chapter 3 for VOC content limits. Too much thinning of paint reduces its dry film thickness giving shorter life to the paint system. Use of thinners should be minimized as they defeat the purpose of using low VOC coatings.

   c. Thinning of high solids and edge retentive coatings is prohibited, unless otherwise explicitly directed by the manufacturers instructions.

F. Brush Application.

1. Bristle Types. The quality of the bristle largely determines the quality of the brush. Both natural and synthetic bristles are used for paintbrushes. Brushes with synthetic bristles should have "flag" ends to assure smooth application of paint. Natural bristles are thick at the butt end and taper to the flag or splayed end. Synthetic bristles like nylon are splayed during manufacture.

2. Brush Components. The component parts of a brush are generally as follows:

   a. The handle is made of hardwood or plastic and is shaped to fit the hand for the specific type of work the brush is designed to perform.

   b. The setting of the handle holds the bristles in the proper formation.

   c. The ferrule, which is the connecting link between the handle and the stock (bristles), must be correctly and sturdily constructed so the handle and the stock will not come apart. Ferrules are generally made of steel, nickel, tinplate, or aluminum.

   d. The stock is the working part of the brush and generally contains natural or synthetic bristles.

3. Types of Brushes.

Downloaded from http://www.everyspec.com

a. Disposable Brushes. Use of disposable brushes eliminates the need to use thinners for cleaning purposes and reduces the accumulation of great quantities of paint slop. Disposal costs for paint slops generated from cleaning brushes are exceedingly expensive and the Coast Guard is liable for that waste for an indeterminate period. Whenever disposable brushes offer suitable application quality and are found to be cost effective, their use is preferred.

b. Flat Wall Brushes. Flat brushes have a narrow rectangular cross section. They are available in widths from 2 in. to 5 in. The bristles vary in length according to the width of the brush. The 4-in. brush with 4-1/2 in. bristles is suitable for many kinds of general painting.

c. Oval and Semi-Oval Paint and Varnish Brushes. These brushes are available in 2-1/2 in., 3 in., and 3-1/2 in. sizes and are suitable for general painting and varnishing. The oval brush is mainly for heavy duty finishing work. The semi-oval is used for fine painting and varnishing work. These brushes pick up and retain more paint or varnish than flat type brushes.

d. Flat Varnish and Enameling Brushes. These brushes come in sizes from 1-1/2 in. to 4 in. They provide smooth application of varnish and enamel and are used for a wide variety of purposes.

e. Flat and Angular Sash and Trim Brushes. These brushes are chiseled to provide the particular properties desired for trim and sash work. They come in sizes from 1 in. to 3 in. The angular brush is specifically designed for sash work and is suited for both paint and varnish.

f. Oval Sash Brushes. These brushes are sometimes preferred over the flat sash brushes and they come in sizes from 1/2 in. to 1-3/8 in. They are good for paint application on moderately small surfaces, in corners and pockets, and for other irregular surfaces.

g. Artist's Marking and Lettering Brushes. These brushes are usually made of softer bristles and are used for lettering and extremely fine work. They are available in very small sizes such as 1/16 in. up to 1-1/2 in.

h. Flat Dusting Brushes. This type of brush is for brushing dirt and soot from surfaces to be painted.

4. Brushing Technique.

a. The wrist and arm motions should be free, easy, and not forced. Hold the brush firmly with fingers. In holding the brush, the fingers should not go beyond the metal ferrule onto the bristles.

b. Don't use a flat brush on its narrow edge. This causes the bristles to spread and wears the corners down, spoiling the shape and efficiency of the brush. An oval brush should not be permitted to turn in the hand, but should be held firmly. Rotation of an oval brush causes the bristles to wear into a pointed shape and become useless. Oversized brushes should not be poked or forced into areas too small for them.

c. Before starting to paint, work the paint well into the brush. This is done by holding a mixing paddle across the top of the paint container, dipping the brush into the paint, then wiping the flat sides of the brush clean across the edge of the paddle. Do this several times to ensure filling the brush. Do not wipe the brush across the top edge of the paint can, as its curved surface will distort the shape of the brush.

d. When painting, dip only half the bristles into the paint. Every brush has a certain capacity. Paint will drip and run off around the work if the brush is over-filled, particularly when working overhead.

e. Hold the brush at right angles to the surface being painted with the end of the brush just touching the surface. Lift it clear of the surface before starting the return stroke. If the brush is held obliquely and is not lifted, the finished job will be uneven and it will show lap spots giving a "dabbed" appearance. A

Downloaded from http://www.everyspec.com

brush that is held at too great an angle (obliquely) will wear down at the ends. A properly used brush will wear evenly all around.

f. Since paint films tend to draw thin on corners and edges, coat these areas before applying the overall coat. Apply the overall coat immediately after this preliminary painting and without waiting for it to dry. These preliminary coatings of edges and corners are not counted as regular paint coats.

g. To avoid brush marks when finishing up an area, use strokes directed toward the last area finished, gradually lifting the brush near the end of a stroke while it is still in motion. Every time the brush touches the wet surface at the beginning of a stroke it leaves a mark, so always end up brushing toward the area already painted.

h. Always paint overheads first, then bulkheads, then decks. All drippings should be wiped up immediately. Drops of paint are too thick to dry properly and when painted over become unsightly soft spots in the finished coat.

i. Wait until the first coat is thoroughly dry before applying a second. It cannot dry properly if covered too soon.

j. The paint in the can must be stirred frequently while painting to prevent settling.

k. It is advisable to use brushes with nylon bristles in applying latex paints, as the nylon is resistant to the water and alkalis found in many latex paints.

5. Care of Brushes After Use. Depending on the paint and chemicals involved, it may be more economical to dispose of used brushes capable of being cleaned and reused rather than generate large amounts of paint slops that may qualify as hazardous wastes. Refer to Chapter 3.F. for hazardous waste determination. After weighing the disposal and liability costs involved, if reuse of a brush is determined to be appropriate, always clean the brush immediately after use. Use the thinner described for the paint in which the brush was used. Work the thinner well into the brush. Squeeze out as much thinner as possible, repeat the process two or three times, and rinse in clean thinner. Brushes used for epoxies should be cleaned immediately with special epoxy cleaner.

6. Striping. A craftsman-like job of applying stripes with a brush is easy to accomplish by either of two methods. Both involve the use of masking tape that can be easily removed without damage to the surface.

a. The first method applies to surfaces that are finished and striping is the only painting to be done. Mark the position and width of the stripe and apply masking tape to both sides of the stripe. The striping color is then brushed on. When the paint has set, remove the masking tape.

b. The second method applies to surfaces that are to receive a complete paint job. Mark the position of the stripe and apply the striping color overlapping the boundary marks slightly. After the striped color has dried, apply masking tape to the exact area of the stripe. Apply the finish coat to the entire area. When dry, remove the masking tape to expose the stripe.

c. When removing masking tape from a surface, pull it off somewhat diagonally and back upon itself. Do not pull the tape directly away from the surface at right angles.

G. Roller Application. Rollers constitute another satisfactory method for paint application and offer a great advantage in speed. They cannot be used in small hard-to-get-at areas and on irregular surfaces. Like brushes, use of disposable rollers eliminates the need for use and disposal of the great cumulative quantities of thinners used for cleaning. Whenever disposable rollers offer suitable application quality and are found to be cost effective, their use is preferred.

Downloaded from http://www.everyspec.com

Roller Cover Materials. The cover is the main working part of a roller. There are several types and sizes. The standard size cover (for standard rollers) has a 1-1/2 in. inside diameter. "Nap" is the thickness of the cover and generally a thin nap is used on smooth surfaces and a thick nap is used on rough surfaces. Roller covers are usually available in 3/16 inch to 1-1/4 inch nap thickness. See Table 7-1. All the covers shown in Table 7-1 are applied to cores made of plastic, wood, wire and treated paper tubing. In quality covers, superior types of adhesives are used to bond the core and cover together so they remain intact when cleaned in the most rugged solvents, including lacquer thinners.

1. Mohair: Blends of wool, rayon, and mohair (Angora goat's wool) are considered mohair covers. This type cover is recommended for applying enamels to smooth surfaces.

2. Lamb's Wool: This is one of the original materials employed for roller covers, and is widely used. It maintains its resilience and carries a greater amount of paint than many other fabrics and is recommended in longer nap sizes for painting cyclone-type and other wire fences.

3. Synthetic Covers: Fibers such as Dynel and Dacron are available for covers and can be generally used except for coatings containing alcohols and ketones.

Downloaded from http://www.everyspec.com

TABLE 7-1: Roller Selection Guide

	Type of Surface		
Type of Paint	Smooth	Semi-Smooth	Rough
Aluminum	C	A	A
Enamel or Semigloss (Alkyd)	A or B	A	-
Enamel undercoat	A or B	A	-
Epoxy coatings	B or D	D	D
Exterior House Paint:			
Latex for wood	C	A	-
Latex for masonry	A	A	A
Oil or alkyd - wood	C	A	-
Oil or alkyd - masonry	A	A	A
Floor enamel - all types	A or B	A	-
Interior Wall Paint:			
Alkyd or oil	A	A or D	A
Latex	A	A	A
Masonry sealer	B	A or D	A or D
Metal primers	A	A or D	-
Varnish - all types	A or B	-	-
Roller Cover Key	Nap Length (inches)		
A--Dynel (modified acrylic)	1/4-3/8	3/8-3/4	1-1 1/4
B--Mohair	3/16-1/4	-	-
C--Dacron polyester	1/4-3/8	1/2	-
D--Lamb's Wool	1/4-3/8	1/2-3/4	1-1 1/4

Notes:

Smooth Surface: Hardboard, smooth metal, smooth plaster, drywall, etc.
Semi-Smooth Surface: sand finished plaster and drywall, light stucco, blasted metal, semi-smooth masonry.
Rough Surface: concrete or cinder block, brick, heavy stucco, wire fence.

Comprehensive product standards do not exist in the paint roller industry. Roller covers vary significantly in performance between manufacturers and most manufacturers have more than one quality level in the same generic class. This table is based on field experience with first line products of one manufacturer.

Downloaded from http://www.everyspec.com

H. Spray Painting. Spray painting can save many hours of labor in comparison with brush painting, especially overheads and area with irregular surfaces. Spray painting equipment should be selected and updated to make sure nozzles, guns, lines, compressors, and motors are sized correctly for efficient operation.

1. Environmental Considerations. Spray painting operations require knowledge of and compliance with all federal, state and local requirements relating to the control of air pollution. Prior to starting spray painting operations, painting supervisors shall ensure their procedures comply with the law and obtain all necessary permits (including state and local permits). If possible, conduct spray painting inside a booth or prep station rather than an open bay. If a booth or prep station is used, ensure it is appropriately constructed and ventilated and workers use proper protection. For proper respiratory protection procedures, refer to Technical Guide: Practices for Respiratory Protection, COMDTINST M6260.2 (series).

2. Occupational Safety and Health Considerations. As discussed in Chapter Two, the risks related to atmospheric, health, and explosive hazards from a paint system are increased when application is made by spray painting. The principles of Operational Risk Management (ORM) to manage these risks should be applied before any paint operations begin, particularly so for spray painting operations. Contact the cognizant MLC(kse) for assistance.

3. Types of Spray Equipment. Following are the most common types of spraying equipment that will be encountered:

   a. Conventional Air Spray uses compressed air at pressures between 40 and 70 psi to atomize the paint at the nozzle of the gun and to feed the paint under pressure from the supply tank, pump, or cup to the gun nozzle. This type is the simplest and most versatile of spray systems for coatings with a wide range of viscosities. It normally requires an air temperature of at least 40°F for proper atomization; 70°F is optimum. Although conventional air spray generally produce the best quality finish of all spray methods, the larger amounts of air that are mixed with the coating during application cause a greater coating loss due to bounce-back or overspray. The transfer efficiency, the ratio of the actual coverage of a given amount of paint versus the theoretical coverage, is around 20-50% with conventional air spray. Conventional Hot Spray is a modified form of conventional air spray that uses the same equipment with the addition of a unit that heats the paint. This offers several benefits under certain operational conditions. With most organic paints that become less viscous at elevated temperatures, the hot spray system can apply higher solid content paints. This in turn produces greater film thickness and reduces the number of coats to achieve the desired film thickness. With heated paint, better atomization is accomplished with lower air pressure, and at the same time overspray is reduced. Hot spray also permits painting when atmospheric temperatures are well below the 70°F optimum for conventional spray.

   b. HVLP (High Volume Low Pressure) Spray reduces the overspray problems encountered with conventional air spraying by atomizing the paint with a high volume of air at lower pressures (0.1 to 10 psi). Reducing the air pressure results in reduced bounce-back and increases the transfer efficiency to 55-70%. However, the drawbacks of HVLP spray are lower production rates and use limited to lower viscosity coatings.

   c. Airless Spray is created by forcing paint through a restricted orifice at very high pressure. Atomization of the paint occurs without the use of air jets (as with conventional and hot spray). Liquid pressures in excess of 1500 psi are developed in special high-pressure pumps. With a transfer efficiency of 40-70%, the airless system provides a very rapid means of covering large areas and surfaces with less overspray mist or rebound. The single small diameter hose line makes gun handling easy. Airless spray produces quick film build and is good for dried, absorbent and weathered surfaces.

Downloaded from http://www.everyspec.com

WARNING

HIGH VELOCITY PAINT FROM AIRLESS, INCLUDING PLURAL COMPONENT, SPRAY GUNS CAN PIERCE HUMAN FLESH AND RESULT IN DANGEROUS INFECTIONS.

d. Plural Component Spray has become more common with the increased use of short pot-life/100% solids coatings (generally high solids and edge retentive epoxy paints). Plural Component Spray is similar to Airless Spray in that the paint is atomized by forcing it through a small orifice at high pressure, without the use of air jets. Specialized plural component pumps generate pressures in excess of 5000 psi. The individual components are pumped separately, in a set proportion and mixed at or near the gun rather than being premixed in the pot. This reduces the waste associated with multi-component coating systems. Because the individual components are mixed at or near the gun, this method cannot be used with products that require an induction time. Plural component spray units have higher initial procurement costs and their complexity of use requires more experienced applicators, however, they significantly reduce labor costs (~30%) for application of short pot-life/100% solids coatings paints.

4. Spray Paint Technique.

a. Before starting to spray, all surfaces that are not to be painted must be masked. Large surfaces may be covered with drop cloths or a combination of heavy paper and masking tape. The lapping of masking tape onto bulkheads, when objects such as switch boxes are sprayed, will necessitate touch up by brush.

b. Make sure the spray gun is thoroughly clean. Strain the paint through screen wire or cheese cloth as it is poured into the spray container.

c. For Conventional and High Volume Low Pressure (HVLP), air pressure to the gun should be adjusted to approximately 45 to 50 psi for lacquer and thin liquids and 60 to 70 psi for enamel. Initially, adjust fluid pressure (in a pressure feed gun) to 10 or 15 psi for lacquer and thin liquids and 15 to 20 psi for enamel.

d. Nozzles providing a variety of fan widths are available. Some can be adjusted to vary the fan width while painting. Use gun manufacturers' guidance to select a nozzle that suits the coating material and the areas to be coated.

e. A heavy centered pattern may be due to the spreader adjustment valve set too low, the fluid pressure too high, or the viscosity of the material too great.

f. A split spray pattern may be due to spreader adjustment valve set too high, the fluid pressure too low, or the material being too thin.

NOTE: Adjusting spreader adjustment or fluid pressure will accomplish essentially the same thing: increase the pressure differential between air and fluid pressure. Lowering fluid pressure will decrease the rate of flow of the fluid thereby decreasing the rate of application. Increasing air pressure to the horn holes will increase the atomization rate. The choice of which adjustment to make will depend upon the rate of application desired. Follow the spray gun manufacturer's recommendation regarding type of thinner and its proportion in the spraying material when making adjustment.

g. Another common defect in spray patterns is "Mist" or "Fog", due to air pressure too high or fluid pressure too low. Reducing the differential as for the split spray pattern above will eliminate the mist unless it is caused by improper use of the gun.

5. Paint Application.

Downloaded from http://www.everyspec.com

a. A good finished paint film depends as much on proper handling of the gun as it does on correct adjustments of the equipment. In general, hold the spray gun 6 to 8 inches away from the surface being painted. This is about the distance of a normal hand spread. Begin the stroke before the trigger is pulled and release the trigger before the end of the stroke. This prevents "piling up" paint at the beginning and end of each stroke. Always keep the gun at right angles to the surface. Never swing the stroke in an arch which would put too much paint in the center of the stroke and too little on the ends. The objective is to obtain adequate coverage with an even application and without runs and sags.

b. Before applying the overall coat, spray small protruding parts such as hatch casings, door casings, rivet heads, and small built-in parts. This will ensure adequate coverage and will eliminate bridging and touching up later.

c. When spraying corners, first spray up to within 1 to 2 inches of the corner. Then turn the gun on its side and hold the gun at an angle to the corner. Starting at the top, spray downward along the edge so both sides of the corners are sprayed at once.

6. Sprayed Film Defects. The most common defects in spray paint coating are "Orange Peel," Runs and Sags, Pinholes, Blushing, and Peeling.

a. "Orange Peel" describes a painted surface that has dried with a pebbled texture. This may be caused by the use of improper thinners, insufficient atomization, holding the gun too far away from (or too close to) the surface, improper mixture of materials, or low humidity.

b. Runs usually result from using material that is too thin. Sags result from too much material. They can also be caused by allowing too big a lap in spraying strokes and by poor adjustment of spray gun or pressure tank. Dirty or partially clogged passages for air or fluid will also cause uneven distribution.

c. Pinholes may be caused by the presence of water or excessive thinner in the paint, or by too heavy an application of quick-drying paint. In either case, small bubbles form which break in drying, leaving small holes.

d. Blushing resembles a powdering of the applied coating. The cellulose material in the lacquer separates from its solvent and returns to its original powder form. Water usually causes this and it may happen because of surface moisture or excessive moisture in the air. When blushing occurs, the entire defective area of the coating must be removed.

e. Peeling is almost always due to careless workmanship in not cleaning the surface properly or incompatibility of paint films. Before any spraying is attempted the surface must be absolutely clean.

Downloaded from http://www.everyspec.com

CHAPTER 8. PAINT DETERIORATION AND FAILURE

A. General. Paints are not indestructible. Even properly selected protective coatings correctly applied on well-prepared surfaces will gradually deteriorate and eventually fail. Inspectors and personnel responsible for maintenance painting must be familiar with the signs of various stages of deterioration in order to establish an effective system of inspection and systematic repainting. Chief causes of abnormal failures are improper surface preparation, coating selection, application, or inferior paint quality.

B. Types of Deterioration and Failure.

1. Soiling. Exterior coatings normally gather dirt and become increasingly soiled. Among the most common sources of soil are rain-washed dirt from roofs, gutters or overhangs, air pollution, pollen, salt residues, and sap drippings from trees. Soiling is less evident on paints that chalk rapidly since the dirt is readily washed off with the chalk during rainstorms.

2. Color Change. Many colors, especially the brighter ones, fade and turn dull with time. Fading is aggravated by chalking since the chalk produced is generally white or very light and masks the color. Enamels and latex paints fade less rapidly than the softer linseed oil paints. Whites, especially those based on linseed oil, will yellow in areas protected from sunlight.

3. Flatting. Glossy paints lose their gloss and eventually turn flat with age. This is a sign of initial breakdown of the vehicle at the surface of the paint. Chalking soon follows loss of gloss. Enamels flatten (and chalk) less rapidly than the softer linseed oil paints. Interior paints will flatten with age due to repeated washing. If moisture in the form of fog, rain, or dew lies on the surface of newly applied paint before it is thoroughly cured, it may cause a spotty or complete loss of gloss of the paint. This is primarily an appearance problem that makes a new paint job look inferior. Uneven gloss on coatings over concrete, stucco, and plaster surfaces may also be caused by improper proportioning, mixing, placing or curing of the substrate material. Subsequent reaction of the substrate with water may also cause popping of the substrate, taking the coating with it.

4. Chalking. Chalking is the result of weathering of the paint at the surface of the coating. The vehicle is broken down by sunlight and other destructive influences, leaving loose, powdery pigment at the surface that can easily be rubbed off with the fingers. Chalking takes place more rapidly with softer paints such as those containing linseed oil as the vehicle. Chalking is more rapid in areas exposed to large amounts of sunshine. Controlled chalking can be an asset, especially in white paints, since it is a self-cleaning process and helps to keep the surface clean and white. Furthermore, by gradually wearing away, it reduces the thickness of the coating, thus decreasing excessive build up of the paint film. However, chalking or self-cleaning paint should not be used above natural brick or other porous masonry surfaces as the chalking will wash down and stain or discolor these areas. Abnormal chalking on wood substrate frequently occurs on surfaces that were not properly primed and did not receive an adequate number of finish coats. This allows oil in the paint to be drawn into the porous wood and results in early, heavy chalking. Maintenance painting over exterior chalked surfaces is one of the main causes of premature paint failures. The adhesion of water-thinned paints applied to chalky surfaces is poor. However, even solvent-thinned paints do not adhere well to heavily chalked surfaces. It is important to clean off as much chalk from the surface as possible before repainting.

5. Checking and Cracking. Checking and cracking describe breaks in the paint film, formed as the paint becomes hard and brittle. Temperature changes cause the substrate and overlying paint to expand and contract. As the paint becomes hard, it gradually loses its ability to expand without breaking. Checking is described as tiny breaks that take place only in the upper coat or coats of the paint film without penetrating to the substrate. Cracking describes larger and longer breaks that extend through to the substrate. Both are a result of stresses in the paint film which exceed the strength of the coating. Checking arises from stresses within the paint film. Cracking, on the other hand, is caused by stresses between the film and the

Downloaded from http://www.everyspec.com

substrate. Cracking will generally take place to a greater extent on wood than on other substrates because of greater expansion. Checking and cracking are aggravated by excessively thick coatings because of their reduced elasticity. In addition, repeated wetting and drying of wood surfaces cause cycles of expansion and contraction, therefore aggravating tendencies to cracking.

6. Wear and Erosion. As paint chalking continues, the entire coating wears away or erodes and becomes thinner. Eventually, it becomes too thin to hide the substrate.

   a. Interior areas around switches or door handles may be cleaned often during the life of the paint in order to remove fingerprints. Eventually, the paint will be removed by abrasion of the cleaner.

   b. Floor finishes, traffic marking paints, and other coatings subject to abrasion usually wear out at points of maximum or continuous traffic long before they would tend to degrade otherwise.

7. Alligatoring. Alligatoring of a paint film, when the outer layer of paint cracks and presents a pattern similar to alligator leather, occurs when relatively hard finishing coats are applied over relatively soft priming or underlying coats. Undercoats that are too rich in oil, or are allowed insufficient drying time, cause this softness. Specific causes may be application of an enamel over an oil primer, or painting over bituminous paint, asphalt, pitch, shellac, grease, or wax. Expansion and contraction of the painted surface where paint coats have unequal flexibility, due to soft undercoats and hard outer coats, causes alligatoring and checking. To avoid this failure, allow undercoats to dry sufficiently hard before applying the next coat. Use undercoat materials that dry harder than the topcoat materials chosen.

8. Crawling. Crawling occurs when the new coating fails to wet and form a continuous film over the preceding coat. Examples are applying latex paints over high gloss enamel or applying paints on concrete or masonry treated with a silicone water repellent.

9. Crumbling, Scaling, Flaking and Peeling. These are all failures involving complete loss of the coating over some part of the surface. If cracking occurs with relatively close spacing, the moisture penetrating through the coating will cause small pieces of the coating to lose adhesion and fall off the substrate. If the cracks are large, the eventual result is the most rapid form of deterioration, flaking and peeling. The penetrating moisture loosens relatively large areas of the coating. The paint then curls slightly, exposing more of the substrate and finally flakes off. Peeling is an aggravated form of flaking in which large strips of paint can be easily removed. When large areas of substrate become exposed, the coating has reached the point of complete deterioration and is in a state of neglect. All of the old coating may have to be removed to be sure it does not create problems by continuing to lose adhesion, taking the new coating with it. Continued neglect may also lead to deterioration of the structure resulting in expensive repairs in addition to painting costs.

10. Blistering, Lifting and Inter-coat Peeling.

    a. Blistering appears in the paint film when the topcoats lift from the base, leaving the prime coat intact. This condition is most frequently the result of moisture being absorbed by wood. Exposure to heat from the sun causes this moisture to migrate to the surface of the wood and collect under the paint film to form blisters. Humidity inside the building can best be controlled by proper ventilation, repairing leaks in walls, roofs and plumbing, and by operating dehumidifiers. Moisture can be prevented from reaching siding by installing vapor barriers between plaster and insulating in new construction or by the application of moisture-resistant paint to interior sides of exterior walls and ceilings of existing buildings. To remedy, after the cause has been rectified, scrape and sandpaper blistered areas and repaint.

    b. On metals, blistering may occur through osmosis, where water passes through the coating. Another cause of blistering is excessive cathodic protection.

Downloaded from http://www.everyspec.com

11. Wood Resin Bleed-Through. All trees have branches that start well within the trunk. Therefore when boards are cut, especially flat grained, they will contain cross sections of these branches or knots. These knots contain resinous material that can cause coatings to discolor, become brittle, and crack long before the surrounding coating. To overcome this, remove all paint from the knots and surrounding area down to the wood. Seal with a VOC compliant sealer and repaint with at least two coats of the same paint used in the surrounding area. Some pine, especially of lower grades, contains pockets of pitch or resin similar to that found around knots. This resin will rise to the surface and discolor and eventually degrade the paint in that area. Such areas should be cleaned, sealed, and repainted. If the pitch pocket is below the surface, a hole should be drilled to allow drainage and then puttied and sealed before painting. Small isolated spots of pitch, which appear on the surface and have not harmed the paint, can be removed by scraping and washing with mineral spirits.

12. Rust. Both iron and steel will readily rust when exposed or unprotected. If moisture penetrates through thinly coated sharp corners or breaks in the film, rust is formed. This rust will increase in area, lifting the edge of the film around the break, then creep underneath the film, and continue the process. Rusting is accelerated in humid atmospheres and even more so in marine atmospheres. Rusting will also spread under the paint film in areas that have been insufficiently cleaned.

13. Efflorescence. Concrete, stucco, masonry, and plaster contain water-soluble salts which dissolve in moisture carried through the substrate and then crystallize on the exposed surface. If the paint is water permeable, such as latex paint, the solution will pass through the coating and discolor the surface in a non-uniform spotty manner. If the coating is not permeable, the salts may be deposited under the paint film and cause it to lose adhesion in spots. All efflorescence must be removed and the cause eliminated before repainting.

14. Mildew. Mildew affects paint films most often in southern localities where high humidity and warm temperatures accommodate its growth. Mildew's growth produces a black or green discoloration. Mildew spores in the air stick to tacky paint films and grow in colonies. A simple test for mildew would be to apply a dilute household bleach solution in water to the affected areas. Loss of color on the surface indicates the presence of mildew. Badly mildewed surfaces must be thoroughly scrubbed with household bleach followed by soap and water before repainting. Rinse with fresh water and allow a day or two for drying. See Chapter 3, Paragraph F., Waste Disposal, for environmental requirements associated with this procedure. Add a prepared mildewcide to new paint and mix thoroughly. These compounds may be purchased commercially and very small amounts of the order of 1 ounce to 1 gallon of paint are needed. The use of mercury and arsenic compounds is prohibited due to their toxicity.

Downloaded from http://www.everyspec.com

This page left intentionally blank.

Downloaded from http://www.everyspec.com

CHAPTER 9. CUTTERS AND BOATS GENERAL INFORMATION AND MAINTENANCE PAINTING

A. When To Paint. Painting of cutter surfaces should be considered only when it is necessary to prevent corrosion or deterioration of the surfaces. Soiled surfaces should be cleaned rather than repainted.

1. Interior Surfaces. Interior surfaces are generally painted more frequently than necessary. Repainting too frequently results in paint film failure due to films which are too thick or incompatible. The interior paints that have been recommended are designed to hold up under repeated washing. Scrubbing the surface with detergent and water will usually result in a clean, fresh appearance. Interior repainting shall normally not be required more often than once every 3 years. The minimum number of coats required for hiding a surface should be applied. One coat is usually sufficient.

2. Hull Exterior and Superstructure Surfaces. Exterior surfaces should be repainted prior to failure of the paint film. Exterior steel surfaces on cutters and boats above the main deck shall not normally be top coated more often than every two years. Exteriors of hulls above the boot-topping should not normally be top coated more often than every year. Touch-up painting rather than complete repainting should be considered. Units should refer to the Cutter Class Maintenance Plan (CCMP) for determining frequency of painting. For example, WMECs are now on an eight-year schedule for painting freeboard and superstructure.

3. Underwater Body and Boot-Top Surfaces. Underwater body and boot-top surfaces shall be repainted at intervals prescribed by the MLC Commander under the guidance of the Commandant. The anticorrosion primer used with ablative paints should remain in place for the life of the paint (approximately 9-12 years). Do not remove the antifouling system if it is not necessary.

4. Weather Deck Surfaces (Non-Flight Deck). The various non-skid/slip resistant systems used for weather decks should provide about 3-6 years of service. Cosmetic "wash" topcoats are allowed for broadcast grit and MIL-PRF-24667 non-skid systems, but shall not be used on slip resistant sheeting. Cosmetic "wash" topcoats should be used sparingly because they will have an adverse effect on the ability of the non-skid system to prevent slips and falls.

5. Flight Deck Surfaces. Flight decks are certified by the Navy and must be applied and maintained in accordance with NSTM Chapter 634, Deck Coverings. Flight deck coatings shall be applied by commercial contractor, Coast Guard Yard, or USN Ship Intermediate Maintenance Activity (SIMA). An item to be determined on a pre-award survey is whether contractor personnel are competently trained and recognized by the manufacturer to ensure that the non-skid is applied according to coating manufacturer's instructions and that the manufacturer will honor the warranty. Contracts may specify a warranty by the contractor but care should also be taken to preserve any standard warranty provided by the manufacturer. In lieu of top coating, decks shall be washed using Adhesion Promoter/Cleaner to remove stains, chalking and residual oil (Note: Federal Law prohibits units from allowing any cleaning solvents to enter the sea within 12nm of shore). Ship's work force is authorized to spot repair flight decks in order to control underlying corrosion in accordance with the guidelines set out in NSTM 634, Deck Coverings. Ships are also encouraged to review MLCA's Flight Deck Preservation Web-Based Interactive Tutorial, located on the MLCA Naval Engineering Website.

B. Changing Painting Practices. CG policy requires products which meet minimum technical needs and which have the lowest potential for injuring personnel and causing environmental damage. In the past, CG policy required the use of Federal and Military specifications when available. Coatings selected for this Manual still include specifications developed by other federal agencies, primarily the Naval Sea Systems Command (NAVSEA), in order to avoid duplicating costly R&D work. However, there is a much greater reliance on commercially developed products. Before being entered in the manual, all coatings and systems are

Downloaded from http://www.everyspec.com

reviewed technically to determine suitability for CG use. Projects have been established to test and develop new coatings when specifications do not meet minimum technical needs. Lists of Coast Guard approved commercial products that meet minimum technical needs have been issued in this Manual as required to meet CG requirements. Coatings and painting practices are changing rapidly in response to environmental laws and occupational health concerns. Changes will continue to occur at a rapid rate during the next decade.

Prototypes of any new material require prior approval by the Commandant (G-SEN), which has delegated this authority to ELC(01). Units wishing to test new coating systems or materials shall submit prototype requests to ELC(01) via their cognizant MLC(v); copy to Commandant (G-SEN), ELC (024), non-cognizant MLC(v), and, if appropriate, Acquisition Program Manager. Letter reports of performance data will be described in the approval document.

C. Vessel Maintenance Painting.

1. Touch-Up Painting On Steel. Any of the surface preparation methods discussed in Chapter 5 of this Manual may be used for steel surfaces. Choice of method should be based on equipment availability, manpower skills, total area being worked, and accessibility. Use the same primer as the original application. Apply in accordance with manufacturer instructions. One exception is inorganic zinc primers because they usually require a Near-White Blast Cleaning (SSPC-SP 10) which is generally beyond the capabilities of the ship's force.

2. Touch-Up Painting On Aluminum. Abrasive blasting aluminum and aggressive disk sanding down to bare metal are not encouraged because these methods remove too much metal from the hull. Loose paint should be scraped off. Rough edges should be feathered out and the original primer and remaining paint should be top coated. Exposed aluminum should be reprimed with the same primer as the original application. Apply in accordance with manufacturer instructions.

3. Alternative Primers. Table 9-1 provides alternative primer systems for the ship's work force to use for touch-up maintenance work if the high build epoxy primers called out by this Manual are not available. The primers are selected because they have been frequently used in the past, are readily available, and have low hazardous pigment concentrations. The tables found elsewhere in this Manual should be used to determine correct topcoat and color.

TABLE 9-1: Alternative Maintenance Primers for Steel and Aluminum Vessels

Touch up Area	Preparation	Coating (Brush or Roller)	Rating
Interior Dry Areas w/o Corrosion	Hand Tool Cleaning or Power Tool	1 coat Zinc Molybdate Alkyd Primer TT-P-645	Very Good
Exterior Problems (For vessels operating in fresh or salt water)	Cleaning	2 coats Zinc Molybdate Alkyd Primer TT-P-645	Good
Exterior/Interior Wet Areas with Corrosion Problem (For vessels operating in salt water)	Power Tool Cleaning Near White Metal	2 coats Epoxy Polyamide Primer, Formula 150 MIL-DTL-24441 Type III or IV	Excellent
Appearance	Power Tool Cleaning	2 coats Zinc Molybdate Alkyd Primer TT-P-645	Fair

D. Critical Coated Surfaces. Critical coated surfaces are those areas that have experienced premature failures in the past that have resulted in avoidable repair costs. Coatings specifications address these critical areas by requiring greater degrees of cleanliness, inspection, and quality control. Critical coated surfaces are

Downloaded from http://www.everyspec.com

defined as all exterior applications (including but not limited to the underwater body and appendages, freeboard, weather decks, flight deck, superstructure, mast, and all appurtenances, thereto), bilges, tanks/voids (including but not limited to ballast, potable water, and fuel), forepeak compartments, chain lockers, and all intake vent plenums and trunks between the skin of the ship, all uptake spaces, helicopter deck RAST track troughs or their equivalent; and high traffic interior decks.

E. Rust Converters and Stabilizers. Continued challenges surrounding internal corrosion within tanks, bilges, voids, and inaccessible areas require innovative alternatives. In many cases, rust converters, stabilizers, and iron phosphate coatings, such as RDP Rust Deoxidizing Primer, offer an effective and environmentally sound method of protecting steel structures on a temporary basis. Use of rust converters, stabilizers, and iron phosphate coatings is highly encouraged. Adding this option to a unit's materiel maintenance program can reduce metal wastage caused by unchecked corrosion and also reduce the manpower effort required to eliminate corrosion if a coating system fails. However, it should be noted that these products do not provide for as long term performance as surfaces properly prepared and painted in accordance with this Manual. The iron phosphate solutions deoxidize rusted metal, removing the rust "stain" and prevent continued oxidation for up to 90 days. Repeated applications on treated steel will stop or slow the corrosion process, during the interim period, until a new coating system is applied. When using rust converters, stabilizers and iron phosphate coatings, units shall conduct an evaluation of the product with full concern for state and local environmental regulations and hazardous materials concerns. Assistance in this evaluation is available from the cognizant CEU or MLC (vs). Additionally, units shall set up adequate ventilation if using a rust converter or stabilizer in a confined space. Rust converters and stabilizers are only for use at the unit level and are not authorized for use by industrial level activities. Rust converters are not authorized for use on flight deck surfaces. Rust converters must be fully removed when painting surfaces as they will interfere with the adhesion of new applied paints. Rust converters should not be used on high strength steels, such as tools and fasteners, as they can cause embrittlement of the steel.

F. Preconstruction Primers. Also known as shop primers, preconstruction primers are used as a temporary coating to protect steel from corrosion during welding, storage, and fabrication. Preconstruction primers shall be removed prior to applying the permanent coating system on all critical coated surfaces as defined in section 9.D. Preconstruction primers may be left in place in other interior areas (such as machinery spaces, habitability spaces, etc.) if they are intact, uncontaminated, and compatible with the overcoating system.

G. Powder Coatings. Powder coating is authorized for use on exterior topside or interior applications where traditional liquid applied coating systems are difficult to maintain due to a severely corrosive environment, high wear, or abrasion. It should be noted that powder coatings are subject to chipping damage from mechanical impact. It can be difficult to repair this damage with traditional liquid coatings and achieve satisfactory cosmetic results. Powder coatings are usually applied by electrostatic spray or fluidized bed. The final step in the process involves heating in an oven at temperatures from 275°F to 450°F. The need for an oven limits the application to items that can be removed from the cutter or boat, withstand the high cure temperatures, and sizes that can be fitted in the available oven. The powder that is used should conform to the requirements of MIL-PRF-24712 with Type IV Polyester TGIC recommended for exterior applications and Type I Epoxy for interior applications. Table 9-2 provides a sample list of items that are candidates for the application of powder coatings. U.S. Navy Uniform Industrial Process Instruction (UIPI) 0631-901 may also be consulted for a complete treatment of powder coating application and areas of applicability.

H. Stripe Coats. Stripe Coating refers to the practice of applying an extra layer of paint on areas such as corners, edges and welds. (It is not to be confused with the method of painting stripes, "striping", discussed in Chapter 7.) Stripe coating will build up the coating thickness at edges where paint tends to shrink away from the edge surface and fail prematurely. It also fills in surface irregularities such as porosity in welds. Stripe coats shall be applied after the application of the primer coat. Use the same coating for the stripe coat as was used for the primer coat. Stripe coating is a proven method for increasing the useful life of a coating system. It is required for all critical areas as defined in section 9.D

Downloaded from http://www.everyspec.com

TABLE 9-2: Candidate Powder Coating Applications

Anchors	Fire Hose Racks, Fire Extinguisher Holders	Overhead Panels
Battle Helmets	First Aid Boxes	Padeyes
Boat Booms	Foundations: AFFF/PKP	Perforated Plates for Hull Openings and Tank Entries
Brackets	Fuel Oil Spill Kit Boxes	Piping, Interior/Exterior
Bunks and Fixtures	Furniture: File Cabinets	Sea Chest Strainers
Chains: Safety, Anchor/Links	Gun Mounts and Hardware	Sea Transfer Equipment
Chocks	Hand Railings	Ship's Communication Speaker Boxes
Control Panels	Hatches	Signaling Equipment
Damage Control Equipment: Flashlight Holders, Battle Lanterns	Head Facilities: Medicine Cabinets, Towel Racks, Partitions, Doors, Blow Dryers	Signs: Refueling, Damage Control, Medical, Directional
Deck Gratings	Instrument Consoles	Sound Powered Telephone Receiver Holders
Deck Hardware: Refueling Gear, Portable Booms, Underway Replenishment Equipment	Junction Boxes	Spare Parts Stored In Free Floods
Deck Light Covers and Deflectors	Ladders: Interior/Exterior, Railing and Related Hardware	Stanchions
Diesel Motor Covers	Lantern Mounts	Stretchers, Strokes
Doors: Watertight and Partition	Light Fixtures: Interior/Exterior	Swimmer's Safety Line Reels and Bases
Drip Pans	Line Reels and Cable Reels	Tank Covers
Electrical Cabinets	Lockers: Ammunition, Pyrotechnic, Clothing	Tool Boxes
Electrical Motor Housings	Lube Oil Strainers	Ventilation: Fixed Sectional and Screens
Exterior Turnbuckles (Lifeline)	Mess Deck Furniture	Weapons Handling Equipment
Fasteners	Metal Shoring	

Downloaded from http://www.everyspec.com

CHAPTER 10. CUTTERS AND BOATS SAFETY COLORS AND MARKINGS

A. Colors For Safety. The Coast Guard uses two different color-marking systems. The Coast Guard safety color code for marking physical hazards on cutters and boats is in accordance with the standards set forth in Title 29, Chapter XVII, Part 1910, Subpart J, paragraph 1910.144, of "Occupational Safety and Health Standards" (Federal Register, Vol. 39, No. 125). In addition, Coast Guard cutters larger than 140' are marked with the Navy photoluminescent system from NSTM Chapter 079 to facilitate emergency exit and damage control during a lights out power loss. The Navy photoluminescent system is not the CG "safety marking system". These two systems are presented in separate sections in this chapter to emphasize their differences. Where the Navy system is applied to safety related items on the ship, it is not considered necessary to mark items a second time to conform to 29 CFR.

B. The Coast Guard "Safety Marking System" according to 29 CFR.

1. Red for Fire Protection. Red (11105) is standard for the identification of damage control and fire protection equipment. It shall be used for fireplugs, fire alarm boxes, fire main valves, flooding valves on dry-docks, transmitting antenna hardware and sprinkler lines (with the exception of magazine sprinkler lines). In painting fire main valves, the valve body, bonnet and handle shall be painted. Valve stems and threads on the valve body shall not be painted.

   a. Panels of red (11105) shall be painted behind fire fighting equipment on walls and columns.

   b. Extinguishers should not be painted a color that differs from the color supplied by the manufacturer. However, if they are painted, care must be taken to ensure that use and hydrostatic test data are not obliterated. Hydrostatic test data shall be marked on extinguisher bodies in accordance with NFPA No. 10, paragraph 5-6.4. NFPA No. 10 can be obtained from the National Fire Protection Association, 1 Batterymarch Park, Quincy, MA 02269.

   c. Safety cans or other portable containers of flammable liquids having a flash point at or below 80°F, excluding shipping containers, shall be painted red (11105). The name of the liquid shall be conspicuously stenciled or painted on the can in yellow along with the word FLAMMABLE. Fifty five-gallon drums are not considered portable and are therefore painted yellow (13538) with black lettering.

   d. Fire axes are painted red (11105). The areas three quarters of an inch from the cutting edge and one and one quarter of an inch from the tip of the head are not painted and the handle is not painted except for the last six inches from the end. Preserve the unpainted metal and wood with varnish.

   e. Emergency stop bars or buttons on machines shall be painted red.

   f. Electrical circuit breakers or switches that are used for emergency shutdown of equipment or electrical service shall be painted red. The equipment or service controlled and the applicable voltages will be stenciled (or otherwise marked) in yellow (13538) on the base of the breaker box if the equipment it controls is not otherwise evident.

   g. To relate extinguisher types to classes of fire, further symbols and color designations are recommended. Extinguishers suitable for more than one class of fire should be identified by multiple symbols placed in a horizontal sequence.

      (1) For Class A fires (wood, paper, rubbish, deep-seated fires), the symbol is a green triangle containing the letter A in white. An applicable extinguisher is a multipurpose dry chemical.

Downloaded from http://www.everyspec.com

(2) For Class B fires (oil, gasoline and other flammable liquids which do not mix with water), the symbol is a red square containing the letter B in white. Applicable extinguishers are carbon dioxide and dry chemical.

(3) For Class C fires (electrical equipment), the symbol is a blue circle containing the letter C in white. Applicable extinguishers are carbon dioxide and dry chemical.

(4) For Class D fires (metal), the symbol is a yellow five-pointed star containing the letter D in black. Fire of high intensity may occur in metals such as titanium, magnesium, zirconium, sodium, potassium, etc. Ignition is usually the result of friction (grinding), exposure to fire or high heat, and in some cases exposure to moisture. Normal extinguishing agents should not be used for Class D fires. Approved extinguishing agents are available in dry powder form that may be applied with a scoop or shovel or by means of an extinguisher designed for dry powders.

2. Yellow For Hazard Marking. Yellow (13538) is the accepted color used to paint striking, stumbling, and falling hazards. Where suitable, alternate bands of black and yellow shall be used. Thus, yellow (or black and yellow) shall be applied to low overhead hazards, guard railings, the edges of platforms and pits, crane beams, pulleys, blocks, skids, hand trucks, and the bottom panel (or lower 12 in.) of rollup doors and moldings, holding the door track to a height of 5 ft. (inside and out).

   a. On stairways, yellow (13538) shall be applied in 4 in. bands immediately under the tread on top and bottom risers. Yellow markings are not required on ladders, inclined ladders and stairways without risers. Yellow shall also be used to mark the emergency gate which connects tanks in dry-docks.

   b. Drums and storage tanks containing flammable liquids and gasoline-powered equipment shall be painted yellow (13538). Aerial-Floatable Drop Pump Canisters (AFDPC) shall be painted international orange (12197).

3. Orange For Hazard Marking. International orange (12197) is standard for hazards that are likely to cut, crush, burn, or shock personnel. It shall be applied on or near dangerous parts: gears, shears, planers, brakes, rolling and crushing devices, forming presses, punch presses, and riveting machines. It is desirable to use orange on the under side of guards over belts or gears in order to signal against carelessness by exposing a gaudy color to the eye. The exteriors of such guards shall be gray.

   a. It shall be used for guards around hot pipes, exposed electrical wires and connections.

   b. Overhead electric wires or rails for conveying and hoisting equipment should be conspicuously marked with orange on adjacent beams, covers or supports. The inside of switch and fuse box doors and covers are painted orange to reveal a vivid color and encourage the proper closing of panel doors at all times.

4. Blue For Electrical Equipment.

   a. Blue (15123) shall be used in industrial areas for switch and fuse box control panels and off-and-on control boxes on machinery. In personnel facilities and offices, electrical control panels may be in the wall color. In all instances the inside areas of such boxes should be colored Orange (12197) using paint or colored decals. Emergency shutdown and main circuit breakers or switches shall be painted red in accordance with this chapter.

   b. Blue is also applicable to electrical control mechanisms, receiving antenna hardware, electric shore tie connections, welding gear, the control boxes of hoists, winches, and cranes.

Downloaded from http://www.everyspec.com

5. Green For First Aid. Green (14260) shall be used for the identification of first aid equipment. It shall be painted on first aid and medicine cabinets, stretcher boxes, cabinets for gas masks, safety showers, and for all signs relating to first aid and safety. Green is also used for discharge valves on dry-docks.

6. Purple For Radiation Hazards. Ample protection must be provided against exposure to nuclear radiation hazards. Such radiation, associated with radioactive isotopes, chemicals, and fissionable materials, is invisible but may lead to severe injury. The storage, packing, and handling of radioactive chemicals are stringently controlled by the United States Department of Energy. To safeguard personnel, the radiation symbol shall be applied in all facilities where radiation hazards exist.

   a. Radiation areas and hazards shall be marked in accordance with the Code of Federal Regulations (CFR) Title 10, Part 20, paragraphs 20.202 through 20.204. The three-bladed, propeller shaped radiation symbol shall be purple (27142) on a background of yellow (23538). The CFR permits either magenta or purple for the symbol. Consequently, when the symbol is furnished by others, it may be either color.

   b. Special tags and labels shall be attached to all containers, receptacles, storage areas, or rooms, in order to caution against handling or entry. For further protection, the specific type of hazard should be described with any special instructions. Where necessary, special cautions to be observed can be lettered on or immediately adjacent to the radiation caution symbol.

7. Aisle Marks. It is good practice to use aisle marks and lines to indicate safety aisles and storage areas. White marks and lines shall be used where floors are dark, and black where floors are light. Lines and marks around hazards or along pit and platform edges shall be yellow (13538).

8. Safety Helmets. Safety helmets (hard hats) are required at all Coast Guard Units to provide protection against injuries caused by falling and swinging objects, and electrical shock. The color of the safety helmets and corresponding work assignments are shown in Table 10-1. Safety helmets should not be painted.

C. Use of the Navy Damage Control Marking System.

TABLE 10-1: Color for Safety Helmets

COLOR	ASSIGNMENT
WHITE	Officers/CPOs/Safety Observer
YELLOW	Rig captain/Deck Supervisor
GREEN	Signalmen/phone talkers
BROWN	Winch and Boom Operators
RED	Line-throwing gunners (or line heavers)
WHITE (with red cross)	Corpsman
BLUE	Deck riggers/line handlers
ORANGE	Supply personnel
GRAY	All others/Deck Workers

1. General.

   a. The information in this section is based on the Naval Ship's Technical Manual, Chapter 079, VOL II. In cases where information in the Coatings and Color Manual and the NSTM conflict, the Coatings and Color Manual shall take precedence.

   b. Damage control markings may be retro-reflective, photoluminescent or a combination of both, depending on the marking's purpose.

Downloaded from http://www.everyspec.com

c. The provisions of this Manual are minimum requirements. Cutter COs and OICs may authorize additional markings and/or those larger than required if a greater degree of safety is desired.

d. Location requirements are intended to meet the majority of the cutter's needs. Some ship configurations may not allow strict conformance to policy and in these instances locations shall be chosen that: (1) are as near as practicable to required locations; (2) are as visible as possible; and (3) are situated so as to receive maximum excitation lighting.

e. Cutter COs and OICs may use smaller markings when ship configurations do not allow minimum size requirements to be met. In doing so, only that size reduction necessary to meet ship configuration is authorized. Concurrently, where "suitable sized photoluminescent background" is specified, cutter COs and OICs shall require background sizes which provide for suitable visibility to meet the safety considerations of their crews.

f. Photoluminescent materials shall not be placed where they may violate material condition Dog Zebra (i.e., be visible from the exterior of the vessel).

g. Photoluminescent materials shall not be installed inside the bridge/pilothouse or other ship control stations where night vision is a necessity.

h. Photoluminescent self-adhesive stickers/tape, pre-fabricated signs, etc., are currently available from both the stock system and from commercial sources. These are preferred because photoluminescent paints are no longer readily available. In selecting products, flexibility is encouraged, including unit or locally fabricated markings. However, only those photoluminescent materials possessing the following "light generating characteristics", after excitation may be utilized:

(1) 20 microlamberts after 2 minutes.

(2) .4 microlamberts after 30 minutes.

(3) .1 microlamberts after 2 hours.

(4) .04 microlamberts after 4 hours.

(5) .01 microlamberts after 8 hours.

i. Retroreflective materials (such as used on PFDs, liferings, etc.) shall NOT be used to satisfy marking requirements unless otherwise specified in this chapter.

j. Equipment normally stowed inside repair lockers shall not be marked.

k. This chapter does not require the use of photoluminescent materials in all cases. Photoluminescent marking requirements are specifically denoted by ***bold, italicized*** type where required.

2. <u>Damage Control Marking Requirements for Cutters (140’ and greater)</u>.

a. Compartment Bull’s Eye (Interior).

(1) Compartment bull’s eyes are to be applied in each space or compartment to identify the space, setting forth the frames which bound the space and the division responsible. An example is shown in Figure 10-1.

(2) A bull’s eye should be visible from each access to the space.

Downloaded from http://www.everyspec.com

(3) Lettering will be two-inches in height applied over a 12-inch high by 15-inch wide photoluminescent label.

(4) For photoluminescent adhesive material, use blue retro-reflective lettering, two inches high.

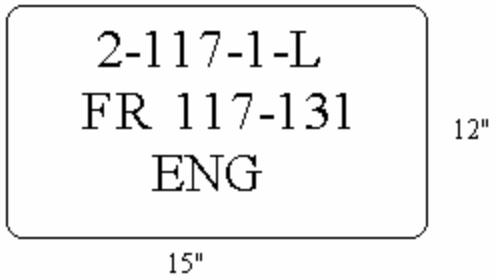

Figure 10-1 Compartment Bulls-Eye

b. Aqueous Potassium Carbonate (APC) Extinguishing Systems. APC systems shall be marked with "APC" in 1 inch red letters on a suitable sized white background located as near as practicable to the actuating device(s).

c. Portable CO2, Halon, PKP, and AFFF Extinguishers and Hose Reels. The bulkhead directly above these extinguishers and hose reel actuators shall be marked with "CO2", "HALON", "PKP", or "AFFF", as appropriate, in 3 inch red letters on a suitable sized ***photoluminescent*** background.

d. OBA Storage Cabinets. All sides of these cabinets normally visible shall be marked with "OBA" in 3 inch red letters on a suitable sized ***photoluminescent*** background.

e. OBA Canister Stowage Cabinets. All sides of these cabinets normally visible shall be marked with "OBA" in 3 inch red letters over "CANNISTER" in 1 inch red letters on a suitable sized ***photoluminescent*** background.

f. Compartment Frame Markings. Frame numbers preceded by the letters "FR" shall be marked at least once in each compartment and shall be in 2 inch letters of a color contrasting with the bulkhead. Markings shall be placed at eye level or higher. In compartments over 24 feet in fore/aft length, these markings shall be applied once every 24 feet.

g. Battle Dressing Station (BDS) Directional Arrows. On cutters 180 feet and over, these signs shall be applied on bulkheads in each space over 15 feet in length and on the bulkheads of all passageways indicating the principal route to the nearest BDS. In passageways over 15 feet in length, the markers are to be placed every 15 feet or less depending on the configuration of the passageway. See Figure 10-1 for specific sign configuration.

Downloaded from http://www.everyspec.com

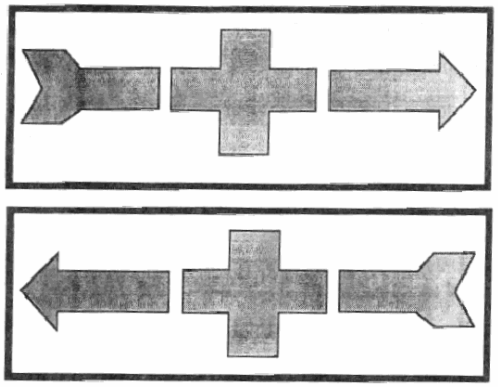

Figure 10-2: Battle Dressing Station (BDS)
Directional Markers

(1) Arrows shall be red, no smaller than 1 inch in height, and no smaller than 12 inches in length.

(2) Crosses shall be red, no smaller than 4 inches in height and width.

(3) The arrows and crosses shall have a 1/8 inch black border on a plain white background for exterior use and on a ***photoluminescent*** background for interior use.

(4) On the interior surfaces of the cutter, the signs shall be placed not less than 12 inches and no higher than 36 inches above the deck. On exterior surfaces, signs shall be placed approximately 60 inches above the deck.

(5) When displayed in conjunction with Exit and/or Decon Station routing markers, the signs shall be stacked above one another with the BDS sign topmost and the Exit sign nearest the deck.

(6) Signs applied to the interior of the cutter shall be ***photoluminescent*** in case of lighting failure, however, placement of photoluminescent signs shall not violate the provisions of sections 10.B.1.e and 10.B.1.f.

h. Decontamination Station Directional Markings: On cutters equipped with CBR equipment, these signs shall be applied approximately 60 inches above the deck on the external surfaces of the cutter indicating the principal and most direct route to the closest decontamination station. Entrance signs shall be placed at the entrance door to each station. Exit signs shall be installed on the shower side of each exit door from each station. See Figure 10-3 for specific sign configuration.

Downloaded from http://www.everyspec.com

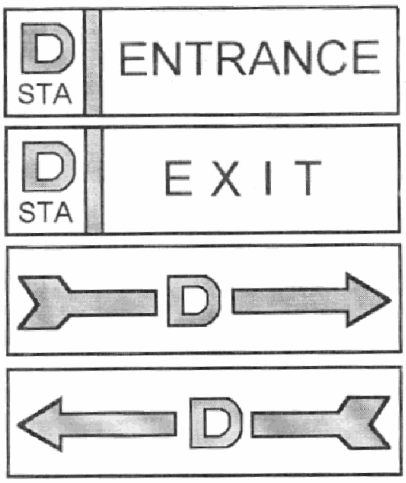

Figure 10-3: Decontamination Entrance, Exit and Route Signs

(1) Decontamination station entrance, exit, and route signs shall be no less than 12 inches in length, and no less than 3-1/2 inches in height.

(2) The “D” shall be no less than 3 inches in height, shall be green in color and be bordered inside and out with a black 1/8 inch border.

(3) The arrows on the route markers shall be green, no less than 1 inch in height and bordered by a 1/8 inch black border.

(4) The “STA” on the entrance and exit signs shall be no less than 1/2 inch in height and shall be black.

(5) The divider between the “D” on the entrance and exit sign shall be black in color and 3/8 inch wide.

(6) The "ENTRANCE" and "EXIT" shall be no less than 2 inches in height and shall be black in color.

i. Interior And Exterior Fire Stations/Plugs. The bulkhead immediately above all fire stations shall be marked with 1 in. white letters on a suitable sized red background as per Figure10-4. In lieu of the aforementioned marking scheme, interior bulkheads may be marked with 1 inch red retro-reflective lettering with a suitable sized photoluminescent background. However, exterior bulkheads shall not be marked with photoluminescence.

Downloaded from http://www.everyspec.com

Figure 10-4: Fire Stations/Plugs

(1) The background shall be of a suitable size and red in color.

(2) The lettering shall be made of one inch white letters.

j. Fire Station Cutout Valve Locations. The actual cutout valve location shall be marked with "COV" followed by the valve number in red 1 inch letters/numbers on a suitable sized ***photoluminescent*** background. In those instances where the valve is not normally visible (such as behind a false overhead panel), the marking shall be placed on the panel itself and shall be located within 12 inches of the valve(s).

k. Zebra Classified Firemain Segregation Valves. These valves shall be marked with "COV" in red 1 inch letters followed by the 2 inch red letter "Z" followed by the valve number in red 1 inch numbers. These markings shall be on a suitable sized ***photoluminescent*** background and shall be located within 12 inches of the valve(s)

l. Fixed Fire Extinguishing Systems. All fixed system actuating points/devices shall be marked with the letters "AFFF", "HALON", or "CO2" as applicable in red 1 inch letters on a suitable sized ***photoluminescent*** background and shall be located within 12 inches.

3. Marking Requirements for Egress Routes, Fittings, and Equipment.

a. Exit Signs/Arrows. In those compartments with a length or width of 30 feet or greater, ***photoluminescent*** exit signs shall be placed on bulkheads of passageways every 15 feet along the "primary" egress route only. No "double directional" signs shall be used. The signs shall be located no lower than 12 inches and no higher than 36 inches above the deck. When used in conjunction with Battle Dressing Station routing markers, the signs shall be stacked one above the other with the Exit sign nearest the deck and the BDS sign topmost. Placement of photoluminescent signs shall not violate provisions of 10.B.1.e and 10.B.1.f of this Manual. Photoluminescent signs/materials shall be in accordance with 10.B.1.g of this Manual. See figure 10-5 for exit sign configuration.

Downloaded from http://www.everyspec.com

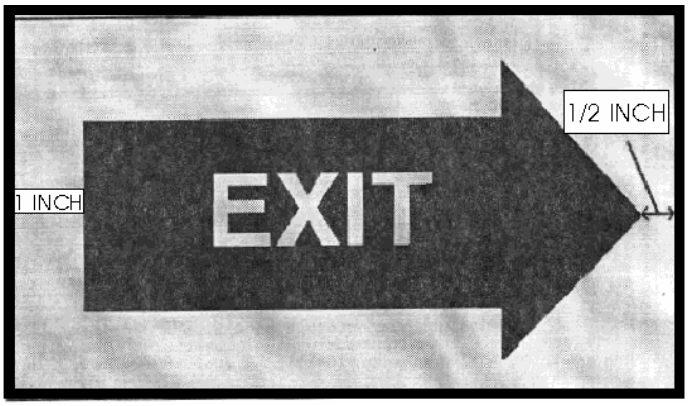

Figure 10-5: Exit Sign

(1) The exit sign background shall be made of photoluminescent material 6 inches in height and 8 inches in length.

(2) The arrow shall be black in color, approximately 6 inches in length and 3 inches in height. The arrow shall be placed on the background as shown in Figure 10-4.

(3) The word EXIT shall be made of 1 1/2 inch or 2 inch photoluminescent material.

(4) Exit signs/arrows are both right and left-handed. The arrow in Figure 10-4 is a right-handed directional arrow.

b. Doors And Scuttles: The outline of doors along primary egress routes shall be marked with a 2-inch border of ***photoluminescent*** material. Doors opening to the weather decks shall have the frame vice the door outlined. Scuttles with folding/roll up ladders and all access fittings leading out of machinery spaces shall be so marked. See figures 10-6 and 10-7 for examples.

Downloaded from http://www.everyspec.com

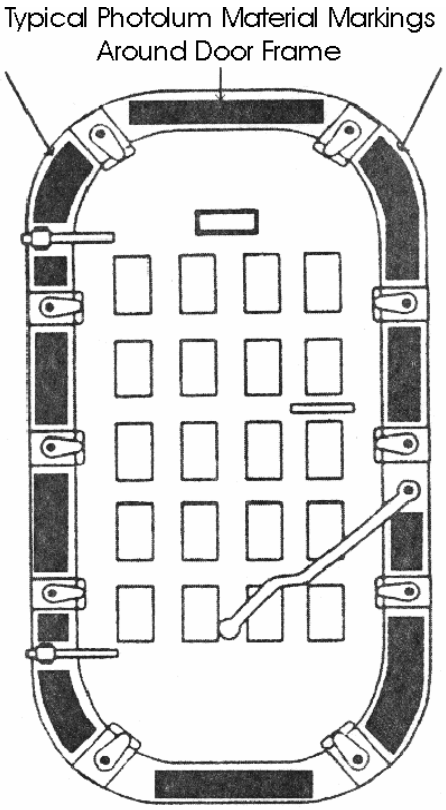

Figure 10-6: Typical Photoluminescent
Material Markings Around a Door Frame

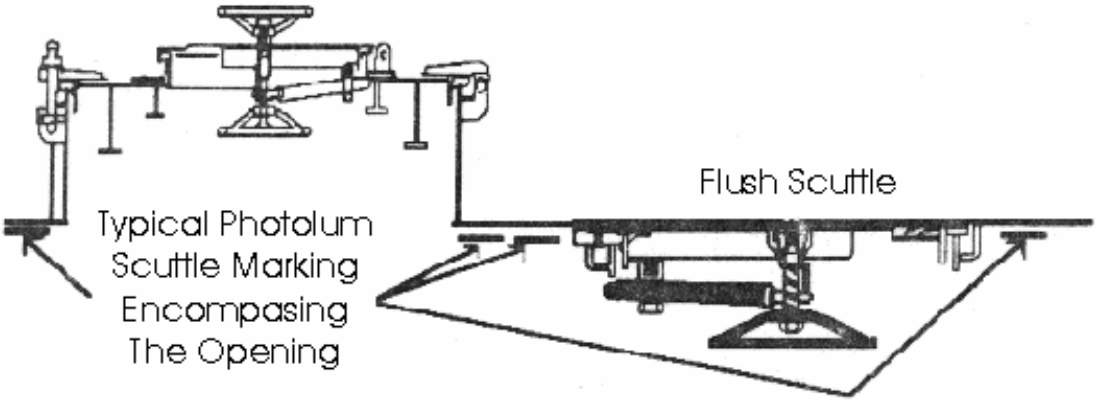

Figure 10-7: Typical Scuttle Photoluminescent Markings

c. Kickout Panels. On doors with kickout panels, the panel shall be outlined with 1-inch ***photoluminescent*** materials. The panels shall only be marked on one side of the door to reflect egress route identification.

Downloaded from http://www.everyspec.com

d. Vertical Ladders. The lower half of the ladders shall be marked with a 1 inch strip of ***photoluminescent*** material around the outboard edges of each ladder rung. See figure 10-8 for examples.

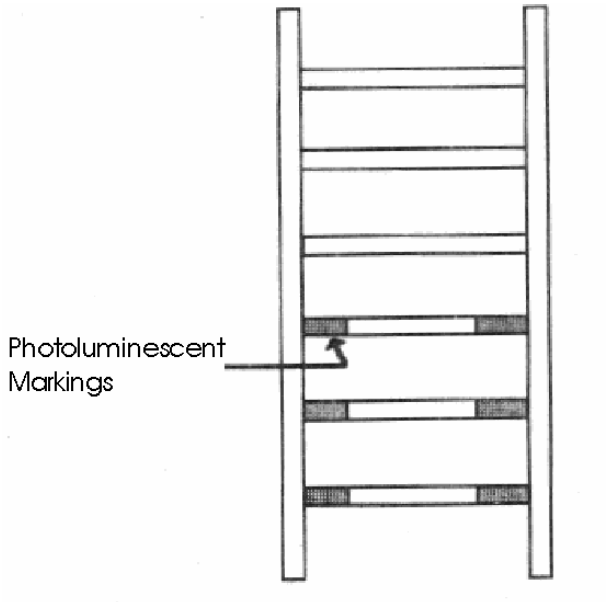

Figure 10-8: Typical Vertical Ladder Photoluminescent Markings

e. Inclined Ladders. The lower half of the ladders shall be marked with ***photoluminescent*** materials as follows; a 4 inch by 1 inch strip shall be placed on the outer side of the facing edge of each step and a 2 inch strip shall be placed on the outboard facing side of each ladder rail. See figure 10-9 for examples.

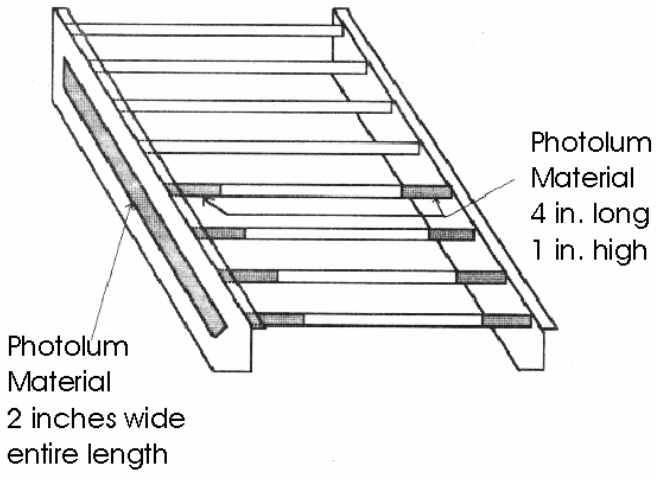

Figure 10-9: Typical Ladder Photoluminescent Markings

Downloaded from http://www.everyspec.com

This page left intentionally blank.

Downloaded from http://www.everyspec.com

CHAPTER 11. CUTTERS AND BOATS COLORS - EXTERIOR AND INTERIOR

A. General. This chapter presents the required colors for various exterior and interior areas/components of Coast Guard cutters and boats. The areas are listed in alphabetical order. The specified coating systems and requisition information are found in Appendices A through C. The cognizant MLC promulgated cutter or boat painting schedules take precedence over this chapter. In general, miscellaneous exterior objects whose colors are not specifically prescribed in the following paragraphs shall be painted the same color as the structures to which they are attached or adjacent. References are by paragraph heading and include:

1. Exterior Spaces.

   a. Anchors, Anchor Chains. (pg. 11-1)
   b. Antenna Hardware, Radio and Radar, DF Loops. (pg. 11-2)
   c. Boot-Top. (See Underwater Body/Boot-Top). (pg. 11-2)
   d. Electric Cables, Armored, Exterior. (pg. 11-2)
   e. Flight Deck. (pg. 11-2)
   f. Freeboard. (pg. 11-2)
   g. Machinery, Deck. (pg. 11-3)
   h. Masts. (pg. 11-3)
   i. Miscellaneous Details and Fittings. (pg. 11-4)
   j. Open Hulls, Cockpits and Cargo Space. (pg. 11-7)
   k. Ordnance Equipment. (pg. 11-7)
   l. Piping Systems. (pg. 11-7)
   m. Running Light Screens. (pg. 11-7)
   n. Smoke Stacks. (pg. 11-7)
   o. Spuds. (pg. 11-8)
   p. Superstructure. (pg. 11-8)
   q. Underwater Body/Boot-Top. (pg. 11-8)
   r. Weather Decks. (pg. 11-10)

2. Interior Spaces.

   a. Interior Colors - Epoxy. (pg. 11-10)
   b. Interior Colors - Fire Retardant Paint. (pg. 11-10)
   c. Miscellaneous Interior Spaces. (pg. 11-11)
   d. Piping Systems. (pg. 11-12)

B. Exterior Spaces.

1. Anchors, Anchor Chains. (See Appendix A, Anchors and Anchor Chain) Anchors stowed in the hawse shall be the color of the hull; white (17925), black (17038) or red (11105). Anchors stowed against the superstructure shall be, white (17925). Anchors stowed on deck shall be spar (10371). Anchor chain will be painted black (17038) with the exception of the depth markings. The detachable link between shots, excluding the detachable link for the 5 fathom connecting section, will be painted in the following pattern starting at the anchor end and working inboard, repeating the pattern as necessary:

   15 fathom, first shot detachable link, red (11105)
   30 fathom, second shot detachable link, white (17925)
   45 fathom, third shot detachable link, blue (15182)

   a. Additionally, the first link on each side of the 15 fathom detachable link shall be painted white (17925). The first link at each side of the detachable link shall also be marked by one turn of wire around the stud. The first two links on each side of the 30 fathom (second shot) detachable link shall be painted

Downloaded from http://www.everyspec.com

white (17925). The second link at each side of the detachable link shall also be marked by two turns of wire around the stud.

b. The same pattern of marking detachable links shall be continued up to the next to last inboard shot. All of the links in the next to last inboard shot shall be painted yellow (13538), and all of the links in the last inboard shot shall be painted red (11105).

2. Antenna Hardware, Radio and Radar, DF Loops. Do not paint radar waveguides, gaskets, contact points, insulators or rubber stock mounts. Wire or whip antennas may be painted white or black to enhance appearance of the cutter or boat. Top coat the antenna with a commercial grade of acrylic paint. Four inch wide red (11105) warning lines shall be painted on the deck to designate Radio Frequency Radiation Hazard Areas. Location of the warning lines will be found in a modification to the ship's drawings. Warning signs shall be posted where personnel enter the hazardous areas. Further guidance can be found in Electronics Manual, COMDTINST M10550.25 (series). Antennas are not to be painted with metallic based paints. If unsure, do not paint and refer painting maintenance to the supporting electronics facility.

TABLE 11-1: Antenna Hardware Colors

Hardware	Color
Direction Finder Stand and Loops	White (17925)
Radar	Match Mast Color
Whip Antennas	White (17925)
Antenna base (receive)	Blue (15182)
Antenna base (transmit)	Red (11105)
NOTE: Radio antennas may be painted black for aesthetic reasons. The manufacturers recommended coating should be used for this purpose. Usually, the recommended coating is a water based acrylic. Coatings with metallic pigment shall not be used on antennas.	

3. Boot-Top. (See Underwater Body/Boot-Top).

4. Electric Cables, Armored, Exterior. Paint in the color of the structure to which the cable is attached. Do not paint identification labels.

5. Flight Deck. All vessels with helicopter flight decks shall follow the instruction set forth in The Shipboard Helicopter Operational Procedures Manual, COMDTINST M3710.2 (series), Chapter 4, for proper marking and identification of this area.

6. Freeboard (See Table 11-2: Underwater Body, Boot-top, and Freeboard Colors). The freeboard coating system shall extend from the upper limit of the boot-topping, antifouling or underwater area to the top of the hull, bulwark, or sheer line, including all fittings.

Downloaded from http://www.everyspec.com

TABLE 11-2: Underwater Body, Boot-top, and Freeboard Colors

Vessel Class	U/W Body *	Boot Top *	Freeboard
BOATS/OTHER:			
14' Skiffs - ops on ice	Int'l Orange (12197)	Int'l Orange (12197)	Int'l Orange (12197)
ASB	Red (11105)	Black (17038)	Black (17038)
Barges	Red (11105)	Black (17038)	Black (17038)
Buoy Boats	Red (11105)	Black (17038)	Black (17038)
Flood Relief Punts	Int'l Orange (12197)	Int'l Orange (12197)	Int'l Orange (12197)
LCM	Black (17038)	Black (17038)	Black (17038)
LCVP	Red (11105)	Black (17038)	Black (17038)
Motor Lifeboats (44')	Red (11105)	Black (17038)	White (17925)
Motor Lifeboats (47')	Black (17038)	Black (17038)	No Coating
Motor Surf Boats	White (17925)	White (17925)	White (17925)
RB-M	Black 17038)	Black (17038)	No Coating
RB-S	Do not paint.		
TANB	Hull and freeboard no longer painted. Remove coatings in lieu of repainting.		
UTB/ATB	Black (17038)	Black (17038)	White (17925) **
CUTTERS:			
Black Hulls - WLB, WLM, WTGB, WLI, WLIC, WLR, WYTL	Red (11105)	Red (11105)	Black (17038)
White Hulls – WMSL, WHEC, WMSM, WMEC, WIX, WPC, WPB	Red (11105)	Black (17038)	White (17925) ***
Red Hull – WAGB, WLBB	Black (17038)	Black (17038)	Red (11105)

*Note: Many of the coatings specified for the boot-top/underwater body are not available in the FED-STD-595 color numbers listed. Use the color which best approximates the FED-STD-595 color number. For example, cuprous oxide-based antifouling coatings are not available in red. A red oxide (brownish red) would be used instead.

**Note: 41 UTBs that have had the paint removed from the freeboard are not required to repaint.

***Note: 170'/179' WPCs shall retain haze gray (26270) freeboard and superstructure.

7. Machinery, Deck. Winches, capstans, winch and capstan controllers, sounding machines and other deck machinery shall be painted as specified in Table 11-3: Miscellaneous Details and Fittings.

8. Masts.

   a. Masts, including ladders, crow's nests, platforms and their supports and foundations, shall be spar (10371). Equipment secured to the masts, such as pedestals, searchlights or bullhorns shall also be spar.

   b. Mast areas which are directly in the way of stack gases may be black (17038 or 37038). Areas on masts painted black when the vessel is commissioned will continue to be painted black in service. WAGB (399 ft), WHECs (378 ft.), WMECs (270 ft.) and WMECs (210 ft.) have black masts. Any extension of these areas beyond that originally authorized or the painting of additional areas black without authorization from Commandant (G-SEN) is prohibited.

Downloaded from http://www.everyspec.com

9. Miscellaneous Details and Fittings.

TABLE 11-3: Miscellaneous Details and Fittings

Item	**Color**
Aerial - Drop Pump Canisters	International Orange (12197)
Alarms, Chemical	Green (14260)
Alarms, Collision	Yellow (13538)
Alarms, Emergency, Fire and General	Red (11105)
Applicators	Red (11105)
Applicator nozzles	Polish
Awning Ridgepoles and Stanchions	White (17925)
Battle Lanterns	As manufactured or Yellow (13538)
Bitts, side, mounted on gunwales on harbor tugs	Black (17038)
Bitts, side, mounted on gunwales on seagoing tugs	Spar (10371)
Bitts, mooring and towing	Spar (10371)[3]
Blocks (except those in black areas on mast or stack)	Spar (10371)[1]
Blocks, in black area on mast or stack	Black (17038)[1]
Blocks, traveling or fall type, and related swivels and headache balls made of corrosion resistant material.	Painting not required; outline major component with Yellow, or Yellow/Black stripe safety tape/edging. Yellow (13538) if painted
Blocks, traveling or fall type, and related swivels and headache balls made of non-corrosion resistant material.	Yellow (13538); or Yellow (13538)/Black (17038) stripe; or Spar (10371) with Yellow/ Black stripe safety tape/edging for large blocks.
Boom Cradle	Spar (10371)[1]
Booms, boat	Spar (10371)
Boarding Ladders	Spar (10371)
Boarding Ladders, Wood	Do not paint. Coat with linseed oil.
Brightwork	Polish and coat with clear plastic or lacquer
Canvas or fabric covers, removable	No coating. Color of fabric to match color of item covered
Capstans [1]	Spar (10371)
Chocks, brass/bronze	Uncoated[3]
Chocks, bulwark	Bulwark color[1]
Chocks, except bulwark and roller type	Spar (10371)[1]
Chocks, Roller	Black (17038)[1]
Collars and Fixed Fendering	International Orange (12197) [5]
Compass Stands, except binnacle and bright work	White (17925), Optional Blue Grey (16099); Commanding Officer's Discretion
Cranes, Booms, and Frames	Spar (10371)
Davits, all type	Spar (10371)
Deck chests	White (17925)
Deck treads, Non Skid	No coating
Deck Machinery, controls and control stand, and equipment safety bumpers	Spar (10371)[1,2]
Diaphones	Spar (10371)

Downloaded from http://www.everyspec.com

TABLE 11-3 (Cont'd)

Dodgers, Canvas	Fabric color to be blue or white; Commanding Officer's Discretion
Dogs	Grease moving parts, do not Paint. Do not grease oil tight bearings, add oil if required.
Flag Staffs (on white hulls)	Spar (10371)
Flag Staffs (on black & red hulls)	Spar (10371)
Fire Pumps	Red (11105)
Firemain valves, (except threaded and machined parts)	Red (11105)
Flag lockers	White (17925)
Foam valves and outlets (AFFF)	1" wide diagonal stripes, approximately 45° alternating Red (11105) and Green (14062)
Fuel Can, P-100 pump	IAW NSTM 555-4.11.2.9.5.1. Units may deviate from NSTM by replacing Purple stripe with Yellow (13538) and replacing the word "JP-5" with "DIESEL" in Black (17038) letters.[4]
Fumetight Cover, P-100 pump	IAW NSTM 555-4.11.2.9.4. Units may deviate from NSTM by replacing Purple stripe with Yellow (13538) and replacing the text "WARNING JP-5/F-76 NO SMOKING" with "WARNING DIESEL FUEL NO SMOKING" in Black (17038) letters.[4]
Gangplanks, metal, except aluminum	White (17925)
Gangplanks, aluminum	No coating
Gasoline cans, portable	Red (11105)
Gasoline drums	Yellow (13538) with "GASOLINE" in Black (17038) letters
Gasoline storage racks	Color of bulkhead
Glare Reduction	See
Handrails and lifeline stanchions	White (17925)
Hatch coamings	Spar (10371)
Hatch covers	White (17925)
Hooks (boat davit, crane or cargo boom) and related swivels and headache balls; corrosion resistant material	Painting not required; outline major component with Yellow, or Yellow/Black stripe safety tape/edging. Yellow (13538) if painted.
Hooks (boat davit, crane or cargo boom) and related swivels and headache balls; other than corrosion resistant material	Yellow (13538); or Yellow (13538)/Black (17038) stripe
Hose racks, saddles and reels for fire hose	Red (11105)
Hull numbers and markings	See Chapter 12
Insulators, Electrical	No coating
Jack staffs (on white hulls)	Spar (10371)
Jack staffs (on black and red hulls)	Spar (10371)
Knife edges on watertight doors and hatches	Do not paint. Clean with aluminum oxide abrasive cloth, grit #320
Ladders, except those on masts	White (17925)
Ladders, leading from Buoy Deck	Black (17038)
Ladders, on masts	Spar (10371)

Downloaded from http://www.everyspec.com

TABLE 11-3 (Cont'd)

Leather coverings	Oil with preservative, neat's-foot 0-L-165
Name plates	No coating
Pelorus pedestals	White (17925)
Pilot House Visor, underside	White (17925) or Blue Grey (16099); Commanding Officer's Discretion
Probe, refueling	Black (17038)
Pump, gasoline powered	Yellow (13538)
Ready service lockers	White (17925)
Release mechanisms	Grease
Rigging, running	Lubricate per COMDTINST M9000.6 Chapter 613.
Rigging, standing	Lubricate per COMDTINST M9000.6 Chapter 613.
Searchlights, except on masts	White (17925)
Searchlights, on masts	Spar (10371)
Searchlight shutters	No coating
Sheaves	Block color or Spar (10371) [1]
Spray shield on bridge, inboard	White (17925) or Blue Grey (16099); Commanding Officer prerogative
Towing bitts See: Bitts, towing	
Towing rail (corrosion resistant material)	No coating
Turtle Back (distinct area adjacent to superstructure where cargo handling gear is attached to deck)	Black (17038)
Ventilators, all types, including gooseneck pipe vents, not attached or immediately adjacent to the superstructure	Spar (10371)

Notes:
[1] Working surfaces in contact with wire rope or synthetic lines may be coated with gray or green-gray Inorganic Zinc.
[2] Except that Ingersoll Rand TM standard air winches in use on WLIC/WLR platforms for spud or crossdeck winch service may be OEM factory applied black plasticized marine coating.
[3] 47' MLB and 41' UTB shall be bare aluminum
[4] With regard to P-100 pump markings, the CG allows deviation from NSTM because cutters do not always carry JP-5/F-76. The choice between following the NSTM or following the modified version provided in this Manual is at the discretion of the individual unit.
[5] Color may vary depending on construction material limitations.

9. Miscellaneous Details and Fittings (Cont'd). In general, miscellaneous objects whose color is not specifically prescribed elsewhere in these instructions shall be painted white (17925) if attached or immediately adjacent to some part of the superstructure that is also painted white. They shall be painted spar (10371) if attached or immediately adjacent to masts, spars, or other objects whose prescribed color is spar. Objects standing alone on the deck shall be spar. Stumbling hazards, such as deck padeyes, deck clips, and other projections, shall be painted white for better night visibility.

   a. LCMs and barges are exceptions and will have all miscellaneous objects painted black (17038).

   b. Refer to Table 3 for a list of miscellaneous objects most frequently encountered. The general rules shall be applied to objects not listed.

Downloaded from http://www.everyspec.com

c. At CO/OIC discretion, miscellaneous deck fittings/details, such as the inboard bow bulwark on icebreakers or the back side of the jack staff, may be painted flat black (37038) to reduce glare.

d. On newer vessels, first refer to the Vessel Painting Schedule. If not listed there, follow the miscellaneous painting instructions listed in this Section.

10. Open Hulls, Cockpits and Cargo Spaces. The exterior freeboard and boot top of open hulls are painted according to Table 2. The interiors of shipboard open hulls are painted spar (10371) and the interiors of all others are painted as follows: The inside of open hulls and the cockpits and cargo spaces of decked hulls shall be white (17925) down to the side seats or risers, or down to the cockpit deck, grating, or floorboards if there are no side seats or risers. UTLs will have blue gray (16099) decks unless these decks are of color-impregnated material. Blue-gray (16099) will be applied below the white including seats, thwarts, inside of hull, cockpit decks, gratings, floorboards or open bilges. Engine trunks not extending appreciably above the sheer line will be blue gray (16099) overall. This color scheme will apply to all boats except as noted below.

a. LCMs, Barges, and Buoy Boats will have the interior of their cargo spaces black (17038). Bulk barge storerooms will have a white (17925) overhead and bulkheads.

b. Flood Relief Punts and Ice Skiffs will have the entire interior, including hull, thwarts, floor boards, and bilges painted international orange (12197).

11. Ordnance Equipment. Interior and exterior surfaces of enclosed gun mount shields are to be painted white (17925). The interior gun mechanism and equipment shall be painted gray (16376). Gun barrels shall be painted black (27038). The foundations of all gun mounts, mortars, launchers, and gun directors shall be painted the same color as the deck on which they are mounted. All open gun mounts and mortars shall be painted black (27038). Close-in-Weapons System (CIWS) shall be maintained in the delivered preservation color. Super Rapid Blooming Outboard Chaff (SRBOC) launching systems shall be maintained in the delivered preservation color in accordance with NAVSEA Technical Manual SW393-AI-MMM-010/MK36/1-2. MK92 FCS CAS RADOMES shall be spray painted white (17925) with Silicone Alkyd Paint MIL-PRF-24635, Type II. Dry film thickness shall not exceed 6 mils total. Film thickness tolerance must be maintained to avoid interference with radar transmission.

a. Ready service lockers, pyrotechnic lockers, explosive lockers, and detonator lockers shall be painted white (17925) and conspicuously labeled with the content of each locker. The label shall be stenciled in red (11105) letters of the largest practical size.

b. Bulkheads and magazine overheads shall be painted white (27886). Magazine decks shall be painted blue gray (16099). Ammunition dredger hoists and their controllers shall be painted equipment gray (16376). Gun directors and all fire control equipment shall also be painted equipment gray.

12. Piping Systems. See interior piping systems, section 11.C.4 with Table 11-8.

13. Running Light Screens. Shall be painted black (37038).

14. Smoke Stack. Stack exteriors shall be painted spar (10371) with a black (17038) band around the top of the stack, unless otherwise authorized by the Commandant (G-SEN). The width of the band shall equal 1/2 the fore-and-aft diameter of the stack or 1/5 the height of the stack, whichever is smaller. If the stack has a hood, the hood shall also be painted black and will form an extension of the band. WHEC's (378 ft.) and WMEC's (270 ft. and 210 ft.) shall follow the Vessel Painting Schedule of a white (17925) stack with a black band.

15. Spuds. Shall be flat black (37038). A red (11105) 6 inch wide band shall be painted completely around the spud 6 feet from the top. This is to prevent personnel from lowering the spud too far. Further down the

Downloaded from http://www.everyspec.com

spud where the pin inserts, paint a red (11105) 6 inch wide band and above the red band paint a yellow (13538) 6 inch wide band. The yellow band will act as a warning and the red band will locate the pin hole so that the spud is not raised any higher.

16. Superstructure. The superstructure and all attachments secured, bracketed or adjacent to the superstructure shall be white (17925). This includes:

    a. Aircastles, in board and outboard
    b. Breakwaters
    c. Bridgewings
    d. Bulwarks, bulwark supports and brackets (bulwarks forming an extension of the hull shall be painted the hull color outboard. The inboard bow bulwark on icebreakers may be painted with dull black to cut glare).
    e. Cabins (where there is no distinct demarcation between vertical and horizontal surfaces, such as on the cabins of 44-ft motor lifeboats, white shall be used over the entire cabin).
    f. Canvas dodgers attached to superstructure, bulwarks or bridge wings (optional blue - CO prerogative; inboard side on the bridge may be painted blue gray (16099) to reduce glare).
    g. Deck houses
    h. Electrical conduits
    i. Engine trunks
    j. Gun shields
    k. Gun tubs
    l. Ladders
    m. Passageways, including overheads
    n. Pilothouses (underside of visor over pilothouse windows may be painted blue gray (16099) to reduce glare).
    o. Shelters, including overheads
    p. Spray shields (inboard side on the bridge may be painted blue gray (16099) to reduce glare).
    q. Stanchions
    r. Switch boxes
    s. Ventilation ducts

17. Underwater Body/Boot-Top. (See Table 11-2: Underwater Body, Boot-top, and Freeboard Colors).

    a. Underwater Body. The underwater body coating systems include the area from the bottom of the keel to the upper edge of the boot-topping. It also includes rudders, bilge keels, skegs, seachests and gratings. Use alternating colors for the different coats of anticorrosive (AC) epoxy paint and antifouling (AF) paint. Table 11-4 contains two recommended schemes.

Downloaded from http://www.everyspec.com

TABLE 11-4: Antifouling Paint Scheme					
Freeboard	Underwater Body (including Boot-Top)				Boot-Top Only
	AC 1st Coat	AC 2nd Coat	AF 3rd Coat	AF 4th Coat	AF 5th Coat
Black Hull	Red	Gray	Black	Red	Red
White Hull	Red	Gray	Black	Red	Black
Red Hull:					
Single Coat System	Black	-	-	-	-
Multi-Coat System	Gray	Red	-	-	Black

b. Boot-Top.

(1) Location of Lower Edge. The lower edge of the boot-topping shall be the light load waterline on all steel, aluminum and plastic vessels, and on wooden vessels where metal sheathing is installed in the boot-topping area. On all other wooden vessels, the lower edge of the boot-topping shall be the full-load waterline.

(2) Location of Upper Edge.

(a) For all vessels with a length of 150 feet or more, the upper edge of the boot-topping at amidships will be above the full-load waterline, a distance equal to one-eighth of the freeboard measured from the full-load waterline. The upper edge of the boot-topping at the bow will be above the full-load waterline, a distance 1.33 times the distance that the upper edge of the boot-top is above the full-load waterline at amidships. The upper edge of the boot-topping at the stern will be above the full-load waterline, a distance 0.66 times the distance that the upper edge of the boot-top is above the full-load waterline at amidships.

(b) For all vessels with a length of 65 feet or more but less than 150 feet, the upper edge of the boot-topping at amidships will be above the full-load waterline, a distance equal to one-sixth of the freeboard measured from the full-load waterline. The upper edge of the boot-topping at the bow will be above the full-load waterline, a distance 1.33 times the distance that the upper edge of the boot-top is above the full-load waterline at amidships. The upper edge of the boot-topping at the stern will be above the full-load waterline, a distance 0.66 times the distance that the upper edge of the boot-top is above the full-load waterline at amidships.

(c) For all vessels with a length less than 65 feet, the upper edge of the boot-topping at amidships will be above the full-load waterline, a distance equal to one-fourth of the freeboard measured from the full-load waterline. The upper edge of the boot-topping at the bow will be above the full-load waterline, a distance 2 times the distance that the upper edge of the boot-topping is above the full-load waterline at amidships. The upper edge of the boot-topping at the stern will be above the full-load waterline, a distance equal to the distance that the upper edge of the boot-top is above the full-load waterline at amidships.

(d) When the chines, rubbing rails or spray rails interfere with or lie close to the upper edge of the boot-topping, the upper edge of the boot-topping shall be adjusted the minimum amount to be parallel to and either completely above or completely below the chine, rubbing rails or spray rails.

(e) Contracting Officers may authorize some variation to the above criteria for newly

Downloaded from http://www.everyspec.com

constructed vessels. In general, they shall not be changed and the upper edge of the boot-topping shall be retained as originally applied. In all cases, the upper edge of the boot-topping shall be a fair and visually pleasing line from stem to stern.

18. Weather Decks. Weather decks may be painted with CG gloss dark gray (16099) or Navy flat dark gray (36076) with the exception of UTBs and MLBs which shall be bare aluminum with slip resistant sheets. Where there is a coaming at the deck edge, the deck paint will be extended up the inboard surface of the coaming. Deck paint shall also be applied to bounding angles between decks and superstructure or hatch coaming where superstructure and hatch coamings are welded to the deck. A dado of dark gray shall be applied to the vertical surfaces and shall not to exceed 12 inches in height. Waterways shall also be painted dark gray. Water tight door jams in the dado may be painted black to mask scuff marks. Buoy tender working decks should be gray (36231). Proprietary coatings authorized for use on buoy tender working decks may be green-gray in color. Red-gray colors are not authorized.

C. Interior Spaces.

1. Interior Colors - Epoxy (See Table 11-5). In all spaces requiring an epoxy as the topcoat, use a high build epoxy which approximates the following colors:

TABLE 11-5: Interior Colors – Epoxy

COLOR	FED STD 595
Black	27038
Dark Gray	26099
Gray	26270
Light Gray	26373
Green	24272
Red	20152
White	27886
Yellow	23594

2. Interior Colors - Fire Retardant Paint (See Table 11-6). All specifications shall include the requirements of this manual. All vessels shall use the coating systems in this manual for painting the vessel interior. In all spaces requiring fire retardant paint, colors are limited to those found in the Chlorinated Alkyd Fire Retardant Paint (DOD-E-24607) and Water Based Fire Retardant Paint (MIL-PRF-24596) specifications. This currently includes:

Downloaded from http://www.everyspec.com

TABLE 11-6: Interior Colors - Fire Retardant Paint	
COLOR	FED STD 595
Soft White	27880
Pastel Green	24585
Bulkhead Gray	26307
Beach Sand	22563
Rose Wood	22519
Clipper Blue	24516
Sun Glow	23697
Green Gray	26496
Yellow Gray	26400
Pearl Gray	26493
Pastel Blue	25526

Color Selection. The CO's and OIC's are authorized to select any color combination from the above list if it is not in conflict with the safety color code requirements found elsewhere in this manual. At CO/OIC discretion, miscellaneous interior details, such as the pilothouse overhead or bridge consoles, may be painted flat black (37038) to reduce glare

3. Miscellaneous Interior Spaces (See Table 11-7).

TABLE 11-7: Miscellaneous Interior Spaces				
Interior Space	1st Coat [1,2]	2nd Coat	3rd Coat	Topcoat [3]
Bilges and Cofferdams	Light Gray (26373)	-	-	Red (20152)
Bilges and Cofferdams – Optional color system to allow for easier inspection	Red (20152)			Light Gray (26373)
Bulkheads and Overheads, Uninsulated Aluminum	Green (24272)	-	-	Soft White (27880) or Pastel Green (24585)
Bulkheads and Overheads, Uninsulated Steel	Green (24272)	Light Gray (26373)	-	Soft White (27880) or Pastel Green (24585)
Bulkheads and Overheads, Uninsulated Metal-wet areas	Green (24272)	-	-	As required
Bulkheads and Overheads, Uninsulated Steel/Aluminum-appearance not a factor	Green (24272)	-	-	Gray (26270)
Chain Lockers	-	-	-	Gray (26270)
Condensation, Space Subjected to	Light Gray (26373)	Green (24272)	Light Gray (26373)	Soft White (27880) or Pastel Green (24585)
Deckplates, Steel/Aluminum (Bottom and edges)	-	-	-	Gray (26270)
Decks, Steel/Aluminum-wet areas	Green (24272)	-	-	Color as required
Decks, Steel/Aluminum-dry areas and non-skid	Green (24272)			Deck Red (10076) or Light Gray (16251)
Doors, Joiner	Green (24272)	-	-	Soft White (27880) or Pastel Green (24585)
Electric Cable, Armored	Green (24272)	-	-	Match adjacent bulkhead
Furniture and Galley Equip.	Green (24272)	-	-	Soft White (27880) or Pastel Green (24585)

Downloaded from http://www.everyspec.com

Table 11-7 (Cont.)				
Inaccessible Areas, Steel/Aluminum	Green (24272)	-	-	Gray (26270)
Insulation Surfaces, Fiberglass Sheet	-	-	-	Soft White (27880) or Pastel Green (24585)
Insulation Surfaces, Closed Cell PVC	White	-	-	White (Can be tinted to match adjacent bulkhead
Machinery, Operating Temp. < 200°F	Green (24272)	-	-	Gray (26307) or match OEM color
Machinery, Operating Temp. > 200°F	-	-	-	Aluminum
Piping, Insulated/Uninsulated < 200°F	-	-	-	See Next Section.
Piping, Uninsulated > 200°F	-	-	-	Aluminum
Tanks and Voids, General	Use appropriate system from MIL-PRF-23236 or Potable Water Tank Generic Category, as appropriate. Choose white as topcoat unless it is not manufactured in that color. Undercoats should be contrasting colors.			
Wood, Painted Interior	Green (24272)	-	-	Soft White (27880) or Pastel Green (24585)
Wood, Stained and Varnished Interior	Choose appropriate stain from list for Fed Spec TT-S-711			

Notes: [1] Mist coats are not included.

[2] Color of underlying primer coat(s) is not critical, however, each coat should provide color contrast to ensure complete coverage during application.

[3] Applies to final two coats of coatings such as DOD-E-24607 Chlorinated Alkyd and MIL-PRF-24596 Fire Retardant.

4. Piping Systems. All piping and valve bodies with the exception of that for oxygen and for firemains shall be painted to match adjacent bulkheads or overheads. Packing glands, valve stems, threads and similar working surfaces shall not be painted.

   a. Where feasible, all piping shall be marked to show the name of the service, destination and the direction of flow where practical.

   b. The name of the service and destination shall be painted on by stencil or hand lettering or by applying adhesive-backed tape, previously printed, stenciled or lettered. Lettering shall be one inch high for two inch or larger outside diameter bare pipe or insulation. For smaller sizes, lettering size may be reduced or label plates attached by wire or other suitable means.

   c. Direction of flow shall be indicated by an arrow three inches long pointing away from the lettering. For reversible flow, arrows are to be shown on each end of the lettering.

   d. Lettering and arrows shall be black except for dark colored pipe, including oxygen piping, for which they shall be white.

   e. Markings shall be applied to piping in conspicuous locations, preferably near control valves and at suitable intervals so that every line shall have at least one identification marking in each compartment through which it passes. Piping marking in cabins, officers' wardroom and messrooms, and warrant officers' messrooms is optional.

Downloaded from http://www.everyspec.com

f. Valves are marked by inscribing the rims of handwheels, by a circular label plate secured by the handwheel nut, or by label plates attached to the ship's structure or to the adjacent piping.

g. Piping system valve handwheels and operating levers shall be provided with a standardized color code identification for training and casualty control purposes.

TABLE 11-8: Piping System Identification Color Code

Piping Contents	Valve Handwheel/ Operating Lever	Fed Std 595 Color Number
Steam	White	(17925)
Potable Water	Dark Blue	(15044)
Nitrogen	Light Gray	(16376)
H.P. Air	Dark Gray	(16081)
L.P. Air	Tan	(10324)
Oxygen	Light Green	(14449)
Salt Water	Dark Green	(14062)
JP-5	Purple	(17142)
Fuel Oil/Gasoline	Yellow	(13538)
Lube Oil	Striped Yellow/Black	(13538)(17038)
Firemain & Plugs	Red	(11105)
AFFF (Foam)	Striped Red/Green	(11105)(14062)
Feedwater	Light Blue	(15200)
Hydraulic Fluid	Orange	(12246)
Refrigerants	Dark Purple	(17100)
Hydrogen	Chartreuse	(23814)
Cleaning Fluid	Brown	(10080)
Helium	Buff	(10371)
Helium/Oxygen	Striped Buff/Green	(10371)(14449)
Sewage	Gold	(17043)
Halon	Striped Gray/White	(16187)(17925)

h. Valve handwheels and operating levers may be painted with brush or spray. Paint these items with the same coatings used on the machinery which they are fastened to.

i. Oxygen pipes, including valve bodies, shall be light green (14449).

j. Firemain valves, magazine sprinkler valves and fire hose connections, except threaded parts, valve stems and other working parts, shall be painted red (11105). The remainder of firemain and sprinkler main piping system shall be painted to match the surrounding areas. Aluminum sprinkler piping in magazines area shall not be painted.

Downloaded from http://www.everyspec.com

This page left intentionally blank.

Downloaded from http://www.everyspec.com

CHAPTER 12. CUTTER AND BOAT IDENTIFICATION MARKINGS

A. General. All vessels and boats including boats assigned to cutters shall be identified by distinctive visual identification markings consisting of the Coast Guard emblem and diagonal stripes as well as numerals and letters. The DOT Graphics Standards Manual, DOT Order 1360.6, discusses the authorized display of the Coast Guard Emblem and stripes. U.S. Coast Guard Heraldry, COMDTINST M5200.14 (series) authorizes use of the Coast Guard Emblem and Seal. In rare cases, deviation from the prescribed use of the emblem, stripes and seal as well as other ship markings described by this Manual may be advantageous. However, any such change must be specifically approved by the acquisition program manager and facilities manager affected by the change. Copies of the request and approval shall be forwarded to Commandant (G-SEN) so that this Manual can be amended.

B. Markings.

1. Size, Style and Location. The size and location of all markings shall be in accordance with the detailed drawings of each individual class size and location of markings on nonstandard boats may be approximated from standard boat identification drawings.

2. Coast Guard Diagonal Stripes. The diagonal stripes are to be painted red (12199), blue (15182) and white (17925).

3. Color of Letters and Numerals. Black (17038) letters and numerals shall be used on white hulls and unpainted aluminum hulls. White (17925) letters and numerals shall be used on black and red hulls. Gold (17043) numerals shall be used on the vessel designated by Commandant (G-OCU) as Oldest Commissioned Cutter.

4. Official Number of Boats. The official number of all boats not assigned to named cutters or numbered floating units shall be placed on the stern of flat-sterned boats or on each quarter of round-sterned or double-ended boats in numerals of the same size as the numerals on the bow.

5. Station Name of Boats. All boats attached to shore facilities shall display their station name across the stern of flat-sterned boats or on each quarter of round-sterned or double-ended boats. The terms "station", "group" or "base" shall not be included with the geographical name. The station name lettering shall be approximately one-third the size of the boat numerals and located below the numerals. This ratio may be varied to improve appearance. In no case shall the station name lettering be larger than the boat number numerals.

6. Reserve Training Boats. The vessel identification markings of this section shall apply to Reserve Training boats.

7. Barges. Barges shall be identified in the same manner as described in paragraph 12.A.1. except that the prefix CGB shall be substituted for the prefix CG. Barges obtained from the Army or Navy on a loan basis shall retain their Army or Navy identification symbols unless otherwise directed by Commandant (G-SEN).

8. Boats Assigned To Named Cutters. In addition to the emblem and diagonal stripe, the markings on boats assigned to named cutters shall consist of an abbreviation of the name of the cutter to which the boat is assigned followed by a numeral. The abbreviation shall consist of the first three letters of the cutter's name. Starboard boats are assigned odd numbers starting forward and working aft. Where boats are stowed one above the other, the upper boat shall have the lowest number. When only one boat is carried by a cutter the number may be omitted.

Downloaded from http://www.everyspec.com

9. Boats Assigned To Numbered Units and Barges. In addition to the emblem and diagonal stripes, boats assigned to numbered floating units and barges shall be identified by placing the designating number of the unit, such as CG 63005, on both bows in 3 inch letters.

10. Miscellaneous Boats. When it is not feasible to use the emblem and diagonal stripes, boats shall be identified by the legend "U.S. COAST GUARD" in 3 inch letters. On inflatables, with or without ridged hulls, the lettering is located by putting the bottom of the letters on the centerline of the tube. The lettering is centered between the stem and stern. On ridged hull boats, the lettering is centered vertically on the sheer plank and located so that the beginning of the first letter is 4 inches from the stem. If possible, the lettering is applied in a manner which avoids plank seams.

11. Draft Figures. Draft figures on metal hulls will be made by running a bead of weld around the outline of the draft figures projected on the hull. Draft figures shall be located so that the bottom of the figure is even with the draft it represents measured from the bottom of the keel line extended. Draft figures shall conform to Coast Guard Plan No. FL-2804-15.

12. Limiting Draft Mark. Limiting draft marks are marks designating the maximum draft to which a vessel may be loaded. Commandant (G-SEN) will issue the letter of authorization which will locate the marks by stating the limiting draft, freeboard and frame number on which the mark will be centered. The mark shall be outlined with center punch marks or with a light bead of weld

13. Individual Ship Emblems. Individual ship emblems shall not be painted on, nor affixed to, the exterior of vessels. An emblem which is in keeping with the dignity of the service may be displayed at the quarterdeck or gangway.

    a. Requests for approval of ship emblems will be submitted to the district commander (dpa) or area commander, as appropriate, together with a replica of the emblem design in full color. Following approval, district commanders shall furnish a copy of the design to the program manager and facilities manager. The replica of the emblem design shall be an 8" x 10" photograph, drawing or other copy marked to indicate colors if not a colored replica.

    b. Direct liaison with the Institute of Heraldry, Department of the Army, is authorized to assist in the design or procurement of drawings and molds. Requests should be addressed to:

       Director
       U. S. Army Institute of Heraldry
       9325 Gunston Road (Rm S112)
       Fort Belvoir, VA 22060-5579
       (703) 806-4970

14. Commendation And Service Insignia. Display of commendation and service insignia is optional. When displayed, they will consist of replicas of the ribbons of the awards to which the vessel would be entitled under the same rules and regulations as prescribed in the Medals and Awards Manual, COMDTINST M1650.25 (series).

    a. Replicas of authorized operation and engagement stars as well as stars representing second and subsequent awards are authorized to be painted on the authorized ribbons.

    b. The sizes and locations designated in Table 12-1 shall be a guide for the ship types listed and shall be used as a general rule for ship types not listed. Where symmetrical arrangements permit, the painted replicas will be displayed on both sides of the vessel in corresponding locations, port and starboard.

    c. Painted replicas of commendation and service insignia shall be arranged in the same order as ribbons worn by personnel with a maximum of three replicas in a horizontal line.

Downloaded from http://www.everyspec.com

15. Cutter Achievement Awards. The requirements for visual display of cutter achievement awards such as the Engineering "E" or Damage Control "DC" can be found in Tab F to Appendix 23 to Annex C to COMLANTAREA SOP or Enclosure 4 to Tab B to Appendix 3 to Annex C to COMPACAREA SOP.

16. Controlled Substance Contraband Seizure Logos. The decision to display, or not to display such logos will remain a command prerogative. Those units desiring to display logos shall do so in accordance with contraband symbols approved by Commandant. Vessels with broken service/commission time (such as post MMA and FRAM cutters) may display all contraband decals earned since original Coast Guard commissioning. Display of these logos shall be as follows:

    a. Individual seizures may be symbolically displayed by a green marijuana leaf (or white snowflake) with a red "X" of equivalent size superimposed on it.

    b. Upon attainment of seizures totaling one million pounds of a single type contraband, the individual seizure logos contributing to this milestone shall be removed and replaced by a single double sized, gold logo with a superimposed red "X" of equivalent size.

    c. Size, location, composition, and color shading of symbols displayed shall remain at the unit CO/OINC's discretion, with the general guidance that their size be appropriate to the size of the displaying unit, and that the color shades chosen do not detract from mandated unit color schemes.

TABLE 12-1
Painted Replicas of Commendation and Service Insignia

Type Vessel	Insignia Size	Location
378' WHEC	5" wide x 18" long	Centered on outboard side of bridge wing bulwark both port and starboard
270' WMEC		Centered on outboard side of bridge wing bulwark 12" below top, forward of conning platform
210' WMEC		Centered on outboard side of bridge wing bulwark, 12" below top
110' WPB		Centered on superstructure 6" below the window

17. Ring Type Life Buoys. The vessel's name or number will be placed on the top semicircle of the ring. Place on the bottom semicircle the legend "U.S. COAST GUARD". Black letters 2 inches in height will be used. Retroreflective tape shall be applied as illustrated in the Rescue and Survival Systems Manual, COMDTINST M10470.10 (series).

18. Life Floats. Markings will always be placed on the longer legs of the raft. The vessel's name or number will be placed on one leg and the legend "U.S. COAST GUARD" will be placed on the other leg. The markings will be placed to be readily seen and placed so the vessel's name or the vessel's number shall be read first. Retroreflective tape shall be applied as specified in the Rescue and Survival Systems Manual, COMDTINST M10470.10 (series).

19. PFD's. On Navy standard vest-type PFD's the vessel's name or number will be placed across the middle of the back of the PFD in letters 3/4 inch in height. CG approved Type III PFD's shall be marked as specified in the Rescue and Survival Systems Manual, COMDTINST M10470.10 (series).

20. Wood Articles. Deck chests, boat boxes, oars, or other wood articles which may be washed overboard will have the vessel's name preceded by USCGC or designating number preceded by CG burned into the article in 1/2 inch letters to leave a clear impression.

Downloaded from http://www.everyspec.com

21. Radio Call Numbers. There is no longer a requirement for radio call numbers on the top of a vessels superstructure.

Downloaded from http://www.everyspec.com

CHAPTER 13. FACILITIES COLORS AND IDENTIFICATION

A. Exterior Colors. The following guidelines are established for choosing the colors or materials to be used in new construction and for maintaining older structures. For items not specified, colors should be selected to suit the intended use. Final appearance should not be extreme.

1. Shore unit structures. Shore unit structures include wood, stucco, and concrete dwellings. Such structures as outbuildings and quonset huts are included.

   a. White (17875) is the standard for most types of painted shore unit structures.

   b. Yellow (23613) is acceptable as an alternate for white in tropical regions or continuously snow covered northern sites where sunlight glare is to be reduced. Trim for yellow dwellings and buildings may be green (14159).

2. Trim.

   a. White (17875) is the prescribed trim color for red brick buildings: window sashes, storm doors and windows, gutters, eaves, doors, porch and stair balustrades. Lighthouses must be painted in accordance with the requirements of the Light List, Volumes I-VII, COMDTPUB P16502.1-7.

   b. Green (14159) Should be used for exterior trim, window sash, doors, shutters, wood lattice under porches, roof vents, weather vanes, storm doors and windows on white dwellings and buildings. It may also be specified for the trim on buildings used for such industrial purposes as bases and depots.

3. Flagpoles. Flagpoles should always be painted white (whether of wood or metal) unless the metal is corrosion resistant. Then, the flagpoles should not be painted.

4. Metal fences, metal railings, cranes, catwalks, ladders, lamp posts and wind instrument staffs. Should be painted green (14159). Ornamental iron may be painted black as an alternate.

5. Stationary Structures. Green (14159) should be applied to steel structures supporting water tanks. Untreated radio antenna poles and towers, flag towers, range light towers, storm warning towers, lookout towers, air tanks outside of buildings should also be green. Wood structures on towers should be white.

6. Steel Storage Tanks. Steel storage tanks (more than, 1,000 gallon capacity) should also be green (14159) and will have the name of the contents painted in large yellow letters on the exterior of the tank. However, small gasoline and diesel oil tanks should be painted yellow (13538) with black lettering.

7. Flammable Liquid Storage. Flammable liquid storage buildings or lockers shall be painted to be compatible with other buildings in the area with the contents labeled in large letters.

8. Structures Near Airfields. Must be painted international orange (12197) and white (17875) as required by Federal Aviation Administration (See FAA Advisory Circular "Obstruction Marking and Lighting," ACNO: 70/7460-1F, DTD 9/27/78. This is available from Superintendent of Documents, Government Printing Office, Washington, D.C.). Tall structures used as Aids to Navigation will be painted to conform to the Light List, Volumes I-VII COMDTPUB P16502.1-7, or as required by the FAA. For instructions on hangar roof markings at airfields, when so authorized, refer to the current Federal Aviation Agency "Air Marking Guide," available from the Federal Aviation Administration, Washington, D.C. For instructions on runway and taxiway markings, see FAA Advisory Circular "Marking of Paved Areas on Airports," ACNO 150/5340-10, DTD 1/19/73 available from the Federal Aviation Administration, Washington, D.C.

Downloaded from http://www.everyspec.com

9. Industrial buildings and warehouses. Industrial buildings and ware houses should be light gray (16251), particularly those located at bases and depots where white is impractical. It may also be used for painted chimneys. Green (14159) trim paint described above may be used on light gray industrial buildings. A commercial VOC compliant Aluminum Heat-Resistant Paint should be used for surfaces with high (above 300°F) temperature. Light gray should be used on all industrial traffic areas such as floors, stairs, ramps, and platforms, both interior and exterior.

10. Traffic areas. Traffic areas where maintenance is difficult, (such as floats, launching ramps, loading docks, and shop floors) should be medium gray (16187). In addition to being an alternate for light gray on traffic areas, medium gray shall be used for outdoor shore equipment such as winches.

11. Painted roofs. Painted roofs should be painted red (10076) to blend with the existing red roofs found at most Coast Guard units.

12. Structures requiring high visibility at long ranges. Should be painted international orange (12197). It gives high average visibility against a wide variety of sea and land backgrounds. It should be used with white for tall structures near air fields as required by the Federal Aviation Administration.

13. Lighthouse Structures. Should be painted as directed by the Light List, Volumes 1-VII, COMDTPUB P16502.1-7.

14. Colors. Items associated with Coast Guard facility activities have historically been blue and white. When this color combination is used to represent the Coast Guard the colors shall conform to blue (15123) and white (17875).

15. Antennas. Communications and ATON antennas shall be painted as follows:

Antenna base	
Receive	blue (15182)
Transmit	red (11105)
Fiberglass whip antennas	white (17875)
Towers:	
under 30m (100 ft)	white (17875)
over 30m (100 ft)	white/red in accordance with FAA rules

B. Interior Colors. Industrial areas shall be painted to follow existing area standards and the basic color combinations described in this chapter. Public areas in buildings (recreation areas, halls, corridors, mess deck, galley, office, lounges, heads) will follow the color scheme designated in the construction contract in all new buildings. In older buildings any change in color of these public areas from the previous standards needs approval of the District Commander or the Commanding Officer of a headquarters unit. Barracks areas now have a liberal choice of color and design subject to approval by the unit Commanding Officer.

1. Ceiling and Wall Colors. Federal Standard 595, Colors, lists those colors that are authorized for use. Federal color numbers beginning with a one are gloss. Semigloss colors begin with a two, and flat colors begin with a three. Gloss and semigloss paints are used on trim and on walls which require frequent scrubbing as well as areas with poor lighting. Flat paints are used on walls and ceiling when it is desirable to reduce glare.

   a. White (37875) and (27875) may be used for ceilings and overhead areas. Interior trim may be white or the same color as walls. White may produce glare but is good for storage spaces, closets, and locker rooms. White is also good for heads, galleys, pantries, sculleries, laundries, passageways and examining and treatment rooms at sick bay.

Downloaded from http://www.everyspec.com

b. Bone white (37886), ivory (37855) and a slightly darker shade of ivory (37778) are flat wall paints commonly used in office and living areas. Semigloss and gloss paints in the same colors or in darker compatible tones can be used on trim.

c. Yellow (23711) or (23695) may be used for passageways and stairways, living spaces, sleeping quarters, and large general offices. Yellow should not be used where difficult visual tasks are performed.

d. Yellow (12648) may be used for living spaces, sleeping quarters, mess halls, rest rooms, general offices and sick bays.

e. Gray (26440) may be used for living spaces, wardrooms, offices, classrooms, and laboratories. Gray give a subdued, non-distracting environment that is good for visual and mental tasks. Avoid gray in low-temperature climates.

f. Light green (24516) may be used for wardrooms, living spaces, sleeping quarters, mess halls, recreation rooms, offices, classrooms, laboratories and sick bays. Light green gives a cool, fresh and glare-free room. This color is suitable in most climates and in areas where personnel are concentrated.

g. Medium green (24277) is suitable for living rooms and mess halls, reception rooms, lounges and rest rooms. Medium green is usually not good for work areas except where dim lighting prevails.

h. Turquoise (25299) may be used for areas where a cheerful appearance is desired, i.e.: living quarters, wardrooms, lounges and recreation areas and mess halls. Turquoise can be distracting if used in offices, classrooms or work spaces.

i. Coral (21433) may be used in recreation rooms, lounges, living rooms and messing spaces. Coral is very bright and warm and should be used with restraint. More subdued colors should be used to complement it. Don't use coral in work or operational spaces.

2. Floor Colors. As a general rule, dark floors make a room look small and light colors make the room appear large.

a. Wood floors with a natural finish will be cleaned and protected with a floor wax rather than painted.

b. Floor paints are available in four standard colors: Light gray (16251), medium gray (16187), red (10076), and green (24172). Being practical and easy to maintain, light gray is the preferred finish for average floors. It may be used for sleeping quarters, offices, training areas and laboratories. The deeper medium gray may be used for industrial areas, workshops, garages, and boat houses. The red (10076) is prescribed for engine rooms, boiler rooms, furnace rooms, generator rooms and the floors of emergency power plants. Red or light gray may be used for passageways, mess halls, recreation areas, heads, and locker rooms. Green may be used as an alternate for light gray and may be applied to the floors of wardrooms, living quarters, sleeping rooms, first aid departments, and sick bays.

c. Concrete floors should not be painted unless painting is required to correct unsightly appearance.

d. For floor tiles, avoid dark or drab colors in favor of lighter tones of gray, green and tan.

e. For floor carpeting, nylon, acrylic, or olefin fibers are all practical and relatively low in cost. Nylon is also water-resistant and fire-retardant. Simple twist or tweed textures are recommended for use. Recommendations for carpeting color shall be submitted to the Commanding Officer or Officer in Charge of that unit for final approval.

Downloaded from http://www.everyspec.com

3. Industrial Area Colors. The following color guidelines apply to areas having relatively severe usage and to ships and industrial plants.

   a. White (27875) should be used on all ceilings, overheads, and concrete beams in industrial plants. The combination of white with turquoise (25299) is suitable in industrial areas where temperatures may be higher that normal and where lighting conditions are poor. This would apply to large shops and industrial interiors deprived of good, natural daylight or to areas with relatively weak artificial light. White and light gray (16251) combinations are used in relatively unimportant areas where occupancy is light and where difficult seeing tasks are not performed, (i.e. storage areas, stock rooms, furnace rooms, and emergency power rooms).

   b. Light green (24516) and medium green (24277) combinations are used for industrial facilities and workshops where personnel are concentrated, and for offices with heavy traffic. Light green has the proper reflectance for relief from glare and for ease of seeing, and it is restful and cool in quality. Medium green for trim will withstand abuse and simplify maintenance.

   c. Yellow (23695) and light gray (16251) combinations are used for areas deprived of good natural light or for windowless or below ground working spaces. This combination complements large workshops, boat houses, hangars, garages, darkrooms, and rigging shops.

4. Equipment Colors.

   a. In non-industrial facilities, fixed equipment against walls, such as cabinets, should be in the wall or trim color. Shelving, bins, racks, and movable equipment such tables, benches, and desks should be one standard color for the sake of uniformity.

   b. In industrial areas, fixed equipped against walls may be in trim color. Gray (16376) should be used as a standard for miscellaneous equipment such as benches, bins, racks, shelving, and wire screening. Where equipment is subject to severe usage, medium gray (16187) is a good alternate. Heated surfaces such as ovens, heat treating units, and metal boiler fronts should be painted with a heat-resistant aluminum paint. Insulated boilers should be white. Vent and exhaust ducts should be white if they run against the ceiling and can be kept relatively clean. If vent ducts extend down into the interior, that portion of duct below the ceiling should be painted light gray (16251).

5. Machinery Colors. New machinery with factory paint finish not matching the specified color shall not be repainted to these standard colors until wear of the original paint requires refinishing.

   a. Equipment gray (16376) is light tone which is the preferred finish for precision tools and machinery. Use it where high standards are expected and where a light rather than medium or deep finish will contribute to superior workmanship. This color is good for the machinery and equipment in precision machine shops, electronic shops, testing laboratories, and emergency power plants.

   b. Medium gray (16187) is good for general use in machine shops, carpenter shops, engine repair shops, erecting shops, boat repair shops, engine rooms, and compressor rooms. Medium gray may also be considered for engine blocks, frames and supports, and for coating the area under machinery on wood and concrete floors to seal the surface, prevent oil absorption and make cleaning easier.

6. Piping Identification.

   a. Colors. All piping (including valve bodies) not requiring color identification shall be painted to match adjacent bulkheads, walls, or overheads. Packing glands, valve stems, threads and similar working surface shall not be painted. Colors shall be in accordance with tables 11-13 and 12-17.

Downloaded from http://www.everyspec.com

(1) Firemain valves, magazine sprinkler valves and fire hose connections (except threaded parts, valve stems and other working surfaces) shall be painted in accordance with tables 11-13 and 12-17. The remainder of firemain and sprinkler main piping system shall be painted to match the surrounding areas. Aluminum sprinkler piping in magazines shall not be painted. Steel valve handles shall be painted gray (16376) unless otherwise specified.

(2) Identification of piping with color bands is not authorized for Coast Guard use.

b. Pipe Markings. Exact identification of piping to indicate contents or type of service is mandatory and accomplished by stenciled titles applied with black lettering. Use of stencils with standard size letters specified in Table 13-1. Titles should be stenciled on the two lower quarters of the pipe or covering. Titles shall be clearly visible from operating positions, especially those adjacent to control valves and each pipe line shall be identified at least once in each compartment. For pipe lines smaller than 3/4 inch in diameter, use securely fastened metal tags, with lettering etched or filled in with enamel. Titles shall be applied by use of upper case letters and Arabic numerals whenever applicable. Alternatively, engraved plastic plates of corresponding size may be used. Piping and tubing that is part of machinery (which are of such small sizes as to make lettering impractical) need not be included in this requirement. An arrow shall appear adjacent to each piping label to indicate the normal direction(s) of flow of materials in the system.

TABLE 13-1
Size of Lettering on Pipe

Outside diameter of pipe or, covering in inches	Size of stencil letters, in inches
1.5" or less	0.5"
1.5" to 3.5"	0.75"
3.5" to 6.0"	1.25"
6.0" to 9.0"	2.0"
9.0" to 13.0"	3.0"
over 13.0"	3.5"

7. Compressed Gas Cylinder Identification.

a. Colors. All compressed gas cylinders owned by the Coast Guard shall conform to the color code of MIL-STD-101B, Color Code for Compressed Gas Cylinders and Pipelines, except as permitted in this chapter.

b. Titles. Exact identification of any material contained in a compressed gas cylinder is mandatory and shall be made only by means of the printed title. The title shall appear in two locations on opposite sides of the cylinder and parallel to the longitudinal axis of the cylinder.

(1) On cylinders 4 in. in diameter and larger the title is printed in approximately 2 in. high letters. On cylinders less than 4 inches in diameter, the title may be smaller.

(2) Cylinders with background colors of yellow, orange, or spar shall have black letters. Cylinders having background colors of red, brown, black, blue, gray or green have white letters.

c. Cylinder Colors. The colors of the main portion of the body of cylinders are selected to group the materials conveniently into six classes of hazards. For further information refer to MIL-STD-101B for various chemicals in each class.

Downloaded from http://www.everyspec.com

Class	Color	Class of Materials
1	Yellow (13655)	Flammable materials
2	Brown (10080)	Toxic and poisonous materials
3	Blue (15102)	Anesthetics and harmful materials
4	Green (14187)	Oxidizing materials
5	Gray (16187)	Physically dangerous materials
6	Red (11105)	Fire protection materials

d. Decals. Two identifying decals may be applied on the shoulder of each cylinder. These decals should be placed on opposite sides and at right angles to the printed titles. They should include the title of the gas and the precautions for handling and use. The background color of the decal may or may not correspond to the cylinder color. Details on decals are listed in Naval Ships Technical Manual.

e. Other Markings.

(1) Shatterproof cylinders shall be stenciled with the phrase "NON-STAT" longitudinally and 90° from titles. Letters are black or white and approximately 1 inch in size.

(2) Empty compressed gas cylinders shall be marked with chalk.

8. Painting Gas Cylinders. To prevent corrosion, gas cylinders and fire extinguishers should be painted when empty prior to pressure testing. Full gas cylinders can be repainted by field units. However, surface preparation by chipping, hammering, power tool cleaning, heating and sandblasting are prohibited. Modifications to gas cylinders and fire extinguishers are also prohibited.

9. Electronic Equipment. In general, electronics equipment shall not be painted in the field. Minor touch ups of exposed surfaces may be made using the instructions provided in the equipment technical or service manual. Paint of original matching color shall be used. Information on the proper paint and color can be obtained from the manufacturer. In cases where the equipment requires complete repainting, arrangements shall be made with the servicing MLC Electronics Support Unit.

C. Colors For Safety. Colors for safety are in accordance with the General Industrial Standards 29 CFR paragraph 1910.144 Safety Code for Marking Physical Hazards. It is important to understand that safety colors are for functional purposes only, not for decoration. Particularly in industrial areas, their use shall hold practical meaning and shall be seen by personnel only where the distraction of color will provide a safeguard.

1. Red For Fire Protection. Red (11105) is standard for the identification of damage control and fire protection equipment. It shall be used for fire sheds, fire hydrants, fire alarm boxes, flooding valves on dry-docks, transmitting antenna hardware, outside connections to standpipes, and sprinkler lines (with the exception of aluminum magazine sprinkler lines). On the interiors of buildings, it shall be applied to fire carts, hose connections, and fire main valves. In painting fire main valves, the valve body, bonnet, and handle shall be painted. Valve stems and threads on the valve body shall not be painted. Sprinkler heads and fusible links shall not be painted. Areas behind fire fighting equipment on walls and columns shall be painted red. In order to facilitate location from a distance, 12 inch (or larger) bands or squares of red shall be applied directly above the equipment and about 12 feet from the floor. Such panels should be fully visible at a distance of 25 feet.

a. Extinguishers need not be repainted for the purpose of changing the color as supplied by the manufacturer. However, when they are painted, care must be taken to ensure that use, and hydrostatic test data are not obliterated. Hydrostatic test data shall be marked on extinguisher bodies in accordance with NFPA No. 10. For compressed gas cylinders and cartridges passing a hydrostatic test, the month and year shall be stamped into the cylinder in accordance with the requirement set forth by DOT. It is important that the stamping be placed only on the shoulder, top head, neck or footing of

Downloaded from http://www.everyspec.com

the cylinder. Extinguisher shells of the non-compressed gas types (that pass a hydrostatic test) shall have the test information recorded on a suitable metallic label or equally durable material. The label shall be affixed by a heatless process to the shell. These labels shall be self-destructive when removal from an extinguisher shell is attempted. The label shall include the month and year the test was performed, the test pressure used, and the name or initials of person performing the test. Extinguishers shall be marked for the class of fire on which they are to be used in accordance with NFPA No. 10, Appendix B, Portable Fire Extinguishers. This information can be obtained from the National Fire Protection Association, 470 Atlantic Avenue, Boston, MA 02210. To relate extinguisher types to classes fire, further symbols and color designations are recommended as follows:

(1) For Class A fires (wood, paper, rubbish, deep seated fires), an applicable extinguisher is a multipurpose dry chemical or water.

(2) For Class B fires (oil, gasoline and other flammable liquids which do no mix with water), applicable extinguishers are carbon dioxide, and dry chemical, or foam.

(3) For Class C fires (electrical equipment), applicable extinguishers are carbon dioxide and dry chemical.

(4) For Class D fires (metals such as titanium, magnesium, zirconium, sodium, potassium, etc.) normal extinguishing agents should not be used. Approved extinguishing agents are available in a dry powder form which may be applied with a scoop or shovel or with an extinguisher designed for dry powders.

b. Safety cans or other portable containers of flammable liquids having a flash point at or below 80°F, excluding shipping containers, shall be painted red (11105). The name of the product for which the container is to be used shall be conspicuously stenciled or painted on the can in yellow along with the word FLAMMABLE. Fifty-five gallon drums are not considered portable and are therefore painted yellow (13538) with black lettering. Manufacturer's paint need not be recoated to meet this color requirement so long as the original coating is in good condition.

c. Emergency stop bars or buttons on machinery shall be painted red.

d. Emergency circuit breakers or switches which are used for emergency shutdown of equipment or electrical circuits to a building or facility shall be painted red. The equipment or service controlled and the applicable voltages will be stenciled (or otherwise marked) in Yellow (13538) on the base of the breaker box if the equipment it controls is not otherwise evident, e.g. , "Lathe #1-220V".

2. <u>Yellow for Hazard Marking</u>.

a. For stumble and falling hazards, yellow (13538) is the accepted color used. Where suitable, alternate bands of black and yellow shall be used. Thus, yellow (or black and yellow) shall be applied to guard railings, curbing, the edges of platforms and pits, crane beams, pulleys, blocks, skids, and hand trucks, and to the bottom panel (or lower 12 in.) of roll up doors and the door edge moldings to a height of 5 ft. (inside and out). Large overhead crane beams in shops, however, may be gray (16251) with yellow (13538) applied to the crane cab to pulleys.

b. On stairways, yellow (13538) shall be applied in 4 inch bands immediately under the tread on top and bottom risers. Yellow shall also be used to mark the emergency gate that connects tanks in dry-docks.

c. Drums and storage tanks containing flammable liquids and gasoline-powered equipment shall be painted Yellow (13538), Aerial-Drop Pump Canisters (ADPC) shall be painted International Orange (12197).

3. <u>Orange For Hazard Marking</u>.

Downloaded from http://www.everyspec.com

a. Dangerous area should be painted orange (12197). Orange is standard for hazards which are likely to cut, crush, burn or shock personnel. Orange should be applied on or near dangerous parts: gears, shear, rollers of saws, planners, brakes, rolling and crushing devices, forming presses, punch presses, and riveting machines. Orange is desirable on the underside of guards over belts or gears in order to signal against carelessness by exposing a gaudy color to the eye. The exterior of such guards shall be gray.

b. Guards around hot pipes and exposed electrical wires and connections should be orange. Overhead electrical wires or rails for conveying and hoisting equipment after present a hazard which should be conspicuously marked with orange on adjacent beams, covers or supports. The inside of switch box doors and covers may be painted orange to reveal a vivid color and to encourage the proper closing of panel doors at all time.

4. Blue For Electrical Equipment.

a. Switch and fuse boxes, control panels, off-and-on control boxes on machinery, shall be blue (15123) in industrial areas. In personnel facilities and offices; however, electrical control panels may be in the wall color. The inside areas of such boxes should be colored brange (12197); use paint or colored decals.Air handling circuit breaker switches shall be painted with white (17875), non-conductive paint and a 1-1/2" diameter white dot shall be painted on the outside of the breaker box. Air handling equipment circuit breakers are typically automatically shut down during fire drills. Color coding will enable such circuit breakers to be easily identified and reset.

b. Electrical control mechanisms, receiving antenna hardware, electrical shore tie connections, welding gear, the control boxes of hoists, wenches, cranes shall be blue. Use blue as a background for signs with the lettering OUT OF SERVICE in marking equipment shut down for repair: elevators, boilers, ovens, tanks, pits, and scaffolding. The blue sign shall, be placed over controls and should not be removed except by an authorized person.

5. Green For First Aid. Green (14260) shall be used for the identification of first aid equipment. It shall be painted on first aid and medicine cabinets, stretcher boxes, cabinets for gas masks, safety showers, and for all signs relating to first aid and safety. To facilitate the location of safety devices, 12 inch green crosses shall be painted about 12 feet from the floor on walls and columns to be clearly seen from a distance. Green is also used for discharge valves on dry-docks.

6. Purple For Radiation Hazards. Ample protection must be provided against exposure to nuclear radiation type hazards. Such radiation, associated with radioactive isotopes, radiochemicals, fissionable materials, is invisible but may lead to severe injury. While the storage, packing, and handling of radiochemicals are well controlled by the Nuclear Regulatory Commission, all personnel must be safeguarded. The following code shall be applied in all facilities where radiation hazards exist:

a. Radiation areas and hazards shall be marked in accordance with the Code of Federal Regulations Title 10, Part 20, paragraphs 20.202 through 20.204. The three-bladed, propeller-shaped radiation symbol shall be purple (27142) on a ground of yellow (23538). The Code of Federal Regulations permits either magenta or purple for the symbol. Consequently, when the symbol is finished by others, it may be either color.

b. Special tags and labels shall be attached to all containers, receptacles, or storage areas, in order to caution against handling or entry. For further protection, the specific type of hazard should be described, together with any special instructions. Where necessary, special cautions to be observed can be lettered on or immediately adjacent to the radiation caution symbol.

Downloaded from http://www.everyspec.com

7. Aisle Marks. A good practice is to use aisle marks and lines to indicate traffic lines, parking locations and storage areas. White shall be used where floors are dark, and black where floors are light. Lines and marks around hazards or along pit and platform edges shall be yellow (13538).

8. Crane Control and Hooks. For standardization, crane control handles, corresponding hooks and lower blocks shall be painted according to the following color scheme, modified to individual installation:

Red	Port Vang
Green	Starboard Vang
White	Topping Lift
Yellow	Main Purchase
Orange	Relief Purchase

Downloaded from http://www.everyspec.com

This page left intentionally blank.

Downloaded from http://www.everyspec.com

CHAPTER 14. FACILITIES PAINTING SYSTEMS

A. Introduction. This section describes authorized coating systems required to finish and protect surfaces of buildings, facilities, and structures. It is organized by type of surface to be painted. Sections are provided for wood, metal, concrete and masonry, and other surfaces. Coast Guard specifications for painting new construction shall be prepared in accordance with Shore Facilities Standards Manual, COMDTINST M11012.9 (series) which describes Coast Guard Construction Guide Specifications. Restoration and preservation of old and historic properties must be accomplished in accordance with the National Historic Preservation Act and recent amendments. The law requires agency employees and contractors responsible for protection of historic buildings to meet professional standards developed by the Dept. of Interior.

WARNING

PERSONNEL INVOLVED IN THE APPLICATION OF PAINTS, PRIMERS, VARNISHES, OR SIMILAR TREATMENTS, OR THE PREPARATION OF SURFACES FOR THE APPLICATION OF PAINT OR PAINT PRODUCTS, SHALL BE FAMILIAR WITH THE CONTENTS OF CHAPTER 2 OF THIS MANUAL, THE INFORMATION CONTAINED ON ALL APPLICABLE MATERIAL SAFETY DATA SHEETS, AND COMDTINST M6260.2 (series), TECHNICAL GUIDE: PRACTICES FOR RESPIRATORY PROTECTION.

B. Tables.

Table 14-1a: Items not to be painted 14-3
Table 14-1: Exterior Wood 14-4
Table 14-2: Interior Wood 14-5
Table 14-3: Clear Finishes for Interior/Exterior Wood 14-6
Table 14-4: Exterior Metal Structures 14-7
Table 14-5: Interior Metal 14-11
Table 14-6: Metal Roofs 14-12
Table 14-7: Metal Machinery, Equipment and Furniture 14-13
Table 14-8: Interior and Exterior Metal Floors 14-13
Table 14-9: Piping 14-14
Table 14-10: Hot Metal Surfaces 14-14
Table 14-11: Water Storage Tanks 14-15
Table 14-12: Acid Resistant Metal Surfaces 14-16
Table 14-13: Submerged and Underground Steel Surfaces 14-16
Table 14-14: Exterior Concrete and Masonry 14-17
Table 14-15: Interior Concrete and Masonry 14-18
Table 14-16: Plaster and Wallboard 14-19
Table 14-17: Spaces Subject to Condensation 14-20

Downloaded from http://www.everyspec.com

C. Items Not Included In The Tables.

1. Storage Tanks - Fuel and Lube Oil. Fuel oil tanks and lube oil tanks at facilities must comply with federal and state regulations and should be maintained according to the manufacturers specifications. Certain offshore light station fuel storage tanks are designed to serve as basic structural members. The original construction contract requires the interior surfaces of these tanks to be painted with three coats of epoxy, the final coat to be white. Steel repair work on the inside of these tanks should be coated with the same system.

2. Towers, Antennas over 30 meters (100 ft). Towers which cannot be sandblasted will require special purpose commercial grade paint which is not available in the Federal Supply System. For information regarding paint selection, metal preparation, and paint schedules, consult the Civil Engineering Technical Report CG-ECV-1-82.

3. Air Conditioning and Evaporative Cooling Equipment. Only the metal casing or housing on packaged cooling equipment is to be painted. The type of equipment and environment will determine what paint system is required. Decorative paints may be applied over the finished coating, if desired.

4. Brightwork. Brightwork should be polished to a shiny surface with metal polish. Wipe off all excess polish. Painting or coating is not recommended. When continuous polishing is not practical, polish item to shiny surface, wipe off all excess polish, clean with solvent, and apply 3 coats of Interior/Exterior Brushing Lacquer TT-L-26. Purchase a commercial VOC compliant grade of Lacquer if required.

5. Mildew-Resistant (Fungi-Resistant) Paints. Mildew problems can be reduced by the addition of a mildewcide (fungicide) to latex paint. If alternate paints are recommended for the particular application, choose the more mildew-resistant paint from paints containing zinc oxide. Paints producing relatively hard films are more resistant to mildew (i.e. two component paints). Gloss enamels tend to reduce mildew. A mildewcide added to latex paints will reduce mildew. A number of chemical compounds are offered under various brand names as paint additives to combat mildew. They should be used in the concentration recommended by the manufacturer after determining that the mildewcide and paint are compatible. When painting in mildew problem areas, remove all mildew from the surface by washing with a mixture of water and liquid house hold bleach (commercial item description A-A-1427 Sodium Hypochlorite solution). Allow the surface to dry and then apply the mildew resistant paint. Mercury is not an authorized mildewcide.

6. Acoustic Tile. Avoid painting as long as possible because the paint will clog the openings and reduce the sound containment efficiency of the tiles. Apply one thin coat of Interior Latex TT-P-29 (250 g/l VOC), and brush it out to avoid clogging of the holes. A small amount of thinning with water will help to keep the holes from clogging.

7. Bituminous or Creosote Impregnated Surfaces. Surfaces coated with bituminous finishes or impregnated with creosote will bleed through when top coated. When required to be painted, apply two coats of Ready Mixed Aluminum Paint, TT-P-38 (VOC-520 g/l), and then top coat.

8. Fabric. Insulation on piping, ducts, and tanks often is covered with fabric. This does not require painting indoors but should be painted outdoors. Exposed exterior insulation may be preserved with a Canvas Coating Preservative, TT-P-595.

9. Glass. Do not paint glass unless absolutely necessary. If the glass must be painted, then paint the interior side using the same top coat as in the surrounding of the area.

Downloaded from http://www.everyspec.com

10. Plastic. Do not paint plastic unless absolutely necessary. If the plastic must be painted, sand to break the gloss, wash with Devoe 88 adhesion promoter (or equivalent) and apply a 1.0-2.0 mil tack coat of Formula 150 Epoxy-Polyamide MIL-P-24441 (VOC 295g/l). Top coat while the epoxy is still tacky. Since plastics vary considerably in composition, this procedure may not work every time. If failure is experienced, use the plastic manufacturer's recommended primer coat. Testing the paint on a sample or discussing the recommended coatings with the plastics manufacturer before painting can save a considerable amount of time.

D. Individual Item Painting Guidance.

Table 14-1a: Items Not To Be Painted

Item	Method of Treatment
Antenna Insulators	No Coating
Applicator Nozzles	Polish
Asbestos Cement Sheet Siding	No Coating
Bells, Bronze	Polish and Coat With Brushing Lacquer
Boatswain's Chairs	2 Coats of Boiled Linseed Oil
Bolts, Threaded Parts Exposed to Weather	Grease
Brick	No Coating
Brightwork (all types)	Polish
Canvas Covers, Removable	Canvas Preservative
Cedar Closet Linings	No Coating
Chain, Galvanized	No Coating
Composition Shingle Roof	No Coating
Concrete: Walls, Walks, Decks Roads, Previously Unpainted	No Coating
Creosoted Wood where appearance is not important, such as Telephone Poles, Antenna Masts, Dolphins, etc.	No Coating
Electric Insulators	No Coating
Fire Hose	No Coating
Fire Hose Nozzles	Polish
Floors, Industrial Shop, Marble and Terrazzo	No Coating
Floors, Resilient Tile or Linoleum	Wax or no Wax
Floors, Wood Block	No Coating
Floor Treads, Non-Skid	No Coating
Gaskets, Rubber, for Joints	No Coating
Gears, Exposed	Grease
Glands, Packing	No Coating
Gratings, Wood	2 Coats of Boiled Linseed Oil
Grease Cups	No Coating
Hose, All Types	No Coating

Downloaded from http://www.everyspec.com

Insulators	No Coating
Ladders, Portable, Wood	2 Coats of Boiled Linseed Oil
Leather Coverings	Leather Preservative
Mahogany and other fine wood paneling	Treat as Before
Markers, U.S. Geological Survey	No Coating
Name Plates	No Coating
Oil Cups	No Coating
Oil Holes	No Coating
Ordnance, working parts of	Polish or brushing Lacquer
Pavement	No Coating
Plaques	No Coating
Plumbing Fixtures, Plated	Polish
Porcelain Enamel Surfaces	No Coating
Slate Roofs	No Coating
Spark Proof Floors	No Coating
Stages	2 Coats of Boiled Linseed Oil
Tile, Rubber, Linoleum, Cork	Wax
Tile, Ceramic	No Coating
Valves: stems, glands, threaded and machined parts	No Coating

Table 14-1: Exterior Wood

Area: Exterior Wood	**Substrate**: Exterior Wood, Buildings, Trim, Shutters and Doors, Porches, Posts, Fences, and Towers.
Coating: Latex Paint.	**Preparation**: Prepare according to Chapter 5. Paint over freshly sanded or milled wood for best adhesion.
System, Minimum VOC Content: 2 coat, 2 mils MDFT, Exterior Wood Primer, TT-P-25 (VOC 250g/l). (For a Flat Finish) 2 coats, 2 mils MDFT each, Exterior Acrylic Emulsion Paint TT-P-19.	**System, VOC Compliant in Most Areas**: Same
Notes: For a gloss or semigloss latex or additional flat colors, purchase a suitable VOC compliant water based coating. Note: To stop bleed through from creosote etc., or make a vapor barrier, seal wood first with a commercial VOC compliant sealer.	**Alternate System**:
Area: Exterior Wood	**Substrate**: Exterior/Interior Wood Floors and Decks.

Downloaded from http://www.everyspec.com

Table 1: Exterior Wood (cont.)

Coating: Floor Enamel.	**Preparation**: Prepare according to Chapter 5. Paint over freshly sanded or milled wood for best adhesion.
System, Minimum VOC Content: Use a commercial, VOC compliant, floor enamel and sealer for VOC compliance.	**System, VOC Compliant in Most Areas**: Same
Notes: Wood members of wharves, pier ramps, and pilings are commercially pretreated with coal tar creosote, pentachlorophenol compounds (not permitted for marine use), ACA (ammoniacal copper arsenite), CCA (chromated copper arsenic), or acid copper chromate in accordance with Federal Specification TT-W-571. For specific details refer to COMDTINST M11000.11, Civil Engineering Manual. In cases where deck planking on piers has been previously painted, painting will be continued using the coating system specified in this table. Creosoted wood (when required to be painted or where bleeding is a problem) will be painted in after aging for 6 months.	**Alternate System**: 1 coat, 2-3 mils MDFT, Varnished Base Floor and Deck Enamel, TT-E-487 (458 g/l VOC), Thinned with 2/3 qt., Mineral Spirits Paint Thinner, TT-P-291, per Gallon of enamel. 2 coats, 2 mils MDFT each, Varnish Based Floor and Deck Enamel, TT-P-487 (458 g/l).

Table 14-2: Interior Wood

Area: Interior Wood	**Substrate**: Interior Wood - Trim molding, doors, walls, etc.
Coating: Latex.	**Preparation**: Prepare according to Chapter 5. Paint over freshly sanded or milled wood for best adhesion.
System, Minimum VOC Content: 1 coat, 1-2 mils DFT, Interior Latex Primer for Wood, TT-P-1984 (VOC 250 g/l). 2 coats, 1-2 mils DFT, Gloss or Semigloss Interior Latex, TT-P-1511 (VOC 250 g/l). For a flat finish use Flat Interior Latex, TT-P-29 (VOC 240 g/l).	**System, VOC Compliant in Most Areas**: Same
Notes: For a smoother finish on unpainted wood, apply several coats of primer and sand between coats. Usually water based products will soak into unpainted wood and raise the grain.	**Alternate System**:
Area: Interior Wood	**Substrate**: Interior Painted Floors and Decks.
Coating: Floor Enamel.	**Preparation**: Prepare according to Chapter 5. Paint over freshly sanded or milled wood for best adhesion.
System, Minimum VOC Content: Use a commercial, VOC compliant, water based sealer and floor enamel.	**System, VOC Compliant in Most Areas**: Same

Downloaded from http://www.everyspec.com

Table 2: Interior Wood (cont.)

Notes:	**Alternate System**: 1 coat, 2-3 mils MDFT, Varnished Base Floor and Deck Enamel, TT-E-487 (458 g/l VOC), Thinned with 2/3 qt., Mineral Spirits Paint Thinner, TT-P-291, per Gallon of enamel. 2 coats, 2 mils MDFT each, Varnish Based Floor and Deck Enamel, TT-P-487 (458 g/l).
Area: Interior Wood	**Substrate**: Exterior/Interior Wood ladders Boatswain's Chairs, Picnic Tables, Scaffolds, etc.
Coating: Clear Sealer / Boiled Linseed Oil.	**Preparation**: Scrub loose dirt & dry. See Chapter 5. Paint over freshly sanded or milled wood for best adhesion.
System, Minimum VOC Content: 3 coats of a commercially, VOC compliant, sealer.	**System, VOC Compliant in Most Areas**: Same
Notes:	**Alternate System**: 4 to 6 coats of Boiled Linseed Oil, TT-L-190. Recoat once a year and there after for exterior use. Allow 24 hours for drying.
Area: Interior Wood	**Substrate**: Exterior/Interior Hand Rails, boxes, etc.
Coating: Varnish / Spar Varnish.	**Preparation**: Dry, Dust Free. See Chapter 5. Paint over freshly sanded or milled wood for best adhesion.
System, Minimum VOC Content: 3 coats of a commercially available, VOC compliant, water based varnish. If a water based varnish is unavailable use a commercial, VOC compliant, oil based varnish.	**System, VOC Compliant in Most Areas**: Same
Notes:	**Alternate System**: 3 to 4 coats of Spar Varnish MIL-V-119. Allow 8 hours drying between coats. For best finish, sand between coats and allow 24 hours for drying.

Table 14-3: Clear Finishes for Interior/Exterior Wood

Area: Clear Finishes for Interior/Exterior Wood	**Substrate**: Interior Furniture
Coating: Lacquer.	**Preparation**: Dry, Dust Free. See Chapter 5. Paint over freshly sanded or milled wood for best adhesion.
System, Minimum VOC Content: 1 to 2 coats of a commercial, VOC compliant, water based wood stain as required. 2 to 3 coats of a commercial VOC compliant, water based lacquer or varnish.	**System, VOC Compliant in Most Areas**: Same

Downloaded from http://www.everyspec.com

Table 14-3: Clear Finishes for Interior/Exterior Wood

Notes:	**Alternate System**: 1 to 2 coats of Wood Stain MIL-S-711 (VOC 93%) as required 3 to 5 coats, Interior Spraying Lacquer, TT-L-58 (VOC 60-70%) or Interior /Exterior Brushing Lacquer, TT-L-26 (VOC 60-70%). Rub with pumice or sand lightly between coats.
Area: Clear Finishes for Interior/Exterior Wood	**Substrate**: Interior Floor
Coating: Varnish.	**Preparation**: Sand and remove dust. See Chapter 5. Paint over freshly sanded or milled wood for best adhesion.
System, Minimum VOC Content: 1 coat, commercial VOC compliant Filler. 2 coats, commercial VOC compliant Floor Sealer 2 coats, commercial VOC compliant Interior Floor Varnish	**System, VOC Compliant in Most Areas**: Same
Notes: Note Apply 1 coat of General Purpose Floor Wax, P-W-158 as a protective finish before the floor is used.	**Alternate System**: 1 coat, Wood Paste Filler, TT-F-366. 2 coats, Floor Sealer, TT-S-176 (VOC 520g/l), Class 1. Allow 3 hr., for drying between coats. 2 coats, Interior Floor Varnish, TT-V-71 (VOC 478g/l), Allow 24 hours drying between coats.

Table 4: Exterior Metal Structures

Area:	**Substrate**: Structural Iron and Steel for areas normally dry or occasionally wet with fresh water.
Coating: Lead/chromate free primer, Latex and Alkyd	**Preparation**: SSPC-SP 2 or SSPC-SP 3 or SSPC-11-87T. Hand or Power Tool Cleaning. (A commercial or near white metal blast surface preparation will extend coating life.) See Chapter 5.

Downloaded from http://www.everyspec.com

Table 14-4: Exterior Metal Structures (cont.)

System, Minimum VOC Content:	**System, VOC Compliant in Most Areas**:
Latex: 2 coats of a commercial, VOC compliant, water based exterior steel primer for sever environments. 2 coats of a commercial, VOC compliant, water based exterior acrylic latex for sever environments. Alkyd: 2 coats, 1-2 mils DFT, Alkyd Primer, TT-P-645 (VOC 340g/l). 2 coats, 1-2 mils DFT each Silicone Alkyd MIL-E-24635, Type III (VOC 275g/l) or Acrylic Enamel TT-E-2784 (VOC 250g/l). Epoxy: 1 coat, 5 mils MDFT, Epoxy-Polyamide Primer, MIL-P-24441, Formula 150, Type I, III or IV, (340g/l VOC). 1 coat, 5 mils MDFT, Epoxy-Polyamide, Haze Grey, MIL-P-24441, Formula 151, Type I, III or IV, (340g/l VOC). 2 coats, 1-2 mils DFT each Silicone Alkyd MIL-E-24635, Type III (VOC 275g/l) or Acrylic Enamel TT-E-2784 (VOC 250g/l). OR 2 Coats, 1-2 mils DFT, commercially available, VOC compliant, exterior waterbased latex or water based acrylic epoxy.	Same
Notes:	**Alternate System**:

Downloaded from http://www.everyspec.com

Table 14-4: Exterior Metal Structures (cont.)

Area: Exterior Metal Structures	**Substrate**: Structural iron and steel and worn galvanized (for severe service where corrosion is a problem).
Coating: Inorganic Zinc & Zinc Rich Epoxy.	**Preparation**: SSPC-SP 10, Near White Metal Blast, using MIL-A-22262, Type I Grit. Profile shall be 1.5-3.5 mils. See Chapter 5.
System, Minimum VOC Content: Inorganic Zinc: 1 coat, 3.0-4.0 mils DFT, Inorganic Zinc MIL-P-24648, Type I, Class I, Composition B (0 g/l VOC). 1 coat, 1-3 mils DFT, Epoxy-Polyamide Primer, MIL-P-24441, Formula 150, Type I, III or IV, (340g/l VOC) 2 coats, 1-2 mils DFT each Silicone Alkyd MIL-E-24635, Type III (VOC 275g/l) or Acrylic Enamel TT-E-2784 (VOC 250g/l). OR 2 Coats, 1-2 mils DFT, commercially available, VOC compliant, exterior water based latex. OR 1 coat 3 mils DFT water based acrylic epoxy. Zinc Rich: 1 coat 4-5 mils DFT each Zinc Rich Epoxy Primer, MIL-P-24648, Type II, Class B, Composition B. (VOC 340 g/l). 1 coat 3-5 mils Epoxy-Polyamide Primer MIL-P-24441, Formula 150, Type I, III or IV. 2 coats, 1-2 mils DFT each Silicone Alkyd MIL-E-24635, Type III (VOC 275g/l) or Acrylic Enamel TT-E-2784 (VOC 250g/l). OR 2 Coats, 1-2 mils DFT, commercially available, VOC compliant, exterior waterbased latex. OR 1 coat 3 mils DFT water based acrylic epoxy.	**System, VOC Compliant in Most Areas**: Same
Notes: Structures and Equipment which are maintained by Contractors may be top coated with a commercial, VOC compliant, Marine Grade Two Part Polyurethane for longest service life and best appearance. Because of the associated safety and health risk, Coast Guard personnel are not authorized to use this coating except as required elsewhere in this manual. Zinc Rich Epoxy may be applied over a hand tool cleaned surface or over a commercial blast. However, this will shorten service life.	**Alternate System**:

Downloaded from http://www.everyspec.com

Table 14-4: Exterior Metal Structures (cont.)

Area: Exterior Metal Structures	**Substrate**: Exterior nonferrous Metal: Stainless Steel, Galvanized Steel, and Aluminum.
Coating: Epoxy/Silicone Alkyd.	**Preparation**: For Stainless Steel, Blast with MIL-A-22262, Type I Grit. Profile shall be 3-4 mils for good adhesion. For Galvanized and Aluminum, brushblast with clean fine aluminum oxide, garnet or equivalent inert material for a 1.0-1.5 mil anchor pattern. Silica is prohibited. See Chapter 5.
System, Minimum VOC Content: 1 coat, 5 mils MDFT, Epoxy-Polyamide Primer, MIL-P-24441, Formula 150, Type I, III or IV, (340g/l VOC). 2 coats, 1-2 mils DFT each Silicone Alkyd MIL-E-24635, Type III (VOC 275g/l) or Acrylic Enamel TT-E-2784 (VOC 250g/l). OR 2 Coats, 1-2 mils DFT, commercially available, VOC compliant, exterior waterbased latex. OR 1 coat 3 mils DFT water based acrylic epoxy.	**System, VOC Compliant in Most Areas**:
Notes: Structures and Equipment which are maintained by Contractors may be top coated with a commercial, VOC compliant, Marine Grade Two Part Polyurethane for longest service life and best appearance. Because of the associated safety and health risk, Coast Guard personnel are not authorized to use this coating except as required elsewhere in this manual.	**Alternate System**:

Downloaded from http://www.everyspec.com

Table 14-5: Interior Metal

Area: Interior Metal	**Substrate**: General purpose, interior: steel
Coating: Lead and Chromate Free Primer: Latex, Alkyd & Epoxy.	**Preparation**: SSPC 3-63 or SSPC 11-87T. Power Tool Cleaning. See Chapter 5.
System, Minimum VOC Content: Latex: 2 coats, 1-2 mils DFT each, of a commercial, VOC compliant, Water Based Interior Primer for Metal. 2 coats, 1-2 mils DFT each, of a commercial, VOC compliant, Water Based Interior Gloss or Semigloss Latex for metal. Alkyd: 2 coats, 1-2 mils DFT each, Alkyd Primer, TT-P-645 (VOC 340g/l). 2 coats, 1-2 mils DFT each Silicone Alkyd MIL-E-24635, Type III (VOC 275g/l) or Acrylic Enamel TT-E-2784 (VOC 250g/l). Or 2 coats, 1-2 mils DFT each, commercial, VOC compliant, Interior Alkyd or Interior Latex. Epoxy: For sever service. 1 coat, 5 mils MDFT, Epoxy-Polyamide Primer, MIL-P-24441, Formula 150, Type III or IV (340g/l VOC). 1 coat, 5 mils MDFT, Epoxy-Polyamide, Haze Grey, MIL-P-24441, Formula 151, Type I, III or IV, (340g/l VOC). 2 coats, 1-2 mils DFT each Silicone Alkyd MIL-E-24635, Type III (VOC 275g/l) or Acrylic Enamel TT-E-2784 (VOC 250g/l). OR 2 Coats, 1-2 mils DFT, commercially available, VOC compliant, Interior Waterbased Latex or Water Based Epoxy.	**System, VOC Compliant in Most Areas**: Same
Notes: Surface prep for best service life is SSPC-SP 10, Near White Metal Blast, using MIL-A-22262, Type I Grit. Profile shall be 1.5-3.5 mils.	**Alternate System**:

Downloaded from http://www.everyspec.com

Table 14-5: Interior Metal (cont.)

Area: Interior Metal	**Substrate**: Interior Stainless Steel, Galvanized Steel, and Aluminum.
Coating: Epoxy / Latex, Epoxy or Alkyd Top Coat.	**Preparation**: For Stainless Steel, Blast with MIL-A-22262, Type I Grit. Profile shall be 3-4 mils for good adhesion. For Galvanized and Aluminum, Brushblast with clean fine aluminum oxide, garnet or equivalent inert material for a 1.0-1.5 mil anchor pattern. Silica is prohibited. See Chapter 5.
System, Minimum VOC Content: 1 coat, 3 mils DFT, Epoxy-Polyamide Primer, MIL-P-24441, Formula 150, Type I, III or IV, (340g/l VOC). 2 coats, 1-2 mils DFT each, Silicone Alkyd MIL-E-24635, Type III (VOC 275g/l) or Acrylic Enamel TT-E-2784 (VOC 250g/l). OR 2 Coats, 1-2 mils DFT, commercially available, VOC compliant, Interior Latex Top Coat for Metal . OR 1 coat 3 mils DFT Interior Water Based Epoxy Top Coat.	**System, VOC Compliant in Most Areas**: Same
Notes:	**Alternate System**:

Table 14-6: Metal Roofs

Area: Metal Roofs	**Substrate**: Steel.
Coating: Exterior Alkyd - Red.	**Preparation**: SSPC 2-63 or 3-63. Hand tool cleaning or power tool cleaning.
System, Minimum VOC Content: 1 coat, 2 mils MDFT, Exterior Alkyd Primer, TT-P-645 (340g/l VOC). 2 coats, 2 mils MDFT each, Red Roof and Barn Paint TT-P-31 (132g/l VOC).	**System, VOC Compliant in Most Areas**: Same
Notes: Copper and aluminum roofs should not be painted except to renew factory finishes	**Alternate System**:

Downloaded from http://www.everyspec.com

Table 14-7: Metal Machinery, Equipment and Furniture

Area: Metal Machinery, Equipment and Furniture	**Substrate**: Steel Machinery, Equipment, and Furniture.
Coating: Zinc Rich Epoxy/Alkyd, Latex or epoxy	**Preparation**: SSPC-SP 10, Near White Metal Blast, using MIL-A-22262, Type I Grit. Profile shall be 1.5-3.5 mils. See Chapter 5.
System, Minimum VOC Content: 1 coats 4-5 mils DFT Zinc Rich Epoxy Primer, MIL-P-24648, Type II, Class B, Composition B. (340g/l VOC). 1 coat 3-5 mils Epoxy-Polyamide Primer MIL-P-24441, Formula 150, Type I, III or IV. 2 coats, 1-2 mils DFT each Silicone Alkyd MIL-E-24635, Type III (275g/l VOC) or Acrylic Enamel TT-E-2784 (250 g/l). Or 2 Coats, 1-2 mils DFT, commercially available, VOC compliant, exterior water based latex. OR 1 coat 3 mils DFT water based acrylic epoxy.	**System, VOC Compliant in Most Areas**: Same
Notes: Aluminum furniture should not be painted. Except for safety markings, do not repaint equipment for the purpose of changing color.	**Alternate System**:

Table 14-8: Interior and Exterior Metal Floors

Area: Interior and Exterior Metal Floors	**Substrate**: Metal Floors
Coating: Zinc Rich Epoxy Primer / Alkyd, Latex and Epoxy Top Coat	**Preparation**: SSPC-SP 10, Near White Metal Blast, using MIL-A-22262, Type I Grit. Profile shall be 1.5-3.5 mils. Commercial Blast or Power Tool preparation may also be used; however, this will reduce service life.
System, Minimum VOC Content: Zinc Rich Epoxy: 1 coat 4-5 mils DFT, Zinc Rich Epoxy Primer, MIL-P-24648, Type II, Class B, Composition B. (340g/l VOC). 1 coat 3-5 mils Epoxy-Polyamide Primer MIL-P-24441, Formula 150, Type I, III or IV. 2 coats, 1-2 mils DFT each Silicone Alkyd MIL-E-24635, Type III (275g/l VOC) or Acrylic Enamel TT-E-2784 (250 g/l). Or 2 Coats, of a commercial, VOC compliant, exterior waterbased latex floor paint. Or 1 coat, of a commercial, water based epoxy floor paint.	**System, VOC Compliant in Most Areas**: Same
Notes: Nonskid properties may be added by spreading clean sand on the surface while tacky. Allow to dry and sweep off loose sand particles. Apply a very thin topcoat to avoid loosing the nonskid properties. Alternatively use one of the nonskid coatings from MIL-P-24667.	**Alternate System**:

Downloaded from http://www.everyspec.com

Table 14-9: Piping

Area: Piping	**Substrate**: Piping (insulated and uninsulated).
Coating: Latex/Alkyd	**Preparation**: SSPC-SP 6, Commercial Blast, using MIL-A-22262, Type I Grit. Profile shall be 1.5-3.5 mils. Power tool or hand tool cleaning may be used but will reduce life expectancy. See Chapter 5.
System, Minimum VOC Content: Latex: 2 coats of a commercial, VOC compliant, water based exterior steel primer for severe environments. 2 coats of a commercial, VOC compliant, water based exterior latex for severe environments. Alkyd: 2 coats, 1-2 mils DFT, Alkyd Primer, TT-P-645 (340g/l VOC). 2 coats, 1-2 mils DFT each Silicone Alkyd MIL-E-24635, Type III (275g/l VOC) or Acrylic Enamel TT-E-2784 (VOC 250g/l).	**System, VOC Compliant in Most Areas**: Same
Notes: Fabric covered insulation shall be given 2 coats of he same type paint used on surrounding surfaces. If pipe is uninsulated, topcoat with 2 coats of the same paint used on adjoining surface. Color coded pipe is topcoated with 2 coats, 2 mils MDFT each, TT-P-489 (420g/l VOC).	**Alternate System**:

Table 14-10: Hot Metal Surfaces

Area: Hot Metal Surfaces	**Substrate**: Hot Metal Surfaces (Interior & Exterior, operating temperatures above 300°F).
Coating: Aluminum	**Preparation**: SSPC-SP 6, Commercial Blast, using MIL-A-22262, Type I Grit. Profile shall be 1.5-3.5 mils. Power tool or hand tool cleaning may also may also be used but will provide reduced service life.
System, Minimum VOC Content: 2 coats, 1-2 mils DFT Each, commercial, VOC compliant, Aluminum Heat Resistant Paint.	**System, VOC Compliant in Most Areas**: Same
Notes: Where the surface is insulated, Heat-Resistant Paint should not be used unless the outer surface is above 300°F.	**Alternate System**:

Downloaded from http://www.everyspec.com

Table 14-11: Water Storage Tanks

Area: Water Storage Tanks	**Substrate**: Feed and Potable Water Tanks.
Coating: Epoxy (fresh water immersion).	**Preparation**: SSPC-SP 10, Near White Metal Blast, using MIL-A-22262, Type I Grit. Profile shall be 1.5-3.5 mils. See Chapter 5.
System, Minimum VOC Content: 1 coat, 3-5 mils DFT, Epoxy-Polyamide Primer, MIL-P-24441, Formula 150, Type I, III or IV, (340g/l VOC). 1 coat, 3-5 mils DFT, Epoxy-Polyamide, Red, MIL-P-24441, Formula 156, High Build Type III or IV (340g/l VOC). 1 coat, 3-5 mils DFT, Epoxy-Polyamide, White, MIL-P-24441, Formula 152, High Build, Type III or IV (340g/l VOC).	**System, VOC Compliant in Most Areas**: Same
Notes: If VOC compliant, Epoxy for Potable Water Tanks, MIL-P-24712 (340 g/l VOC) may be substituted for Epoxy-Polyamide, Type III or IV. Water will cause corrosion inside steel tanks and standpipes. This corrosion will not only destroy the tank but will affect the taste of potable water. Rust can also clog small pipelines, valves, and sprinkler heads. Always paint the inside surface of steel tanks and standpipes. Tanks should be emptied once a year, carefully inspected, and either spot painted or completely painted as necessary. Paints used for potable water must not contribute any disagreeable odor or taste to the stored water. After coating, tanks should be disinfected in accordance with the Water Supply and Waste Water Disposal Manual, COMDTINST M11300.2. For additional information, see the National Sanitation Foundation Standards (NSFS) 60 and 61. If potable water tank coatings require National Sanitation Federation certification, substitute a coating approved by the NSFS for the Military Specifications.	**Alternate System**:

Downloaded from http://www.everyspec.com

Table 14-12: Acid Resistant Metal Surfaces

Area: Acid Resistant Metal Surfaces	**Substrate**: Metal Surfaces Requiring Acid Resistance.
Coating: Chemically resistant tank coating	**Preparation**: SSPC-SP 10, Near White Metal Blast, using MIL-A-22262, Type I Grit. Profile shall be 1.5-3.5 mils. See Chapter 5.
System, Minimum VOC Content: 3 coats, 3-5 mils DFT each, MIL-P-23236, Type IV, (340g/l VOC).	**System, VOC Compliant in Most Areas**: Same
Notes: Users must select a tank coating which is chemically compatible with the acid(s) stored. This information will be found in the manufactures technical data sheets on chemical compatibility. If the QPL-23236 coatings does not have a good or excellent compatibility rating, then select a VOC compliant tank coating with superior properties.	**Alternate System**:

Table 14-13: Submerged and Underground Steel Surfaces

Area: Submerged and Underground Steel Surfaces	**Substrate**: Submerged or Underground Steel.
Coating: Powder Coating	**Preparation**: SSPC 10-63, Near White Metal Blast. See Chapter 5.
System, Minimum VOC Content: 1 coat 20-30 mils DFT Epoxy Powder Coating, MIL-C-24712, (0g/l VOC).	**System, VOC Compliant in Most Areas**: Same
Notes: Powdered Epoxy is a proven pipe line coating technology for underground and submerged service. The pipe or structural members are sand blasted then brought through an induction heater to raise the metal temperature to the melting point of plastic. The hot metal is then covered with statically charged powdered resin which melts in place without holidays. If it is impractical to use this technology then spray paint with alternate system. Submerged or underground steel requires a heavy duty barrier coat and appropriately designed anodic protection for normal service life. Inorganic Zinc MIL-P-24648, Type I, Class I, Composition B (0 g/l VOC) will also work for underground service with appropriate anodic protection.	**Alternate System**: 3 coats, 5 mils MDFT, Epoxy-Polyamide Primer, MIL-P-24441, Formula 150, Type I, III or IV, (340g/l VOC). OR Tank Coating, MIL-P-23236, (340g/l VOC) may be substituted for Mare Island if VOC compliant.

Downloaded from http://www.everyspec.com

Table 14-14: Exterior Concrete and Masonry

Area: Exterior Concrete and Masonry	**Substrate**: Exterior Concrete, Masonry Walls and Cinder Block.
Coating: Acrylic Latex.	**Preparation**: See Chapter 5.
System, Minimum VOC Content: Apply 1 coat of VOC compliant commercial block filler. Apply 2 coats, 1-2 mils DFT each, Exterior Acrylic Emulsion Paint, TT-P-19 (250g/l VOC). For Increased Durability. Apply 2 coats, 3-5 mils DFT each, of a commercial VOC compliant exterior water based epoxy for concrete & masonry. For UV Resistance and Graffiti Resistance. Top coat the Water Based Epoxy System with 2 coats of a commercial VOC Compliant Exterior Graffiti Resistant Two Part Polyurethane.	**System, VOC Compliant in Most Areas**: Same
Notes: Concrete and Masonry which are maintained by Contractors may be top coated with a commercial, Two Part Polyurethane for longest service life and best appearance. Because of the associated safety and health risk, Coast Guard personnel are not authorized to use this coating except as required else where in this manual.	**Alternate System**:
Area: Exterior Concrete and Masonry	**Substrate**: Cinder Block and Rough Texture
Coating: Acrylic Latex.	**Preparation**: See Chapter 5.
System, Minimum VOC Content: Mix and apply the following Grout coat: White Portland Cement, SS-C-192 , 9.4 Lb. Washed Silica (30-50) Mesh, 19.1 Lb. Potable Water, .85 Gal Acrylic Emulsion Paint, TT-P-19, 1.0 Gal (Use the same color as the topcoat. Mix by hand to keep the trapped air at a minimum. Add paint last and additional water if required, to reach a creamy consistency). Apply 2 coats, 2 mils MDFT each. Exterior Acrylic Emulsion Paint TT-P-19 (250g/l VOC).	**System, VOC Compliant in Most Areas**: Same
Notes:	**Alternate System**:

Downloaded from http://www.everyspec.com

Table 14-14: Exterior Concrete and Masonry (cont.)

Area: Exterior Concrete and Masonry	**Substrate**: Exterior Surfaces With Chalk Which Cannot be Removed.
Coating: Water based.	**Preparation**: See Chapter 5.
System, Minimum VOC Content: Apply 1 coat, 1-2 mils DFT, of a commercial VOC compliant Undercoat for Chalked Surfaces. Top coat with 2 mils MDFT, Exterior Acrylic Emulsion Paint, TT-P-19 (250g/l VOC).	**System, VOC Compliant in Most Areas**: Same
Notes:	**Alternate System**:
Area: Exterior Concrete and Masonry	**Substrate**: Exterior Concrete and Masonry Exposed To Wet and Humid Conditions, and Swimming Pools.
Coating: Various.	**Preparation**: See Chapter 5.
System, Minimum VOC Content: Concrete: 2 coats 5 mils DFT each of a commercial VOC compliant exterior waterbased epoxy for concrete. For Pools Top coat with a commercial VOC compliant pool coating.	**System, VOC Compliant in Most Areas**: Same
Notes:	**Alternate System**:

Table 14-15: Interior Concrete and Masonry

Area: Interior Concrete and Masonry	**Substrate**: Interior Concrete, Masonry and Cinder Block Walls.
Coating: Acrylic Latex.	**Preparation**: See Chapter 5.

Downloaded from http://www.everyspec.com

Table 14-15: Interior Concrete and Masonry (cont.)

System, Minimum VOC Content: For a flat finish Apply 2 coats, 1-2 mils DFT each, Interior Flat Acrylic Latex Paint, TT-P-29 (250 g/l VOC). Allow 24 hours drying between coats. For a gloss or semigloss finish Apply 2 coats, 1-2 mils DFT, Interior/Exterior Semigloss Acrylic Latex Paint TT-P-1511, (250 g/l VOC) or Acrylic Enamel TT-P-2784. If a Filler Coat Is Required, Apply - White Portland Cement, SS-C-192, 9.4 lb. Washed Silica (30-50) Mesh , 19.1 lb. Potable Water, .85 gal. Acrylic Emulsion Paint, TT-P-19, 1.0 gal. Use the same color as the top coat. Mix by hand to hold trapped air to a minimum. Add paint last and additional water if required to reach a creamy consistency. Apply 1 coat, 2 mils MDFT, Interior Flat Acrylic Latex Paint, TT-P-29 (250g/l VOC) Allow 24 hours drying between coats.	**System, VOC Compliant in Most Areas**: Same
Notes:	**Alternate System**:
Area: Interior Concrete and Masonry	**Substrate**: Interior Concrete, Masonry and Cinder Block Walls
Coating: Water based Epoxy for Durability.	**Preparation**: See Chapter 5.
System, Minimum VOC Content: 2 coats 3-5 mils DFT each of a commercial VOC compliant interior waterbased epoxy for concrete.	**System, VOC Compliant in Most Areas**: Same
Notes:	**Alternate System**:

Table 14-16: Plaster and Wallboard

Area: Plaster and Wallboard	**Substrate**: Drywall, Sheetrock, Gypsum Board, Fiberboard, Presswood, etc.
Coating: Acrylic Latex for normal applications	**Preparation**: See Chapter 5.
System, Minimum VOC Content: Apply 1 coat, 2 mils MDFT, Latex Drywall Primer, TT-P-650 (250g/l VOC). Allow 3 hours drying for recoat. For a flat finish Apply 1 coat, 2 mils MDFT, Interior Flat Acrylic Latex Paint, TT-P-29 (250g/l VOC), for light colors. Use TT-P-1728 (250g/l VOC), for deep tones. Allow 3 hours drying between coats. For a semigloss finish Apply 1 coat, 2 mils	**System, VOC Compliant in Most Areas**: Same

Downloaded from http://www.everyspec.com

MDFT, Interior/Exterior Semigloss Acrylic Latex Paint TT-P-1511, Type I. Allow 3 hours drying between recoats. For a gloss finish Apply 1 coat, 2 mils MDFT, Interior/Exterior Semigloss Acrylic Latex Paint TT-P-1511, Type II (250 g/l VOC) or Acrylic Enamel TT-E-2724 (VOC 250g/l). Allow 3 hours drying between recoats.	
Notes:	**Alternate System**:
Area: Plaster and Wallboard	**Substrate**: Plaster
Coating: Acrylic Latex	**Preparation**: See Chapter 5.
System, Minimum VOC Content: Apply 1 coat of a commercial water based VOC compliant Plaster Sealer Allow 24 hours drying for recoat. Apply Acrylic Latex topcoat as for drywall.	**System, VOC Compliant in Most Areas**: Same
Notes:	**Alternate System**:
Area: Plaster and Wallboard	**Substrate**: Wallboard and Plaster for severe service.
Coating: Epoxy	**Preparation**: See Chapter 5.
System, Minimum VOC Content: 2 Coats 3-5 mils DFT each of a Commercial VOC compliant Interior Water Based Epoxy.	**System, VOC Compliant in Most Areas**: Same
Notes:	**Alternate System**:

Table 14-17: Spaces Subject to Condensation

Area: Spaces Subject to Condensation	**Substrate**: Wood, Metal, Masonry.
Coating: Anti-sweat.	**Preparation**: Prepare as per instruction for substrate being painted. See Chapter 5.
System, Minimum VOC Content: Prime using the instructions for an alkyd or epoxy system applied to substrate being painted (i.e. wood, metal or masonry.) Apply a Commercial Industrial Grade, VOC compliant Anti-sweat Compound.	**System, VOC Compliant in Most Areas**: Same
Notes: Because of the expense in applying this system, it should not be used unless it is essential.	**Alternate System**:

Downloaded from http://www.everyspec.com

CHAPTER 15. FACILITIES SIGNS

A. Signs. Material selection is usually governed by durability, appearance and initial cost. Low initial cost may result in poor economy. On the other hand, high initial cost is not justified when damage or vandalism may necessitate frequent replacement of signs.

1. Sign Lettering. Letter sizes will necessarily depend upon the amount of wording and the amount of space available for the sign message. Table 15-1 shows the distances at which well proportioned letters of different heights can be read by persons of normal vision, under good lighting conditions.

Table 1: Sign Lettering

Distance Visible (Feet)	Height of Letters (Inches)
140	3.0
95	2.0
70	1.5
50	1.0
20	.5
12	.25
Note: As a general rule try to size the letters for the message involved and the attention desired. The distances listed are for black and white signs in good light conditions. Usually various other color combinations in low light conditions will have shorter visibility distances.	

2. Methods of Sign Preparation. Signs may be prepared by using freehand painting, stenciling, screen processing, or pressure sensitive overlays. Freehand painting should be done by qualified personnel only if the sign is not to be duplicated several times or if the sign is too large for preparation by other methods. Use stenciling methods if several copies are required or if qualified personnel are not available to produce the sign by freehand painting. Use screen processing when many copies are required. Pressure sensitive overlays are easiest to use because the lettering and common symbols are already prepared, and because light reflective materials can be used.

   a. Freehand Sign Painting. Hand letter the sign using artist's lettering brushes (Federal Specification H-B-118). For bulletin colors, use a mixture of equal parts of Boiled linseed Oil, and either turpentine or mineral spirits. Allow the lettering to dry completely before placing sign in service.

   b. Stenciling. Stenciling is a rapid means of preparing signs by the use of thin, nonporous material in which the lettering or design is cut, leaving openings through which the stencil paint can be transferred directly onto the sign.

   c. Screen Processing. Screen processing is a fast and economical method of making many copies in one or more colors. It should be done only by trained operators. Prints can be made on all surfaces which can be handled in the shop; namely, paper, wood, metal, hardboard, glass, plastic, and fabric. Also, various types of paint can be used such as oil colors, lacquers, and enamels which are specifically formulated to have the characteristics required for screen printing.

3. Pressure Sensitive Overlays. These are factory prepared letters, decals, emblems, numbers, symbols or standard signs with an adhesive backing. They are furnished in various sizes and colors. Overlays are applied to the sign or background surface by removing the backing and pressing the figures or entire sign into place.

Downloaded from http://www.everyspec.com

4. Reflective signs. Reflective signs provide the greatest degree of safety for both motorist and pedestrian during non-daylight hours; installations are encouraged to use reflective signs to the greatest extent practicable.

   a. Material. All reflective signs shall conform to the requirements of Federal Specification FP-79 published by the Federal Highway Administration. FP-79 provides requirements for reflective traffic sign materials (Section 633 and 718).

   b. Application Preparation. Pressure-sensitive adhesive sheeting material may be attached to any solid substrate. Aluminum may be used if degreased and etched. When applying overlay to in-place signs, surfaces shall be thoroughly cleaned and washed with detergent before installing overlay.

B. Safety And Warning Signs. These signs shall comply with 29 CFR General Industrial Standards paragraphs 1910.144 and 1910.145. Purchase these signs from the Coast Guard Supply Center. If not available, purchase signs commercially which conform to the American National Standards Institute (ANSI). Signs which conform to ANSI requirements will also conform to 29 CFR requirements. If it is impractical to purchase the sign, it can be constructed using the following guidelines:

1. White (17875) Lettering on Red (11105) will be used for fire regulation signs, regulations regarding cigarettes and matches, and warning signs as to explosives and flammable liquids.

2. Black lettering on Yellow (13538) will be used for danger and warning signs, such as "KEEP AWAY, MEN WORKING," also for floor load and clearance signs, and for all such cautioning instructions.

3. Black Lettering on White (17875) will be used for simple directional signs which direct traffic or provide office and department designations, names, and titles.

4. White (17875) lettering on Blue (15123) (or blue on white) may be used for signs not covered above. This would refer in general to operating instruction signs and to signs referring to current events.

5. Slow moving vehicle signs should meet the American Society of Agriculture Engineers requirements in ADAE R276 or ASAE R276.2.

C. Accident Prevention Signs. The Occupational Health and Safety Administration (OSHA) also specifies fire accident prevention signs which are required for Coast Guard use. They include:

Danger	black/white/red
Caution	black/yellow
Information	blue/white
Safety Information	green /white
Exit	red/white

D. Coast Guard Identification Signs. All Coast Guard units shall follow the sign format described in DOT Graphics Standards Manual, COMDTINST M5200.12 (series). All numerals, letters, and Coast Guard emblems are available in the form of decals and will be ordered under a Coast Guard contract with the UNICOR Federal Prison Industries Inc. COMDTINST 5030.11 (series) describes requirements for use of the Coast Guard seal and emblem.

1. Lettering or Numbering. All lettering or numbering other than applicable to DOT Graphics Standards Manual, COMDTINST M5200.12 (series), shall be in accordance with the respective drawings for that unit.

Downloaded from http://www.everyspec.com

2. Trail blazer signs, should be erected only when written agreement is obtained from responsible state, county, or city officials.

3. Exemptions. In rare cases, deviations from the prescribed use of the emblem, seal and slash might be advantageous. However, any such use must be specifically approved by the facilities manager and program manager. Approval is also required for applications to the exterior of a Coast Guard building.

E. Signs And Markers For Inactive Units. Active Unit Identification signs shall be removed as per Operating Facilities (OPFAC) of the U. S. Coast Guard, COMDTINST M5440.2 (series) when the unit is inactivated. Standard warning notices should be posted on such property. These notices are available in vitreous enamel signs at the Supply Center Curtis Bay. Sign Stock Numbers are CG-9905-286-7010 for 9"X20", and CG-9905-286-7013 for 10"X8".

F. Traffic Control Signs. Highway signs, traffic control devices, and pavement markings for any street or road under the jurisdiction of the Coast Guard shall conform to the standards contained in the Manual on Uniform Traffic Control Devices for Streets and Highways, ANSI-D6.1-1971, which may be obtained from the U. S. Government Printing Office under stock number 5001-0021. Overseas units are exempt from the requirements of the manual and should follow the markings of the country in which they are situated.

1. Highway Signs. Highway signs and accessories shall be procured from UNICOR Federal Prison Industries, Inc. or from commercial sources.

2. Pavement Markings. Traffic paints are applied on traffic bearing surfaces of airfield pavements, streets, highways, tunnels, bridges, and parking areas to direct and control traffic. Traffic paint markings help to control movement of pedestrians, as well as operations such as warehousing. These paints are also used to promote safety by marking safety zones, walkways, obstructions and other traffic and pedestrian control devices, and for the preparation of signs directly on pavements.

a. Surface Preparation. To obtain full service potential, marking paints must be firmly anchored to a thoroughly cured and clean substrate. Flexible pavements should be allowed to cure as long as practicable before marking paints are applied. This will prevent bleeding or undue softening of the asphalt by the paint. Careful attention must be given to cleaning and preparation of the surface. Before marking concrete pavements that have been cured with a membrane-type curing compound, remove the curing compound from the area to be painted by high pressure water blast cleaning. Make sure that the surfaces on which traffic paints are to be applied are dry and free of fuel, oil, grease, dirt, and loose or flaking paint. Follow applicable procedures listed in previous chapters depending on the substrate and environmental conditions.

b. Selection of Coatings. Highway Traffic Paint, TT-P-115 is for general use. Use Type I, Alkyd where relatively slow drying can be tolerated and bleeding is a problem, e.g., on bituminous pavements; Type II, Vinyl Toluene-Butadiene for fast drying where bleeding is a problem and Type III, Chlorinated Rubber Solids and Alkyd Resin for fast drying where bleeding is no problem. Black traffic Paint, TT-P-110, is used where black marking is desired as on light pavements or for yellow traffic markings when they are no longer desired. Be sure that paints and pigmented binders are well mixed before they are applied. If a line striping machine is to be used, test the paint in the machine. Add a small amount of appropriate solvent only if necessary to adjust viscosity for proper application. Purchase commercial VOC compliant traffic paint as required.

c. Application of Coatings. Take care to apply the correct amount of traffic paint to assure that the proper film thickness is obtained. Traffic marking paints are applied at thickness' above that of other paints in order to increase their life as the surface is worn by traffic. The usual range of wet film thickness is 14 to 16 mils which is equivalent to a spreading rate of 100 to 150 square feet per gallon. Traffic paints may be applied by brush, roller, or spray, but are usually applied by mechanical traffic line striping equipment.

Downloaded from http://www.everyspec.com

This page left intentionally blank.

Downloaded from http://www.everyspec.com

CHAPTER 16. PROTECTIVE COATINGS FOR AIDS TO NAVIGATION

A. Steel Ocean Buoys.

1. Introduction. Stricter environmental regulations have required the Coast Guard to identify new coatings for aids to navigation (ATON) maintenance which are low in volatile organic compounds (VOCs) and heavy metals such as lead and chromium. In addition, ever-tightening resource constraints dictate that new coatings provide as good or better long-term protection of our ATON hardware as the old system, and at a reasonable price. The new buoy coating system described in this chapter complies with these two requirements, and it replaces the old vinyl alkyd enamel/vinyl antifouling paints. The new paints meet current air quality and heavy metal restrictions, and they are off-the-shelf commercial products which have a long history of successful use in marine applications. However, these paints will not be the "final answer" for buoy maintenance. The coatings industry is very dynamic due to expected increases in environmental regulations, and the advance of technology is rapid. As promising new coatings come on the market, they will be evaluated for their potential as buoy coatings and further guidance will be promulgated accordingly.

2. Surface preparation.

   a. Removal of fouling. Servicing units shall remove the majority of fouling to the greatest extent possible before dropping buoys off at the shoreside buoy maintenance facilities. In particular, heavy fouling shall not be allowed to dry on the buoy. Dried fouling is very difficult to remove, and it creates a strong and unpleasant odor. Fouling may be removed by high-pressure water washing or by scraping. Special attention shall be given to removing the fouling from underneath the counterweights of flat-bottom lighted buoys, and from inside whistle tubes. Any remaining fouling shall be removed by the buoy maintenance facilities prior to blasting. If the fouling is light or tightly adhering, it may be removed by blasting.

   b. Removal of components. Components that could be damaged by blasting shall be removed from the buoy before blasting. Examples include signal equipment, bells, gongs, and whistles. In addition, vent valves shall be removed and the vent lines plugged.

   c. Removal of foreign material. Heavy accumulations of oil, grease, and dirt shall be removed from the buoy prior to blasting. Foreign material will become embedded in the steel during blasting, and will prevent the paint from sticking.

   d. Blasting methods and materials.

      (1) All exterior surfaces of the buoy hull, and the inside surfaces of whistle tubes and battery pockets, shall be blasted to near-white metal in accordance with Steel Structures Painting Council (SSPC) specification SSPC-SP-10. The steel cages shall also be blasted to near-white metal if they have the old vinyl paint system. The steel cages that have the new buoy coating system described in this chapter shall be blasted to near-white metal only if the coating is damaged or the steelwork requires repair.

      (2) Surface profile after blasting shall be 1.5 to 3.0 mils. The ablative system used will normally be steel shot or grit which contains no copper slag;garnet blasting grit is also acceptable. Sand or crystalline silica shall not be used. Other ablative materials may be used which can meet SSPC-SP-10, but should be reviewed by the cognizant MLC(kse) staff for health risks prior to use.

      (3) After blasting, the surface to be painted shall have the following characteristics: free of rust and scale except for slight shadows, streaks, or discolorations; free of blasting grit, weld spatter, and slag; free of old paint, oil, grease, and dirt. Guidance on the correct appearance of a surface

Downloaded from http://www.everyspec.com

blasted to near-white metal can be found in SSPC specification SSPC-VIS 1-89, "Visual Standard for Abrasive Blast Cleaned Steel."

3. Buoy coating system. The following guidance applies to shoreside painting in a buoy maintenance facility. Touch-up painting on station is discussed in paragraph 4 below.

   a. General. The buoy coating system consists of three components: a high-build epoxy primer, an ablative antifouling paint, and a marine-grade aliphatic polyurethane topcoat. The epoxy and ablative paints meet the stringent requirements for submerged service in accordance with MIL-P-24647. The polyurethane topcoat is the type commonly used on offshore rigs, bridges, and other exposed marine applications. The paints are commercial products available from a variety of manufacturers. However, they shall be applied as a complete system; i.e., all of the paints applied to a given buoy shall be from the same manufacturer. This is to provide compatibility between coats, validate the manufacturers' warranties, and ensure the Coast Guard receives adequate technical support to correct problems and increase productivity. The approved buoy coatings are described below and are listed in the tables at the end of this chapter.

   b. Application. Follow the manufacturer's instructions for correct application of the coating system. This includes complying with temperature, humidity, and dew point restrictions; storage, mixing, and induction time requirements; and specific requirements related to equipment and application techniques. All welding, machining, cutting, drilling, forming, or any other operation which would damage the coating system shall be performed prior to painting.

   c. Safety. Implement appropriate worker safety procedures for the application of the coating system, and ensure the procedures are strictly followed by the paint applicators. In particular, the new polyurethane coatings can cause severe allergic and asthma-like reactions if the proper safety precautions are not followed. Guidance on the safe application of polyurethanes is found in Polyurethane Coatings Exposure Control, COMDTINST 6260.30 (series). General questions on worker safety requirements can be directed to the cognizant MLC (kse) safety and environmental health staff, or to Commandant (G-WKS-2).

   d. Epoxy primer. All exterior steel surfaces, the exterior counterweights, and the inside surfaces of whistle tubes and battery pockets shall be coated with epoxy primer. Epoxy primer shall meet the requirements of MIL-P-24647, Type I, Class 1A, Grade A or B, Application 1 or 2, and shall be listed on the latest edition of QPL-24647. Apply by spraying two coats, 5 mils dry film thickness each, using contrasting colors for each coat. Sharp corners, edges, and other hard-to-coat areas shall be striped before each full coat is applied.

   e. Ablative antifouling paint. All exterior surfaces below the waterline and the inside surfaces of whistle tubes shall be coated with ablative antifouling paint. Ablative antifouling paint shall meet the requirements of MIL-P-24647, Type I, Class 1A, Grade A or B, Application 1 or 2, and shall be listed on the latest edition of QPL-24647. Apply by spraying two coats, 5 mils dry film thickness each, using contrasting colors for each coat. Sharp corners, edges, and other hard-to-coat areas shall be striped before each full coat is applied.

   f. Polyurethane topcoat. All exterior steel surfaces above the waterline shall be coated with a marine grade of acrylic aliphatic polyurethane. This paint shall meet the following requirements: 1) it shall be a commercial product from the same manufacturer that supplies the epoxy primer and ablative antifouling paints; 2) it shall have a VOC content of no more than 340 g/L (2.8 lb./gal), a lead content of less than 0.06% by weight, and a chromium content of less than 0.06% by weight. Apply by spraying one coat, 3 mils dry film thickness. Sharp corners, edges, and other hard-to-coat areas shall be striped before the full coat is applied.

Downloaded from http://www.everyspec.com

4. Coating repair on station. If buoys require touch-up painting while on station to maintain the daytime signal, a VOC-compliant polyurethane shall be used. Because of the long drying time involved, the polyurethane topcoat described in paragraph 3.f is not suitable for use on station. Instead, a moisture-cured polyurethane shall be used. It shall be suitable for use over the old vinyl coatings or the new polyurethane topcoat, it shall be immersible in under one hour, and it shall be suitable for brush or roller application in cold weather (20 degrees), wet conditions (99 percent humidity), and with no dew point restrictions. The known products meeting these requirements are approved for coating repair on station and are listed in the tables at the end of this chapter.

   a. Safety. The safety requirements of Polyurethane Coatings Exposure Control, COMDTINST 6260.30, including use of respiratory protection, necessary personal protective equipment, and required training, apply to this polyurethane touch-up paint, along with the following supplementary guidance:

      (1) When rolling or brushing polyurethane paint outdoors, personnel within 15 feet of the uncured coating shall be equipped with a half-face air purifying respirator with organic vapor cartridges.

      (2) TYVEK coveralls need not be worn when applying this moisture-cured polyurethane coating by roller or brush, but care shall be taken to avoid skin contact. However, the chemical resistant gloves required by Polyurethane Coatings Exposure Control, COMDTINST 6260.30, are still required during application of the coating.

      (3) When applying polyurethane coatings outdoors using a brush or roller, cordoning off a 100-foot area is not required. However, the number of personnel in the immediate vicinity of the painting shall be kept to a minimum.

   b. Surface preparation. Prepare the buoy surface by wire brushing, scraping, or high-pressure water washing to remove as much dirt, rust, guano, fouling, loose paint, grease, and salt as possible. If high-pressure water washing is used, follow the manufacturer's recommendations for a pressure setting that will clean the buoy thoroughly but will not damage the underlying coatings. The surface must be dry before painting. Wet surfaces shall be blown dry with compressed air or wiped off.

   c. Application. Follow the manufacturer's instructions for the correct application of this paint. Be aware that the paint reacts with the moisture in the air, and it will quickly start to cure (harden) once the can has been opened. To avoid wastage, take the following steps:

      (1) Keep cans sealed until ready for use.

      (2) Open the can, pour out only what you need for the job, cover the unused portion in the can with a thin layer of thinner, re-seal the can.

      (3) Do not allow rain, mist, or water to mix with the paint.

   d. Drying Time. The moisture-cured polyurethane can generally be immersed (the buoy can be re-deployed) within 1/2 hour to 1 hour after painting, depending on temperature. The paint cures slower in cooler temperatures. It is possible to reduce this time by adding accelerator. Follow the manufacturer's instructions for mixing and other application requirements.

B. River Buoys. Maintenance painting of these buoys is generally not required or recommended. However, if it is felt that touch-up painting is needed to maintain the daytime signal, the moisture-cured polyurethane described in section A, paragraph 4 of this chapter may be used. Another alternative would be an industrial-grade acrylic latex paint. Such paints are available "off the shelf" from a variety of commercial sources (two examples would be "DTM Acrylic" from the Sherwin-Williams-Company, or "Amercoat 220" from Ameron International). However, this type of paint has a much shorter color life than polyurethane, and it requires low humidity, warm temperatures, and a long drying time to cure properly. This limits its usefulness as an on-station touch-up paint,

Downloaded from http://www.everyspec.com

although it may be suitable for shoreside application. Contact Commandant (G-SEC-2B) for additional guidance before using this type of paint.

C. Foam Buoys. Maintenance painting of these buoys is not required or recommended. However, on the 5x9LFR, if it is felt that the tower requires touch-up painting to maintain the daytime signal, use the moisture-cured polyurethane described in section A, paragraph 4 of this chapter.

D. Plastic Buoys. Maintenance painting of these buoys is not required or recommended.

E. Minor Fixed Aids To Navigation.

1. General. Coating of fixed structures depends on the material from which they are constructed, the daytime signal required, and whether the painting will be done at a shoreside maintenance (or contractor) facility or on-site.

   a. Steel structures. The coatings and surface preparation methods described in section A of this chapter are suitable for use on steel structures which require corrosion protection or a daytime color signal. Structures made of galvanized steel or stainless steel need not be coated, unless a daytime color signal is required. If touch-up painting of the color coat is required on station, use the VOC compliant moisture-cured polyurethane described in section A, paragraph 4 of this chapter.

   b. Aluminum structures. Aluminum structures and their components are to be left unpainted.

   c. Wood, concrete, and masonry structures. See chapter 14.

Downloaded from http://www.everyspec.com

APPROVED COATINGS FOR AIDS TO NAVIGATION

Shoreside maintenance painting. As of this writing, there are three companies whose products meet the requirements for shoreside buoy maintenance painting: Ameron, International, and Hempel.A fourth company, Sherwin-Williams, is licensed to supply Hemple products under their own brand name. The approved products from each of these companies are listed in Tables 16-1, 16-2, 16-2(a), and 16-3. Note that the epoxies are designated as "summer grade" and "winter grade." The "winter grade" is formulated to cure properly in colder temperatures than the "summer grade." Consult the manufacturer's literature for specific application instructions.

Touch-up painting on station. As of this writing, there are two companies whose products meet the requirements for buoy touch-up painting on station: Wasser and Xymax. The approved products from these companies are listed in Tables 16-4 and 16-5. These paints are available in gloss and semigloss versions - either type is acceptable for touch-up painting.

Procurement guidelines. With the exception of the polyurethane topcoat paint, all of these products are available through the GSA Supply System (NSNs are provided in the tables). They can also be purchased directly from the manufacturer, or from one of the manufacturer's authorized distributors. Phone numbers and addresses for each of the companies are included on the tables.

Downloaded from http://www.everyspec.com

TABLE 16-1 AMERON PRODUCTS

(Shoreside Maintenance Painting)

Paint Type	**Product Name**	**NSN**	**Color**
Epoxy			
"Summer Grade":	Devran 230	8010-01-270-8161	Red
	Devran 230	8010-01-419-2430	Gray
	-or-		
"Winter Grade":	Bar-Rust 235	8010-01-316-6741	Red
	Bar-Rust 235	8010-01-316-6020	Black
	Bar-Rust 235	8010-01-419-2433	Gray
	Bar-Rust 235	8010-01-359-7235	Haze Gray
	Bar-Rust-235	8010-01-359-7234	Buff
Ablative	ABC #3	8010-01-211-4815	Red
	ABC #3	8010-01-210-7813	Black
Epoxy and ablative thinner	T-10	8010-01-272-3208	
Polyurethane	Devthane 379	Commercial Sources	Federal Color Numbers:
	-or-		Red (11350)
	Amershield		Green (14193)
			Yellow (13655)
			Orange (12197)
			Blue (15182)
			White (17875)
			Black (17038)

Company Info:

Ameron International
Protective Coatings Group
201 North Berry Street
Brea, CA 92922
1-800-411-2528

Downloaded from http://www.everyspec.com

TABLE 16-2 HEMPEL PRODUCTS

(Shoreside Maintenance Painting)

Paint Type	**Product Name**	**NSN**	**Color**
Epoxy			
"Summer Grade":	Hempadur 4515-5063	8010-01-419-2431	Red
	Hempadur 4515-1148	8010-01-419-2434	Gray
	-or-		
"Winter Grade":	Hempadur 4514-5063	8010-01-419-2427	Red
	Hempadur 4514-1148	8010-01-419-2432	Gray
Epoxy Thinner	0846	8010-01-419-2436	
Ablative	Olympic 7660-5111	8010-01-419-2435	Red
	Olympic 7660-1999	8010-01-419-2428	Black
Ablative thinner	0808B	8010-01-419-2429	
Polyurethane	Hempel's Urethane 5595U	Commercial Sources	Federal Color Numbers:
			Red (11350)
			Green (14193)
			Yellow (13655)
			Orange (12197)
			Blue (15182)
			White (17875)
			Black (17038)

Company Info:

Hempel Coatings (USA), Inc.
6901 Cavalcade
Houston, TX 77028
1-800-678-6641

Downloaded from http://www.everyspec.com

TABLE 16-2(a) SHERWIN-WILLIAMS PRODUCTS

(Shoreside Maintenance Painting)

NOTE: The epoxy and ablative paints listed below are Hempel paints which Sherwin-Williams is licensed to sell under their own brand name.

Paint Type	Product Name	NSN	Color
Epoxy			
"Summer Grade":	SeaGuard Anti-Corrosive P23RQ82	8010-01-467-5555	Red
	SeaGuard Anti-Corrosive P23AQ81	8010-01-467-5556	Gray
	-or-		
"Winter Grade":	SeaGuard Anti-Corrosive P23RQ62	8010-01-467-5557	Red
	SeaGuard Anti-Corrosive P23AQ61	8010-01-467-5558	Gray
Ablative	SeaGuard Anti-Corrosive P30RQ10	8010-01-467-5559	Red
	SeaGuard Anti-Corrosive P30BQ12	8010-01-467-5561	Black
Polyurethane	Hi-Solids Polyurethane	Commercial Sources	Federal Color Numbers:
			Same as Hempel

Company Info:

The Sherwin-Williams Company
101 Prospect Ave., NW
Cleveland, OH 44115-1075
1-706-234-8396

Downloaded from http://www.everyspec.com

TABLE 16-3 INTERNATIONAL PRODUCTS

(Shoreside Maintenance Painting)

Paint Type	Product Name	NSN	Color
Epoxy			
"Summer Grade":	FPL274/FPA327 AC	8010-01-268-7583	Red
	FPJ034/FPA327 AC	8010-01-241-9721	Gray
	-or-		
"Winter Grade":	FPL274/FCA321 AC	8010-01-268-7584	Red
	FPJ034/FCA321 AC	8010-01-241-9723	Gray
Epoxy Thinner	GTA415	8010-01-309-0330	
Ablative	BRA 640 AF	8010-01-339-8708	Red
	BRA 642 AF	8010-01-339-8707	Black
Ablative thinner	GTA007	8010-01-272-4050	
Polyurethane	Interthane 990HS	Commercial Sources	Federal Color Numbers:
			Red (11350)
			Green (14193)
			Yellow (13655)
			Orange (12197)
			Blue (15182)
			White (17875)
			Black (17038)

Company Info:

International/Courtaulds Coatings, Inc.
Marine Division
6001 Antoine Drive (77091)
P.O. Box 4806
Houston, TX 77210-4806
713-682-1711

Downloaded from http://www.everyspec.com

TABLE 16-4 WASSER PRODUCTS

(Touch-up Painting on Station)

Paint Type	Product Name	NSN	Federal Color Numbers
Gloss	MC Shieldcoat	8010-01-396-6838	Red (11350)
Gloss	MC Shieldcoat	8010-01-396-6837	Green (14193)
Gloss	MC Shieldcoat	8010-01-396-6842	River Green (14062)
Gloss	MC Shieldcoat	8010-01-396-6839	Yellow (13655)
Gloss	MC Shieldcoat	8010-01-396-6841	Orange (12197)
Gloss	MC Shieldcoat	8010-01-396-6840	Blue (15182)
Gloss	MC Shieldcoat	8010-01-396-6843	White (17875)
Gloss	MC Shieldcoat	8010-01-397-3817	Black (17038)
	-or-		
Semigloss	MC Luster	8010-01-396-6831	Red (21350)
Semigloss	MC Luster	8010-01-396-6832	Green (24193)
Semigloss	MC Luster	8010-01-396-6836	River Green (24062)
Semigloss	MC Luster	8010-01-396-6833	Yellow (23655)
Semigloss	MC Luster	8010-01-396-6835	Orange (22197)
Semigloss	MC Luster	8010-01-396-6834	Blue (25182)
Semigloss	MC Luster	8010-01-396-6830	White (27875)
Semigloss	MC Luster	8010-01-397-3818	Black (27038)
Thinner	MC Thinner 100	8010-01-396-6844	
Accelerator	MC Accelerator	8010-01-397-3677	

Company Info:

Wasser High Tech Coatings
8041 S. 228th
Kent, WA 98302
1-800-627-2968

Downloaded from http://www.everyspec.com

TABLE 16-5 XYMAX PRODUCTS

(Touch-up Painting on Station)

Paint Type	Product Name	NSN	Federal Color Numbers
Gloss	Max Coat HB	8010-01-436-6418	Red (11350)
Gloss	Max Coat HB	8010-01-436-7612	Green (14193)
Gloss	Max Coat HB	8010-01-436-9130	River Green (14062)
Gloss	Max Coat HB	8010-01-436-7618	Yellow (13655)
Gloss	Max Coat HB	8010-01-436-7614	Orange (12197)
Gloss	Max Coat HB	8010-01-436-7610	Blue (15182)
Gloss	Max Coat HB	8010-01-436-7609	White (17875)
Gloss	Max Coat HB	8010-01-436-7616	Black (17038)
	-or-		
Semigloss	Max Coat HB	8010-01-437-0462	Red (21350)
Semigloss	Max Coat HB	Not available	Green (24193)
Semigloss	Max Coat HB	8010-01-436-9773	River Green (24062)
Semigloss	Max Coat HB	8010-01-436-7611	Yellow (23655)
Semigloss	Max Coat HB	8010-01-436-9767	Orange (22197)
Semigloss	Max Coat HB	8010-01-436-9771	Blue (25182)
Semigloss	Max Coat HB	8010-01-436-9768	White (27875)
Semigloss	Max Coat HB	8010-01-436-7608	Black (27038)
Thinner	Thinner X-34	8010-01-436-9128	
Thinner	Thinner X-60	8010-01-436-7605	
Activator	Max Coat HB Activator	8010-01-436-6420	

Company Info:

Xymax Coatings, Inc.
P.O. Box 650
New Kensington, PA 15068-0650
412-339-1442

Downloaded from http://www.everyspec.com

This page left intentionally blank.

Downloaded from http://www.everyspec.com

APPENDIX A. CUTTERS AND BOATS EXTERIOR PAINTING SYSTEM

A. Vessel Coating Systems - Exterior. This appendix presents the required coatings for various exterior areas and components of Coast Guard cutters and boats. The coating systems for each area are presented in tabular form. The tables include the surface preparation, primer, intermediate coats if any, and topcoat. The various coatings used for a particular application should be regarded as a system. The coating system shall be obtained from a single manufacturer to ensure that the individual components are compatible and to maximize performance. Thickness references apply to the dried film and is abbreviated as DFT (dry film thickness). Subject matter in this chapter is listed alphabetically. References are by paragraph heading and include:

1. Accommodation Ladders, Wood. (See Wood, Exterior)
2. Anchors/Anchor Chains.
3. Antenna Hardware, Radio and Radar, DF Loops.
4. Bilge Keel. (See Underwater Body/Boot-Top)
5. Boat Hooks. (See Wood, Exterior)
6. Boatswain's Chairs. (See Wood, Exterior)
7. Boot-Top. (See Underwater Body/Boot-Top)
8. Collars, Small Boat Foam-filled
9. Electric Cables, Armored, Exterior.
10. Fittings.
11. Flight Deck.
12. Freeboard/Superstructure/Mast.
    a. Freeboard/Superstructure/Mast, Steel
    b. Freeboard/Superstructure/Mast, Aluminum
    c. Freeboard/Superstructure/Mast, Aluminum, Unpainted
    d. Freeboard/Superstructure, Fiber Glass
13. Gangplanks, Wood. (See Wood, Exterior)
14. Gratings, Wood. (See Wood, Exterior)
15. Inaccessible Areas.
    a. Inaccessible Areas, Steel
    b. Inaccessible Areas, Galvanized Steel or Aluminum
16. Ladders, Wooden. (See Wood, Exterior)
17. Machinery, Deck.
18. Masts. (See Freeboard/Superstructure/Mast)
19. Metal Repair and Hull Smoothing
20. Piping, Exterior.
21. Propellers. (See Underwater Body/Boot-Top)
22. Propeller Shafts. (See Underwater Body/Boot-Top)
23. Railing, Wood. (See Wood, Exterior)
24. Rudders. (See Underwater Body/Boot-Top)
25. Sea Chests and Gratings. (See Underwater Body/Boot-Top)\
26. Skegs. (See Underwater Body/Boot-Top)Smoke Stacks.
27. Spuds.
28. Strongbacks, Wood. (See Wood, Exterior)
29. Superstructure. (See Freeboard/Superstructure/Mast)
30. Transducer Hull Rings.
31. Underwater Body/Boot-top.
    a. U/W Body and Boot-Top, Steel Hulls (5-10 Years), in Salt Water
    b. U/W Body and Boot-Top, Steel Hulls, in Fresh Water
    c. U/W Body and Boot-Top, Icebreaker >235'
    d. U/W Body and Boot-Top, Icebreaker <235', in Salt Water
    e. U/W Body and Boot-Top, Icebreaker <235’ in Fresh Water

Downloaded from http://www.everyspec.com

f. U/W Body and Boot-Top, Aluminum Hulls
g. U/W Body and Boot-Top, Aluminum Hulls (in waters with limited fouling)
h. U/W Body and Boot-Top, Fiber Glass Hulls in Salt Water
i. U/W Body Appendages: High Turbulent Areas
j. U/W Body Propellers
k. U/W Body Shafts
l. U/W Body Seachest, Icebreaker in Fresh Water
m. U/W Body Zincs
n. U/W Body Dielectric Shield for ICCP Systems

32. Weather Decks.
    a. Weather Deck Non-Skid, Steel
    b. Weather Deck Non-Skid, Aluminum
    c. Weather Deck Slip Resistant Sheets
    d. Weather Deck, Buoy Tender Working Deck
33. Wood, Exterior.
34. Zinc (or other Sacrificial) Anodes. (See Underwater Body/Boot-Top)

WARNING

PERSONNEL INVOLVED IN THE REMOVAL AND APPLICATION OF PAINTS, PRIMERS, VARNISHES, OR SIMILAR TREATMENTS, OR THE PREPARATION OF SURFACES FOR THE APPLICATION OF PAINT OR PAINT PRODUCTS, SHALL BE FAMILIAR WITH THE CONTENTS OF CHAPTER 2 OF THIS MANUAL, THE INFORMATION CONTAINED ON ALL APPLICABLE MATERIAL SAFETY DATA SHEETS, AND TECHNICAL GUIDE: PRACTICES FOR RESPIRATORY PROTECTION, COMDTINST M6260.2 (series). PERSONNEL SHALL ALSO BE FAMILIAR WITH THE ENVIRONMENTAL ISSUES ADDRESSED IN CHAPTER 3 OF THIS MANUAL.

Downloaded from http://www.everyspec.com

Exterior Surfaces to be Preserved	Option	Surface Preparation / (Anchor Profile in mils)	Coating System	DFT (mils)	Notes
ANCHOR/ANCHOR CHAIN					
		SSPC-SP 6/NACE NO. 3 using grit conforming to MIL-A-22262 / (1.5-3.5)	1) Polysiloxane 2) Polysiloxane 3) Polysiloxane	Mist Coat 5.0-6.0 5.0-6.0	1
ANTENNA HARDWARE, RADIO AND RADAR, DF LOOPS					
		SSPC-SP 10/NACE NO. 2 using grit conforming to MIL-A-22262 / (1.5-3.5) [metal hardware only]	1) High Build Epoxy 2) MIL-PRF-24635 Silicone Alkyd, Type II, Cl. 1	5.0-6.0 2.0-3.0	2
COLLARS, SMALL BOAT FOAM-FILLED					
		See Notes	1) Polysiloxane 2) Minimum additional coats as needed to provide consistent color coverage	5.0-6.0	44
ELECTRIC CABLES, ARMORED, EXTERIOR					
	I	Clean with Adhesion Promoter/Cleaner. Break gloss with sandpaper as required.	1) Polysiloxane 2) Polysiloxane	5.0-6.0 2.0-3.0	2, 3, 39
	II	Same as Option I	1) High Build Epoxy (dip the cable) 2) MIL-PRF-24635 Silicone Alkyd, Type II, Cl. 1	5.0-6.0 2.0-3.0	
FITTINGS					
Bulkhead and deck fittings, including pad eyes, links, chain stoppers. . .		Use the same surface preparation as used for surfaces on which fittings are attached.	Use the same coating system as for surfaces on which fittings are attached (for deck fittings: omit non-skid aggregate and select top color coat as per Chapter 11.)		
FLIGHT DECK					
	I	SSPC-SP 10/NACE NO. 2 using AA-1043 Steel Shot or grit conforming to MIL-A-22262 / (3.0-4.5) - or - SSPC-SP 12/NACE NO. 5, WJ-2/L	1) MIL-PRF-24667 Type I, Comp. G Primer 2) MIL-PRF-24667 Type I, Comp. G Non-skid	Follow Manuf. Instructions	4, 5
	II	Same as Option I	1) MIL-PRF-24667 Type II, Comp. G Primer 2) MIL-PRF-24667 Type II, Comp. G UV Resistant Epoxy/Low Solar Absorbing Non-skid	Follow Manuf. Instructions	
FREEBOARD/SUPERSTRUCTURE/MAST					
Freeboard/ Superstructure, Steel	I	SSPC-SP 10/NACE NO. 2 using grit conforming to MIL-A-22262 / (1.5-2.5) - or - SSPC-SP 12/NACE NO. 5, WJ-2/L	1) Zinc Rich Primer-Polysiloxane System 2) Polysiloxane 3) Polysiloxane	3.0-4.0 1.0-2.0 5.0-6.0	2, 6, 7, 8, 9, 10, 16, 39

Downloaded from http://www.everyspec.com

Exterior Surfaces to be Preserved	Option	Surface Preparation / (Anchor Profile in mils)	Coating System	DFT (mils)	Notes
	II	Same as Option I	1) Zinc Rich Primer-Polysiloxane System 2) Epoxy Primer/Mid - Coat - Polysiloxane Sys 3) Polysiloxane	3.0-4.0 5.0-6.0 5.0-6.0	
	III	Same as Option I	1) Epoxy Primer/Mid - Coat - Polysiloxane Sys 2) Epoxy Primer/Mid - Coat - Polysiloxane Sys 3) Polysiloxane	5.0-6.0 5.0-6.0 5.0-6.0	
	IV	SSPC-SP 10/NACE NO. 2 using grit conforming to MIL-A-22262 / (1.5-2.5)	1) Inorganic Zinc 2) High Build Epoxy 3) High Build Epoxy 4) MIL-PRF-24635 Silicone Alkyd, Type II, Cl. 1	3.0-4.0 Mist Coat 5.0-6.0 2.0-3.0	
	V	Same as Option I	1) High Build Epoxy 2) High Build Epoxy 3) MIL-PRF-24635 Silicone Alkyd, Type II, Cl. 1	5.0-6.0 5.0-6.0 2.0-3.0	
Freeboard/ Superstructure, Aluminum or Galvanized Steel	I	Brush blast to bare metal with clean, fine aluminum oxide, garnet or equivalent inert material conforming to CID A-A-59316, Type I & IV / (1.5-2.5) - or - SSPC-SP 12/NACE NO. 5, WJ-2/L	1) Polysiloxane 2) Polysiloxane	1.0-2.0 5.0-6.0	16, 39
	II	Same as Option I	1) Epoxy Primer/Mid - Coat - Polysiloxane Sys 2) Polysiloxane	5.0-6.0 5.0-6.0	
	III	Same as Option I	1) High Build Epoxy 2) MIL-PRF-24635 Silicone Alkyd, Type II, Cl. 1	5.0-6.0 2.0-3.0	
Freeboard/ Superstructure, Aluminum, Unpainted		Blast with glass bead: 1) #8 conforming to MIL-G-9954A, 2) No. AGB-18 (U.S. sieve size 70-100) as designated by AMS 2431A, or 3) commercial equivalent	-	-	16, 36, 37, 39
Freeboard/ Superstructure, Fiber Glass Fiber Reinforced Plastic [FRP]/Fiber	I	Sand lightly with 120 grit paper to break the glaze and roughen the surface then wash with Adhesion Promoter/Cleaner. On new material, remove mold release by washing with cleaner before sanding and	1) Polysiloxane 2) Polysiloxane	Mist Coat 3.0-4.0	2, 8, 16, 39

Downloaded from http://www.everyspec.com

Exterior Surfaces to be Preserved	Option	Surface Preparation / (Anchor Profile in mils)	Coating System	DFT (mils)	Notes
Reinforced Epoxy/ Fiber Reinforced Polyester)	II	clean again. Same as Option I	1) High Build Epoxy 2) MIL-PRF-24635 Silicone Alkyd, Type II, Cl. 1	Mist Coat 2.0-3.0	
INACCESSIBLE AREAS					
Inaccessible Areas, Steel	I	SSPC-SP 10/NACE NO. 2 using grit conforming to MIL-A-22262 / (1.5-2.5)	1) Inorganic Zinc	3.0-4.0	6, 9
	II	SSPC-SP 10/NACE NO. 2 using grit conforming to MIL-A-22262 / (1.5-2.5)	1) High Build Epoxy 2) High Build Epoxy	5.0-6.0 5.0-6.0	
	III	Brush blast with grit conforming to MIL-A-22262 or mechanical tools	1) MIL- PRF -16173 Solvent Cutback Corrosion Preventive Compound, Grade 3 (1 coat)	-	
Inaccessible Areas, Galvanized Steel or Aluminum		Roughen by brush blasting with clean fine aluminum oxide, garnet or equivalent inert material, or mechanical tools	1) High Build Epoxy 2) High Build Epoxy	5.0-6.0 5.0-6.0	11
MACHINERY, DECK					
	I	SSPC-SP 10/NACE NO. 2 using grit conforming to MIL-A-22262 / (1.5-2.5) - or - SSPC-SP 12/NACE NO. 5, WJ-2/L	1) Zinc Rich Primer-Polysiloxane System 2) Polysiloxane 3) Polysiloxane	3.0-4.0 1.0-2.0 5.0-6.0	2, 6, 7, 8, 9, 10, 12, 39
	II	Same as Option I	1) Zinc Rich Primer-Polysiloxane System 2) Epoxy Primer/Mid - Coat - Polysiloxane Sys 3) Polysiloxane	3.0-4.0 5.0-6.0 5.0-6.0	
	III	Same as Option I	1) Epoxy Primer/Mid - Coat - Polysiloxane Sys 2) Epoxy Primer/Mid - Coat - Polysiloxane Sys 3) Polysiloxane	5.0-6.0 5.0-6.0 5.0-6.0	
	IV	SSPC-SP 10/NACE NO. 2 using grit conforming to MIL-A-22262 / (1.5-2.5)	1) Inorganic Zinc 2) High Build Epoxy 3) High Build Epoxy 4) MIL-PRF-24635 Silicone Alkyd, Type II, Cl. 1	3.0-4.0 Mist Coat 5.0-6.0 2.0-3.0	
	V	Same as Option I	1) High Build Epoxy 2) High Build Epoxy 3) MIL-PRF-24635 Silicone Alkyd, Type II, Cl. 1	5.0-6.0 5.0-6.0 2.0-3.0	

Downloaded from http://www.everyspec.com

Exterior Surfaces to be Preserved	Option	Surface Preparation / (Anchor Profile in mils)	Coating System	DFT (mils)	Notes
METAL REPAIR AND HULL SMOOTHING					
		Steel: SSPC-SP 10/NACE NO. 2 using grit conforming to MIL-A-22262 / (1.5-2.5) Aluminum: Brush blast to bare metal with clean, fine aluminum oxide, garnet or equivalent inert material conforming to CID A-A-59316, Type I & IV / (1.5-2.5)	1) DOD-PRF-24176 Cement, Epoxy, Metal Repair and Hull Smoothing	Follow Manuf. Instructions	38
PIPING, EXTERIOR					
	I II	SSPC-SP 10/NACE NO. 2 using grit conforming to MIL-A-22262 / (1.5-3.5) Same as Option I	1) Polysiloxane 2) Polysiloxane 1) High Build Epoxy 2) High Build Epoxy 3) MIL-PRF-24635 Silicone Alkyd, Type II, Cl. 1	5.0-6.0 5.0-6.0 5.0-6.0 5.0-6.0 2.0-3.0	2, 39
SMOKE STACK					
Smoke Stack Casing, Steel Exterior		SSPC-SP 10/NACE NO. 2 using grit conforming to MIL-A-22262 / (1.5-2.5)	1) Inorganic Zinc 2) High Build Epoxy 3) High Build Epoxy 4) MIL-PRF-24635 Silicone Alkyd, Type II, Cl. 1	3.0-4.0 Mist Coat 5.0-6.0 2.0-3.0	2, 6, 8, 9, 10
Smoke Stack Casing, Steel Interior (containing uninsulated exhaust piping)		SSPC-SP 6/NACE NO. 3 using grit conforming to MIL-A-22262 / (1.0-2.0)	1) Fed Spec TT-P-28 Heat Resisting Aluminum Paint 2) Fed Spec TT-P-28 Heat Resisting Aluminum Paint	1.0-2.0 1.0-2.0	
Smoke Stack Casing, Steel Interior (containing insulated exhaust piping)		SSPC-SP 10/NACE NO. 2 using grit conforming to MIL-A-22262 / (1.5-3.5)	1) High Build Epoxy 2) High Build Epoxy 3) MIL-PRF-24635 Silicone Alkyd, Type II, Cl. 1	5.0-6.0 5.0-6.0 2.0-3.0	2
Smoke Stack Exterior Within Casing		SSPC-SP 10/NACE NO. 2 using grit conforming to MIL-A-22262 / (1.5-3.5)	1) High Build Epoxy 2) High Build Epoxy	5.0-6.0 5.0-6.0	
SPUDS					

Downloaded from http://www.everyspec.com

Exterior Surfaces to be Preserved	Option	Surface Preparation / (Anchor Profile in mils)	Coating System	DFT (mils)	Notes
	I	SSPC-SP 10/NACE NO. 2 using grit conforming to MIL-A-22262 / (1.5-3.5)	1) Polysiloxane 2) Polysiloxane	5.0-6.0 5.0-6.0	2, 13, 39
	II	Same as Option I	1) High Build Epoxy 2) High Build Epoxy 3) MIL-PRF-24635 Silicone Alkyd, Type II, Cl. 1	5.0-6.0 5.0-6.0 2.0-3.0	
TRANSDUCER HULL RINGS					
Exterior surfaces		Same surface preparation as the rest of the Underwater Body Surfaces	Use the same coating system as the rest of the Underwater Body Surfaces		14
UNDERWATER (U/W) BODY/BOOT-TOP					
U/W Body and Boot-Top, Steel Hulls (5-10 Years), in Salt Water		SSPC-SP 10/NACE NO. 2 using grit conforming to MIL-A-22262 / (1.5-3.5) - or - SSPC-SP 12/NACE NO. 5, WJ-2/L	1) MIL-PRF-24647 Anti-corrosive Epoxy 2) MIL-PRF-24647 Anti-corrosive Epoxy 3) MIL-PRF-24647 Copper Ablative, Type I, Class 1A 4) MIL-PRF-24647 Copper Ablative, Type I, Class 1A 5) MIL-PRF-24647 Copper Ablative, Type I, Class 1A (Boot-Top only)	5.0-6.0 5.0-6.0 5.0-6.0 5.0-6.0 5.0-6.0	15, 16, 18, 19, 40
U/W Body and Boot-Top, Steel Hulls, in Fresh Water		SSPC-SP 10/NACE NO. 2 using grit conforming to MIL-A-22262 / (1.5-3.5) - or - SSPC-SP 12/NACE NO. 5, WJ-2/L	1) MIL-PRF-24647 Anti-corrosive Epoxy 2) MIL-PRF-24647 Anti-corrosive Epoxy	5.0-6.0 5.0-6.0	16, 18, 20
U/W Body and Boot-Top, Icebreaker > 235'		SSPC-SP 10/NACE NO. 2 using grit conforming to MIL-A-22262 / (3.5-5.5)	1) Anti-Abrasion Coating, Icebreaker, >235'	20-30	16, 18, 21
U/W Body and Boot-Top, Icebreaker <235', in Salt Water		SSPC-SP 10/NACE NO. 2 using grit conforming to MIL-A-22262 / (1.5-3.5) - or - SSPC-SP 12/NACE NO. 5, WJ-2/L	1) Anti-Abrasion Coating, Icebreaker, <235' 2) Anti-Abrasion Coating, Icebreaker, <235' 3) MIL-PRF-24647 Copper Ablative, Type I, Class 1A 4) MIL-PRF-24647 Copper Ablative, Type I, Class 1A	Follow Manuf. Instructions 5.0-6.0 5.0-6.0	16, 18, 22

Downloaded from http://www.everyspec.com

Exterior Surfaces to be Preserved	Option	Surface Preparation / (Anchor Profile in mils)	Coating System	DFT (mils)	Notes
U/W Body and Boot-Top, Icebreaker <235', in Fresh Water (Excluding Sea Chests)		SSPC-SP 10/NACE NO. 2 using grit conforming to MIL-A-22262 / (1.5-3.5) - or - SSPC-SP 12/NACE NO. 5, WJ-2/L	1) Anti-Abrasion Coating, Icebreaker, <235' 2) Anti-Abrasion Coating, Icebreaker, <235'	Follow Manuf. Instructions	16, 18
U/W Body and Boot-Top, Aluminum Hull	I	Brush blast to bare metal with clean, fine aluminum oxide, garnet or equivalent inert material conforming to CID A-A-59316, Type I & IV / (1.5-2.5) - or - SSPC-SP 12/NACE NO. 5, WJ-2/L	1) MIL-PRF-24647 Anti-corrosive Epoxy 2) MIL-PRF-24647 Anti-corrosive Epoxy 3) Antifoulant, Non-copper 4) Antifoulant, Non-copper 5) Antifoulant, Non-copper 6) Antifoulant, Non-copper (Boot-Top only) 7) Antifoulant, Non-copper (Boot-Top only)	5.0-6.0 5.0-6.0 3.0-4.0 3.0-4.0 3.0-4.0 3.0-4.0 3.0-4.0	16, 18, 22, 23, 24
	II	Same as Option I	1) Fouling Release Coating System	Follow Manuf. Instructions	
U/W Body and Boot-Top, Aluminum Hull (in waters with limited fouling)		Brush blast to bare metal with clean, fine aluminum oxide, garnet or equivalent inert material conforming to CID A-A-59316, Type I & IV / (1.5-2.5) - or - SSPC-SP 12/NACE NO. 5, WJ-2/L	1) MIL-PRF-24647 Anti-corrosive Epoxy 2) MIL-PRF-24647 Anti-corrosive Epoxy	5.0-6.0 5.0-6.0	16, 18, 22, 41
U/W Body and Boot-Top, Fiber Glass Hulls in Salt Water		Roughen surface with 120 grit paper and wash with Adhesion Promoter/Cleaner. On new surfaces, remove mold release with a cleaner, sand and clean again.	1) MIL-PRF-24647 Anti-corrosive Epoxy 2) MIL-PRF-24647 Copper Ablative, Type I, Class 1A 3) MIL-PRF-24647 Copper Ablative, Type I, Class 1A	Mist Coat 4.0-5.0 4.0-5.0	8, 16, 18, 22, 25, 26
U/W Body Appendages: High Turbulent Areas (i.e.,Rudders, Struts, Fins for 110 WPBs)		SSPC-SP 10/NACE NO. 2 using grit conforming to MIL-A-22262 / (1.5-3.5) - or - SSPC-SP 12/NACE NO. 5, WJ-2/L	1) High Turbulence Coating 2) High Turbulence Coating 3) Follow with same number coats of antifoulant used for the rest of the underwater body	10.0-11.0 10.0-11.0 -	40
U/W Body Propellers		<u>Cast Steel and Cast Iron</u>: <u>All Other Materials</u>:	Treat the same as Underwater Body Appendages Clean and polish bright. - Do not paint -		

Downloaded from http://www.everyspec.com

Exterior Surfaces to be Preserved	Option	Surface Preparation / (Anchor Profile in mils)	Coating System	DFT (mils)	Notes
U/W Body Shafts		Corrosion Resistant Materials (such as Monel, Aquamet, and FRP wrap): Clean and polish metallic surfaces bright. All Other Materials: Use same surface preparation method as the rest of the underwater body	- Do not paint - Apply same antifouling coating system as the rest of the underwater body	-	
U/W Body Sea Chest, Icebreaker in Fresh Water		SSPC-SP 10/NACE NO. 2 using grit conforming to MIL-A-22262 / (1.5-2.5)	1) Inorganic Zinc	3.0-4.0	9
U/W Body Sea Chest, Sea Chest Strainer Plates, Grid Cooler Hull Recesses in Fresh Water (for WLR River Tenders and Barges)		SSPC-SP 10/NACE NO. 2 using grit conforming to MIL-A-22262 / (1.5-2.5)	1) MIL-PRF-24647 Anti-corrosive Epoxy 2) MIL-PRF-24647 Copper Ablative, Type I, Class 1A 3) MIL-PRF-24647 Copper Ablative, Type I, Class 1A	Mist Coat 4.0-5.0 4.0-5.0	8, 16, 18, 25, 26
U/W Body Zincs (or other sacrificial anodes)			- Do not paint -		27
U/W Body Dielectric Shield for ICCP Systems		SSPC-SP 5/NACE NO. 1 using grit conforming to MIL-A-22262 / (2.5-3.5)	1) Dielectric Shield Fairing Compound	Varies	42
WEATHER DECKS					
Weather Deck Non-Skid, Broadcast Grit for Steel or Aluminum		Perform the same surface preparation used for Freeboard/Superstructure	1) Apply the same coating system used for Freeboard/Superstructure 2) #8-16 Garnet or inert grit conforming to MIL-A-22262 3) Polysiloxane or MIL-PRF-24635 Silicone Alkyd, Type II, Cl. 1, as appropriate	2.0-3.0	6, 7, 8, 9, 10, 28, 39
Weather Deck Non-Skid, MIL-SPEC Coating for Steel or Aluminum		Steel: SSPC-SP 10/NACE NO. 2 using grit conforming to MIL-A-22262 /(1.5-3.5) - or - SSPC-SP 12/NACE NO. 5, WJ-2/L	1) MIL-PRF-24667 Type I, II, III, or IV Comp. G Primer 1a) MIL-PRF-24667 Type III Intermediate Membrane (Only for Type III) 2) MIL-PRF-24667 Type I, II, III, or IV Comp. G Non-skid	Follow Mfr's Instructions	29, 30, 31

Downloaded from http://www.everyspec.com

Exterior Surfaces to be Preserved	Option	Surface Preparation / (Anchor Profile in mils)	Coating System	DFT (mils)	Notes
		Aluminum: Brush blast to bare metal with clean, fine aluminum oxide, garnet or equivalent inert material conforming to CID A-A-59316, Type I & IV / (1.5-2.5) - or - SSPC-SP 12/NACE NO. 5, WJ-2/L			
Weather Deck Slip Resistant Sheets	I	Steel: SSPC-SP 10/NACE NO. 2 using grit conforming to MIL-A-22262 / (1.5-2.5) - or - SSPC-SP 12/NACE NO. 5, WJ-2/L	1) Zinc Rich Primer-Polysiloxane System 2) Polysiloxane 3) Polysiloxane 4) Slip Resistant Sheet 5) Edge Sealing Compound	3.0-4.0 Mist Coat 5.0-6.0	6, 7, 8, 32
	II	Same as Option I	1) Zinc Rich Primer-Polysiloxane System 2) Epoxy Primer/Mid - Coat - Polysiloxane Sys 3) Polysiloxane 4) Slip Resistant Sheet 5) Edge Sealing Compound	3.0-4.0 5.0-6.0 5.0-6.0	
	III	Same as Option I	1) Epoxy Primer/Mid - Coat - Polysiloxane Sys 2) Epoxy Primer/Mid - Coat - Polysiloxane Sys 3) Polysiloxane 4) Slip Resistant Sheet 5) Edge Sealing Compound	5.0-6.0 5.0-6.0 5.0-6.0	
		Aluminum: Abrasive blast with glass bead conforming to SAE AMS 2431/6 #AGB-18	1) Slip Resistant Sheet Primer 2) Slip Resistant Sheet 3) Edge Sealing Compound		
Weather Deck, Buoy Tender Working Deck		SSPC-SP 10/NACE NO. 2 using grit conforming to MIL-A-22262 / (1.5-2.5)	1) Inorganic Zinc Safety Markings on Inorganic Zinc Buoy Deck: 1) Polysiloxane 2) Polysiloxane - or - 1) High Build Epoxy 2) High Build Epoxy 3) MIL-PRF-24635 Silicone Alkyd, Type II, Cl. 1	3.0-4.0 Mist Coat 5.0-6.0 Mist Coat 5.0-6.0 2.0-3.0	7, 8, 33, 43

Downloaded from http://www.everyspec.com

Exterior Surfaces to be Preserved	Option	Surface Preparation / (Anchor Profile in mils)	Coating System	DFT (mils)	Notes
WOOD, EXTERIOR					
Wood, Exterior (i.e., Accommodation Ladder, Boat Hooks, Boatswain's Chairs, Gangplanks and Brows, Gratings, Ladders, Railings, and Strongbacks)		Sand with 80 grit (or coarser) sand paper	1) Synthetic Wood Finish - follow manufacturer's instructions - or - 1) CID A-A-1800Spar Varnish 2) CID A-A-1800 Spar Varnish 3) CID A-A-1800 Spar Varnish 4) CID A-A-1800 Spar Varnish 5) CID A-A-1800 Spar Varnish	- 1.0-2.0 1.0-2.0 1.0-2.0 1.0-2.0 1.0-2.0	34, 35

Notes

1. Do not paint galvanized or stainless steel anchor, chain, or ground tackle.

2. An extra coat of the topcoat may be required, particularly when brushing or rolling, to achieve proper dry film thickness or to get complete color coverage of the primer underneath.

3. Initially dip armored electric cables in the epoxy primer. After pulling the cables, touch up the primer and follow with topcoat. Do not paint identification labels.

4. Apply in accordance with NSTM Ch. 634 for Navy Certification. All flight decks shall be applied and maintained in accordance with NSTM Ch. 634. Color coating flight decks for other than required markings is not authorized. Flight decks shall not be applied by ships work force. However, ships force may make repairs to flight decks and apply flight deck nonskid to any other portion of the weather deck as necessary for personnel safety. Nonskid material is rolled on over primer within 48 hours for best adhesion. On WMEC 210's the flight deck material shall be extended forward to frame 98 for added personnel safety.

5. Power tool cleaning to bare metal (SSPC-SP 11) may be used in areas that cannot be accessed by abrasive blasting or waterjetting.

6. Inorganic zinc paints cause metal fume fever when cut or burned with a torch.

7. Do not apply inorganic zinc to water-jetted surfaces.

8. A mist coat is 1.0-2.0 mils (wet film thickness) of paint applied to promote adhesion or compatibility between unlike materials for spray applications only.

9. Water-based inorganic zinc may only be applied when ambient air and substrate temperature are above 50 degrees F, in order for the water to evaporate completely and form a continuous coating. Water based coatings will not dry at relative humidity above 80 percent.

10. An Organic Zinc coating may be used to replace inorganic zinc for repair/maintenance of inorganic zinc systems.

Downloaded from http://www.everyspec.com

11. All inaccessible voids that bear against the shell shall be welded tight, tested for tightness, and treated by filling and draining with a rust preventive compound conforming to MIL-C-16173, Grade 3. These include rudders, skegs, sealed void spaces at the stem and voids in the bilges or voids constantly exposed to salt water. Inaccessible voids on steel weather decks shall be prime coated wherever possible before welding of the closure plate and shall be tested for tightness. No further treatment is required. Examples are masts, yards, booms, davits, boxed-in foundations, and boxed-in bulwark structures.

12. Coat the working surfaces of machinery or the surfaces of winch and capstan drums that contact line with an Inorganic Zinc (3.0-4.0 mils), Solvent Cutback Corrosion Preventative Compound, MIL-PRF-16173 Grade 3, or Thin Film Corrosion Preventative Compound, MIL-C-81309 Type II, Class I.

13. Refer to Chapter 11. Cutters and Boats Colors - Exterior and Interior for painting of safety markings. Apply one coat of MIL-PRF-24635 Silicone Alkyd at 3 mils DFT for color warning bands.

14. Transducer diaphragms are fouling resistant and should only be painted when it is determined, in conjunction with the servicing electronics facility, that the protection of antifouling paint is required.

15. This antifoulant system is a modification of requirements in MIL-PRF-24647 to provide a 10 year system with periodic touch up on a 2-5 year dry-dock cycle. The second coat of anticorrosive epoxy and the antifoulant are applied over the previous coat of epoxy while still tacky, which is defined as that curing (drying) stage when a fingertip pressed lightly against the film leaves only a slight impression and none of the film sticks to the finger. Cutters and boats painted with ablative paint should be washed with high pressure water (approximately 3000 psi, do not exceed 5000 psi) immediately after being removed from the water to prevent fouling from drying on the paint. When dry-docking for repainting, the defective areas shall be prepared to near white metal and touched up with epoxy. The entire hull should never be abrasive blasted to bare metal unless the entire bottom coat has failed or failure is inevitable in the immediate future.

16. Apply one coat of polysiloxane or MIL-PRF-24635 Silicone Alkyd at 3 mils DFT for the draft marks.

17. Deleted.

18. For coating purposes, the bilge keel, sea chest, gratings, and skegs are treated as part of the underwater body.

19. Ablative Paint is required on all steel cutters and boats which use antifoulant unless specifically excluded by the MLC's. These coatings have a proven record of cost reduction by extending dry-dock intervals, reducing fuel consumption and reducing painting costs. Life span for these coatings is 9-12 years with periodic touch up on a 2-5 year basis. Areas where the primer is worn through on the rudders, stabilizing fins, bow and above the props should be reprimed. When preparing these surfaces, it is a good idea to clean chloride ions out of the corrosion with a high pressure water blast or steam cleaning before grit blasting. Ablative antifoulant paint wears away differentially on the hull and it is color coded to show the high wear areas which will be at the bow, stern, and boot top areas. When repainting, use the original manufacturer's product to make repairs. Ablative paint should be built back up to the original 10 mil overall thickness below the boot-top and 15 mils on the boot-top. Adding 10 mils of paint over the entire hull at each dry docking will result in excessive film thickness. Ablative paint is applied directly to the epoxy primer while it is still tacky. There is no intermediate coat between the epoxy primer and the ablative paint. Intermediate coats will accomplish nothing and increase the probability that the ablative paint will delaminate.

20. Sea chest, sea chest strainer plates, grid cooler hull recesses for WLR cutters and barges will be coated with a MIL-PRF-24647 Copper Ablative, Type I, Class 1A/Epoxy coating system for zebra mussel control.

Downloaded from http://www.everyspec.com

21. Fill deep pitting with manufacturers filling compound prior to coating.

22. Total removal of antifouling coatings is not required. Total dry film thickness encountered during removal may exceed specified thicknesses.

23. Contact the manufacturer for application instructions and require the manufacturer's technical representative to be present while the coating is applied. The final coat shall have an almost gloss or wet sheen finish. Areas with a flat finish must be repainted to a wet sheen finish. Fouling release coatings must not be scraped or cleaned with a stiff brush. Once scratched, the topcoat must be reapplied to prevent fouling adhesion.

24. With the Antifoulant, Non-copper option, the underwater body will be white with a black boot-top. In this case, the boot-top is defined as extending six inches below the design water line.

25. Blistered material should be removed, flushed clean with water, thoroughly dried out, and built back up with a 100% solids epoxy chemically resistant filler. Avoid introducing dirt or abrasive blasting grit in to the fiberglass as this may stimulate additional blisters. Structurally damaged areas should be reinforced with a 100% solids chemically resistant epoxy resin. To retard blistering, wash the hull with Adhesion Promoter/Cleaner. Topcoat to 15 mils DFT with 100% solids epoxy tank coating which is chemically resistant. Epoxy resin should contain no water soluble components.

26. Apply the first coat of ablative antifouling paint while the epoxy is still tacky.

27. Do not paint zinc (or other sacrificial anodes). Paint areas beneath all sacrificial anodes the same as the underwater body.

28. For broadcast grit non-skid systems, spread #8-16 Garnet or MIL-A-22262 Inert Abrasive Grit over the last polysiloxane or epoxy coat when wet. Let it dry for 8 hours and sweep off the excess. Then apply polysiloxane or MIL-PRF-24635 Silicone Alkyd Enamel topcoat.

29. Units may opt to apply a coat of inorganic or organic zinc primer on steel decks (not aluminum) prior to applying this system. If inorganic zinc is preferred, it must be covered with a mist coat, 1.0-2.0 (wet film thickness) of high build epoxy prior to applying the full high build epoxy primer coat. Do not apply inorganic or organic zinc to flight decks.

30. Polyurethane primers, membranes, color toppings, and non-skid are not allowed, even if listed on QPL-24667.

31. Type III non-skid deck coverings with an intermediate underlayment coat should only be used on decks that undergo a great deal of flexing or uneven decks where flatness is required.

32. Slip resistant sheets have been authorized for all cutters and boats. Installation drawings are available for the 41 UTB, 47 MLB, and 87 WPB (41UT-1901-2, 47B MLB-634-010, and 87-WPB-634-1, respectively). Use the following guidance when installation drawings are not available: 1) Slip resistant sheet material shall be applied to within approximately 2 inches of deck fittings and protrusions and to within approximately 5 inches from coaming and deck edges; 2) No more than approximately 3 inches shall separate adjacent pieces on all work and traffic areas; 3) Avoid applying slip resistant sheet material over raised weld seams.

33. The safety markings are alternating yellow and black stripes at 45 degrees to the bulwark for a distance of two feet.

Downloaded from http://www.everyspec.com

34. Do not paint since paint will prevent the detection of cracks and splits.

35. The commercial equivalent to A-A-1800 Spar Varnish may be used.

36. If the surface to be glass bead blasted has been previously painted, the paint may be removed by waterjetting or brushblasting with a very fine aluminum oxide, garnet, or equivalent inert material.

37. The satin aluminum finish shall be defined as having: 1) a surface profile which does not exceed 2.5 mils as measured by TESTEX Press-O-Film Replica Tape (X-Coarse 1.5-4.5 mils) and 2) spherically shaped indentations with a diameter less than or equal to 0.2 mm as measured by an optical comparator such as a Fowler 7X comparator with a #7 reticle.

38. Grit blasting is the best method to prepare the surface, however, it may not be possible to grit blast due to configuration or other restraints. Review manufacturer's instructions to determine other acceptable surface preparation methods.

39. The Polysiloxane System shall be used for all new construction. The silicone alkyd system should only be selected for maintaining an existing silicone alkyd system or as a lower cost option when superior performance is not a requirement.

40. A High Turbulence Coating that is capable of being applied underwater shall be used for any temporary repairs to the underwater body or appendages where bare metal has been exposed. These coatings are not antifoulants and should be removed and replaced with the standard underwater body coating system at the next drydock.

41. The underwater body of an aluminum hull boat in fresh water is not required to be painted if fouling has not been an issue in the operating area. In this case, the boot-top of an aluminumhull boat would not require paint if the freeboard is not painted. If the freeboard is painted, then the boot-top above the waterline should be painted with the polysiloxane or silicone alkyd system.

42. Refer to the specific class installation drawings/tech pub for installation of the dielectric shield. Older drawings/tech pubs may refer to coal tar epoxy for the outer area of the shield which is no longer authorized. Use the Dielectric Shield Fairing Compound instead of coal tar epoxy.

43. If a closed loop grit blast unit is used to prepare the working deck surfaces, non-working areas of the buoy deck may be waterjetted [SSPC-SP 12/NACE NO. 5, WJ-2/L] or power tool cleaned (SSPC-SP 11) and coated with one coat each of an Organic Zinc (3.0-4.0 mils DFT)/High Build Epoxy (5.0-6.0 mils DFT). The color of the High Build Epoxy shall match the color of the Inorganic Zinc applied to the working areas.

44. Prior to applying the Polysiloxane coating, clean the collar surface with an Adhesion Promoter/Cleaner such as Ameron Prep 88 and then pressure wash with water. Do not allow the Adhesion Promoter/Cleaner to dry on the surface. Do not disturb the collar surface by sanding, grinding, or abrading before painting unless your servicing health and safety staff confirm that the collar does not contain lead.

Downloaded from http://www.everyspec.com

APPENDIX B. CUTTERS AND BOAT INTERIOR PAINTING SYSTEMS

A. Vessel Coating Systems - Interior. This appendix presents the required coatings for various interior areas and components of Coast Guard cutters and boats. The coating systems for each area are presented in tabular form. The tables include the surface preparation, primer, intermediate coat if any, and topcoat. The various coatings used for a particular application should be regarded as a system. The coating system shall be obtained from a single manufacturer to ensure that the individual components are compatible and maximize performance. Thickness references apply to the dried film and is abbreviated as DFT (dry film thickness). Subject matter in this chapter is listed alphabetically. References are by paragraph heading and include:

1. Bilges, Cofferdams, Foundations, and Forepeaks.
2. Bulkheads.
   a. Bulkheads and Overheads, Uninsulated Aluminum
   b. Bulkheads and Overheads, Uninsulated Steel
   c. Bulkheads and Overheads, Uninsulated Metal (wet areas)
   d. Bulkheads and Overheads, Uninsulated Steel (appearance not a factor)
   e. Bulkheads and Overheads, Uninsulated Aluminum (appearance not a factor)
3. Chain Lockers
4. Condensation, Space Subjected to
5. Deckplates
   a. Deckplates, Steel
   b. Deckplates, Aluminum
6. Decks, Metal Interior and Non-skid Areas
   a. Steel and Aluminum Decks (wet areas)
   b. Steel and Aluminum Decks (dry areas)
   c. Metal Decks, Non-Skid Tread
7. Door, Joiner
8. Electric Cable, Armored
9. Electronics Equipment
10. Furniture and Galley Equipment
11. Inaccessible Areas
    a. Inaccessible Areas, Steel
    b. Inaccessible Areas, Galvanized Steel and Aluminum
12. Insulation Surfaces
13. Ladders, Stainless Steel, Galvanized Steel and Aluminum
14. Machinery, Interior
    a. Machinery, Operating Temperatures Under 200°F
    b. Machinery, Operating Temperatures Over 200°F
15. Piping, Interior
    a. Piping, Insulated and Uninsulated, Under 200°F
    b. Piping, Uninsulated, Over 200°F
16. Plastic Surfaces
17. Tanks and Voids
    a. Tanks and Voids, General
    b. Ballast Tanks
    c. Fuel/JP-5 Tanks, Service, Storage, Overflow, Drain
    d. Grey Water, Sewage, and CHT Tanks
    e. Lube Oil and Fuel Tanks, Unballasted with water extraction systems
    f. Potable Water Tank
18. Transducer Hull Rings
19. Wood, Interior
    a. Wood, Painted Interior
    b. Wood, Stained and Varnished Interior

Downloaded from http://www.everyspec.com

WARNING

PERSONNEL INVOLVED IN THE REMOVAL AND APPLICATION OF PAINTS, PRIMERS, VARNISHES, OR SIMILAR TREATMENTS, OR THE PREPARATION OF SURFACES FOR THE APPLICATION OF PAINT OR PAINT PRODUCTS, SHALL BE FAMILIAR WITH THE CONTENTS OF CHAPTER 2 OF THIS MANUAL, THE INFORMATION CONTAINED ON ALL APPLICABLE MATERIAL SAFETY DATA SHEETS, AND TECHNICAL GUIDE: PRACTICES FOR RESPIRATORY PROTECTION, COMDTINST M6260.2 (series). PERSONNEL SHALL ALSO BE FAMILIAR WITH THE ENVIRONMENTAL ISSUES ADDRESSED IN CHAPTER 3 OF THIS MANUAL.

Downloaded from http://www.everyspec.com

Area or Compartment to be Finished	Option	Surface Preparation / (Anchor Profile in mils)	Coating System	Min DFT (mils)	Notes
BILGES, COFFERDAMS, AND FOREPEAKS					
Bilges, Cofferdams, and Forepeaks, Steel	I	SSPC-SP 10/NACE No. 2 using grit conforming to MIL-A-22262 / (1.5-3.5)	1) Bilge Epoxy Coating System Primer 2) Bilge Epoxy Coating System Topcoat	6.0-7.0 6.0-7.0	1, 14, 15
	II	- or - SSPC-SP 12/NACE NO. 5, WJ-2/L			
		Non-Machinery Spaces: SSPC-SP 10/NACE No. 2 using grit conforming to MIL-A-22262 / (1.5-3.5) - or - SSPC-SP 12/NACE NO. 5, WJ-2/L - and -	1) Bilge Epoxy Coating System Primer 2) Bilge Epoxy Coating System Primer	6.0-7.0 6.0-7.0	
	III	Machinery Spaces: SSPC-SP 11 (1.0) or SSPC-SP 12/NACE NO. 5, WJ-2/L			
		Same as Option II	1) High Build Epoxy 2) High Build Epoxy	5.0-6.0 5.0-6.0	
Bilges, Aluminum			Do not paint		
BULKHEADS					
Bulkheads and Overheads, Uninsulated Aluminum	I	Power tool clean using non-metallic abrasive padding, to remove all coatings and contamination	1) High Build Epoxy 2) MIL-PRF-24596 Water Based Fire Retardant, Type I, Class 1, Grade A 3) MIL-PRF-24596 Water Based Fire Retardant, Type I, Class 1, Grade A	5.0-6.0 1.0-2.0 1.0-2.0	2, 3, 4
	II	Same as Option I	1) High Build Epoxy 2) DOD-E-24607 Chlorinated Alkyd Fire Retardant 3) DOD-E-24607 Chlorinated Alkyd Fire Retardant	5.0-6.0 1.0-2.0 1.0-2.0	
Bulkheads and Overheads, Uninsulated Steel	I	SSPC-SP 6/NACE No. 3 using grit conforming to MIL-A-22262 / (1.5-3.5)	1) High Build Epoxy 2) MIL-PRF-24596 Water Based Fire Retardant, Type I, Class 1, Grade A 3) MIL-PRF-24596 Water Based Fire Retardant, Type I, Class 1, Grade A	5.0-6.0 1.0-2.0 1.0-2.0	2, 4
	II	Same as Option I	1) High Build Epoxy 2) DOD-E-24607 Chlorinated Alkyd Fire Retardant 3) DOD-E-24607 Chlorinated Alkyd Fire Retardant	5.0-6.0 1.0-2.0 1.0-2.0	

Downloaded from http://www.everyspec.com

Area or Compartment to be Finished	Option	Surface Preparation / (Anchor Profile in mils)	Coating System	Min DFT (mils)	Notes
Bulkheads and Overheads, Uninsulated Metal- (Wet areas such as washrooms, water closets, shower space, food prep areas and exits to weather)		Steel SSPC-SP 11 (1.0) - and - Aluminum: Power tool clean using non-metallic abrasive padding, to remove all coatings and contamination	1) High Build Epoxy 2) High Build Epoxy	5.0-6.0 5.0-6.0	
Bulkheads and Overheads, Uninsulated Steel- (Appearance not a factor, i.e., voids) and Insulated Steel	I II	SSPC-SP 10/NACE No. 2 using grit conforming to MIL-A-22262 / (1.5-2.5) SSPC-SP 6/NACE No. 3 using grit conforming to MIL-A-22262 / (1.5-3.5)	1) Inorganic Zinc 1) High Build Epoxy 2) High Build Epoxy	3.0-4.0 5.0-6.0 5.0-6.0	2, 4
Bulkheads and Overheads, Uninsulated Aluminum- (Appearance not a factor) and Insulated Aluminum		Brush blast to bare metal with clean, fine aluminum oxide, garnet or equivalent inert material conforming to CID A-A-59316, Type I & IV / (1.0-1.5)	1) High Build Epoxy 2) High Build Epoxy	5.0-6.0 5.0-6.0	2
CHAIN LOCKERS					
		SSPC-SP 10/NACE No. 2 using grit conforming to MIL-A-22262 / (1.5-2.5)	1) Inorganic Zinc	3.0-4.0	4
CONDENSATION, SPACE SUBJECTED TO					
		SSPC-SP 10/NACE No. 2 using grit conforming to MIL-A-22262 / (1.5-3.5)	1) High Build Epoxy 2) Ceramic Insulation Coating 3) Ceramic Insulation Coating	5.0-6.0 10.0-15.0 10.0-15.0	5
DECKPLATES					
Deckplates, Steel		Underside and edges: SSPC-SP 10/NACE No. 2 using grit conforming to MIL-A-22262 / (1.5-2.5) Top (unpainted): Wire Brush	1) Inorganic Zinc 1) Coat with lube oil weekly and wipe off excess	3.0-4.0	4

Downloaded from http://www.everyspec.com

Area or Compartment to be Finished	Option	Surface Preparation / (Anchor Profile in mils)	Coating System	Min DFT (mils)	Notes
Deckplates, Stainless Steel/ Aluminum			Do not paint		
DECKS, METAL INTERIOR AND NON-SKID AREAS					
Steel and Aluminum Decks - wet areas, food preparation areas, exit areas, and areas subject to condensation		Steel: SSPC-SP 11 (1.0) - and - Aluminum: Power tool clean using non-metallic abrasive padding, to remove all coatings and contamination	1) High Build Epoxy 2) High Build Epoxy	5.0-6.0 5.0-6.0	16
Steel and Aluminum Decks - dry areas and low wear areas		Steel: SSPC-SP 3 - and - Aluminum: Power tool clean using non-metallic abrasive padding, to remove all coatings and contamination	1) High Build Epoxy 2) MIL-PRF-24635 Silicone Alkyd, Type II, Cl. 1	5.0-6.0 2.0-3.0	16
Metal Decks, Non-Skid Tread			1) MIL-D-17951 Tread Material	-	16, 17
DOOR, JOINER					
	I	Steel: SSPC-SP 3 - and - Aluminum: Power tool clean using non-metallic abrasive padding, to remove all coatings and contamination	1) High Build Epoxy 2) MIL-PRF-24596 Water Based Fire Retardant, Type I, Class 1, Grade A 3) MIL-PRF-24596 Water Based Fire Retardant, Type I, Class 1, Grade A	5.0-6.0 1.0-2.0 1.0-2.0	4
	II	Same as Option I	1) High Build Epoxy 2) DOD-E-24607 Chlorinated Alkyd Fire Retardant 3) DOD-E-24607 Chlorinated Alkyd Fire Retardant	5.0-6.0 1.0-2.0 1.0-2.0	

Downloaded from http://www.everyspec.com

Area or Compartment to be Finished	Option	Surface Preparation / (Anchor Profile in mils)	Coating System	Min DFT (mils)	Notes
ELECTRIC CABLE, ARMORED					
	I	Clean with Adhesion Promoter/Cleaner. Break gloss with sandpaper as required.	1) High Build Epoxy 2) MIL-PRF-24596 Water Based Fire Retardant, Type I, Class 1, Grade A 3) MIL-PRF-24596 Water Based Fire Retardant, Type I, Class 1, Grade A	5.0-6.0 1.0-2.0 1.0-2.0	4
	II	Same as Option I	1) High Build Epoxy 2) DOD-E-24607 Chlorinated Alkyd Fire Retardant 3) DOD-E-24607 Chlorinated Alkyd Fire Retardant	5.0-6.0 1.0-2.0 1.0-2.0	
ELECTRONICS EQUIPMENT					
Electronics Equipment					6
FURNITURE AND GALLEY EQUIPMENT					
	I	Steel: SSPC-SP 3 - and - Aluminum: Power tool clean using non-metallic abrasive padding, to remove all coatings and contamination	1) High Build Epoxy 2) MIL-PRF-24596 Water Based Fire Retardant, Type I, Class 1, Grade A 3) MIL-PRF-24596 Water Based Fire Retardant, Type I, Class 1, Grade A	5.0-6.0 1.0-2.0 1.0-2.0	4, 7
	II	Same as Option I	1) High Build Epoxy 2) DOD-E-24607 Chlorinated Alkyd Fire Retardant 3) DOD-E-24607 Chlorinated Alkyd Fire Retardant	5.0-6.0 1.0-2.0 1.0-2.0	
INACCESSIBLE AREAS					
Inaccessible Areas, Steel	I	SSPC-SP 10/NACE No. 2 using grit conforming to MIL-A-22262 / (1.5-2.5)	1) Inorganic Zinc	3.0-4.0	4, 8
	II	Same as Option I	1) High Build Epoxy 2) High Build Epoxy	5.0-6.0 5.0-6.0	
Inaccessible Areas, Galvanized Steel and Aluminum		Roughen mechanically or brush blast to bare metal with clean, fine aluminum oxide, garnet or equivalent inert material conforming to CID A-A-59316, Type I & IV / (1.0-1.5)	1) High Build Epoxy 2) High Build Epoxy	5.0-6.0 5.0-6.0	8

Downloaded from http://www.everyspec.com

Area or Compartment to be Finished	Option	Surface Preparation / (Anchor Profile in mils)	Coating System	Min DFT (mils)	Notes
INSULATION SURFACES					
Insulation Surfaces, Fiberglass Sheet/ Closed Cell PVC Foam	I	Clean with Adhesion Promoter/Cleaner. Break gloss with sandpaper as required.	1) MIL-PRF-24596 Water Based Fire Retardant, Type I, Class 1, Grade A 2) MIL-PRF-24596 Water Based Fire Retardant, Type I, Class 1, Grade A	1.0-2.0 1.0-2.0	4
	II	Same as Option I	1) DOD-E-24607 Chlorinated Alkyd Fire Retardant 2) DOD-E-24607 Chlorinated Alkyd Fire Retardant	1.0-2.0 1.0-2.0	
LADDERS, STAINLESS STEEL, GALVANIZED STEEL AND ALUMINUM					
			Do not paint		
MACHINERY, INTERIOR					
Machinery, Operating Temperatures Under 200°F, Unmachined surfaces		Steel: SSPC-SP 3 - and - Aluminum: Power tool clean using non-metallic abrasive padding, to remove all coatings and contamination	1) High Build Epoxy 2) MIL-PRF-24635 Silicone Alkyd, Type II, Cl. 1	5.0-6.0 2.0-3.0	9
Machinery, Steel, Operating Temperatures Over 200°F		SSPC-SP 3	1) Fed Spec TT-P-28 Heat Resisting Aluminum Paint 2) Fed Spec TT-P-28 Heat Resisting Aluminum Paint	1.0-2.0 1.0-2.0	9
PIPING, INTERIOR					
Piping, Insulated and Uninsulated, Under 200°F		SSPC-SP 3	1) High Build Epoxy 2) MIL-PRF-24635 Silicone Alkyd, Type II, Cl. 1	5.0-6.0 2.0-3.0	
Piping, Uninsulated, Over 200°F		SSPC-SP 3	1) Fed Spec TT-P-28 Heat Resisting Aluminum Paint 2) Fed Spec TT-P-28 Heat Resisting Aluminum Paint	1.0-2.0 1.0-2.0	
PLASTIC SURFACES					
		Lightly roughen; all extraneous matter shall be removed by washing with Adhesion Promoter /Cleaner. Glazed surfaces shall be sanded to promote adhesion.	1) High Build Epoxy 2) High Build Epoxy	Mist Coat 2.0-3.0	

Downloaded from http://www.everyspec.com

Area or Compartment to be Finished	Option	Surface Preparation / (Anchor Profile in mils)	Coating System	Min DFT (mils)	Notes
TANKS AND VOIDS					
Tanks and Voids, General	I	SSPC-SP 10/NACE No. 2 using grit conforming to MIL-A-22262 / (1.5-3.5)	1) MIL-PRF-23236 Fuel and/or Seawater Tanks 2) MIL-PRF-23236 Fuel and/or Seawater Tanks	5.0-8.0 5.0-8.0	10, 11, 14
	II	Same as Option I	1) MIL-PRF-23236 Fuel and/or Seawater Tanks, 100% Solids, Edge-Retentive Primer 2) MIL-PRF-23236 Fuel and/or Seawater Tanks, 100% Solids, Edge-Retentive Topcoat	Follow Manuf. Instructions	
Ballast Tanks	I	SSPC-SP 10/NACE No. 2 using grit conforming to MIL-A-22262 / (1.5-3.5)	1) MIL-PRF-23236 Fuel and/or Seawater Tanks 2) MIL-PRF-23236 Fuel and/or Seawater Tanks	5.0-8.0 5.0-8.0	10, 11, 14
	II	Same as Option I	1) MIL-PRF-23236 Ballast Tanks 2) MIL-PRF-23236 Ballast Tanks	5.0-8.0 5.0-8.0	
	III	Same as Option I	1) MIL-PRF-23236 Ballast Tanks, 100% Solids, Edge-Retentive Primer 2) MIL-PRF-23236 Ballast Tanks, 100% Solids, Edge-Retentive Topcoat	Follow Manuf. Instructions	
Fuel/JP-5 Tanks, Service, Storage, Overflow, Drain	I	SSPC-SP 10/NACE No. 2 using grit conforming to MIL-A-22262 / (1.5-3.5)	1) MIL-PRF-23236 Fuel and/or Seawater Tanks 2) MIL-PRF-23236 Fuel and/or Seawater Tanks	5.0-8.0 5.0-8.0	10, 11, 14
	II	Same as Option I	1) MIL-PRF-23236 Fuel and/or Seawater Tanks, 100% Solids, Edge-Retentive Primer 2) MIL-PRF-23236 Fuel and/or Seawater Tanks, 100% Solids, Edge-Retentive Topcoat	Follow Manuf. Instructions	
Grey Water, Sewage, and CHT Tanks	I	SSPC-SP 10/NACE No. 2 using grit conforming to MIL-A-22262 / (1.5-3.5)	1) MIL-PRF-23236 Fuel and/or Seawater Tanks 2) MIL-PRF-23236 Fuel and/or Seawater Tanks -or-	5.0-8.0 5.0-8.0	10, 11, 14
	II	Same as Option I	1) MIL-PRF-23236 Grey Water, Sewage, and CHT Tanks 100% Solids, Edge-Retentive 2) MIL-PRF-23236 Grey Water, Sewage, and CHT Tanks 100% Solids, Edge-Retentive	Follow Manuf. Instructions	
Lube Oil and Fuel Tanks, Unballasted with Water Extraction Systems		For new construction, remove mill scale with steel shot	Apply a heavy coat of lube oil		

Downloaded from http://www.everyspec.com

Area or Compartment to be Finished	Option	Surface Preparation / (Anchor Profile in mils)	Coating System	Min DFT (mils)	Notes
Tanks, Potable Water		Steel: SSPC-SP 10/NACE No. 2 using grit conforming to MIL-A-22262 / (1.5-3.5) Aluminum: Brush blast to bare metal with clean, fine aluminum oxide, garnet or equivalent inert material conforming to CID A-A-59316, Type I & IV / (1.5-2.5)	Potable Water Tank Coating-NSF Approved (See manufacturer's product data sheets for number of coats to achieve total specified DFT) - or - Potable Water Tank Coating-NEHC Approved (three contrasting coats required)	10.0-12.0 (Total) 8.0-12.0 (Total)	12, 13
TRANSDUCER HULL RINGS					
Interior Surfaces		Same surface preparation as the Bilge	Use the same coating system as the Bilge		
WOOD, INTERIOR					
Wood, Painted Interior	I	Remove any loose paint by scraping, sanding, or milling the surface. Apply commercial wood paste filler as necessary to fill dents, holes, and cracks. Allow 18 hrs for drying.	1) High Build Epoxy 2) MIL-PRF-24596 Water Based Fire Retardant, Type I, Class 1, Grade A 3) MIL-PRF-24596 Water Based Fire Retardant, Type I, Class 1, Grade A	5.0-6.0 1.0-2.0 1.0-2.0	
	II	Same as Option I	1) High Build Epoxy 2) DOD-E-24607 Chlorinated Alkyd Fire Retardant 3) DOD-E-24607 Chlorinated Alkyd Fire Retardant	5.0-6.0 1.0-2.0 1.0-2.0	
Wood, Stained and Varnished Interior		Remove varnish as necessary by scraping or sanding. Sand surface smooth, wipe clean.	1) Fed Spec TT-S-711 Interior Wood Stain 2) CID A-A-1800 Spar Varnish 3) CID A-A-1800 Spar Varnish 4) CID A-A-1800 Spar Varnish	- 1.0-2.0 1.0-2.0 1.0-2.0	

Downloaded from http://www.everyspec.com

Notes

1. Bilges susceptible to ballast damage shall be coated with 20 mils of Amerlock 400 or other equivalent Anti-Abrasion coating.

2. Intumescent coatings are no longer considered to be an acceptable substitute for currently used fire insulation. They are no longer required to be used on either insulated or uninsulated sides of fire zone bulkheads. Insulated sides of firezone bulkheads shall continue to be protected by fire insulation as directed by the Naval Engineering Manual, COMDTINST M9000.6 (series). All other areas previously specified to be coated with intumescent paint shall no longer require intumescent paint. These areas shall be coated to match their surrounding areas when re-coating is required. Intumescent paint must be removed in any area where it is incompatible with newly applied coatings.

3. Paint aluminum only as required to prevent corrosion. Always prime aluminum before painting to avoid paint failure.

4. Water-based coatings may only be applied when ambient air and substrate temperature are above 50 degrees F., in order for the water to evaporate completely and form a continuous coating. Water-based coatings will not dry at relative humidity above 80 percent.

5. These coating systems shall not be used to replace thermal or anti-sweat insulation on any piping systems.

6. In general, electronics equipment shall not be painted in the field. Minor touch ups of exposed surfaces may be made using the instructions provided in the equipment technical or service manual. Paint of original matching color shall be used. Information on the proper paint and color can be obtained from the manufacturer. In cases where the equipment requires complete repainting, arrangements shall be made with the servicing MLC Electronics Support Unit.

7. Corrosion resistant steel furniture and galley equipment, decorative plastic surfaces such as those on table tops, porcelain surfaces and interior bright aluminum furniture and galley equipment are not to be painted.

8. All inaccessible voids that bear against the shell shall be welded tight, tested for tightness, and treated by filling and draining with a rust preventive compound conforming to MIL-PRF-16173, Grade 3. These include rudders, skegs, sealed void spaces at the stem and voids in the bilges or voids constantly exposed to salt water.

9. Working metal surfaces shall not be painted. They shall be coated with a Solvent Cutback Corrosion Preventive Compound, MIL-PRF-16173, Grade 3, or Thin Film Corrosion Preventive Compound, MIL-C-81309, Type II, Class 1.

10. Drying times between coats and final system cure for specified tank coatings other than potable water tanks shall be in accordance with manufacturer's recommendations.

11. Use a coating system qualified to MIL-PRF-23236 Grade A when storing, applying, and curing at a temperature range of 20 to 50 degrees F. Use a coating system qualified to MIL-PRF-23236 Grade B when storing, applying, and curing at a temperature range of 51 to 100 degrees F.

12. All potable water tank coatings must be approved by either the National Sanitation Foundation (NSF) or Naval Environmental Health Center (NEHC).

Downloaded from http://www.everyspec.com

13. Drying time between coats for potable water tank coatings, including stripe coat, shall be not less than 24 hours at a minimum temperature of 77 degrees F. Final system curing prior to putting tanks back in service shall be not less than 7 days at a minimum temperature of 77 degrees F.

14. Stripe coat is required on all edges, welds, corners, crevices, etc. after the initial primer coat.

15. Option I - Bilge Epoxy Coating System Primer/Topcoat is the best performing system and shall be used for all new construction. Due to a short pot life, optimal application of the Bilge Epoxy Coating System Topcoat is done using plural component spray equipment and is not recommended for application outside of an industrial level activity. Option II with two coats of Bilge Epoxy Coating System Primer should be used at unit and intermediate maintenance level activities where plural component spray equipment is not available. Use Option III with two coats of High Build Epoxy when moisture tolerance is not required and High Build Epoxy systems have performed adequately in the past.

16. Steel decks subject to abuse like cargo holds may be coated with inorganic zinc (see Note 4) as specified for chain lockers.

17. Place self-adhesive MIL-D-17951 Tread Material on clean metal deck surfaces that have already been prepared and painted in accordance with their usage, i.e., wet areas/food preparation areas/exit areas/areas subject to condensation or dry areas/low wear areas. The coarse Slip Resistant Sheet material may be used in place of MIL-D-17951 in areas where greater durability and performance are needed.

Downloaded from http://www.everyspec.com

This page left intentionally blank.

Downloaded from http://www.everyspec.com

APPENDIX C. COATINGS AUTHORIZED FOR USE ON CUTTERS AND BOATS

A. Paint and Coating Approval Procedures.

1. Ships operated by the United States Coast Guard may experience operating conditions significantly more demanding than those seen by their Navy or commercial counterparts. Coatings that perform suitably in those applications may fail prematurely in CG service, leading to excessive recoating and maintenance costs. For these reasons, the CG has established its own list of approved coatings, and this list is included in Section 5 of this Appendix C. The CG accepts military specification (mil spec) and Qualified Products List (QPL) coatings for those applications and areas where their past performance has been acceptable. However, constant advances in coating technology create new, high-performance coatings that are likely to produce significant performance enhancement and/or cost savings. Therefore the CG has also approved commercial coatings for those applications and areas where Mil-Spec/QPL coatings have not performed well, and has placed them on the list of approved coatings.

2. All requests from manufacturers for coating approvals shall be directed to the Office of Naval Engineering (G-SEN) for approval. The address is:

   Commandant (G-SEN)
   United States Coast Guard
   2100 Second Street SW
   Washington, DC 20593

3. Requests for approval shall be for complete systems, from the first coating on the substrate to the topcoat. If the requesting manufacturer does not produce all of the required components for a system, acceptable products from other manufacturers should be listed. Requests from manufacturers for coating approvals shall be submitted in writing and shall include:

   a. A point of contact within the company, including title, street address, phone, fax, and e-mail.

   b. A brief description of the system, e.g., the intended use of the coating system, the number of separate coatings, and for each coating its name, chemical type, requirements for surface preparation, mixing, application, and thickness, and the minimum and maximum times for drying, intervals between coats, and recoating.

   c. A Product Data Sheet for each of the coatings in the coating system.

   d. A Material Safety Data Sheet for each of the coatings in the coating system.

   e. Other federal approvals of the system or its components, such as mil spec. QPL, U. S. Maritime Administration (MARAD), or Military Sealift Command (MSC).

   f. Additional relevant information, such as state and local approvals and certifications, and results of laboratory and accelerated tests.

4. The following are requirements for all coatings in CG service:

   a. EPA registration for antifouling coatings.

Downloaded from http://www.everyspec.com

b. Approval from the Naval Environmental Health Center (NEHC), Norfolk, VA or from NSF International (formerly the National Sanitation Foundation), Ann Arbor, MI for potable water tank coatings.

c. Volatile Organic Content (VOC) limits of 400 grams/Liter for antifouling coatings and 340 g/L for all other coatings.

5. The following are banned from CG service.

a. Coatings containing lead. (Lead-free is defined in 16 CFR 1303-Ban of Lead-Containing Paint and Certain Consumer Products Bearing Lead-Containing Paint as 0.06% or less lead by weight in the dry paint film.)

b. Coatings containing coal-tar derivatives.

c. Coatings containing hexavalent chromium compounds, for example, zinc chromate and other chromates.

d. Antifouling coatings containing organotin compounds, for example, tributyl tin (TBT).

e. Coatings containing asbestos.

6. Written notice of product approval will be sent to the manufacturer's point of contact, and to the Coast Guard Maintenance Logistics Centers. The product will be added to the list of approved coatings in the next revision of this Manual.

7. Approvals are subject to revocation should it be determined that the coating is not performing satisfactorily.

8. Manufacturers are advised that all laboratory testing shall be the manufacturer's responsibility and cost. The CG reserves the right to send a representative to any test site to inspect test panels, test setups, test equipment, data sheets, etc. at any time during test periods.

B. Approval for Reformulated Products. When a manufacturer reformulates a product previously approved by the CG, the manufacturer shall submit, in addition to the data stipulated in section C.A.3 above, a letter explaining what has been changed and the reasons for the change. The CG will determine what steps will be necessary to extend approval. A reformulated coating must have a different product name or number than the originally approved product.

C. Approval for Renamed Products. When a manufacturer renames a product previously approved by the CG, and the change is in name or number only, not composition, the CG will extend approval to the product under its new name, provided that the manufacturer:

1. Submits written notification to the CG of the change in name or number.

2. Warrants that the formulation has not changed.

3. Submits the data required by section C.A.3.

Downloaded from http://www.everyspec.com

D. Generic Material Class Performance Requirements.

1. Adhesion Promoter/Cleaner. A water-based alkaline cleaner for use in preparation for painting. It is intended for use on fiberglass and closed-cell polyvinyl chloride (PVC) insulation, painted and plastic surfaces, and bare metal. An equivalent material to the products specified herein shall meet the following criteria:

   a. Water-based cleaner.

   b. Promotes adhesion between substrate and paint and between coats of paint.

   c. Contains no phosphates, halogens, chlorinated solvents or petroleum distillates, and is biodegradable.

   d. Leaves no residue when rinsed with fresh water.

2. Anti-Abrasion Coating, Ice Breaker, <235'. A coating with extremely high resistance to abrasion that is intended for use on the bow and forward portions of icebreaker hulls and is suitable for use in salt and fresh water. An equivalent coating to the products specified herein shall meet the following criteria:

   a. Proven record (at least three years) of usage as an underwater coating for non-polar icebreakers.

   b. Abrasion resistant, anti-corrosive epoxy, with a minimum of 50% solids.

   c. Available in a minimum of two colors, one of which must be red.

   d. Applicable in a minimum of two coats, with a total thickness of not less than 14 mils mean dry film thickness.

   e. Other salient characteristics:

      (1) Abrasion resistance, Taber (ASTM D4060, 1 kg, CS-17 wheel): 50 mg weight loss max.

      (2) Adhesion, Elcometer (ASTM D4541): 1000 psi min.

3. Anti-Abrasion Coating, Ice Breaker, >235'. A coating with unusually high resistance to abrasion that is intended for use on the bow and forward portions of polar icebreaker hulls. It will have low adhesion to ice and low frictional resistance. An equivalent coating to the products specified herein shall meet the following criteria:

   a. Proven record (at least three years) of usage as an underwater coating for polar icebreakers.

   b. Can operate in temperatures as low as -60 degrees F.

   c. Abrasion resistant, anti-corrosive epoxy, with a minimum of 90% solids.

   d. Available in a minimum of two colors, black and red.

   e. Applicable in a single coat with a total thickness greater than 30 mils mean dry film thickness.

Downloaded from http://www.everyspec.com

f. Other salient characteristics:

(1) Abrasion resistance, Taber (ASTM D4060, 1 kg, CS-17 wheel): 50 mg weight loss max.

(2) Adhesion, Elcometer (ASTM D4541): 1000 psi min.

(3) Kinetic friction coefficient with ice less than 0.03 at velocities ranging from 10 to 25 cm/s.

4. Antifoulant, Non-copper. An antifouling coating that contains biocides for prevention of marine growth and is compatible with aluminum hulls. An equivalent coating to the products specified herein shall meet the following criteria:

a. Received EPA registration.

b. Contains no materials that can cause galvanic corrosion of aluminum.

c. Has a proven record (at least two years) of use as an underwater aluminum hull coating system.

d. Has equal or better resistance to mechanical damage from blunt objects than conventional antifouling systems.

5. Bilge Epoxy Coating System. An anti-corrosive epoxy coating system for application in bilges and forepeaks with a primer that can be applied to wet or damp surfaces and an edge retentive topcoat. An equivalent coating system to the products specified herein shall meet the following criteria:

a. Applicable by brush, roller, or spray.

b. No dew point restrictions - applicable at relative humidity of 10% to 100%.

c. It can be applied on waterjetted surfaces with minimum conditions as follow:

a. SSPC-SP 12/NACE No. 5
   i. Visual Surface Preparation: WJ-3
   ii. Nonvisual Surface Preparation: SC-2
b. SSPC-VIS 4/NACE VIS 7: Moderate Flash Rusting (M)

d. Essentially 100% solids and few or no VOCs.

e. Edge retentive.

f. Non-flammable.

g. Good chemical resistance.

h. Proven record (a minimum of two years) of use as a bilge/forepeak system.

Downloaded from http://www.everyspec.com

6. Fouling Release System. A nontoxic coating for boat hulls that resists attachment of fouling. The coating has a low-energy surface, and its primary mechanism for releasing fouling does not rely on dissolving, polishing, eroding, or reducing in thickness. An equivalent coating to the products specified herein shall meet the following criteria:

   a. The coating, applied and cured as directed by the manufacturer, shall be allowed to foul for 30 days in subtropical waters. When exposed to flowing seawater at 22 knots for 30 minutes, the coating shall release at least 80% of the settled fouling. The area covered by residual fouling shall be measured and recorded. This cycle shall be repeated six times. At the conclusion of each cleaning, the area covered by residual fouling shall not be greater than at any previous cleaning.

   b. Have received EPA concurrence that registration is not required.

   c. Easily cleaned by low pressure washing (<1000 psi) or by light wiping with sponges or soft cloth.

7. High Build Epoxy. A two-component epoxy coating intended for general use as an all-purpose high-performance coating that is qualified for use under MIL-PRF-23236 or as an anticorrosive under MIL-PRF-24647. All colors are authorized for general use.

8. High Turbulence Coating. A coating that resists removal under turbulent conditions which is used as a topcoat to protect against cavitation erosion on appendages of the underwater body of ships, especially structures aft of the propeller such as the rudder, struts and fins. An equivalent coating to the products specified herein shall meet the following criteria:

   a. Proven record (a minimum of three years) of use as a coating system for high turbulent/cavitation-prone surfaces.

   b. Other salient characteristics:

      (1) Maximum rate of cavitation erosion (modified ASTM G32): 40 micrometers/hour

      (2) Nominal incubation time (modified ASTM G32): 30 minutes minimum

9. Inorganic Zinc. A self-curing, inorganic zinc-rich primer for use on properly prepared steel surfaces. This high-solids, VOC-compliant, inorganic zinc-rich primer protects steel galvanically and halts sub-film corrosion. When damaged, it continues to protect the underlying steel by cathodic protection. It will withstand severe weather conditions and aggressive exposures. This primer may be top-coated or used without topcoat, for instance, on buoy decks. An equivalent coating to the products specified herein shall meet the following criteria:

   a. Although optimal relative humidity may be higher, the coating must be able to cure at a relative humidity down to 50%.

   b. Other salient characteristics:

      (1) Color: Gray (Green-Gray is acceptable)

      (2) Metallic zinc content: 80% minimum by weight in dry film

Downloaded from http://www.everyspec.com

(3) Adhesion (ASTM D4541): 1000 psi min

(4) Flexibility: No cracks when bent 180º over a 1-inch mandrel

(5) Impact resistance (ASTM D2764): 60 inch-pounds min.

10. Organic Zinc. An epoxy-type anticorrosive primer for use on properly-prepared steel surfaces exposed to severe industrial or marine environments. This primer must be top-coated to attain maximum protective qualities. An equivalent coating to the products specified herein shall meet the following criteria:

a. Applicable by brush, roller, or spray.

b. Other salient characteristics:

(1) Metallic zinc content: 80 % by weight minimum in dry film

(2) Adhesion (ASTM D4541): 1000 psi min.

(3) Flexibility: No cracks when bent 180º over a 1-inch mandrel

(4) Impact resistance (ASTM D2764): 60 inch-pounds min.

(5) Surface tolerance: Manufacturer will warrant performance on surfaces cleaned by water-jet to WJ-2 and SC-2 standards

11. Polysiloxane System. Topside coating system featuring a durable polysiloxane coating with superior gloss and color retention that is used as the topcoat for exterior applications. On steel, the polysiloxane system consists of the polysiloxane topcoat that is applied to a zinc rich primer, or a zinc rich primer with an epoxy mid-coat, or an epoxy primer, or direct to metal. A coating equivalent to the polysiloxane topcoat products specified herein shall meet the following criteria:

a. It can be applied to bare or primed steel, galvanized steel, aluminum, epoxy primer, glass reinforced plastic, organic zinc primer, and inorganic zinc silicate primer.

b. Primer must be able to be applied to a waterjetted surface.

c. Can be applied by brush, roller, or spray.

d. Other salient characteristics:

(1) Elongation (ASTM D522): 10 % minimum

(2) Impact resistance (ASTM D2794): 80 inch-pounds min.

(3) Adhesion (Elcometer, ASTM D4541): 1600 psi min.

(4) Taber Abrasion (ASTM D4060, CS-17 wheel, 1 kg load, 1000 cycles): 90 mg max.

(5) 60º Gloss retention (2000 hrs QUV): 10 gloss units max. Color change (1000 hours QUV): 3 CIELAB units max.

Downloaded from http://www.everyspec.com

12. Potable Water Tank Coating. An epoxy-type coating suitable for use in tanks and pipes that contain drinking water. The coating is also suitable for use in food processing facilities. An equivalent coating to the products specified herein shall meet the following criteria:

    1. The coating must be certified to meet the current National Primary and Secondary Drinking Water Regulations issued by the US Environmental Protection Agency. The coating shall be certified by the Naval Environmental Health Center (NEHC), Norfolk, VA or by NSF International (formerly the National Sanitation Foundation), Ann Arbor, MI.

    2. Other salient characteristics:

        (1) Adhesion (ASTM D4541): 500 psi minimum

        (2) Abrasion resistance (ASTM D4060, CS 17 wheel, 1 kg weight, 1000 cycles): 200 mg maximum

        (3) Chemical resistance (ASTM D714): No deterioration in 20% sodium hydroxide, 3% sodium chloride, 3% sulfuric acid, and gasoline (nonmethanol)

        (4) Material extracted by drinking water: Certification to ANSI/NSF Std 61

13. Rust Deoxidizing Primer. A primer for temporary repair of steel when optimum surface preparation is not practical. The primer encapsulates existing rust and delays formation of additional rust. An equivalent coating to the products specified herein shall meet the following criteria:

    a. Serving as a primer, it must be compatible with High Build Epoxy and Polysiloxane.

    b. Other salient characteristics:

        (1) Recoat time: At least 18 hours at 25 ºC

        (2) Service life: Six months minimum

14. Slip Resistant Sheets. Slip resistance is provided by sheets of abrasive particles held in a tough, durable binder to a film backing. The reverse side is covered with a pressure-sensitive adhesive and a removable protective liner. The self-adhesive sheets are used with an edge sealer on properly-primed steel or aluminum exterior surfaces on cutters and boats to provide traction to men and equipment under wet and dry conditions. An equivalent self-adhesive material to the products specified herein shall meet the following criteria:

    a. Color: Black

    b. Adhesion (MIL-PRF-17951)

        (1) Shear strength (7 days aging) 10 pounds minimum

        (2) Strip strength: 0.75 pounds minimum

Downloaded from http://www.everyspec.com

c. Minimum coefficient of friction (MIL-PRF-17951)

(1) Static (Rubber): 1.2 dry, 1.2 wet, 0.9 oily

(2) Static (Leather): 1.1 dry, 1.1 wet

(3) Dynamic (Rubber): 1.2 dry, 1.2 wet, 0.8 oily

(4) Dynamic (Leather): 0.9 dry, 1.1 wet

(5) Service Life: 30 months

(6) Proven record (a minimum of two years) of use as a slip resistant system for ship/boat weather decks operating in rough ocean seas.

E. CG Approved Coatings/Materials.

1. Generic Categories

General Material Class	Coating	FED-STD-595 Color
ADHESION PROMOTER/CLEANER (Use following or similar material.)		
	Ameron Prep 88	-
ANTI-ABRASION COATING, ICEBREAKER, SALT WATER <350' AND FRESH WATER		
	Ameron Amerlock 400	Gray / Red
	Ameron Amercoat 238	Black / Red
	International Intershield 350 (KZA 350/KZA 352 / KZA 351) – (For immersed areas, the first coat must be KZA 350-Silver Gray)	Silver Gray / Black / Red
ANTI-ABRASION COATING, ICEBREAKER, SALT WATER >350'		
	International Intershield 163 Inerta 160 (ERA163/ ERA 160)	Black / CG Red
ANTIFOULANT, NON-COPPER		
	E Paint SN-1	Black / White / Gray
	NSNs: 8010-01-505-4219 1 Gal. GL 8010-01-505-4221 5 Gal. CN	Black
	8010-01-505-4223 1 Gal. GL 8010-01-505-4224 5 Gal. CN	White
	8010-01-505-4225 1 Gal. GL 8010-01-505-4226 5 Gal. CN	Gray
ANTI-SEIZE COMPOUND (**CID A-A-59313** may also be used.)		
	Ultra Safety Systems Ultra Tef-Gel (NSN: 8030-01-450-4009 / 1.0 oz / EA)	-
BILGE EPOXY COATING SYSTEM		
Primer	Euronavy Eurobasic ES301K (Temp. >59 deg F) - or - Euronavy Eurobasic ES301L (Temp. from 41-59 deg F)	Light Gray, Dark Gray, Red Oxide, Light Green (White can only be used as topcoat, not as a primer)

Downloaded from http://www.everyspec.com

General Material Class	Coating	FED-STD-595 Color
Topcoat	Euronavy EuroGuard ES301S (Not recommended for application at unit or intermediate maintenance level activities due to short pot life.)	Light Grey, Red Oxide
Primer/Topcoat	International Interbond 998	Off-White, Haze Gray, Terracotta Red
CERAMIC INSULATION COATING		
	Span-World Temp-Coat Type "F"	White
DIELECTRIC SHIELD FAIRING COMPOUND		
	U.S. Filter/Electrocatalytic Capastic	Olive Green
	Somay Hycote 461 (Underwater repair only)	Black
FOULING RELEASE SYSTEM		
	International Intersleek System	
	Intergard 264 (FPL 274-FPA 327 / FPJ 034-FPA 327)	Red / Gray
	Intersleek 381 Tie Coat (BXA380/BXA381)	Light Pink
	Intersleek 425 Finish (BXA 819/BXA821/BXA 822)	Black
HIGH BUILD EPOXY (General purpose epoxies from MIL-PRF-24647 anti-corrosives and MIL-PRF-23236)		
	Ameron Amercoat 230	Various
	Ameron Amercoat 235	Various
	Ameron Amercoat 236	Various
	Ameron Amercoat 385	Various
	Hempel Hempadur 45141/45143	Various
	Hempel Hempadur 45150	Various
	International Intergard (264) FP Series	Various
	International Intertuf (262) KH Series	Various
	NCP NBR 235	Various
	Sherwin-Williams Duraplate 235 B67-235 Series/B67V235	Various
	Sherwin-Williams Epoxy P23 Series/P23VQ80	Various
HIGH TURBULENCE COATING		
	Ameron Amercoat 238	Black / Red
	Ameron Amerlock 400	Black / Red
	Hempel Hempadur MultiStrength 35530	Black / Red
	Somay Hycote 151 Epoxy (Can be applied underwater)	Black / Red
	Somay Hycote 165 Epoxy	Black / Red
	International Interzone 1000	Black / Red
	Jotun Marathon	Black / Red
INORGANIC ZINC (DOD-P-24648 inorganic zinc may also be used)		
	Ameron Dimetcote 9HS	Green
	Hempel Galvosil 15680-19830	Gray
	Sherwin-Williams Zinc Clad IIHS B69VZ1/ B69VZ3/B69D11	Gray-Green

Downloaded from http://www.everyspec.com

General Material Class	Coating	FED-STD-595 Color
ORGANIC ZINC		
	Ameron Amercoat 68HS	Red-Gray
	Hempel Hempadur 17360-19830	Red-Gray
	International Interzinc 75V (EPA075V)	Red
	Jotun Barrier MZ-4 / V13F4	Yellow-Green
	Sigma Sigmacover Zinc Primer II 7402	Red-Brown
PAINT REMOVER/STRIPPER (Use following or similar material.)		
	Dumond Chemical, Inc. Peel-Away 7	-
POLYSILOXANE SYSTEM		
Zinc Rich Primer		
	Ameron Dimetcote 302H	Green
	International Interzinc 52	Green
Epoxy Primer/Mid-Coat		
	Ameron Amerlock 2 (Temp. <90 deg F)	Various
	Ameron Amerlock 400 (Temp. >90 deg F)	Various
	International Intergard (264) FP Series	Various
Polysiloxane		
	Ameron PSX-700FD(Faster Dry Cure - Temp.<90 deg F)	Various
	Ameron PSX-700 (Standard Cure - Temp. >90 deg F)	Various
	International Interfine 979	Various
POTABLE WATER TANKS (Must be NSF or NEHC approved)		
	Ameron Amercoat 133 (NSF approved ≥ 1000 gal. with 10 day cure) (NSF approved ≥ 50 gal. with 14 day cure)	Off-white/Red
	Ameron Amercoat 233ER (NSF approved ≥ 1000 gal.)	Buff/Light Blue/Off-White
	Ameron Amerlock 400 (NSF approved ≥ 1000 gal.)	Ivory/ Medium Gray/ RT-1805 Blue/ White
	International 5747/5748 (Primer) (NEHC approved) International 5753/5754 (Topcoat)	Green White
	International Interseal 670HS (NSF approved ≥ 100 gal. with 14 day cure)	White LTC/Buff LTC/White/SPX Blue/Buff/Black LTC/Black/Blue LTC
	Sherwin-Williams (NEHC approved) Tankguard No. 1 N11G100/N11V100 Tankguard No. 3 N11L100/N11V101	 Green Blue
	Sherwin-Williams Dura-Plate 235 (NSF approved ≥ 1000 gal.)	Buff/ Off-White
	Sherwin-Williams Dura-Plate UHS (NSF approved ≥ 1000 gal.) Primer: B62H210 with B62V210 or B62V211 cure Topcoat: B62W210 with B62V210 or B62V211 cure	 Gold White
	Sigma Sigmaguard CSF 85 (NSF approved ≥ 1000 gal.)	Blue/ White
RUST DEOXIDIZING PRIMER (Use following or similar material.)		
	Total Rust and Corrosion Control RDP (NSN: 8030-01-356-8690 / 5 gal / CO)	-

Downloaded from http://www.everyspec.com

General Material Class	Coating	FED-STD-595 Color
SLIP RESISTANT SHEETS		
	3M Safety-Walk 710 Coarse Slip Resistant Surfacing (authorized for all cutters and boats)	Black
	3M Safety-Walk 610 General Purpose Slip Resistant Surfacing (authorized for maintenance of existing 610 systems only)	Black
	3M Safety-Walk Primer	-
	3M Safety-Walk Edge Sealing Compound No. 5569	-
SYNTHETIC WOOD FINISH (Use following or similar material.)		
	Akzo Nobel Sikkens Cetol Marine	Satin
	Akzo Nobel Sikkens Cetol Marine Gloss	Gloss Overcoat
	Flood Deks Olje #1	Matte
	Flood Deks Olje #2	Gloss Overcoat

2. Military/Federal Specification. Although National Stock Numbers are provided for convenience, any products that are listed on the Qualified Products List (QPL) for a given military/federal specification may be used. If there is no QPL for a given military/federal specification, any product certified as meeting all requirements of that specification may be used.

MIL-SPEC	Coating	FED-STD-595 Color	National Stock No.	Quantity	U/I
FED SPEC TT-P-28 ALUMINUM HEAT RESISTING PAINT					
	1200°F nominal	Aluminum	8010-01-344-5121	1.0 gal	GL
	1200°F nominal	Aluminum	8010-01-344-5122	5.0 gal	CN
FED SPEC TT-R-248 PAINT AND LACQUER REMOVER, SOLVENT TYPE (Inactive, but still available through GSA or use commercial equivalent)					
		-	8010-00-943-7128	1.0 gal	GL
		-	8010-00-515-2258	5.0 gal	CN
FED SPEC TT-F-340 PLASTIC WOOD FILLER (Cancelled, but still available through GSA or use commercial equivalent)					
		Natural	8030-00-262-9171	4.0 oz	CN
		Natural	8030-00-262-9172	1.0 lb	LB
		Light Mahogany	8030-00-664-7077	4.0 oz	CN
		Walnut	8030-00-664-7088	4.0 oz	CN
FED SPEC TT-S-711 STAIN, OIL TYPE, WOOD, INTERIOR (Cancelled, but still available through GSA or use commercial equivalent)					
		Cherry	8010-00-165-4422	1.0 qt	QT
		Dark Mahogany	8010-00-281-2075	1.0 gal	GL
		Dark Oak	8010-00-165-8628	1.0 qt	QT
		Dark Oak	8010-00-281-2072	1.0 gal	GL
		Dark Walnut	8010-00-281-2076	1.0 gal	GL
		Light Oak	8010-00-597-8226	1.0 qt	QT
		Light Oak	8010-00-166-0746	1.0 gal	GL
		Light Walnut	8010-00-281-2074	1.0 gal	GL

Downloaded from http://www.everyspec.com

MIL-SPEC	Coating	FED-STD-595 Color	National Stock No.	Quantity	U/I
		Mahogany	8010-00-161-7264	1.0 pt	PT
		Mahogany	8010-00-165-8627	1.0 qt	QT
		Maple	8010-00-281-2077	1.0 qt	QT
		Maple	8010-00-598-7669	1.0 gal	GL
		Red Mahogany	8010-00-281-2071	1.0 gal	GL
		Walnut	8010-00-597-8225	1.0 gal	GL
CID A-A-1800 SPAR VARNISH OIL (Cancelled, but still available through GSA or use commercial equivalent)					
		-	8010-01-497-9756	1.0 pt	PT
		-	8010-00-597-7856	1.0 gal	GL
		-	8010-00-251-6980	5.0 gal	CN
MIL-PRF-16173 CORROSION PREVENTION COMPOUNDS, SOLVENT CUTBACK, COLD APPLICATION, THIN FILM					
	Grade 3, Soft Film, Water Displacing	-	8030-00-244-1296	1.0 gal	GL
	Grade 3, Soft Film, Water Displacing	-	8030-00-244-1293	5.0 gal	CN
MIL-D-17951 DECK COVERING, LIGHTWEIGHT NONSLIP (TREAD MATERIAL)					
	6.0" Width, 24.0" Length	Black	7220-00-205-0389	-	EA
MIL-R-19907 GLASS REINFORCED PLASTIC LAMINATE (FIBERGLASS) REPAIR KIT					
		-	2090-00-372-6064	-	KT
MIL-PRF-23236 COATING SYSTEMS, FOR SHIP STRUCTURES					
Fuel and/or Seawater Tanks (applied at temperatures > 50°F) (Type IV, V, or VI/Class 5/Grade C)					
	Ameron Amercoat 236	-	-	-	-
	International Intergard 264 FPA327	-	-	-	-
	International Interline 604 THA660 Series	-	-	-	-
	Sherwin Williams N11-100 Series	-	-	-	-
Fuel and/or Seawater Tanks (applied at temperatures 32 °F to 50°F) (Type IV, V, or VI/Class 5/Grade B)					
	International Intergard 264 FPA321	-	-	-	-
Ballast Tanks (applied at temperatures > 50°F) (Type IV, V, or VI/Class 7/Grade C)					
	Ameron Amercoat 235	-	-	-	-
	Ameron Amercoat 385	-	-	-	-
	International Intergard 403 KB Series	-	-	-	-
	International Intertuf 262 Series KHA Series	-	-	-	-
	NCP NBR 235	-	-	-	-
	Sherwin Williams Duraplate 235	-	-	-	-
Ballast Tanks (applied at temperatures 32 °F to 50°F) (Type IV, V, or VI/Class 7/Grade B)					
	International Intertuf 262 Series KHA Series	-	-	-	-
Fuel and/or Seawater Tanks, 100% Solids, Edge-Retentive (applied at temperatures > 50°F) (Type VII/Class 5 /Grade C)					
	International Interline 624	-	-	-	-
	Sherwin-Williams Primer: Dura-Plate UHS B62H210/B62V210 Sherwin-Williams Topcoat: Dura-Plate UHS B62W210/ B62V210	 Red White	 - 8010-01-467-5599	 - 5.0 gal	 - KT

Downloaded from http://www.everyspec.com

MIL-SPEC	Coating	FED-STD-595 Color	National Stock No.	Quantity	U/I
	Dura-Plate UHS B62G210/ B62V210	Green	8010-01-467-6308	5.0 gal	KT
	Sherwin Williams FastClad ER	-	-	-	-
	Sigma Primer/Stripecoat/Topcoat:				
	Edgeguard 5427	Cream	-	-	-
	Edgeguard 5428	White	-	-	-
	Edgeguard 5428-5000	Gray	-	-	-
	Sherwin Williams Primer:				
	Nova-Plate UHS B62H220/B62V220	Buff	-	-	-
	Sherwin Williams Stripecoat/Topcoat:				
	Nova-Plate UHS B62A220/B62V220	Gray	-	-	-
	Nova-Plate UHS B62W220/ B62V220	White	-	-	-
	Nova-Plate UHS B62W220/ B62G220	Green	-	-	-
Ballast Tanks, 100% Solids, Edge-Retentive (applied at temperatures > 50°F) (Type VII/Class 7/Grade C)					
	Ameron Primer:				
	Amercoat 133	Off-white/Red	-	-	-
	Ameron Stripecoat/Topcoat:				
	Amercoat 333		-	-	-
	International Primer:				
	Intergard 143 (THA 141/THA 148)	Pink	-	-	-
	International Stripecoat/Topcoat:				
	Intergard 143 (THA 143/THA 148)	Buff	-	-	-
	Intergard 143 (THA 144/THA 148)	Gray	-	-	-
	Sherwin-Williams Primer:				
	Seaguard 5001 Epoxy Primer N11-200	Red	8010-01-467-5597	2.0 gal	KT
	Seaguard 5001 Epoxy Primer N11-200	Red	8010-01-467-5598	10.0 gal	KT
	Sherwin-Williams Topcoat:				
	Dura-Plate UHS B62W210/ B62V210	White	8010-01-467-5599	5.0 gal	KT
	Dura-Plate UHS B62G210/ B62V210	Green	8010-01-467-6308	5.0 gal	KT
	Sigma Primer:				
	Sigmaguard BT Primer 5404	Amber	8010-01-470-7107	1.0 gal	KT
	Sigmaguard BT Primer 5404	Amber	8010-01-470-7113	5.0 gal	KT
	Sigma Stripecoat/Topcoat:				
	Sigma Sigmaguard BT 5411-5000	Gray	8010-01-470-8105	1.0 gal	KT
	Sigma Sigmaguard BT 5411-5000	Gray	8010-01-470-7126	5.0 gal	KT
	Sigma Sigmaguard BT 5411-S674	Aqua Green	8010-01-470-8108	1.0 gal	KT
	Sigma Sigmaguard BT 5411-S674	Aqua Green	8010-01-470-8110	5.0 gal	KT
	Sigma Sigmaguard BT 5411-7000	White	8010-01-470-7129	1.0 gal	KT
	Sigma Sigmaguard BT 5411-7000	White	8010-01-470-7124	5.0 gal	KT
Grey Water, Sewage, and CHT Tanks 100% Solids, Edge-Retentive (applied at temperatures > 50°F) (Type VII/Class 13/Grade C)					
	International Interline 624	-	-	-	-
	Sherwin Williams Primer:				
	Nova-Plate UHS B62H220/B62V220	Buff	-	-	-
	Sherwin Williams Stripecoat/Topcoat:				
	Nova-Plate UHS B62A220/B62V220	Gray	-	-	-
	Nova-Plate UHS B62W220/ B62V220	White	-	-	-
	Nova-Plate UHS B62W220/ B62G220	Green	-	-	-
	Sigma Primer/Stripecoat/Topcoat:				
	Edgeguard 5427	Cream	-	-	-
	Edgeguard 5428	White	-	-	-
	Edgeguard 5428-5000	Gray	-	-	-

Downloaded from http://www.everyspec.com

MIL-SPEC	Coating	FED-STD-595 Color	National Stock No.	Quantity	U/I
DOD-PRF-24176 CEMENT, EPOXY, METAL REPAIR & HULL SMOOTHING					
	Ameron Amercoat 140 Epoxy Repair Compound	Gray	-	-	-
	A. W. Chesterton ARC 10	Gray	-	-	-
	A. W. Chesterton ARC 858	Gray	-	-	-
	Belzona 1311 Ceramic R-Metal	Gray	-	-	-
	Belzona 1111 Super Metal	Gray	-	-	-
	Belzona 1211 E-Metal	Gray	-	-	-
	Chem Seal CS 2725 Epoxy Bonding Compound	Gray	-	-	-
	Enecon Epoxit 6003/403	Gray	-	-	-
	Enecon Metalclad Duralloy	Gray	-	-	-
	Enecon Metalclad CeramAlloy CP	Gray	-	-	-
	International Intergard 822 Epoxy Filler	Red	-	-	-
	ITW Devcon Aluminum Putty F	Aluminum	-	-	-
	ITW Devcon Ceramic Repair Putty	Dark Blue	-	-	-
	ITW Devcon Plastic Steel Putty (A)	Gray	-	-	-
	ITW Devcon Titanium Putty	Gray	-	-	-
	ITW Philadelphia Resins Repair Compound	Blue	-	-	-
	Thortex Cerami-Tech EG	Gray	-	-	-
	Thortex Metal-Tech EG	Gray	-	-	-
MIL-PRF-24596 NONFLAMING FIRE-PROTECTIVE COATING COMPOUNDS					
	Rosewood	22519	8010-01-208-5832	1.0 gal	GL
	Beach Sand	22563	8010-01-206-4712	1.0 gal	GL
	Beach Sand	22563	8010-01-208-7772	5.0 gal	CN
	Sun Glow	23697	8010-01-208-7774	5.0 gal	CN
	Clipper Blue	24516	8010-01-208-1775	1.0 gal	GL
	Clipper Blue	24516	8010-01-208-7773	5.0 gal	CN
	Pastel Green	24585	8010-01-208-1779	1.0 gal	GL
	Pastel Green	24585	8010-01-208-1780	5.0 gal	CN
	Pastel Blue	25526	8010-01-208-7776	1.0 gal	GL
	Pastel Blue	25526	8010-01-209-1155	5.0 gal	CN
	Bulkhead Gray	26307	8010-01-208-1781	1.0 gal	GL
	Bulkhead Gray	26307	8010-01-208-7778	5.0 gal	CN
	Yellow Gray	26400	8010-01-208-1777	1.0 gal	GL
	Pearl Gray	26493	8010-01-208-1782	1.0 gal	GL
	Pearl Gray	26493	8010-01-209-3195	5.0 gal	CN
	Green Gray	26496	8010-01-209-1154	1.0 gal	GL
	Green Gray	26496	8010-01-208-1776	5.0 gal	CN
	Soft White	27880	8010-01-208-1778	1.0 gal	GL
	Soft White	27880	8010-01-208-7777	5.0 gal	CN
	Water-based:				
	Ameron Amercoat 601	Various	-	-	-
	Davlin Product 270	Various	-	-	-
	International Intercryl 451	Various	-	-	-
	NCP Mil-PRF-24596 Waterbase	Various	-	-	-
	Sherwin-Williams Mil-PRF-24596A N41-300 Series	Various	-	-	-
	Solvent-based:				
	International Interlac 537	Various	-	-	-

Downloaded from http://www.everyspec.com

MIL-SPEC	Coating	FED-STD-595 Color	National Stock No.	Quantity	U/I
	NCP Mil-PRF-24596 Solvent Based	Various	-	-	-
DOD-E-24607 NONFLAMING INTERIOR CHLORINATED ALKYD ENAMEL					
	Rosewood	22519	8010-01-344-5086	1.0 gal	GL
	Rosewood	22519	8010-01-344-5097	5.0 gal	CN
	Beach Sand	22563	8010-01-344-5085	1.0 gal	GL
	Beach Sand	22563	8010-01-344-5096	5.0 gal	CN
	Sun Glow	23697	8010-01-344-5088	1.0 gal	GL
	Sun Glow	23697	8010-01-344-5099	5.0 gal	CN
	Clipper Blue	24516	8010-01-344-5087	1.0 gal	GL
	Clipper Blue	24516	8010-01-344-5098	5.0 gal	CN
	Pastel Green	24585	8010-01-344-5090	1.0 gal	GL
	Pastel Green	24585	8010-01-344-5101	5.0 gal	CN
	Pastel Blue	25526	8010-01-344-5095	1.0 gal	GL
	Pastel Blue	25526	8010-01-344-5106	5.0 gal	CN
	Bulkhead Gray	26307	8010-01-344-5091	1.0 gal	GL
	Bulkhead Gray	26307	8010-01-344-5102	5.0 gal	CN
	Yellow Gray	26400	8010-01-344-5093	1.0 gal	GL
	Yellow Gray	26400	8010-01-344-5104	5.0 gal	CN
	Pearl Gray	26493	8010-01-344-5094	1.0 gal	GL
	Pearl Gray	26493	8010-01-344-5105	5.0 gal	CN
	Green Gray	26496	8010-01-344-5092	1.0 gal	GL
	Green Gray	26496	8010-01-344-5103	5.0 gal	CN
	Soft White	27880	8010-01-344-5089	1.0 gal	GL
	Soft White	27880	8010-01-344-5100	5.0 gal	CN
	There is no QPL for DOD-E-24607. Use the following or equivalent:				
	Ameron Amercoat 3234	Various	-	-	-
	Crawford TPD-24607	Various	-	-	-
	International Interlac 537	Various	-	-	-
	NCP DOD-E-24607	Various	-	-	-
	Sherwin-Williams TPD-24607B N41 Series	Various	-	-	-
MIL-PRF-24635 SILICONE ALKYD ENAMEL [Use following NSNs or procure directly from manufacturer listed on most current QPL-24635-(series). Colors without NSNs are available through GSA on demand]					
	Brown, Gloss	10080	(available through GSA on demand)		
	Tan, Gloss	10324	8010-01-433-8367	1.0 qt	QT
	Tan, Gloss	10324	8010-01-433-8365	1.0 gal	GL
	Spar, Gloss	10371	8010-01-396-6804	1.0 qt	QT
	Spar, Gloss	10371	8010-01-360-9307	1.0 gal	GL
	Red, Gloss	11105	8010-01-396-6803	1.0 qt	QT
	Red, Gloss	11105	8010-01-396-6798	1.0 gal	GL
	Red, Gloss	11105	8010-01-349-9006	5.0 gal	CN
	International Orange, Gloss	12197	8010-01-360-9306	1.0 gal	GL
	CG Red, Gloss	12199	8010-01-360-9305	1.0 gal	GL
	Orange, Gloss	12246	8010-01-433-8361	1.0 qt	QT
	Orange, Gloss	12246	8010-01-433-8381	1.0 gal	GL
	Yellow, Gloss	13538	8010-01-396-6805	1.0 gal	GL
	Yellow, Gloss	13538	8010-01-349-9005	5.0 gal	CN
	Yellow, Lusterless	33538	(available through GSA on demand)		
	Chartreuse, Semigloss	23814	(available through GSA on demand)		

Downloaded from http://www.everyspec.com

MIL-SPEC	Coating	FED-STD-595 Color	National Stock No.	Quantity	U/I
	Dark Green, Gloss	14062	8010-01-349-9007	5.0 gal	CN
	Bright Green, Gloss	14260	(available through GSA on demand)		
	Light Green, Gloss	14449	8010-01-433-8370	1.0 qt	QT
	Light Green, Gloss	14449	8010-01-433-8369	1.0 gal	GL
	Dark Blue, Gloss	15044	8010-01-433-8371	1.0 qt	QT
	Dark Blue, Gloss	15044	8010-01-433-8374	1.0 gal	GL
	Blue, Gloss	15123	8010-01-396-6797	1.0 qt	QT
	CG Blue, Gloss	15182	8010-01-396-6796	1.0 qt	QT
	CG Blue, Gloss	15182	8010-01-360-9304	1.0 gal	GL
	Light Blue, Gloss	15200	8010-01-433-8382	1.0 qt	QT
	Light Blue, Gloss	15200	8010-01-433-8373	1.0 gal	GL
	Dark Gray, Gloss	16081	8010-01-433-8384	1.0 qt	QT
	Dark Gray, Gloss	16081	8010-01-433-8379	1.0 gal	GL
	Blue Gray, Gloss	16099	8010-01-360-8068	1.0 gal	GL
	Blue Gray, Gloss	16099	8010-01-374-8954	5.0 gal	CN
	Gray, Gloss	16187	8010-01-356-2940	1.0 gal	GL
	Light Gray, Gloss	16376	8010-01-375-2175	1.0 gal	GL
	Black, Gloss	17038	8010-01-350-5239	1.0 gal	GL
	Black, Gloss	17038	8010-01-344-6695	5.0 gal	CN
	Black, Semigloss	27038	8010-01-344-5320	1.0 gal	GL
	Black, Lusterless	37038	8010-01-356-2938	1.0 gal	GL
	Black, Lusterless	37038	8010-01-344-6703	5.0 gal	CN
	Gold, Gloss	17043	(available through GSA on demand)		
	Dark Purple, Gloss	17100	(available through GSA on demand)		
	Purple, Gloss	17142	8010-01-433-8375	1.0 qt	QT
	Purple, Gloss	17142	8010-01-433-8388	1.0 gal	GL
	White, Semigloss	27886	8010-01-382-1810	1.0 gal	GL
	CG White, Gloss	17925	8010-01-397-3935	1.0 gal	GL
	Ameron Amercoat 3203	Various	-	-	-
	Ameron Amercoat 5410	Various	-	-	-
	Crawford Mil-E-24635	Various	-	-	-
	International Interlac 800	Various	-	-	-
	BLP Mobile Jack Tar Silicone Alkyd Enamel	Various	-	-	-
	NCP Mil-E-24635	Various	-	-	-
	Sherwin-Williams Mil-PRF-24635B N40 Series	Various	-	-	-
MIL-PRF-24647 ANTICORROSIVE AND ANTIFOULING SHIP HULL PAINT SYSTEM					
Anticorrosives					
	Ameron Amercoat 230	Gray	8010-01-419-2430	5.0 gal	KT
	Ameron Amercoat 230	Red	8010-01-270-8161	5.0 gal	KT
	Ameron Amercoat 235	Gray	8010-01-359-5513	1.0 gal	KT
	Ameron Amercoat 235	Gray	8010-01-359-7235	5.0 gal	KT
	Ameron Amercoat 235	Red	8010-01-359-7236	1.0 gal	KT
	Ameron Amercoat 235	Red	8010-01-316-6741	5.0 gal	KT
	Hempel Hempadur 45150-11480	Gray	8010-01-419-2434	5.0 gal	KT
	Hempel Hempadur 45150-50630	Red	8010-01-419-2431	5.0 gal	KT
	Hempel Hempadur 4514U-11480 Low Temp	Gray	8010-01-419-2432	5.0 gal	KT
	Hempel Hempadur 4514U-50630 Low Temp	Red	8010-01-419-2427	5.0 gal	KT
	International Intergard FPJ034/FPA327 Summer Grade	Light Gray	8010-01-241-9721	5.0 gal	KT

Downloaded from http://www.everyspec.com

MIL-SPEC	Coating	FED-STD-595 Color	National Stock No.	Quantity	U/I
	International Intergard FPL274/FPA327 Summer Grade	Red	8010-01-268-7583	5.0 gal	KT
	International Intergard FPJ034/FCA321 Winter Grade	Light Gray	8010-01-241-9723	5.0 gal	KT
	International Intergard FPL274/FCA321 Winter Grade	Red	8010-01-268-7584	5.0 gal	KT
	International Intertuf KHA302/KHA062 Summer Grade	Gray	8010-01-421-2963	5.0 gal	KT
	International Intertuf KHA303/KHA062 Summer Grade	Red	8010-01-421-2964	5.0 gal	KT
	International Intertuf KHA302/KHA414 Winter Grade	Gray	8010-01-421-2967	5.0 gal	KT
	International Intertuf KHA303/KHA414 Winter Grade	Red	8010-01-421-2966	5.0 gal	KT
	Sherwin Williams P23AQ81/P23VQ80	Gray	8010-01-467-5556	5.0 gal	CN
	Sherwin Williams P23RQ82/P23VQ80	Red	8010-01-467-5555	5.0 gal	CN
	Sherwin Williams P23AQ61/P23VQ80 Low Temp	Gray	8010-01-467-5558	5.0 gal	CN
	Sherwin Williams P23RQ62/P23VQ80 Low Temp	Red	8010-01-467-5557	5.0 gal	CN
Antifoulants					
	Ameron ABC #3	Black	8010-01-210-7812	1.0 gal	GL
	Ameron ABC #3	Black	8010-01-210-7813	5.0 gal	CN
	Ameron ABC #3	Red	8010-01-211-4815	5.0 gal	CN
	Hempel Olympic 76600-19990	Black	8010-01-419-2428	5.0 gal	CN
	Hempel Olympic 76600-51110	Red	8010-01-419-2435	5.0 gal	CN
	International Interviron BRA640	Red	8010-01-339-8708	5.0 gal	CN
	International Interviron BRA642	Black	8010-01-339-8707	5.0 gal	CN
	Sherwin Williams P30BQ12	Black	8010-01-467-5561	5.0 gal	CN
	Sherwin Williams P30RQ10	Red	8010-01-467-5559	5.0 gal	CN
DOD-PRF-24648 PRIMER COATING, ZINC DUST PIGMENTED (INORGANIC ZINC)					
	Type I, Class 1, Composition B (water-based)	36231	8010-01-350-2068	1.0 gal	KT
	Type I, Class 1, Composition B (water-based)	36231	8010-01-349-8055	4.0 gal	KT
	Water-based:				
	Finnaren & Haley Inducote HRZ-18	Gray	-	-	-
	International Interzinc 685	Gray	-	-	-
	Jotun 13F18 WB-18	Gray	-	-	-
MIL-PRF-24667 NON-SKID COATING SYSTEM					
	Primers (For use with Type I, II, III, and IV systems)				
	Dark Gray	26008	8010-01-397-3986	1.0 gal	KT
	Dark Gray	26008	8010-01-397-3810	5.0 gal	KT
	Light Buff	22516	8010-01-397-3987	1.0 gal	KT
	Light Buff	22516	8010-01-397-3811	5.0 gal	KT
	AST MS-10C				
	AST MS-7C				
	AST MS-7CZ				
	Ameron Amercoat 137				

Downloaded from http://www.everyspec.com

MIL-SPEC	Coating	FED-STD-595 Color	National Stock No.	Quantity	U/I
	Type I, Comp G, High Durability, Rollable, General Use Abrasive Deck Coating AST MS-400G AST MS-440G AST MS-660G UV Resistant Epoxy/Low Solar Absorbing Ameron Amercoat 138HR	36076	8010-01-397-3802	5.0 gal	KT
	Type II, Comp G, Standard Durability, Roll or Trowel, General Use Abrasive Deck Coating AST MS-375G AST MS-440G AST MS-660G UV Resistant Epoxy/Low Solar Absorbing Ameron Amercoat 138HR	36076	8010-01-397-3806	5.0 gal	KT
	Type III, Comp G, Standard Durability, Rollable Resilient Abrasive Deck Coating AST MS-1600 Flexible Epoxy Intermediate Membrane (Use with AST MS-880G or AST MS-660G UV/LSA)	Dark Gray	-	-	-
	Type IV, Comp G, Standard Durability, Sprayable, General Use Abrasive Deck Coating AST MS-375G AST MS-2000 Ameron Amercoat 138HR	36076	8010-01-441-5852	5.0 gal	KT
	Color Toppings Dark Gray Red White Yellow AST MS-180 AST MS-200 Ameron Amercoat 929	 36076 31136 37875 33538	 8010-01-397-3816 8010-01-397-3815 8010-01-397-3812 8010-01-397-3814	 5.0 gal 5.0 gal 5.0 gal 5.0 gal	 KT KT KT KT
CID A-A-59313 ANTI-SEIZE THREAD COMPOUND, ZINC DUST-PETROLATUM					
		-	8030-00-292-1102	8.0 oz	TU
MIL-C-81309 CORROSION PREVENTIVE COMPOUND, WATER DISPLACING, ULTRA-THIN FILM					
	Type II - Soft Film, Class 1 - Nonpressurized Container	-	8030-00-213-3279	1.0 gal	GL
	Type II - Soft Film, Class 1 - Nonpressurized Container	-	8030-00-262-7358	5.0 gal	CN

F. Procurement Information.

1. Government Services Administration (GSA). The most convenient methods for ordering coatings and supplies through GSA are found in Chapter 4 Painting Organization and Supervision. Following are GSA resources to place orders or get questions answered:

   a. GSA Customer Service is available at 816-926-7315.

Downloaded from http://www.everyspec.com

b. Access to GSA Advantage! may be obtained at www.gsaadvantage.gov. For questions call the GSA Advantage helpline toll-free at 877-472-3777.

c. For up-to-date Multiple Award Schedule information visit the Schedules E-Library at www.fss.gsa.gov. For ordering assistance or for additional information, contact the GSA, Hardware and Appliances Center Customer Service at 816-926-7315.

d. Fax or mail a MIPR to the address below for a 48 hour turn around. For questions, call GSA.

General Services Administration
Federal Supply Service (6FEI)
1500 East Bannister Road
Kansas City, MO 64131
816-926-6757 / Fax: 816-926-7971

e. To submit a standard MISTRIP requisition, a Form DD 1348-6 may be faxed or mailed to the above address.

2. Vender Information. The following phone numbers are provided for the venders listed in CG Approved Coatings or elsewhere in this manual. The Federal Supply Service (FSS) Multiple Award Schedule contract number is provided where available.

American Safety Technologies
565 Eagle Rock Avenue
Roseland, NJ 07068
973-403-2600 / Fax: 973-403-1108

Ameron Performance Coatings
13010 Morris Road, Suite 400
Alpharetta, GA 30004
501-455-4500 / Fax: 501-455-4069
FSS: GS-10F-8896H expires 31 May 2008

A. W. Chesterton Company
225 Fallon Road
Stoneham, MA 02180
781-481-2234 / Fax: 781-438-2535

Belzona Inc.
2000 N. W. 88 Court
Miami, FL 33172
305-594-4994 / Fax: 305-599-1140

BLP Mobile Paint Manufacturing Co.
4775 Hamilton Boulevard
Theodore, Alabama 36582
251-443-6110 / Fax: 251-408-0410

Downloaded from http://www.everyspec.com

Chem Seal Products
11120 Sherman Way
Sun Valley, CA 91352
818-982-1650 / Fax: 818-765-5603

Crawford Laboratories Incorporated
4165 S. Emerald Ave.
Chicago, IL 60609-2646
773-376-7132 / Fax: 773-376-0945

Davlin Coatings, Inc.
700 Allston Way
P.O. Box 2308
Berkeley, CA 94702
510-848-2863 / Fax: 510-848-1464

Dumond Chemicals, Inc.
1501 Broadway
New York, NY 10036
212-869-6350 / Fax: 212-764-5762

Enecon Corp.
700 Hicksville Road
Enecon Center Suite 110
Bethpage, NY 11714
516-349-0022 / Fax: 516-349-5522

E Paint Company
25 Research Road
E. Falmouth, MA 02536
508-540-4412 / Fax: 508-495-3210

Esgard, Inc.
515 Debonnaire Road
Scott, LA 70583
337-234-6327

Euronavy Marine & Industrial Maintenance Coatings
(Euronavy ES301 products are distributed by Sherwin-Williams)

Finnaren & Haley, Inc.
901 Washington Street
Conshohocken, PA 19428
800-843-9800 / Fax: 610-825-1184

The Flood Company
1212 Barlow Road, P.O. Box 2535
Hudson, OH 44236-0035
330-650-4070 / Fax: 330-650-1453

Downloaded from http://www.everyspec.com

Hempel Coatings (USA), Inc.
600 Conroe Park North Drive
Conroe, TX 77303
936-523-6000 / Fax: 936-523-6073

International Paint Inc.
Customer Order Service Dept.
6001 Antoine Street
Houston, TX 77091
800-654-7692 / Fax: 713-684-1295

ITW Devcon
30 Endicott Street
Danvers, MA 01923
978-777-1100 / Fax: 978-774-0516

ITW Philadelphia Resins
130 Commerce Drive
Montgomeryville, PA 18936
215-855-8450 / Fax: 215-855-4688

Jotun Paints, Inc.
9203 Highway 23
P.O. Box 159
Belle Chasse, LA 70037
504-394-3538 / Fax: 504-394-3726

NCP Coatings, Inc.
225 Fort Street
Niles, MI 49120-0307
269-683-3377 / Fax: 269-683-3305

Sherwin-Williams Company, Marine Customer Service
101 Prospect Ave.
655 Guild Hall
Cleveland, OH 44115-1075
877-877-7115 / Fax: 800-792-2776
FSS: GS-10F-8004J expires 31 Jan 2008

Sigma Coatings USA
1500 Harbor Blvd.
Weehawken, NJ 07087
201-866-8400 / Fax: 201-866-7701

Sikkens Wood Finishes
Akzo Nobel Coatings Inc. Customer Service
1845 Maxwell Street
Troy, MI 48084
248-637-0400 / Fax: 248-637-5252

Downloaded from http://www.everyspec.com

Somay Products, Inc.
4301 N.W. 35th Avenue
Miami, Florida 33142-4382
305-633-6333 / Fax: 305 638-5524

Temp-Coat Brand Products, LLC
301 W. Airline Hwy, Ste. 100
LaPlace, LA 70068
985-651-2911 / Fax: 985-651-2964

Thortex America Inc.
12 Iron Bridge Drive
Collegeville, PA 19426
610-831-0222 / Fax: 610-831-1910

Total Rust & Corrosion Control Inc./Protective Coatings and Consultants, LLC
P. O. Box 1707
Ocean Springs, MS 39566-1707
228-217-4707 / Fax: 228-872-2611

Turco Products, Inc.
Subsidiary of Henkel Surface Technologies (800-521-1355)
2700 Temple Avenue, Suite B, Long Beach, CA 90806
562-981-8300 / Fax: 562-981-8303

Ultra Safety Systems
3755 Fiscal Court
Riviera Beach, FL 33404
561-845-1086 / Fax: 561-844-8566

USFilter Electrocatalytic Products
2 Milltown Ct.
Union NJ 07083
908-851-2277 / Fax: 908-851-6906

3M Safety Walk General Purpose Slip Resistant Surfacing (Pre-Cut or Rolls), Primer, and Edge Sealer are available from:

Louisiana Association for the Blind
1750 Claiborne Avenue
Shreveport, LA 71103-4189
318-635-6471 / Fax: 318-635-8902

3. Procurement of Miscellaneous Items.

   a. Military/Federal Specifications can be obtained at no charge online from the following DOD web site: http://astimage.daps.dla.mil/online/ Registration is required.

   b. FED-STD-595B color samples, fan deck, individual color chips, and sets of color chips are on sale by GSA at the following address:

Downloaded from http://www.everyspec.com

General Services Administration
Federal Supply Service Bureau
Specification Section
Suite 8100
470 East L'Enfant Plaza, SW
Washington, DC 20407
(202) 755-0325 or 0326

(1) Surface preparation specifications and visual standards are available from:

The Society for Protective Coatings
40 24th Street, 6th Floor
Pittsburgh, PA 15222-4656
412-281-2331 / Fax: 412-281-9992
www.sspc.org

NACE International
P.O. Box 201009
Houston, TX 77216-1009
281-228-6223 / Fax: 281-228-6329
http://www.nace.org

(2) Decals (numerals, letters, and Coast Guard emblems) are still available from UNICOR as listed in contract #DTCG23-96-D-ECV058 although the contract has expired:

UNICOR Federal Prison Industries
3150 Horton Road
Fort Worth, TX 76119
800-827-3168/817-413-3206/817-413-3207
www.unicor.gov

(3) Decals (numerals, letters, and Coast Guard emblems), controlled substance contraband seizure logos, and photoluminescent materials are available from:

Brace Enterprises
10250 SE 138 Terrace
Dunnellon, FL 34431
352-489-4442 / Fax: 35-489-4476
www.braceenterprise.com

(4) Photoluminescent materials are available from:

Tidewater Emblems, Ltd.
1816 Potters Road
P.O. Box 3234
Virginia Beach, VA 23454
757-428-1170 / Fax: 757-425-5697

Downloaded from http://www.everyspec.com

Noesis, Inc.
10440 Balls Ford Road
Suite 250
Manassas, VA. 22203
703-741-0300 / Fax: 703-741-0310

Downloaded from http://www.everyspec.com

APPENDIX D. NEW CONSTRUCTION REQUIREMENTS FOR COATINGS AND CORROSION CONTROL OF UNITED STATES COAST GUARD VESSELS

A. General. This chapter contains the new construction requirements for prevention of deterioration of United States Coast Guard (USCG) vessels due to corrosion and other related detrimental environmental effects. This document in conjunction with a Ship Specific Performance Specification and new construction guidelines will specify surface preparation, materials to use and the application of preventive measures such as paints, deck coverings and cathodic protection systems. All new construction specifications for USCG vessels must fully comply with the requirements of this Chapter and the coating systems of Appendices A-C.

1. New Construction Materials. All new construction materials (steel, aluminum, plastic and wood) received by the shipbuilder shall be stored in such as manner so as to prevent environmental degradation.

2. Maintaining Fit-for-use Condition of Steel and Aluminum. When received, new steel and aluminum shall be abrasive blasted to a 0.0005 to 0.001 inch (0.5 to 1.0 mil) surface profile and coated with a USCG approved preconstruction primer to a maximum dry film thickness of 0.001 inch (1.0 mil). The preconstruction primer shall maintain the metal in a fit-for-use condition for at least one year. Touch-up of deteriorated preconstruction primer is allowed.

3. Maintaining Fit-for-use Condition of Plastic and Wood. Plastic and wood shall be cleaned of all dirt, grease, oil, preservatives and mold release agents. Plastic and wood shall be stored and maintained in an enclosed climate controlled storage facility where relative humidity is maintained at 50% maximum.

B. Corrosion Prevention Plan.

1. Critical coated surfaces are those areas that have experienced premature failures in the past that have resulted in avoidable repair costs. Coatings specifications address these critical areas by requiring greater degrees of cleanliness, inspection, and quality control. Critical coated surfaces are defined as all exterior applications (including but not limited to the underwater body, freeboard, weather deck, flight deck, superstructure, and mast), bilges, and tanks/voids (including but not limited to ballast, potable water, and fuel).

2. The Shipbuilder or Design Agent is to prepare and submit to the contracting officer's technical representative, for review, a corrosion control plan for all critical coated areas subject to environmental degradation. A complete corrosion control plan shall be submitted for approval to the USCG six months prior to the construction of any portion of the ship where the application of corrosion control measures to a critical area will be required. The corrosion control plan shall also address material selection of fasteners, fixtures, and other hardware for proper corrosion control (e.g. 316 series stainless steel fasteners are the preferred type for exterior topside applications).

    a. The corrosion control plan shall take into account currently approved and/or qualified materials, environmental regulations, personnel safety requirements and vessel service life evolution such as docking and upkeep maintenance cycles.

Downloaded from http://www.everyspec.com

b. The corrosion control plan shall include all QA requirements presented throughout this Chapter.

C. Environmental Readings.

1. Measure and record ambient and metal surface temperatures, relative humidity, and dew point at a minimum of four-hour intervals during the entire preservation process which shall be recorded from conditions on-site, in close proximity to the structure being coated.

2. Coatings applied to critical areas shall be applied only when the temperature of the prepared substrate is greater than 50 degrees Fahrenheit and a minimum of 5 degrees Fahrenheit above the dew point.

3. Maintain the relative humidity in a tank or void space at a maximum of 50 percent from the start of abrasive blasting to cure of the topcoat.

D. Surface Preparation.

1. Accomplish degreasing/cleaning to ensure removal of surface contaminants, such as sea salts, loose rust, mud, marine growth, grease, oil, and other petroleum products.

   a. Accomplish degreasing/cleaning a maximum of 4 hours prior to surface preparation to ensure removal of surface contaminants.

   b. If evidence of contamination exists, accomplish degreasing/cleaning a maximum of 4 hours prior to application of each coat of paint to ensure removal of surface contaminants.

2. Prior to application of coatings to all critical surfaces, preconstruction primer shall be removed by dry abrasive blasting methods. The abrasive materials used shall be new and shall be qualified to military specification MIL-A-22262 or an abrasive material approved by the USCG and of sufficient hardness to establish a 0.002 to 0.003 inch (2.0 to 3.0 mils) peak-to-valley anchor tooth profile on the metal. Minimum surface cleanliness condition shall be in accordance with the SSPC-SP 10, near white metal (or equivalent for aluminum).

   a. Following blasting operations, measure and record surface peak-to-valley profile for all critical areas. Five profile readings shall be taken for the first 1,000 square feet (with a minimum of 5 profile readings taken); for each additional 1,000 square feet, 2 profile readings shall be taken. Each group of profile readings shall average 2 to 4 mils, with no reading less than one mil nor more than 5 mils. If such profile is not present, proper profile must be established. Profile readings shall be taken in accordance with Method C of ASTM D4417, Standard Test Methods for Field Measurement of Surface Profile of Blast Cleaned Steel, with the exception of averaging. If surface profile requirements of the manufacturer's instructions are greater than that specified herein, they shall supersede this requirement.

Downloaded from http://www.everyspec.com

b. Following the abrasive blast operation, the blasted surface shall be evaluated for contamination by soluble salts such as chlorides. The evaluation test may either be the cotton ball swab method of collection followed by titratation or the Bresle blister patch method of collection. Five determinations shall be conducted every 1,000 square feet. Areas less than 1,000 square feet shall have five determinations made. The maximum allowable soluble salt presence is 3 micrograms per square centimeter or if conductivity of the soluble salt is determined, the maximum allowable conductivity is 30 microsiemens –centimeter for immersion surfaces. The maximum allowable soluble salt presence is 7 micrograms per square centimeter or if conductivity of the soluble salt is determined, the maximum allowable conductivity is 70 microsiemens –centimeter for non-immersion surfaces. If conductivity measurements exceed the respective values, water wash the affected areas with fresh water. Dry the affected areas and remove all standing water. Accomplish surface conductivity checks on affected areas. Repeat step until satisfactory levels are obtained. Evaluation reports are to be maintained by the Shipbuilder QC Department for review by the USCG and the appropriate government representative.

c. The first coat of anti-corrosive paint shall be applied before the blasted metal surface has deteriorated to less than a SSPC-SP 10 surface condition. Deteriorated surfaces shall be restored to a SSPC-SP 10 surface condition before application of any coating.

3. For paint application to metal in non-critical areas, the first coat of the paint system may be applied over a sound, clean and intact preconstruction primer. Compatibility between the preconstruction primer and the anti-corrosive paint shall be demonstrated to the designated government representative.

E. Hydrostatic Testing. A hydrostatic test is a test where a component, portion of a system, or entire system is pressurized with a liquid or gas and inspected for leakage and deformation. The hydrostatic test shall be performed after any required cleaning and flushing but prior to any required disinfection. Joints, including new welds and weld repairs, shall be left uninsulated, unpainted, and exposed for examination during the test, unless they have been previously satisfactorily tested to required pressure. Ideally all welding and testing of welds should occur before any coating is applied. This is not always the case. If a coating was applied and then subsequent welding or repair performed requires a hydrostatic test, the coating will be removed and the disturbed area repaired.

F. Coating Materials.

1. Underwater Hull and Boot-top Areas – Steel, Wood and GRP vessels.

a. Underwater hull and boot-top paint systems in accordance with Appendix A shall be applied to abrasive blasted (SSPC-SP 10) metal at the same dry film thickness and the same number of coats as qualified or approved and as listed for a specific service life. Whether qualified to a military specification or approved by the

Downloaded from http://www.everyspec.com

USCG, any anti-fouling paint used shall be registered by the US Environmental Protection Agency (EPA).

b. Clean, dry, oil and grease-free plastic and wood shall be lightly roughened by hand sanding with 120 grit abrasive paper. Care shall be taken to avoid creating uneven rough areas that will act as a "wick" for the first coat of paint. Anti-corrosive paint is not required although it may be applied to avoid masking wood or plastic from adjacent metal areas.

2. Underwater Hull and Boot-top Areas – Aluminum vessels. Underwater hull and boot-top paint systems (anti-corrosive paint and anti-fouling paint) shall be non-metallic paints approved by the USCG in accordance with Appendix A, shall be applied to abrasive blasted (SSPC-SP 10 equivalent) aluminum at the same dry film thickness and the same number of coats as approved and as listed for a specific service life. Anti-fouling paints that contain a biocide compatible with aluminum must be registered with the US EPA.

3. Freeboard and Topsides. Freeboard and topsides coating systems, anti-corrosive and cosmetic coatings, are applied to abrasive blasted (SSPC-SP 10 or equivalent for aluminum) metal and will be installed in accordance with Appendix A. The Polysiloxane System as defined in Appendix C shall be applied. Powder coatings conforming to MIL-PRF-24712 or qualified to MIL-PRF-23236 may be applied to specific topside components, subject to USCG approval. An exterior ship color scheme developed by the shipbuilder shall be approved by the USCG.

4. Tanks, Bilges, and Floodable Voids. Coatings applied to tanks, bilges and voids shall be "high solids" anti-corrosive coating systems installed in accordance with Appendix B. Corrosion monitoring systems will be developed and installed in high use ballast and fuel/compensating fuel tanks.

5. Interior Spaces. Coating systems are to be applied in accordance with Appendix B.

6. Small Inaccessible Voids and Spaces. Vapor phase inhibitor, NSN 6850-01-413-9361, shall be used as a corrosion control system in these areas. Preservative treatment shall not be required within welded, watertight, airtight, and small inaccessible voids whose boundaries are not exposed to the sea or to standing water.

G. Coating Application QA Requirements.

1. Film Thickness Measurements. Measure and record Dry Film Thickness (DFT) of each coat applied for the coating systems. DFT readings for each coat shall be taken in accordance with SSPC-PA 2. Wet Film Thickness (WFT) readings are required in lieu of DFT readings for any coat that must be in a tacky state when the next coat is applied.

a. Apply an additional coat of any single coat of a multiple coat system when that coat measures less than its specified DFT. Multiple coats shall be of contrasting color. DFT of each coat, including an additional coat if applied, shall not exceed the specified maximum thickness for each coat.

Downloaded from http://www.everyspec.com

2. Stripe Coating. For all areas requiring stripe coating, confirm that stripe coat has been applied to all edges, weld seams, welds of attachments and appendages, cutouts, corners, butts, foot/handholds (including inaccessible areas such as back side of piping, under side of I-beams), and other mounting hardware (non-flat surface). Stripe coat these areas after the prime coat has dried. Stripe coating applied shall be neat in appearance, minimizing extra thickness applied to edges as well as streaks and drops of paint. The stripe coat shall encompass all edges as well as at least a one-inch border outside each edge and weld.

    a. For non-edge retentive coatings, radiusing of edges is recommended to ensure maximum service life. If edges are not radiused, the service life could be substantially reduced.

    b. Deburring and grinding of weld spatter is recommended to ensure maximum service life. If weld spatter is not removed, the service life of the coating could be substantially reduced.

3. Holiday check. Perform a visual holiday check on each coat of the system. Any holiday found shall be marked and touched up.

H. Environmental and Personnel Safety.

1. Regulations. In general, the use of the coatings and coating systems specified in this chapter will ensure compliance with all State and Federal air quality regulations regarding control of volatile organic compounds (VOC) and hazardous air pollutants (HAPS) at this time. Additionally, the use of the abrasives and coatings and coating systems in this specification will ensure that the level of hazardous heavy metals will be below that required to be classified as a non-hazardous waste. The shipyard is required to comply with all Federal, State and Local regulations concerning air pollution and hazardous waste disposal.

2. Personnel Protective Equipment. The use of the materials cited in this specification will generally result in extremely low level of compounds considered hazardous to human health, it must be recognized that "zero tolerance" for any hazardous material is not possible in the shipyard industrial environment. Therefore, it is required that all painters and abrasive blasters shall comply with the use of personal protective equipment (PPE) as prescribed by the local industrial hygienist and Health Administrations.

I. Miscellaneous.

1. Miscellaneous Areas and Items. Miscellaneous areas and items not specified in this document shall be preserved on a case basis in accordance with the latest USCG directives.

2. Cathodic Protection.

    a. Underwater Hull. For vessels where Impressed Current Cathodic Protection is used, cathodic protection of the underwater hull area shall be accomplished by

Downloaded from http://www.everyspec.com

means of a USCG approved Impressed Current Cathodic Protection (ICCP) system that will provide a potential of –0.85 volts with respect to a silver-silver chloride (Ag/AgCl) reference cell. The ICCP system shall be designed using analytical tools such as Physical Scale and Computer Modeling and layout shall be pre-approved by the USCG prior to procurement and installation. The ICCP system design and layout shall provide a potential of –0.85 volts (Ag/AgCL) for up to 15% of the hull exposed due to paint damage, during import and underway conditions and shall be capable of full automatic operation during this range of conditions. For vessels where sacrificial anode cathodic protection is used, the number and placement of anodes shall be in accordance with Naval Ships Technical Manual Chapter 633. The use of aluminum anodes will require special consideration.

b. Tanks, Voids, and Bilges. Where cathodic protection of tanks, voids and wet bilges is implemented, it shall be accomplished by means of zinc anodes conforming to MIL-DTL-18001. The number and placement of anodes shall be in accordance with Naval Ships Technical Manual Chapter 633. The use of aluminum anodes will require special consideration. In general, aluminum anodes may be in oil tanks provided the potential energy of the anode does not exceed 200 ft-lbs where the risk of sparking from a fallen aluminum anode will not have adverse affects on the space protected.

3. Testing.

a. General. The shipyard is required to maintain records of paint manufacturer's test certificates as part of receipt inspections of delivered paints and coatings. It is the shipyard's responsibility to store paints and coatings in accordance with the manufacturer's recommendations.

b. Paint Inspection. In addition to the shipyard quality control paint inspections, the shipyard is required to arrange for an independent Paint and Coatings Inspector certified as a "Specialist" in accordance with NACE or other recognized standard.

(1) The independent Paint and Coatings Inspector is to monitor the coatings and corrosion control process, witness and certify all required Paint Processes and required tests. The Paint and Coatings Inspector is to maintain records of all monitoring and test certificates for review by the USCG and/or other government representatives.