Downloaded from http://www.everyspec.com

TO 00-25-260

TECHNICAL MANUAL

METHODS AND PROCEDURES MANUAL

ASSET MARKING AND TRACKING
ITEM UNIQUE IDENTIFICATION (IUID)
MARKING PROCEDURES

F09603-01-D-0208-0060

SCIENCE APPLICATIONS INTERNATIONAL CORPORATION

DISTRIBUTION STATEMENT A - Approved for public release; distribution is unlimited WR-ALC/PA Certificate No. PA05-07412. Other requests for this document shall be referred to 584 CBSS/GBHDE, Robins AFB, GA 31098. Questions concerning technical content shall be referred to 586 CBSS/GBMCC.

Published Under Authority of the Secretary of the Air Force

7 JANUARY 2008

Downloaded from http://www.everyspec.com

LIST OF EFFECTIVE PAGES

INSERT LATEST CHANGED PAGES. DESTROY SUPERSEDED PAGES.

NOTE: The portion of the text affected by the changes is indicated by a vertical line in the margins of the page. Changes to illustrations are indicated by miniature pointing hands. Changes to wiring diagrams are indicated by miniature pointing hands or by shaded areas. A vertical line running the length of a figure in the outer margin of the page indicates that the figure is being added.

Dates of issue for original and changed pages are:

Original.....0.....7 January 2008

TOTAL NUMBER OF PAGES IN THIS PUBLICATION IS 50, CONSISTING OF THE FOLLOWING:

Page No.	*Change No.	Page No.	*Change No.	Page No.	*Change No.
Title	0				
A.	0				
i - iii	0				
iv Blank	0				
v - vii	0				
viii Blank	0				
ix - x	0				
1-1 - 1-4	0				
2-1 - 2-17	0				
2-18 Blank	0				
3-1 - 3-2	0				
4-1	0				
4-2 Blank	0				
5-1 - 5-11	0				
5-12 Blank	0				

*Zero in this column indicates an original page.

Downloaded from http://www.everyspec.com

TABLE OF CONTENTS

Chapter		Page
	LIST OF ILLUSTRATIONS	iii
	LIST OF TABLES	iii
	FOREWORD	v
	SAFETY SUMMARY	ix
1	INTRODUCTION AND GENERAL INFORMATION	1-1
1.1	Introduction	1-1
1.1.1	Asset Marking and Tracking Item Unique Identification (IUID) Marking Procedures	1-1
1.2	Purpose	1-1
1.3	Scope	1-1
1.4	Responsibilities	1-1
1.5	Manual Objectives	1-1
1.6	Definitions/Unique Identification (UID) Basics and Item Unique Identification (IUID) Objectives	1-2
1.6.1	Asset Marking and Tracking (AMT)	1-2
1.6.2	An Item	1-2
1.6.3	Unique Item Identification (UID) and Item Unique Identification (IUID) Implementation	1-2
1.6.4	Unique Item Identifier (UII)	1-2
1.6.5	UID Mark Lifecycle	1-2
1.6.6	Data Matrix	1-3
1.6.6.1	Primary Characteristics	1-3
1.6.6.1.1	Cell	1-3
1.6.6.1.2	Quiet Zone	1-3
1.6.6.1.3	Clocking Pattern	1-3
1.6.6.1.4	Finder Pattern	1-3
1.6.6.1.5	Data Region	1-3
1.6.6.2	Favorable Properties	1-3
1.6.6.3	Validation	1-3
1.6.6.4	Verification	1-3
1.6.7	Virtual UII	1-3
1.7	The Stakeholders	1-4
1.7.1	Program Managers	1-4
1.7.2	Equipment Specialists	1-4
1.7.3	Engineers	1-4
1.7.4	Industrial Engineer Technicians (IET)	1-4
1.7.5	Equipment Operators	1-4
1.7.6	Marking Technicians	1-4
2	GENERAL MARKING METHOD DESCRIPTIONS	2-1
2.1	General Part Marking (DPM)	2-1
2.1.1	Direct Part Marking (LPM)	2-1
2.1.2	Label Part Marking	2-1
2.2	Automated Adhesive Dispensing	2-1
2.2.1	Standard Applications	2-1
2.2.2	Equipment and Tools	2-1
2.2.3	Limitations	2-2
2.3	Ink Jet	2-3
2.3.1	Standard Applications	2-3
2.3.2	Equipment and Tools	2-3
2.3.3	Limitations	2-3
2.4	Liquid Metal Jet (LMJ)	2-3
2.4.1	Standard Applications	2-4
2.4.2	Limitations	2-4
2.5	Laser Bonding	2-4
2.5.1	Standard Applications	2-4
2.5.2	Equipment and Tools	2-4
2.5.3	Limitations	2-4
2.6	Laser Induced Vapor Deposition (LIVD)	2-4
2.6.1	Standard Applications	2-4
2.6.2	Equipment and Tools	2-5
2.6.3	Limitations	2-5
2.7	Mold, Cast, and Forge	2-5
2.7.1	Standard Applications	2-6
2.7.2	Equipment and Tools	2-6
2.7.3	Limitations	2-6
2.8	Silk Screen	2-6
2.8.1	Standard Applications	2-6
2.8.2	Equipment and Tools	2-6
2.8.3	Limitations	2-7
2.9	Stencil	2-7
2.9.1	Standard Applications	2-7
2.9.2	Equipment and Tools	2-7
2.9.3	Limitations	2-7
2.10	Abrasive Blast	2-8

Downloaded from http://www.everyspec.com

TABLE OF CONTENTS - Continued

Chapter		Page
2.10.1	Standard Applications	2-8
2.10.2	Equipment and Tools	2-8
2.10.3	Limitations	2-8
2.11	Laser Marking	2-8
2.11.1	Light Amplification by Stimulated Emission of Radiation (Laser)	2-8
2.11.1.1	Standard Applications	2-9
2.11.1.2	Limitations	2-9
2.11.2	Laser Engineered Net Shaping (LENS)	2-10
2.11.2.1	Standard Applications	2-10
2.11.2.2	Limitations	2-10
2.12	Dot Peen	2-11
2.12.1	Standard Applications	2-11
2.12.2	Equipment and Tools	2-11
2.12.3	Limitations	2-11
2.13	Electro-Chemical Marking (ECM)	2-13
2.13.1	Standard Applications	2-13
2.13.2	Equipment and Tools	2-13
2.13.3	Limitations	2-13
2.14	Electro-Chemical Etching (ECE)	2-14
2.14.1	Standard Applications	2-14
2.14.2	Equipment and Tools	2-14
2.14.3	Limitations	2-14
2.15	Engraving/Milling	2-14
2.15.1	Standard Applications	2-14
2.15.2	Limitations	2-14
2.16	Fabric Embroidery/Weaving	2-14
2.16.1	Standard Applications	2-14
2.16.2	Limitations	2-14
2.17	Aluminum Identification Labels	2-14
2.18	Aluminum ID Plates	2-14
2.19	Stainless Steel ID Plates	2-15
2.20	Adhesive-Backed Aluminum ID Plates	2-15
2.20.1	Limitations	2-15
2.21	Polyacrylic Labels	2-15
2.21.1	Limitations	2-15
2.22	Thermal Transfer Labels	2-15
2.22.1	Limitations	2-15
3	PRE-MARKING ACTIVITIES	3-1
3.1	Item Specific Data	3-1
3.2	Opportunistic Marking	3-1
3.3	Surface Preparation	3-1
3.3.1	Scope	3-1
3.3.2	Usage	3-1
3.3.3	Materials	3-1
3.3.4	Preparation	3-2
4	INSPECTION ACTIVITIES	4-1
4.1	General	4-1
4.2	Dot Peen Inspection	4-1
4.3	Laser Mark Inspection	4-1
5	MARKING PROCESS DETERMINATION AND MARKING METHOD PROCEDURES	5-1
5.1	Support Equipment Inspection	5-1
5.2	Calibration of Verifier	5-1
5.3	Grading the Mark	5-2
5.3.1	Direct Marking	5-2
5.3.2	2-D Label Print	5-2
5.4	Dot Peen Marking	5-2
5.4.1	Data Matrix Creation	5-2
5.4.2	Initial Dot Peen Inspection	5-4
5.5	Laser Marking	5-4
5.5.1	Data Matrix Creation	5-4
5.6	2-D Data Matrix Verification Process	5-6
5.6.1	Reprocessing Items	5-7
5.6.2	Restoring Items	5-8
5.7	Label Application	5-10

Downloaded from http://www.everyspec.com

LIST OF ILLUSTRATIONS

Number	Title	Page
1-1	The UII Lifecycle	1-2
1-2	ECC 200 Data Matrix	1-4
2-1	Automated Adhesive Dispensing	2-2
2-2	Ink Jet Method	2-3
2-3	Laser Bonding Method	2-4
2-4	Laser Induced Vapor Deposition Method	2-5
2-5	Preferred Mold Profile	2-6
2-6	Data Matrix System Stencil Structure	2-7
2-7	Laser Etching	2-9
2-8	Schematic Illustration of the LENS Process	2-10
2-9	Dot Peen	2-11
2-10	Preferred Dot Peen Configuration	2-12
2-11	Dot Peen Breakdown	2-12
2-12	Electro-Chemical Machining	2-13

LIST OF TABLES

Number	Title	Page
1-1	Characteristics of a UII	1-3
2-1	Label Considerations	2-16

Downloaded from http://www.everyspec.com

Downloaded from http://www.everyspec.com

FOREWORD

1. PURPOSE OF MANUAL.

The purpose of this manual is to provide methods and procedures for Item Unique Identification (IUID) implementation.

2. CONTENTS OF MANUAL.

Chapter 1	Introduction and General Information
Chapter 2	General Marking Method Descriptions
Chapter 3	Pre-Marking Activities
Chapter 4	Inspection Activities
Chapter 5	Marking Processes Determination and Marking Method Procedures

3. RELATED PUBLICATIONS.

The following publications will provide the operator with sufficient supplementary data for marking items with appropriate UII.

Document Number	Title
A-A-208	Ink, Marking Stencil, Opaque (Porous and Non-Porous Surfaces)
A-A-56032	Ink, Marking, Epoxy Base
AFI 91-301	Air Force Occupational and Environmental Safety, Fire Protection, and Health (AFOSH) Program
AFOSH STD 91-501	Air Force Consolidated Occupational Safety Standard
AIM-BC1	Uniform Symbology Specification Code 39
AIM DPM-1-2006	Direct Part Mark Quality Guidance
AS9132A	Data Matrix Quality Requirements for Parts Marking
ASTM D 3330	Standard Test Method for Peel Adhesion of Pressure-Sensitive Tape
ASTM D 3951	Standard Practice for Commercial Packaging
ASTM D 5181	Standard Test Method for Abrasion Resistance of Printed Matter by the GA-CAT Compression Abrasion Tester
DoD-HDBK-263	Electrostatic Discharge Control Handbook for Protection of Electrical and Electronic Parts, Assemblies and Equipment (Excluding Electrically Initiated Explosive Devices)
DRMS-R 5000.6	Compliance with Environmental Laws and Regulations
FAR, Part 45	Federal Acquisition Requisition for Government Property
ISO/IEC 15434	Information Technology - Transfer Syntax for High Capacity ADC Media
ISO/IEC 16022	Information Technology - Automatic Identification and Data Capture Techniques - Data Matrix Bar Code Symbology Specification
MIL-DTL-15024	Plates, Tags and Bands for Identification of Equipment, General Specification for
MIL-DTL-31000	Technical Data Package, General Specification for
MIL-HDBK-1812	Type Designation, Assignment and Method for Obtaining
MIL-PRF-131	Barrier Material, Water Vaporproof, Greaseproof, Flexible, Heat-Sealable
MIL-PRF-61002	Pressure-sensitive Adhesive Labels for Bar Codes, Performance Specification
MIL-STD-129	Military Marking for Shipment and Storage
MIL-STD-130	DoD Standard Practice Identification Marking of U.S. Military Property
MIL-STD-1686	Electrostatic Discharge Control Program for Protection of Electrical and Electronic Parts, Assemblies and Equipment (Excluding Electrically United Explosive Devices)
MIL-STD-202	Electronic and Electrical Component Parts Test Method Standard

Downloaded from http://www.everyspec.com

Document Number	Title
NASA-HDBK-6003	Application of Data Matrix
NASA-STD-6002	Applying Data Matrix Identification Symbols on Aerospace Parts
TO 00-25-234	General Shop Practice Requirements for the Repair, Maintenance, and Test of Electrical Equipment
TO 1-1-691	Cleaning and Corrosion Prevention and Control, Aerospace and Non-Aerospace Equipment
252-211-7003	DFARS Item Identification and Valuation
	Department of Defense Acquisition Guidebook
	Department of Defense Guide to Uniquely Identifying Items
	Department of Defense Guidelines for the Virtual Unique Item Identifier (UII)
	Department of Defense Directive 4140.1 Material Management Policy
	Department of Defense Directive 5000.1 Defense Acquisition Systems
	Department of Defense Instruction 5000.64 Accountability and Management of DoD-Owned Equipment and Other Accountable Property
	Department of Defense Instruction 7000.14 Defense Financial Management Regulation

4. ACRONYMS, ABBREVIATIONS, AND SYMBOLS.

This manual contains standard and non-standard abbreviations. The standard abbreviations are in accordance with ASME Y14.38. Standard and non-standard abbreviations and acronyms in this manual are defined below:

AC	Alternating Current
ADC	Automatic Data Capture
AFOSH	Air Force Occupational Safety and Health
AI	Application Identifier
AIM	Association for Automatic Identification and Mobility
AIS	Automated Information System
AIT	Automatic Identification Technology
AL	Aluminum
AMT	Asset Marking & Tracking
ASCII	American Standard Code for Information Interchange
CAD	Computer Aided Design
CAGE	Commercial and Government Entity
CO_2	Carbon Dioxide
CSA	Canadian Standards Association
°C	Degrees Celsius
°F	Degrees Fahrenheit
DC	Direct Current
DFARS	Defense Acquisition Regulations System
DoD	Department of Defense
DPI	Dots per Inch
DPM	Direct Part Marking
DRMS	Defense Reutilization and Marketing Service
DUNS	Dunn & Bradstreets Data Universal Numbering System
ECE	Electro-Chemical Etching
ECM	Electro-Chemical Marking
EDM	Electrical Discharge Machining
EID	Enterprise Identifier
ESD	Electrostatic Discharge
ESDS	Electrostatic Discharge Sensitive

Downloaded from http://www.everyspec.com

FAR	Federal Acquisition Regulation
GFP	Government Furnished Property
GIAI	Global Individual Asset Identifier
GSA	General Services Administration
GTIN	Global Trade Identification Number
HRC	Rockwell Hardness C Scale
HRI	Human Readable Information
IAC	Issuing Agency Code
ID	Identification
IEC	International Electrotechnical Commission
IET	Industrial Engineer Technician
IMM	Intrusive Marking Method
IR	Infra-Red
ISO	Ineternation Organization for Standardization
IUID	Item Unique Identification
JEDMICS	Joint Engineering Data Management Information and Control System
LASER	Light Amplification by Stimulated Emission of Radiation
LCD	Liquid Crystal Display
LENS	Laser Engineered Net Shaping
LIVD	Laser Induced Vapor Deposition
LMJ	Liquid Metal Jet
LPM	Label Part Marking
MPTO	Methods and Procedures Technical Order
MRI	Machine Readable Information
Nd:YAG	Neodymium-doped Yttrium Aluminum Garnet
NIMM	Non-Intrusive Marking Method
OPM	Opportunistic Parts Marking
OSHA	Occupational Safety and Health Administration
PCB	Printed Circuit Board
PIPC	Property in the Possession of Contractors
PPE	Personal Protective Equipment
PP&E	Property, Plant, and Equipment
PVC	Polyvinyl Chloride
PVF	Polyvinyl Fluoride
PWB	Printed Wiring Board
RFID	Radio Frequency Identification
SAM	Serialized Asset Management
SCR	Sequence Control Register
SIM	Serialized Item Management
SNT	Serial Number Tracking
TO	Technical Order
UID	Unique Identification
UII	Unique Item Identifier
UL	Underwriters Laboratory, Inc.
UV	Ultraviolet
VII	Virtual Item Identification
WCD	Work Control Document
2-D	2-Dimensional
3-D	3-Dimensional

Downloaded from http://www.everyspec.com

Downloaded from http://www.everyspec.com

SAFETY SUMMARY

1. GENERAL SAFETY INSTRUCTIONS.

This manual describes physical and chemical processes which may cause injury or death to personnel, or damage to equipment if not properly followed. This safety summary includes general safety precautions and instructions that must be understood and applied during operation and maintenance to ensure personnel safety and protection of equipment. Prior to performing any task, the WARNINGs, CAUTIONs, and NOTEs included in that task shall be reviewed and understood.

2. WARNINGS, CAUTIONS AND NOTES.

WARNINGs and CAUTIONs are used in this manual to highlight operating or maintenance procedures, practices, conditions or statements which are considered essential to protection of personnel (WARNING) or equipment (CAUTION). WARNINGs and CAUTIONs immediately precede the step or procedure to which they apply. WARNINGs and CAUTIONs consist of four parts: heading (WARNING or CAUTION), a statement of the hazard, minimum precautions, and possible result if disregarded. NOTEs are used in this manual to highlight operating or maintenance procedures, practices, conditions or statements which are not essential to protection of personnel or equipment. NOTEs may precede or follow the step or procedure, depending upon the information to be highlighted. The headings used and their definitions are as follows:

WARNING

Highlights an essential operating or maintenance procedure, practice, condition, statement, etc., which if not strictly observed could result in injury to, or death of, personnel or long term health hazards.

CAUTION

Highlights an essential operating or maintenance procedure, practice, condition, statement, etc., which if not strictly observed could result in damage to, or destruction of, equipment or loss of mission effectiveness.

NOTE

Highlights an essential operating or maintenance procedure, condition, or statement.

3. SAFETY PRECAUTIONS.

The following are broad electronics maintenance safety precautions related, in general, to all of the maintenance and operation procedures covered by this Technical Order (TO). These safety precautions may not necessarily appear again in this TO, together with those procedures with which they apply. Maintenance personnel shall read, understand and apply these precautions during any applicable maintenance operation. In addition, operators should be thoroughly familiar with applicable safety regulations as stated in AFI 91-301.

4. KEEP AWAY FROM LIVE CIRCUITS.

Do not replace components or make adjustments inside the equipment with electrical power present or connected. Also, under some conditions, dangerous hazards may exist with power turned off and power source not connected. Hazardous electrical potentials may exist at such times because of electrical charges stored in capacitor circuits. To avoid injuries, always unhook electrical power and then discharge and ground any circuit before touching it. Follow all safety interlock requirements.

5. ELECTROSTATIC DISCHARGE SENSITIVE (ESDS) ITEMS.

(Refer to TO 00-25-234 for proper electrostatic discharge precautions and procedures). Electrostatic charges are generated by the relative motion, physical separation of materials, or flow of solids, liquids, or gases. Common sources of Electrostatic Discharge (ESD) include personnel, items made of common plastics, and processing equipment. ESD can damage parts by direct contact with a charged source or by charges induced from electrostatic fields. Examples of ESDS parts are micro-circuits, discrete semiconductors, thick and thin film resistors, hybrid devices and piezoelectric crystals. Electronic parts having sensitive characteristics (e.g., thin-layered internal composition) and delicate, miniaturized construction that are susceptible to damage or degradation, in various degrees, from environmental field forces (electrostatic, electromagnetic, magnetic, or radioactive). This susceptibility also extends to the standard electronic modules, printed circuit boards, printed wiring boards, and circuit card assemblies containing one or more of these sensitive electronic parts.

Downloaded from http://www.everyspec.com

6. USE OF EQUIPMENT AND MATERIALS.

Personnel shall read, understand, and apply all safety measures when using equipment and materials for Item Unique Identification (IUID) marking. Equipment placement and site surveys must comply with local/MAJCOM procedures. Operating environment for part marking equipment should be well lit and free from dust, moisture, excessive heat or cold, and broad temperature fluctuations.

7. HOUSEKEEPING.

Personnel shall refrain from placing food and/or drinks on or near all part marking equipment. Any dust, dirt, or foreign debris found accumulating on part marking equipment should be cleaned and/or removed prior to operating.

8. MAINTENANCE.

Shops with assigned part marking equipment shall comply with routine maintenance schedules as defined by the manufacturer.

9. RESUSCITATION.

Personnel working with or near dangerous voltages or hazardous materials must be qualified on approved methods of resuscitation. For information on first aid or resuscitation, contact your supervisor or the Base Office of Bioenvironmental Health.

Downloaded from http://www.everyspec.com

CHAPTER 1
INTRODUCTION AND GENERAL INFORMATION

1.1 INTRODUCTION.

1.1.1 Asset Marking and Tracking Item Unique Identification (IUID) Marking Procedures. This section will further define IUID and the assignment of Unique Item Identifier (UII) to legacy items. The UII mark is supplemental to all prior marks on an item and needs only to replicate UII-related information. The chosen UII construct method will determine what information will be concatenated and all qualified legacy items shall be marked in accordance with approved IUID marking procedures set forth by Department of Defense (DoD) Guide to Uniquely Identifying Items and other DoD directives, MIL-STD-130, Identification Marking of U.S. Military Property, this technical manual, Unique Identification (UID) candidate-related technical manuals, and marking equipment instructions.

Engineering analysis of operating environmental conditions such as air-stream, chaffing, fluid contamination, high pressure wash, repetitive impact, temperature, etc. must be taken into consideration when determining marking methods, materials and need of protective coating best suited for each UID candidate. The use of supplemental, non-intrusive, additive marking of self-adhesive, non-metallic polyacrylic or polyimide labels or other forms of thermal transfer materials is highly encouraged whenever possible to reduce the depth of engineering analysis, eliminate metallurgical testing, and the need to design and fabricate individual holding fixtures required for intrusive UII applications.

Items and their embedded components such as circuit card assemblies, power supplies, transducers, etc. will be marked with a supplemental UII label affixed on the substrate of the existing means of identification, or placed adjacent to the existing label, plate, tag or other marking method; not to cover any prior pertinent markings. If this is not possible, a suitable, obvious location on the item must be determined not to detract from its form, fit, or function for supplemental UII placement.

Joint Engineering Data Management Information and Control System (JEDMICS) drawings, when available for legacy items, will reflect the recommended UII placement area. Applicable technical orders may otherwise be consulted.

1.2 PURPOSE.

The purpose of this Technical Order (TO) is to provide uniform guidance and is the authorizing document for implementation of the Item Unique Identification (IUID) procedures where authorized procedures are unavailable. Additionally, this TO provides information on the nature of, and methods of UII determination and marking methods.

1.3 SCOPE.

a. All UII marking shall be in accordance with data contained in this manual unless otherwise specified. When specific engineering drawings or overhaul instructions conflict with this manual, the specific document shall apply. If IUID-compliant instructions are covered in a component's Technical Data Package (TDP) and/or Work Control Document (WCD), the procedures in the TDP and/or WCD prevail.

b. This is a general series TO and is intended to be used in conjunction with specific maintenance/repair/overhaul manuals or engineering documents for aircraft, aircraft components, and support equipment.

c. This technical manual is published for use by personnel, at both Depot Level and other UII Marking operations in the manufacturing and maintenance of material.

1.4 RESPONSIBILITIES.

Commanders, managers, and supervisors shall ensure that all personnel under their supervision are knowledgeable of requirements in applicable directives and TOs, are proficiently trained and certified as required in accomplishing operations, and that they exercise safe practices during operations.

1.5 MANUAL OBJECTIVES.

This manual was prepared for the following reasons:

a. To gather, under one cover, the recommended practices and techniques to be used for the implementation of IUID as set forth by the DoD, DoD Instruction 5000.64, Defense Property Accountability.

b. To standardize these techniques and methods so that UII marking will be done in a uniform manner.

c. To indoctrinate all personnel on the importance of UII marking for better asset accountability, valua-

Downloaded from http://www.everyspec.com

tion and life cycle management logistics series for the warfighter by:

- Improving the acquisition of equipment and performance
- Capturing timely, accurate and reliable data on items (i.e., equipment, reparables, materials, consumables, warranty tracking)
- Improving life cycle asset management
- Tracking items in the DoD and industry systems for operational, logistic and financial accountability purposes

d. This manual provides updated data and procedures on the most commonly encountered general and special purpose UII marking methods and procedures.

1.6 DEFINITIONS/UNIQUE IDENTIFICATION (UID) BASICS AND ITEM UNIQUE IDENTIFICATION (IUID) OBJECTIVES.

The following definitions apply in regards to the text of this technical order.

1.6.1 Asset Marking and Tracking (AMT). AMT is defined as cradle-to-grave tracking throughout the Air Force logistics system of reparables, selected consumables, engines, equipment, and other designated properties to provide asset visibility and status. AMT is enabled by the use of Automatic Identification Technology (AIT).

1.6.2 An Item. An item is a single hardware article or a unit formed by a grouping of subassemblies, components, or constituent parts. In this definition, hardware is a generic term dealing with physical items as distinguished from a capability or function, such as equipment, tools, implements, instruments, devices, sets, fittings, trimmings, assemblies, subassemblies, components, and parts.

1.6.3 Unique Item Identification (UID) and Item Unique Identification (IUID) Implementation. UID and IUID are often used interchangeably. The policy for unique identification of items implements a DoD initiative for improving asset management through uniquely identifying tangible items. The UID marking is performed with a globally unique and ambiguous identifier. This enables traceability of the item throughout its life within the DoD inventory system, facilitates item tracking in DoD business systems, and provides reliable and accurate data for program management and accountability purposes.

1.6.4 Unique Item Identifier (UII). A UII is the unique and unambiguous identification data which is encoded within a ECC 200 data matrix symbol placed on an item. The UII is assigned only once to an item and the data within remains unique to that item for the entire lifecycle of the item. See Table 1-1 for the Characteristics of a UII and Figure 1-1 for an illustration of the UII lifecycle.

1.6.5 UID Mark Lifecycle. If it is not realistic for the UID mark to survive the entire lifecycle of the part or the rebuild process, the item will be marked in such a way that the UID mark will survive its expected lifecycle up to the point of rebuild. The item can then be remarked using the original UII data.

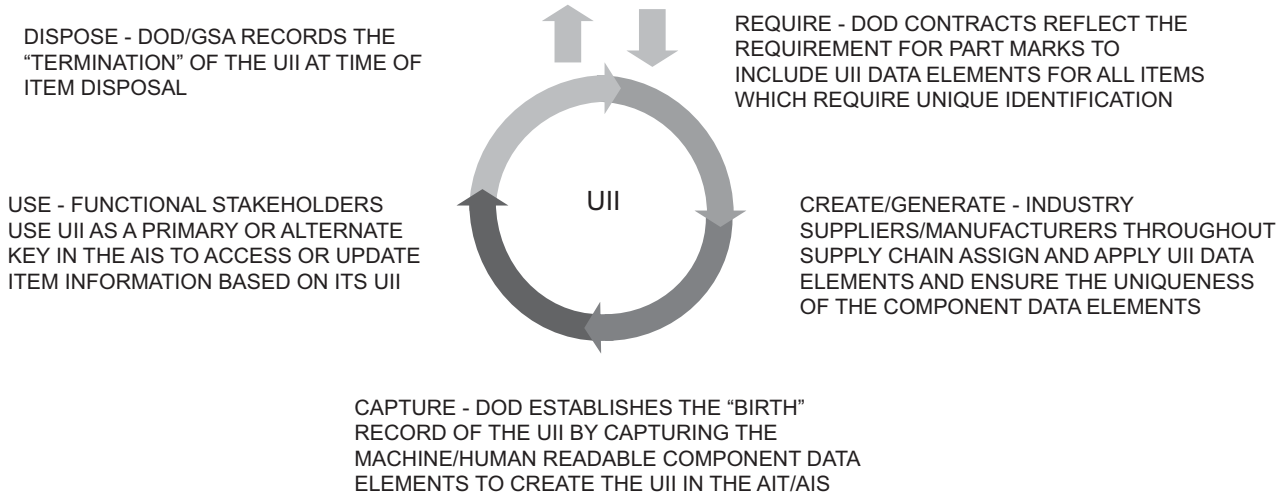

Figure 1-1. The UII Lifecycle

Downloaded from http://www.everyspec.com

Table 1-1. Characteristics of a UII

A UII is:	A UII is Not:
A globally unique unambiguous item identifier	A physical method of communicating data, such as radio frequency identification (RFID) tags, contact memory buttons, linear bar codes, or 2-D data matrices
Permanent through life	A replacement for the national stock number
Created by concatenating a string of specific data elements	Intelligent stand-alone data that contains information about an item
A means of capturing and utilizing life cycle data	Independent
Stored within a 2-D matrix - acts as an access key to other information	A storage for an item's total history

1.6.6 Data Matrix. (Figure 1-2) A data matrix is a 2-Dimensional (2-D), machine-readable symbol for encoding data. Many types of data matrix symbols exist and are used in various applications. The ECC 200 data matrix symbol described in ISO/IEC 16022 is the only symbol used in IUID part marking.

1.6.6.1 Primary Characteristics. The ECC 200 data matrix consists of uniform rows and columns of light and dark modules which are commonly square but may be rectangular in shape in cases where there is little room on the part or the part is unusually shaped. The symbol can range in size from 10x10 to 144x144 modules and can be scaled to be very small to extremely large. The definition of its primary characteristics are:

1.6.6.1.1 Cell. The small squares or dots that make up the structure of the data matrix. Cells represent bits or binary digits of encoded information that contain the matrices machine readable data. Dark cells are turned "on" while light cells are turned "off".

1.6.6.1.2 Quiet Zone. An area kept free from all markings or interfering obstructions. The quiet zone must be at lest one cell width wide around the entire data matrix. The quiet zone isolates the data matrix from all other adjacent markings.

1.6.6.1.3 Clocking Pattern. A broken "L" shaped pattern consisting of one row, and one column of alternating dark, or "on" cells, and light or "off" cells. The clocking pattern is used by verifiers and readers to determine the size of the data matrix.

1.6.6.1.4 Finder Pattern. A solid "L" shaped pattern consisting of one column and one row of all dark or "on" cells. The finder pattern is used by both verifiers and readers to locate, and measure the data matrix.

1.6.6.1.5 Data Region. The area framed by the clocking pattern and finder pattern that contains dark or "on" and light or "off" cells. These cells are used to encrypt the UII data.

1.6.6.2 Favorable Properties. The ECC 200 symbol is well suited for part marking for its many favorable properties. The symbol has a higher information density than barcodes and most two-dimensional symbols, with up to 2,335 alphanumeric characters. It can be scaled up or down to fit within available marking space and can be read with as little as 20% contrast and as much as 60% damage in any orientation. The symbol can be applied using an adhesive label, rigid plate, or directly on the surface using any one of multiple marking methods and technologies.

1.6.6.3 Validation. Action by the item marking source to determine correctness of marking content, adherence of marking to the requirements of this standard, and compliance with applicable image quality criteria.

1.6.6.4 Verification. Action by the item acquiring activity to determine correctness or marking content, adherence of marking to the requirements of this standard, compliance with applicable image quality criteria, and veracity of item marking source validation.

1.6.7 Virtual UII. Virtual UII is described in the latest version of the Department of Defense *Guidelines for the Virtual Unique Item Identifier (UII)*. A virtual UII enables the database entry of a UII and its associated data, while postponing the physical marking of the legacy items with a two-dimensional data matrix symbol to a more advantageous time based on logistic and economic considerations. In addition to legacy items already in the inventory and operational use, DoD resident equipment that is in the possession of contractors may also be assigned virtual UIIs until physical marking of the items is accomplished.

Downloaded from http://www.everyspec.com

1.7 THE STAKEHOLDERS.

The principal functional stakeholders in item management are Program Managers, Equipment Specialists, Engineers, Planners, Equipment Operators, and Marking Technicians.

1.7.1 Program Managers. Program Managers are responsible for the guidance and direction of the stakeholders involved in UII implementation. They are responsible for determining the items to be UII marked.

1.7.2 Equipment Specialists. Equipment Specialists assist in the determination of items to be marked, assist Engineers, and provide TO updates as required.

1.7.3 Engineers. Engineers verify the items to be marked and determine the marking method, placement of the mark, and the marking process for implementation of UII. Engineers also update engineering drawings to provide the placement of the UII.

1.7.4 Industrial Engineer Technicians (IET). IETs are responsible for updating documentation that directs Equipment Operators and Marking Technicians in the implementation of UII, to include item to be marked, marking method, and marking process.

1.7.5 Equipment Operators. Equipment Operators receive a WCD or routing documents and carry out the directions outlined in the documents. Equipment Operators generate the data matrix mark accordingly.

1.7.6 Marking Technicians. Marking Technicians apply the mark in accordance with directions outlined in the WCD or routing documents.

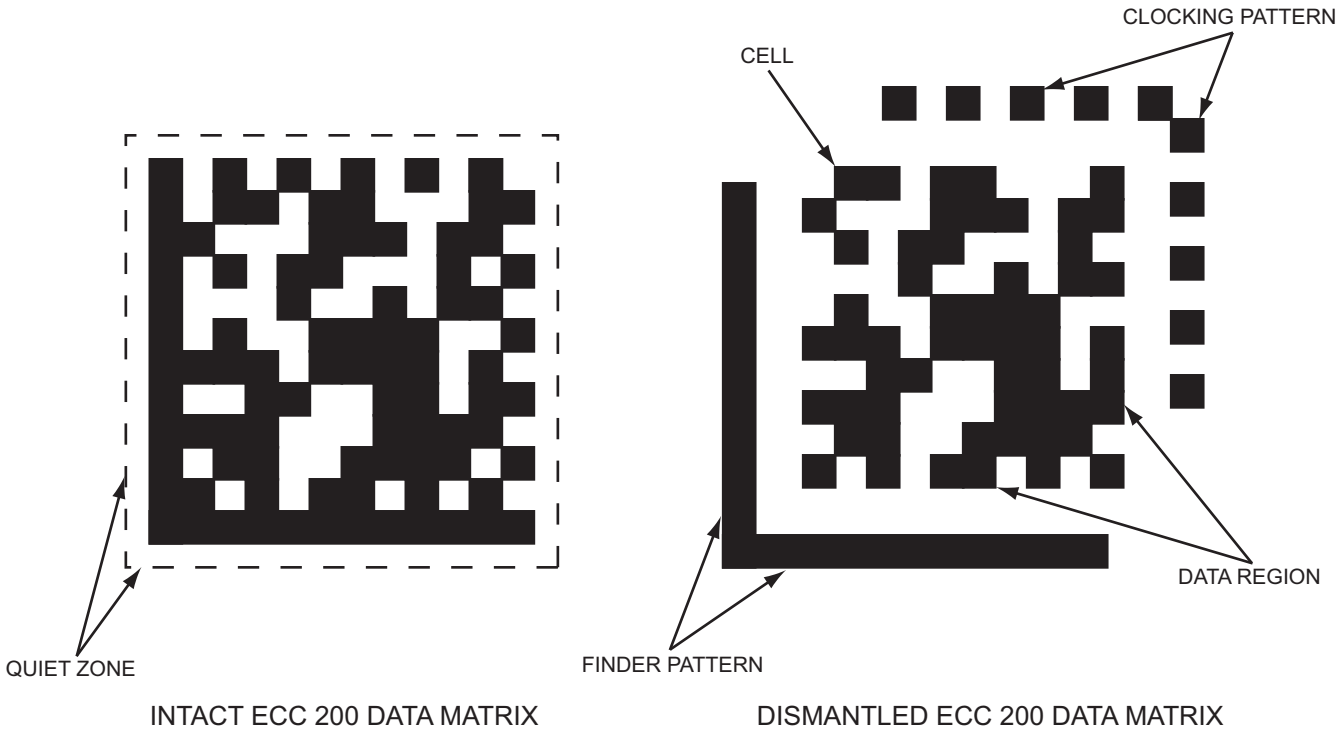

Figure 1-2. ECC 200 Data Matrix

Downloaded from http://www.everyspec.com

CHAPTER 2
GENERAL MARKING METHOD DESCRIPTIONS

2.1 GENERAL PART MARKING.

2.1.1 Direct Part Marking (DPM). DPM is generally suggested in applications where traceability is required after the product is separated from its temporary identification, the part is too small to be marked with bar code labels or tags, the part is subject to environmental conditions that do not allow the use of add-on identification means, or identification is required beyond the expected life of the part to disallow further use. DPM can be broken down into two primary categories: non-intrusive and intrusive.

- Non-Intrusive Marking Methods (NIMM). Non-intrusive markings, also known as additive markings, are produced as part of the manufacturing process or by adding a layer of media to the surface using methods that have no adverse effect on material properties. These methods include automated adhesive dispensing, ink jet, liquid metal jet, laser bonding, Laser Induced Vapor Deposition (LIVD), mold, cast and forge, silk screen, stencil, and some types of laser marking.

CAUTION

Dust clouds in the air can be ignited by electric parts, hot surfaces, and open flames. Epoxy can cause skin irritation as well as allergic respiratory reaction. Epoxy is harmful if swallowed and has been proven to be a cancer risk. Personal protective equipment should be worn to prevent harmful effects.

- Intrusive Marking Methods (IMM). An intrusive marking method is one that uses any device designed to alter a material surface to form a human or machine readable symbol. These methods include abrasive blast, dot peen, electro-chemical marking, electro-chemical etching, engraving/milling, fabric embroidery/weaving, and some types of laser marking.

2.1.2 Label Part Marking (LPM). Where practical, the mark may appear on a data plate or label, providing it can withstand normal wear and tear, including the range of solvents or other chemicals that may come in contact with the label. See Table 2-1, Label Considerations, for label selection.

2.2 AUTOMATED ADHESIVE DISPENSING (NIMM).

(Figure 2-1) Automated adhesive dispensing systems are designed to deposit precise amounts of adhesive on a repeatable basis. The preferred system employs an overhead gantry which allows for accurate positioning of the dispensing heads while the work piece remains stationary. Any fluid application is possible, including full contoured beads, dot dispensing, gasketing, pitting, and spraying of both one and two part materials. For maximum accuracy and repeatability, specified systems should allow for three-axis or equivalent movement drive by Teflon-coated hardened stainless steel lead screws and controlled by 5-phase stepper motors and precision servomotors. These drive systems assure a resolution of +/-0.001 in. (0.03 mm).

2.2.1 Standard Applications. Automated adhesive dispensing marking method is designed to deposit precise amounts of adhesive on a repeatable basis. This method can be used on any surface; however, the surface must be cleaned prior to marking. The system specified shall be supported by a programming platform that incorporates graphical and icon-driven concepts to provide an intuitive and user-friendly environment. Pull-down menus will allow operators to quickly input their specific dispensing parameters, while on-screen positioning displays will allow for real-time monitoring and control of the dispensing sequence. Software shall allow for circular path motion in XY, XZ, and YZ combinations, which provides continuous dispensing at different levels and shapes including vertical peaks and valleys (contouring). The system shall be designed to incorporate a full spectrum of dispensing heads, from syringes to fully integrated valves and controllers. Special consideration should be given to dispensing heads that are field repairable with a minimum of downtime. Such systems contain disposable material path inserts that allow the valve to be replaced on-line and with no cleaning.

2.2.2 Equipment and Tools. The equipment and tools used for automated adhesive dispensing consist of a computer equipped with graphical and icon-driven tools and the automated adhesive dispensing system.

Downloaded from http://www.everyspec.com

CAUTION

Isopropyl Alcohol or equivalent is flammable and toxic to skin, eyes, and respiratory tract. Skin and eye protection required. Good general ventilation is normally adequate. Avoid all sources of ignition. Use the appropriate personal protective equipment to prevent these conditions from occurring.

2.2.3 Limitations. The surface that is to be marked must be cleaned with Isopropyl alcohol or equivalent prior to marking.

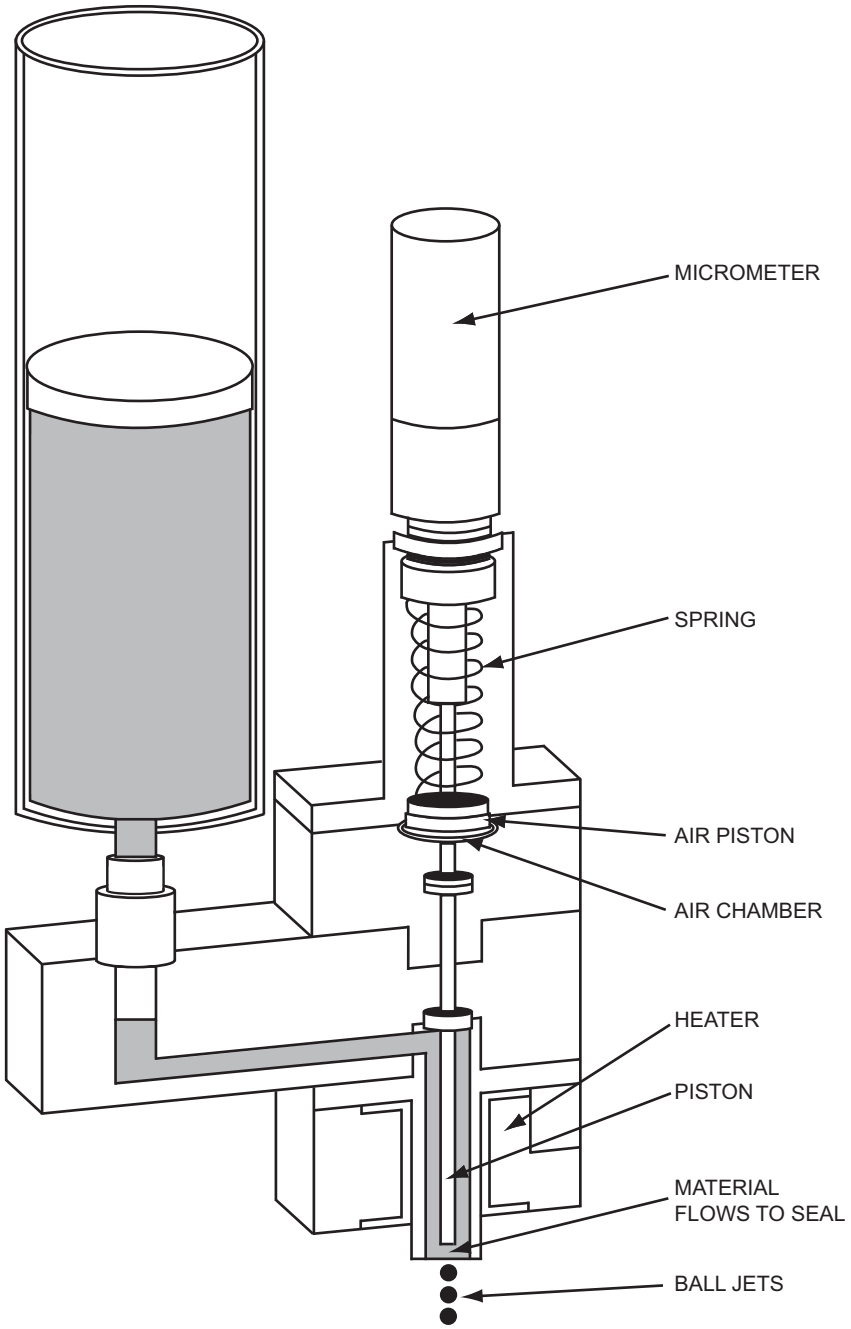

Figure 2-1. Automated Adhesive Dispensing

Downloaded from http://www.everyspec.com

2.3 INK JET (NIMM).

(Figure 2-2) Ink jet markers propel ink globules from the printing head to the part surface. These marks cover the area adequately regardless of whether or not the substrate is textured. The permanence of the mark is dependent on the chemical interaction between the ink, the surface of the part, and other materials to which the part may be exposed, i.e., cleaning solvents. Care must be taken to ensure the chemical properties of the ink being used are compatible with the material being marked, and with the processes through which the part being marked will be exposed. When applied to metal parts that are made out of aluminum, anodized, beryllium, carbon steel, corrosion resistant steel, magnesium, or titanium, ink jet markings should be coated with a clear lacquer in accordance with technical data before oiling. Operators should evaluate test marking to identify the correct adverse marking conditions such as:

- symbol distortion
- ink splatter
- smearing

These conditions can be corrected by adjusting the gap between the print head and the target, the shaft encoder input (speed sensor), system air pressure, and the ink formulation. The practical minimum size of the Data Matrix is limited to 3/8-in. square, with a density (number of rows and columns) of 16x16 cells, representing 16 alphanumeric characters. Ultraviolet (UV) ink can be used for security or aesthetic reasons.

CAUTION

The appropriate personal protective equipment is required as the ink jet process may cause skin irritation and burns.

2.3.1 Standard Applications. The ink jet marking method is used on fabrics, woods, plastics, and metal parts. Ink jet marking is used on metal parts that are made out of aluminum, anodized metal, beryllium, carbon steel, corrosion resistant steel, magnesium, or titanium, that have a protective phosphate finish and are covered with a clear lacquer. This marking must be applied before oiling of the item. This marking can also be used as a temporary marking of a work in progress.

2.3.2 Equipment and Tools. The equipment used for ink jet marking shall consist of an ink jet printer and ink.

2.3.3 Limitations. Ink jet should not be applied to parts subjected to immersion in liquids, prolonged exposure to liquid splash or spray, high temperatures, or abrasion, rubbing or sliding wear.

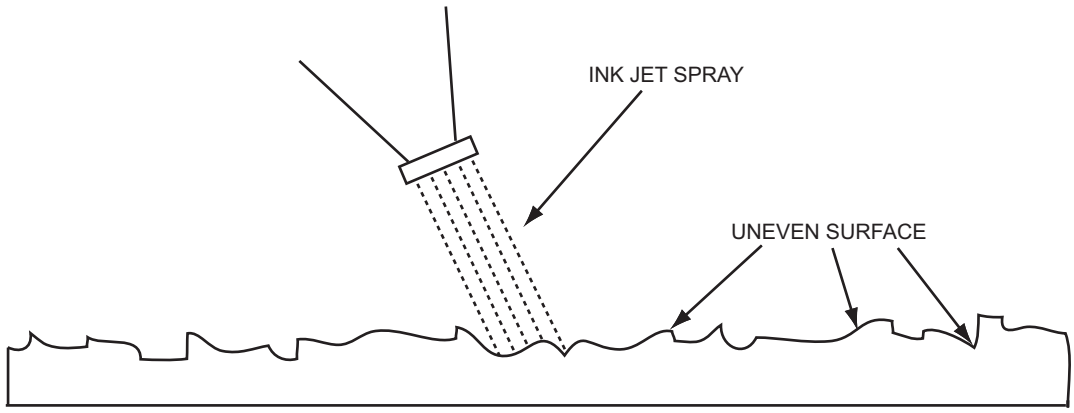

Figure 2-2. Ink Jet Method

2.4 LIQUID METAL JET (LMJ) (NIMM).

LMJ marking is similar in nature to ink jet printing but differs in that it dispenses extremely small droplets (0.0005 to 500 picoliter), (1 to 100 micro-inch diameter) of liquid metal in lieu of ink.

Downloaded from http://www.everyspec.com

CAUTION

The appropriate personal protective equipment is required as the liquid metal jet marking process may cause skin irritation and burns.

2.4.1 Standard Applications. The LMJ technology is being developed for the electronics industry to produce aluminum-based printed wiring boards (PWBs) and printed circuit boards (PCBs). It will also be suitable for use in permanent part marking.

2.4.2 Limitations. The LMJ marking device is still under development.

2.5 LASER BONDING (NIMM).

(Figure 2-3) Laser bonding is an additive process that involves the bonding of a material to the substrate surface using the heat generated by a Neodymium-doped Yttrium Aluminum Garnet (Nd:YAG) laser or equivalent. The materials used in this process are commercially available and generally consist of a glass grit powder or ground metal, oxides mixed with inorganic pigment, and a liquid carrier. The pigment can be painted or sprayed directly onto the surface to be marked, or transferred via pad printer, screen printer, or coating roller. Adhesive-backed tapes coated with an additive are also used in this process. The process also can be performed using a Carbon Dioxide (CO_2) laser or equivalent and ink foils for use in less harsh environments.

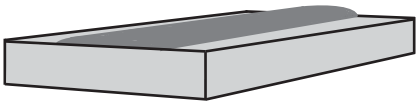

Figure 2-3. Laser Bonding Method

2.5.1 Standard Applications. Laser bonding method is used to mark items by bonding a medium to the surface of an item, marking with a laser and producing a raised mark. Laser bonding is used on items that have a phosphate dry film, anodize, or plating protective finish. The surface roughness in inches is 63 micro-inches or finer. This method is applied over the protective coating prior to oiling and then covered with a clear lacquer or equivalent. Laser bonding parameters shall be established using scrap material or a wax-based thermoplastic material also referred to as a test coupon. Coating materials must be stirred or agitated vigorously to ensure that the bonding materials are in suspension. Coating shall be applied in a manner that ensures even distribution of the coating across the marking surface. The settings established for laser bonding must be tested on bare metal to ensure that the heat levels applied produced no visible effect on the part surface. Laser bonding is accomplished using heat levels that have no noticeable affect on metal (aluminum, beryllium, carbon steel, corrosion resistant steel, magnesium, or titanium) or glass substrates, and are safe for use in safety critical applications. The markings produced using this technique (dependant upon the material used), are resistant to high heat, are unaffected by salt fog/spray, and are extremely durable.

2.5.2 Equipment and Tools. The equipment and tools used in laser bonding consist of a printer and laser bonding system.

2.5.3 Limitations. The limitations of laser bonding markings consist of coatings that are application-specific, are generally limited to flat or slightly curved surfaces, and are restricted to materials thicker than 0.001 in.

2.6 LASER INDUCED VAPOR DEPOSITION (LIVD) (NIMM).

(Figure 2-4) LIVD is used to apply part identification markings, heating and defrosting strips, antennas, circuitry, and sun shields to transparent materials. LIVD can be used on aluminum, anodized metal, beryllium, carbon steel, copper, corrosion resistant steel, magnesium, titanium, ceramics, plastics and rubber materials.

CAUTION

When the unit is in operation, the safety door must be closed and personnel must not tamper with the interlocks. The marking laser can burn skin instantly; KEEP CLEAR during operation. Due to fire hazard, do not place Polyvinyl Chloride (PVC) or equivalent plastic in the laser. Operators must verify each laser-marking machine has an Occupational Safety and Health Administration (OSHA) compliant fully charged fire extinguisher before they begin marking items. (See Safety Officer for guidance). Appropriate personal protective equipment shall be worn to prevent burns to the skin. Operators must be familiar with applicable equipment emergency shut down, manual lift, and lock-out-tag-out procedures by referring to the manufacturer manual.

2.6.1 Standard Applications. LIVD is accomplished by vaporizing material from a marking media trapped under a transparent part using heat generated from a vesicle spectrum laser. The gaseous vapors and droplets resulting from the heat build-up condense on the cooler transparent surface to form a hard uniform coating that is applied in a prescribed pattern. The process is accomplished under normal office conditions

Downloaded from http://www.everyspec.com

without the need for high heat or seal gas/vacuum chambers. The marking materials used to produce machine-readable symbols can be formulated to be read using both optical readers and sensing devices such as X-ray, thermal imaging, ultrasound, magneto-optic, radar, capacitance, or other similar sensing means.

2.6.2 Equipment and Tools. The equipment and tools used in LIVD consist of a CO_2 or equivalent laser, a computer, and a camera.

2.6.3 Limitations. LIVD is limited to transparent materials and the process is limited to lasers operating in the visible spectrum.

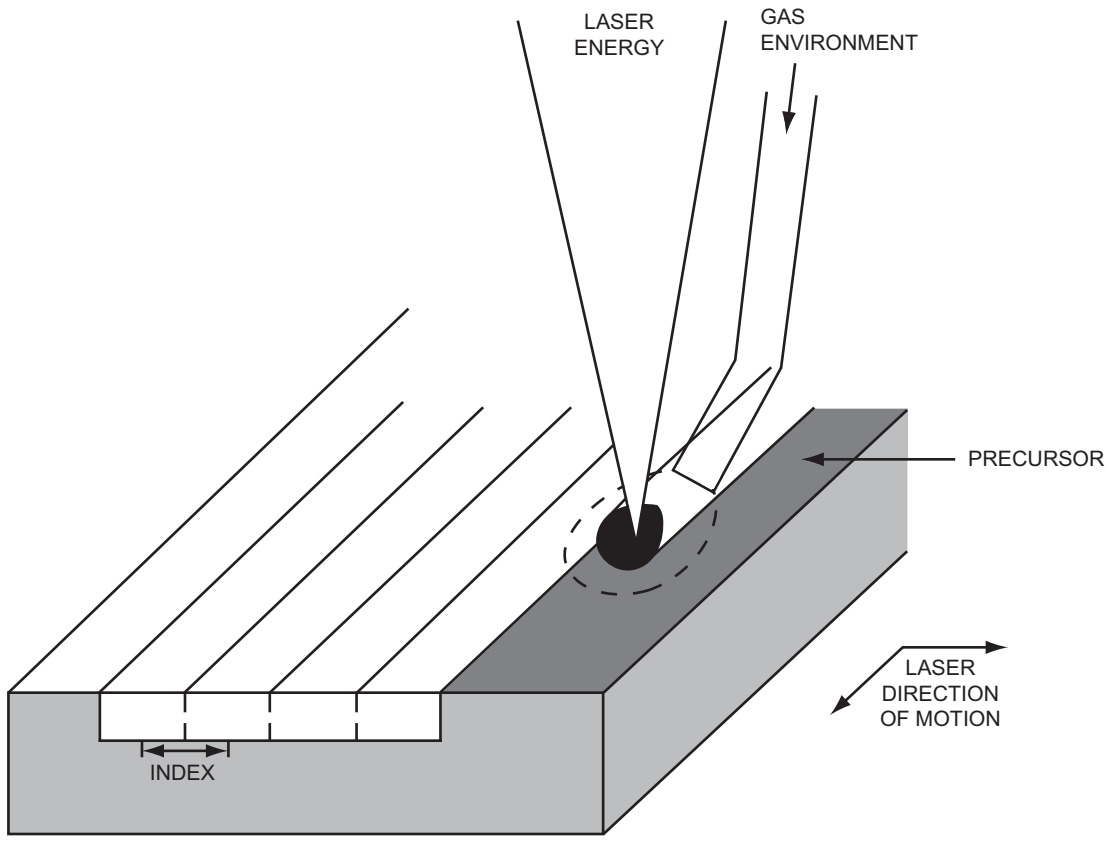

Figure 2-4. Laser Induced Vapor Deposition Method

2.7 MOLD, CAST, AND FORGE (NIMM).

(Figure 2-5) Cast metal marking of the 2-Dimensional (2-D) data matrix identification symbol can be achieved by printing a pattern of the 2-D data matrix symbol in physical or 3-Dimensional (3-D) form on a 3-D printer. These 3-D printing devices produce physical objects by using an ink jet print head that uses a wax based thermoplastic instead of ink, and prints layer upon layer to build up the "ink" thickness into a 3-D object. For the cast metal marking application, the 3-D printed pattern of the 2-D data matrix symbol is incorporated into a coupon made from wax-based thermoplastic material. Once printed, this coupon can be turned into a cast metal equivalent by putting the wax coupon pattern through the investment casting process. For direct marking of investment cast parts, these wax coupons are directly attached to the wax pattern of the part to be marked before being put through the investment casting process. For parts that are fabricated using sand casting, the wax coupons containing the 2-D data matrix symbology is placed into a recess in the mold pattern before the sand mold is compacted and formed. For parts produced by the molding or forged fabrication processes, the wax coupon containing the 2-D data matrix symbology is investment cast first to produce a cast metal coupon which is inserted into a recess in the mold before the end-use part is fabricated in the mold. The maximum size of a 3-D printed 2-D data matrix symbol is primarily limited by the maximum readable size of the scanning device (typically 2 to 3 in.) and to a lesser extent

Downloaded from http://www.everyspec.com

by the build platform size (typically 8x10 in.) of the 3-D printing device. The individual cells of the 2-D data matrix symbol are either raised above the surface or recessed into the coupon and when side- lighted, produce the contrast pattern necessary to be read by a 2-D data matrix scanner. Practically speaking, individual cell X, Y dimensions are typically held above 0.015 to 0.020 in. for good acuity and readability after the investment casting process. Any geometry may be used for the profile of an individual cell within the limits of the printing resolution of the 3-D printing device, typically 300 to 400 dots per inch (dpi). The most preferred cell profiles are cubical, semi-spherical, conical, or pyramidal in shape. The conical or pyramidal profile can also be trimmed to help eliminate sharp corners and corresponding stress risers. The depth or height of an individual cell recess or protrusion can be as little as 0.0015 in., and is primarily limited by scanning constraints. This 0.0015 in. dimension is a typical single layer thickness for the 3-D printing process. The maximum height or depth of a cell profile is only limited by the practical constraints of reproducing high aspect ratio features in the investment casting process, and by the coupon or part thickness itself. Typically aspect rations (depth/dimension) of less than one (1) are most preferred for the investment casting process.

2.7.1 Standard Applications. Molding, casting and forging are used on either plastic or rubber parts due to the fact that they may be either raised or depressed, unless otherwise specified. Casting or forging method causes the characters to raise or depress depending on the method of manufacture unless otherwise specified on the drawing. The marking should be used on non-machined surfaces only. These markings are applied to items that have no protective finish or a coating of light oil that is applied after marking the item.

2.7.2 Equipment and Tools. The equipment and tools that are used for mold, cast, and forge are a 3-D printer, a computer, a mouse, and a 2-D data matrix scanner.

2.7.3 Limitations. Mold, cast, and forge method is limited to raised cell profiles preferred for end-use parts subjected to high stresses. Raised cell profiles are preferred for accurate reproduction in the investment casting process because of the unlikelihood of trapping fluid bubbles. Raised cell profiles with trimmed vertices are most preferred for end-use parts subjected to high stresses. Raised markings should not be used if there is an interference with manufacturing operations or if other mating parts in the end-use application are anticipated. Markings should be used on non-machined surfaces only.

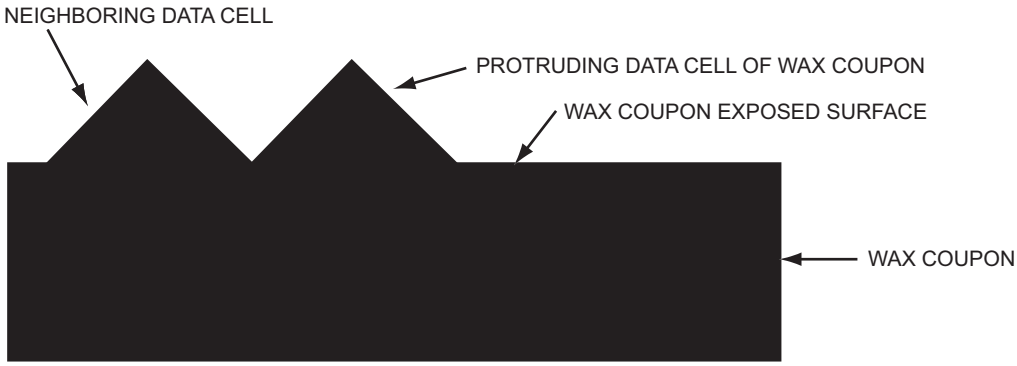

Figure 2-5. Preferred Mold Profile

2.8 SILK SCREEN (NIMM).

Silk screen markings are applied by pressing a marking media through openings in a mask. In the past, silk screen marking masks were made from woven silk or nylon fabrics coated with a photo-sensitive resist. The symbol is created by placing a photo-negative over the stencil and exposing it to an ultraviolet light source. The unexposed areas of the stencil are then dissolved using a chemical cutter, exposing openings in the mask that provide a representation of a symbol for marking. The silk screen stencil process was recently automated so that 2-D data matrix symbols can be printed in a manner very similar to that used to produce printed labels. The new method involves the use of a special laminated masking material that is passed through a desktop printing device which perforates a thermoplastic resin coating using a thermal print head to form an opening for silk screening and electro-chemical etching.

2.8.1 Standard Applications. Silk screen marking method is used by pressing marking media through openings in the screen. The marking symbol is created by placing a negative (photo) over the stencil and exposing it to ultraviolet light.

2.8.2 Equipment and Tools. The equipment and tools used for silk screen marking consist of a semi-automatic universal screen printer, silk screen software and a computer.

Downloaded from http://www.everyspec.com

2.8.3 Limitations. The limitations when using silk marking consist of the fact that silk screen should not be used on items exposed to spray or splash, high temperatures (over 300 °F), or exposure to rubbing wear or abrasion.

2.9 STENCIL (NIMM).

(Figure 2-6) Stencil markings are applied by depositing a marking agent onto a surface using a mask that has openings corresponding to the shape of the desired marking. Stencils are generated using photo-process, laser etching, or mechanical micro-cutting processes. Laser etch and mechanically cut stencils require the use of a symbol pattern that provides spacing between the individual data cells to hold the pattern together. The spacing provides a grid work of interconnecting stencil material that typically occupies approximately 36% of the individual data cell marking area. Interconnecting data cell elements that occupy less that 26% of the allotted data cell marking space can be damaged during stencil generation and handling. Interconnecting data cell elements exceeding 46% of the allotted data cell area can adversely affect symbol readability. Adhesive-backed stencils are used with marking agents that bleed under the stencil surface. Marking agents are applied to the part surface by spraying, rolling, or dabbing the marking agent through the openings in the mask. The marking agents most commonly used in conjunction with stencil marking are abrasive blast, acid etch, chemical agents, dip, barrier, chemical conversion coatings, ink (A-A-208 and A-A-56032 or equivalent) and vacuum and controlled atmosphere coatings and surface modification processes.

2.9.1 Standard Applications. Stencil marking method is used on fabrics, woods, plastics, and metal parts. Stencil marking is used on metal parts to include aluminum, anodized metal, beryllium, carbon steel, copper, corrosion resistant steel, magnesium, and titanium that have a protective phosphate finish and are covered with a clear lacquer. This marking must be applied before oiling of the item. This marking can also be used as a temporary mark for work in progress.

2.9.2 Equipment and Tools. The equipment and tools used for stencil marking consist of an air operated plunger, an ink cartridge, a metal spring and an aluminum housing.

2.9.3 Limitations. Stencil marking processes are not practical for use with irregular shaped surfaces (compound curves). Some marking agents are susceptible to damage caused by abrasion, rubbing, wear, and exposure to high temperatures. Some marking agents may also be susceptible to damage caused by immersion in liquids or prolonged exposure to liquid splash or spray.

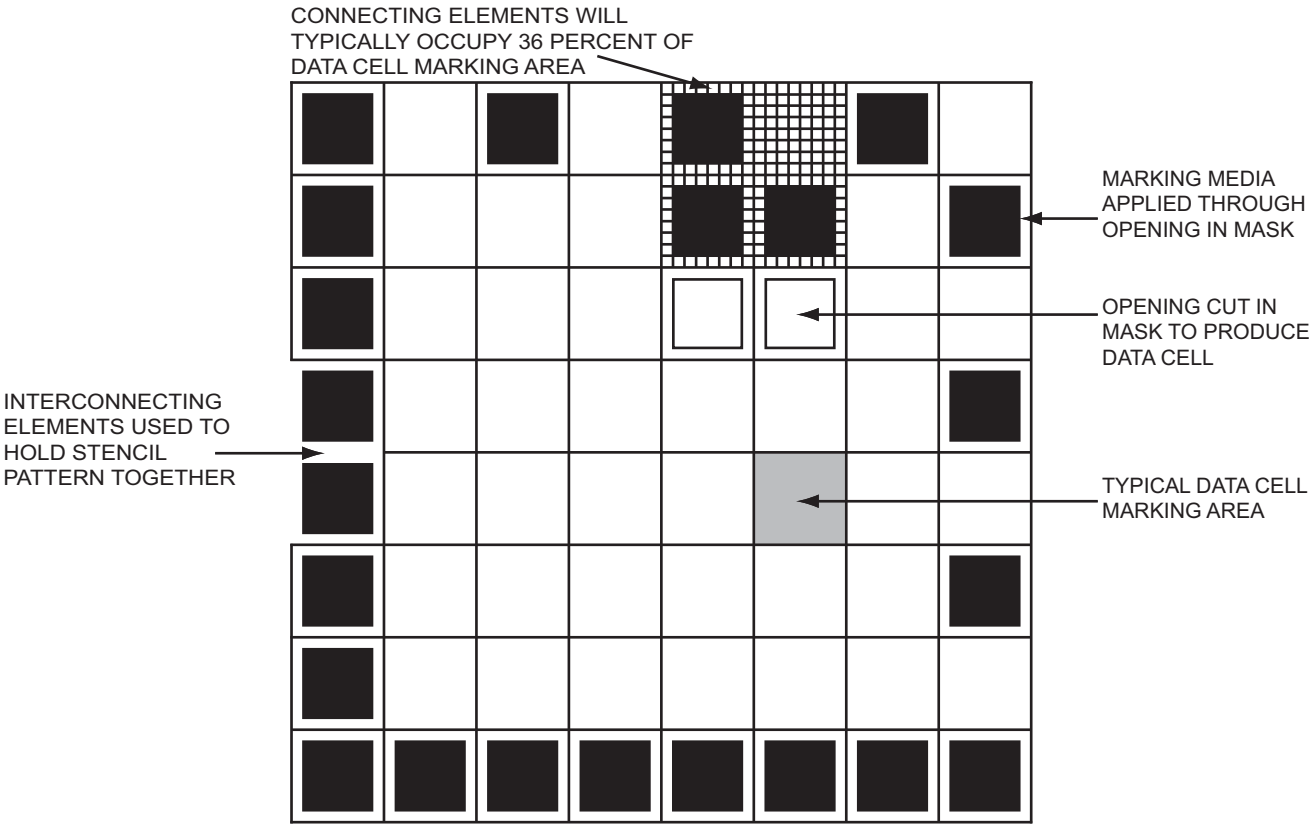

Figure 2-6. Data Matrix System Stencil Structure

Downloaded from http://www.everyspec.com

2.10 ABRASIVE BLAST (IMM).

The micro-abrasive blast marking system operates by directing a mixture of dry air and abrasive (silica, baking soda, etc.) through a small tungsten carbide nozzle at a high velocity. Manual control or automated software can control the direction and speed of the nozzle, the length of the stop-and-go pulses, and the flow pressure to provide the requested mark. Marking quality is controlled by abrasive type, air pressure, nozzle speed, and gap (nozzle to target distance). Abrasive blasting or sanding is commonly utilized to texturize surfaces prior to marking to reduce glare.

2.10.1 Standard Applications. Abrasive blast marking method can be used on most surfaces to include aluminum, anodized metal, carbon steel, copper, corrosion resistant steel, magnesium, titanium, ceramic, painted surfaces, plastics, and Teflon. The marking characteristics of abrasive blast are variable in depth or height. The micro-abrasive blast marking system operates by directing a mixture of dry air and abrasive (silica, baking soda, etc.) through a small tungsten carbide nozzle at high velocity. Software automatically controls the direction and speed of the nozzle, the length of the stop-and-go pulses, and the flow pressure to provide the requested mark. Marking quality is controlled by abrasive type, air pressure, nozzle speed, and gap (nozzle to target distance).

2.10.2 Equipment and Tools. The equipment and tools used for abrasive blast marking consist of a micro-abrasive blast system, computer, keyboard, tungsten carbide nozzle, software, and a printer.

2.10.3 Limitations. The micro-abrasive blast marking system cannot be used in humid conditions. Micro-abrasive blast cannot be used to mark irregular shaped surfaces. Micro-abrasive blast should not be used where particle contamination is an issue. Personnel should ensure that there are no corrosion or compatibility issues between the grit and the marking surface.

2.11 LASER MARKING (IMM).

Laser marking features human-readable identification, durable abrasion resistance, and resistance to environmental elements.

CAUTION

- Laser beams emitted in the visible spectrum will penetrate clear surfaces without effect. Consequently, if these devices are used to mark products with clear protective finishes, a build-up of hot gases will occur between the part surface and the coating. This condition can result in bubbling and/or breakage of the finish seal. Therefore, the use of this category of laser for marking clear-coated parts is not permitted.

- The marking laser can burn skin instantly; KEEP CLEAR during operation. Operators will ensure material being marked is not flammable by referring to the manufacturer manual. Due to fire hazard, do not place Polyvinyl Chloride (PVC) plastic in the laser. Operators must verify each laser-marking machine has an OSHA compliant fully charged fire extinguisher before they begin marking items. (See Safety Officer for guidance). Proper personal protective equipment should be worn when working with the laser to prevent injury.

2.11.1 Light Amplification by Stimulated Emission of Radiation (Laser) (IMM or NIMM). Laser is a marking method that utilizes amplified light to mark products. The heart of the laser marking device is the lasing medium, which contains atoms that store photo energy and can be stimulated to release this energy in a concentrated pulse. The medium may be a gas mixture (CO_2, Helium-neon, etc.) a semiconductor substrate (laser diode), a liquid (dye laser), or a solid crystal (Nd:YAG laser) or equivalent. Dependent upon the medium used, different light wave lengths are produced. For purposes of marking, these wave lengths can be broken into three major categories: short wave lengths, visible wave lengths, and long wave lengths. Laser etching adds heat to the surface is increased to a level that causes substrate surface melting. Laser etching can be accomplished by etching the 2-D data matrix data onto an anodized aluminum data plate or directly onto the part.

- Short Wave Length Lasers (IMM). Short wave length lasers, also known as ultra-violet lasers, utilize light in the lower end of the light spectrum and mark using a cold marking process. Lasers included within this category include excited dimer (excimer) lasers or equivalent. Short wave length lasers mark by ablation and are preferred for use in safety-critical applications. Excimer lasers or equivalent are used to mark extremely thin materials, wire insulation and very small parts.

Downloaded from http://www.everyspec.com

- Visible Wave Length Lasers (IMM). Visible wave length lasers utilize light in the visible light spectrum and produce marks using heat action or pressure. Lasers included in this category include Ruby Neodymium-doped Yttrium Lithium Fluoride (Nd:YLF), Neodymium-doped Yttrium Aluminum Garnet (Nd:YAG), Neodymium-doped Yttrium Aluminum Perovskite (Nd:YAP), Neodymium-doped Yttrium Vanadate Orthovanadate (Nd:YVO4) or equivalent. Visible wave length lasers are generally used to mark metal substrates.

- Long Wave Length Lasers (IMM). Long wave length lasers are also known as infrared lasers and they utilize light in the infrared spectrum and CO_2 or equivalent lasers are included in this category. CO_2 lasers are effective for marking organic materials such as wood, leather, and some plastics. The laser creates marks by directing a concentrated beam of coherent light onto a part surface. The marking beam is controlled via a high-speed computer that moves the beam by reflecting it off galvanometer-controlled mirrors. The movement of the laser can reach speeds of 2000 mm/sec. with an accuracy of 0.01 mm. Laser peening can be done with a single laser pulse, eliminating the need for high speed motion.

  The six different types of markings are made by changing metal color by tempering (annealing), changing plastic color through heat action on pigments embedded in the materials, changing metal color by surface melting (laser etching) (see Figure 2-7), changing surface texture by material vaporizing (laser engraving), removing coatings to expose an underlying substrate of contrasting color (coat and remove), and generating a shockwave that indents a pattern (peening). Marking quality is controlled by adjusting the machine settings such as lamp current (power in amps), pulse rate (frequency in kHz), beam velocity (mm per second) and line/dot spacing.

2.11.1.1 Standard Applications. The advantage to using laser etching on metal is increased marking speed. Excellent results can be routinely obtained at penetration depths or less than 0.001 in. Laser etching is frequently used to mark plastics that contain pigmented materials that are discolored by the laser beam to produce striking color contrast. Additives can be added to plastics that do not mark well to enhance contrast. Laser etched marking can generally be felt when rubbed with a finger and have a corn row (swipe mode) or cratered (dot mode) appearance when viewed under low (10X) magnification. The process known in the industry as Coat and Mark has been successfully demonstrated on materials used to coat aircraft aluminum surfaces and external aircraft engine components subjected to temperatures up to 2000 °F.

2.11.1.2 Limitations. Laser marking should not be used on some metals used in safety-critical parts due to cracks that can be produced in the molten metal during cooling which can extend into the underlying surface material. These cracks can expand downward if the part is stressed and/or after repeated hot and cold cycles. These conditions can lead to part failure, see Cognizant Engineer for failure criteria. Laser etching is not recommended for parts thinner than 0.050 in. Laser etching can be safely used in safety-critical applications to mark coatings applied to substrates. Laser etched markings shall not be applied directly to uncoated parts used in safety critical applications without engineering approval.

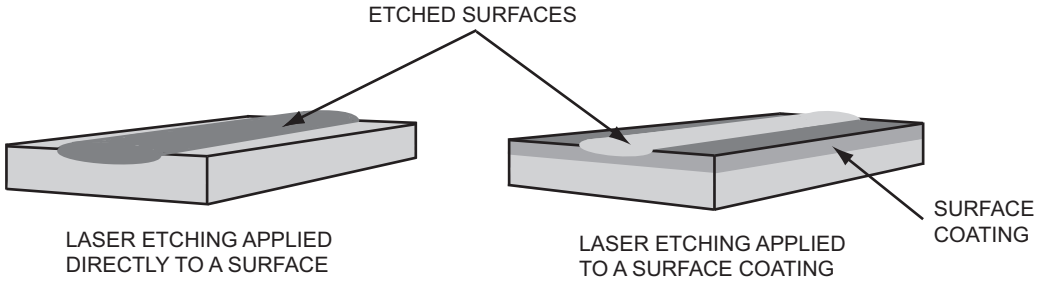

Figure 2-7. Laser Etching

Downloaded from http://www.everyspec.com

2.11.2 Laser Engineered Net Shaping (LENS) (NIMM).

(Figure 2-8) LENS utilizes the heat from an Nd:YAG laser or equivalent to form a small weld-pool on the surface of the part to be marked. Simultaneously, metallic powder is injected into the molten pool, building up a feature. 3-D Computer Aided Design (CAD) software or equivalent is used to manipulate the head or part to deposit the data matrix identification symbol. The injected metallic material does not have to be of the same material as the part, and can be chosen to be corrosion resistant, wear-resistant, or with any other desirable characteristics provided by the Cognizant Engineer. LENS-deposited materials offer a rough surface finish, providing good light reflection. LENS is compatible with all common steels, titanium, aluminum, nickel, and copper alloys. Cognizant engineer will provide approval for use on other materials. LENS gives a small heat-affected zone in the part. LENS markings can be resistant to abrasion and chemical reactions. LENS marking will protrude above the surface since this process adds material to an existing substrate.

2.11.2.1 Standard Applications. LENS marking method utilizes heat from a laser to form a small weld-pool on the surface of the part to be marked. Metallic powder is injected into the weld-pool in order to build the mark. LENS marking method is used with all common steels, titanium, aluminum, nickel, and copper alloys. Copper absorbs the laser wave length but has a more difficult time absorbing than aluminum, chromium, iron, molybdenum, nickel, platinum or tungsten. LENS marking is resistant to abrasions and chemical reactions. The marking will be raised as LENS marking adds material to the item surface.

2.11.2.2 Limitations. LENS is limited to metallic alloys only.

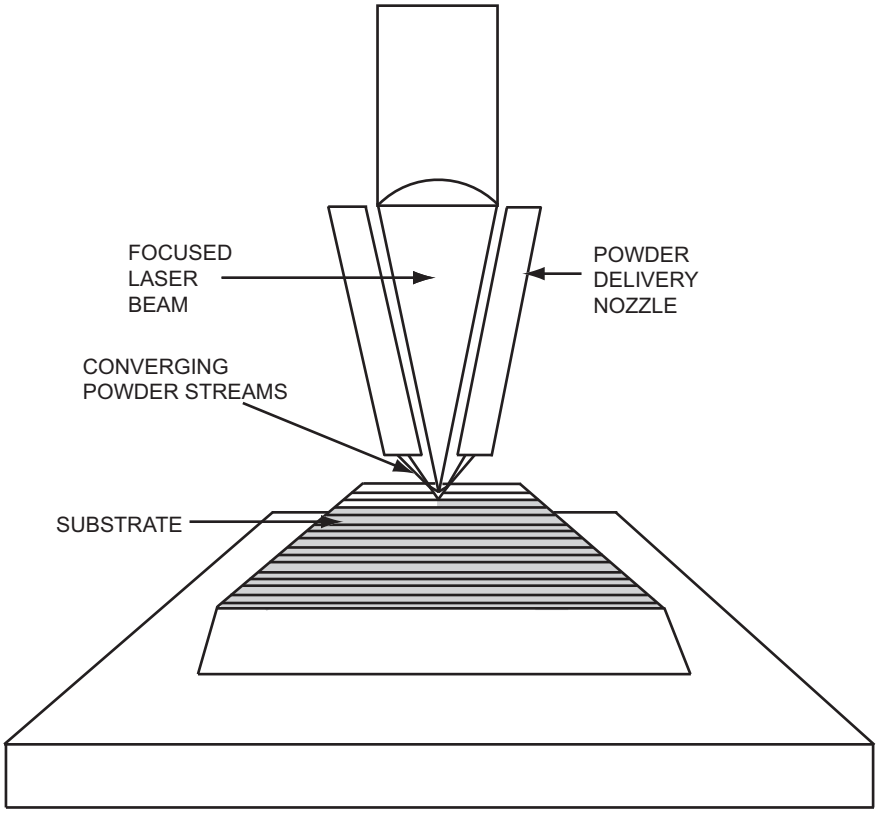

Figure 2-8. Schematic Illustration of the LENS Process

Downloaded from http://www.everyspec.com

2.12 DOT PEEN (IMM).

(Figure 2-9, Figure 2-10, and Figure 2-11) Dot-peen marking technology typically produces round indentations on a part's surface with a pneumatically or electromechanically driven pin, otherwise known as a stylus. Critical to the readability of dot peen marked symbols are the indented dot's shape, size, and spacing. The dot size and appearance are determined mostly by the stylus cone angle, marking force, and material hardness. The indented dot created should be suitable to trap or reflect light and large enough to be distinguishable from the part's surface roughness. There should also be space wide enough to accommodate varying module sizes, placement, and illumination.

NOTE

- When applying to beryllium, corrosion resistant steel, or painted surfaces, contact the Cognizant Engineer prior to proceeding.
- Dot peen marking is generally limited to parts exposed to harsh manufacturing, operational and/or refurbishment conditions. Since many of these conditions change surface properties and/or color, it may be necessary to modify the surface to restore readability. This may be accomplished using a weld cleaner such as a sandblaster to remove oxides from the surface or by back-filling the dot recesses with a removable media of contrasting color, like dry erase ink or chalk.

2.12.1 Standard Applications. Dot peen marking method can be performed on metal and non-metal parts (plastics) that may deform if metal stamped. A smooth surface should be chosen to place a 2-D matrix symbol. Marking should be accomplished prior to the application of protective coatings.

2.12.2 Equipment and Tools. Dot peen marking requires a dot peen system, software, keyboard and Liquid Crystal Display (LCD) screen.

NOTE

Stylus tips should be ground IAW AS9132A. Stylus angle and point radius for required dot size are specified in AS9132A.

2.12.3 Limitations. The dot peen method of marking should not be used in instances where the following criteria are present:

- materials that are less than 0.02 in. (0.51 mm) thick
- surfaces that are Electrical Discharge Machined (EDM), grit blasted, machined, and shot peened between 8 and 250 micro-inches (0.0002 and 0.0063 mm) using a single dot per cell
- cast surfaces between 8 and 120 micro-inches (0.0002 and 0.003 mm) using a single dot per data cell
- multi-layer fabric reinforced laminates, non-metallic materials that chip, shatter, or retain shape after impact
- real estate that is within a distance of four times the material depth from any edge, weld, or forming radius, or high pressure system components
- metals hardened above HRC 54 or highly stressed parts without cognizant engineering approval

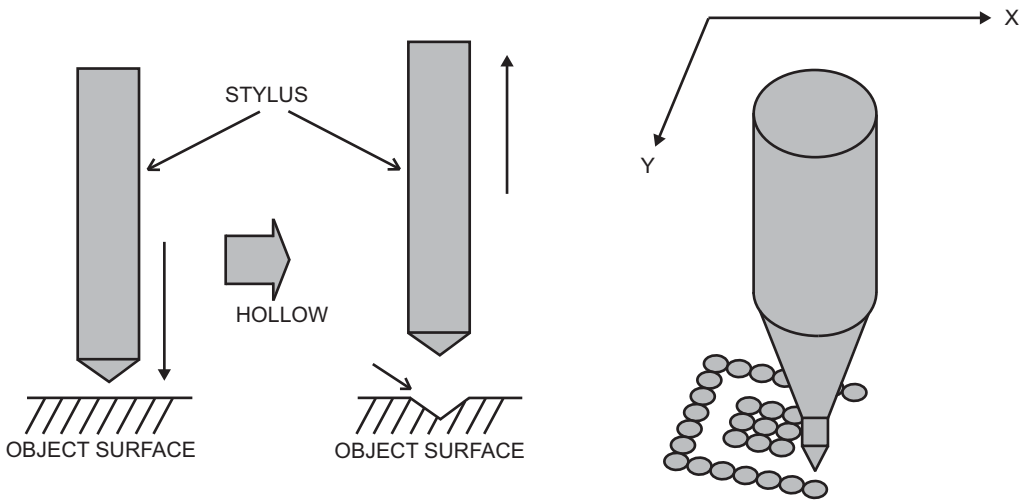

Figure 2-9. Dot Peen

Downloaded from http://www.everyspec.com

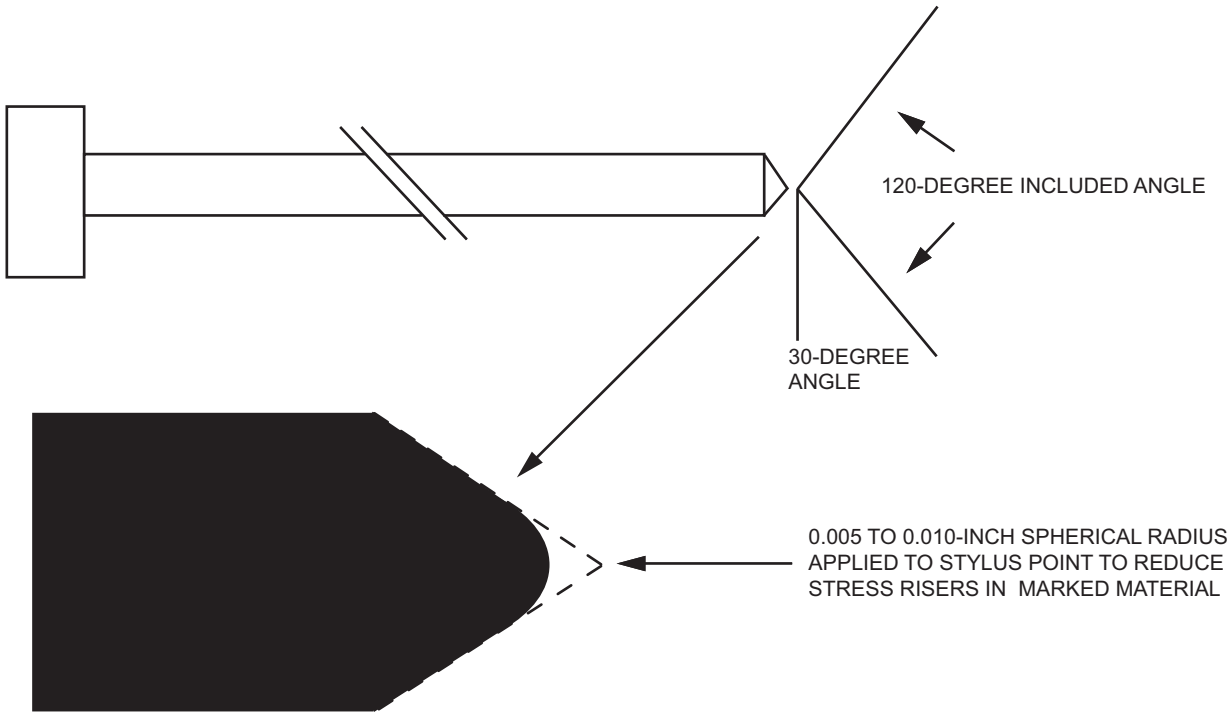

Figure 2-10. Preferred Dot Peen Configuration

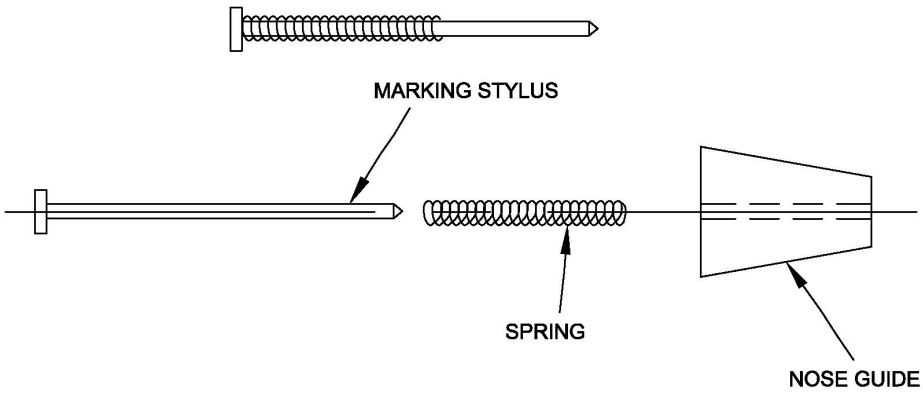

Figure 2-11. Dot Peen Breakdown

Downloaded from http://www.everyspec.com

2.13 ELECTRO-CHEMICAL MARKING (ECM) (IMM).

(Figure 2-12) ECM can be used on all conductive metallic parts. This marking technology has undergone many drastic changes since its inception in the aircraft industry in the 1940's. At the onset, marks lacked resolution, the process was not repeatable, and neutralizing to remove the corrosive agents was a necessity. But all this has changed. No longer are fixed voltage power supplies, typewriter or stylus cut stencils, and corrosive electrolytes characteristics of the methodology.

2.13.1 Standard Applications. ECM method should be used on fine surface finishes without protective coating, also high hardness parts (HRC 50 or higher). Modern power units are key elements to this revolutionized marking system. Low voltage (≤40V) processor-controlled Sequence Controlled Register (SCR) units provide precise control of power applications including Alternating Current and Direct Current (AC/DC), AC frequency, time, voltage, and power profile. The result is precise, repeatable control of the mark. Thermal and photo-sensitive silk-screen materials are now used to make the marking stencils. Today, ECM is one of the processes of choice for critical parts because it does not weaken, deform, or fracture the substrate beyond the marking depth. All metals can be marked. Today's ECM system is characterized by processor controlled power units, computer generated stencils, and benign electrolytes. Resolution meets/exceeds DPM requirements, the process is repeatable (controllable) and neutralizing after marking is no longer required. Modern electrolytic chemistry has developed electrolytes that are safe to handle, and corrosion free; marked objects do not require neutralization following the marking process. With some metal/electrolyte combinations black or white can be obtained. ECM is applied to metal surfaces prior to the application of protective coating. In the ECM method, the voltages are low to ensure operator safety. The ECM system features low acquisition cost, ease of operation, minimal operator training, outside vendors are not required to make marking stencils, applicable to short runs. Jigs/fixtures are usually not required on flat surfaces as well as simple curved surfaces because these can be marked easily, and portability.

2.13.2 Equipment and Tools. The equipment and tools used for electro-chemical etching consist of electro-chemical marking software, marking unit, electro-chemical marking system, printer, computer, keyboard and mouse.

2.13.3 Limitations. ECM is used on metallic parts such as aluminum, anodized metal, beryllium, carbon steel, copper corrosion resistant steel, magnesium, and titanium, and is not recommended for non-metallic objects characterized by compound curves of small radius. Simple curves and cylinders are easily marked and are consistent with this DPM method.

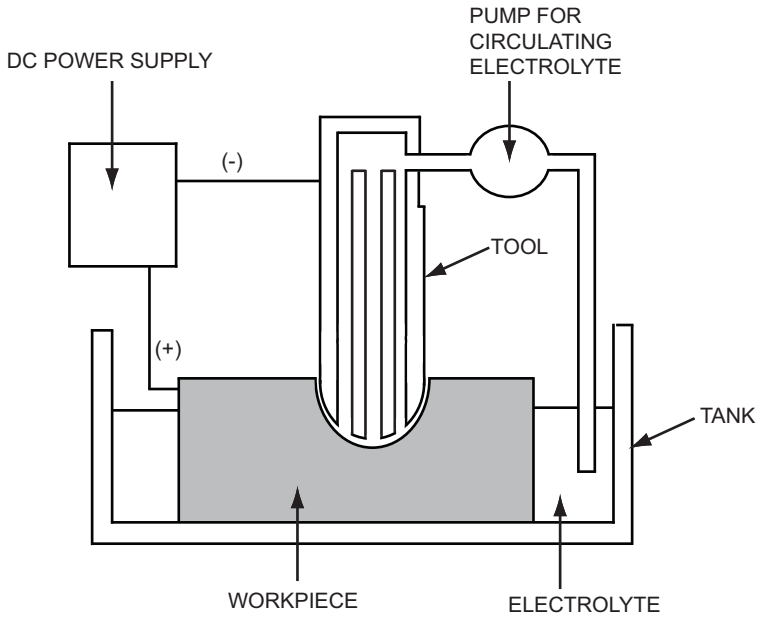

Figure 2-12. Electro-Chemical Machining

Downloaded from http://www.everyspec.com

CAUTION

- The appropriate personal protective equipment should be worn to prevent injury.
- Based on environmental conditions, the appropriate precautions should be followed to prevent injury.

2.14 ELECTRO-CHEMICAL ETCHING (ECE) (IMM).

ECE marking is accomplished by including the part to be marked in an electric circuit, and applying a DC potential across an electrolyte separating the part and the applicator electrode (essentially a sponge soaked in electrolyte). Metal is removed from the part and transformed to the applicator pad. The shape/pattern of the mark is determined by a pre-made stencil.

NOTE

Following etching, the part may be anodized and/or protected with clear coatings.

2.14.1 Standard Applications. All conductive metal parts can be marked by this process. (Anodized parts, normally considered insulated by the anodize coating, can also be marked). Etching depths can be precisely controlled and range from 0.0001 to 0.01 in. Materials as thin as 0.001 in. can be etched. Following etching, the part can be anodized or protected with a clear coating.

2.14.2 Equipment and Tools. ECE marking equipment and tools consist of stencil marking system, stencil marking software, a computer, keyboard, printer, monitor and, mouse.

2.14.3 Limitations. ECE should not be used for non-metallic objects or objects characterized by compound curves of small radius.

2.15 ENGRAVING/MILLING (IMM).

Engraved and milled markings are applied by removing material from the part surface using a computer-guided carbide-tipped cutter or diamond drag. The quality of the marking is controlled by adjusting cutter depth, air pressure, rotation, and dwell time. Marking readability can be improved by backfilling the marking recesses with a material of contrasting colors. Engraved markings can be applied to glass, plastic, phenolic, ferrous and non-ferrous metals.

2.15.1 Standard Applications. The engraving/milling marking method creates a variable depth or height marking. The surface roughness of inches (metric) is 125 micro-inches (3.2 microns) or coarser. The item is marked prior to application of finish. The protective finish that will be used once engraving has taken place is phosphate, dry film, anodize, or plating.

2.15.2 Limitations. Engraving/milling should not be applied to materials less than 0.06 in. (1.5 mm) thick; to high-pressure system components; to components subjected to severe loads; to multi-layer of fabric reinforced laminates; alloys or other metals hardened above HRC 32; or to materials that require the mark to be located a minimum distance of twice the base material thickness from any edge, including holes.

2.16 FABRIC EMBROIDERY/WEAVING (IMM).

Fabric embroidery/weaving marking method can be incorporated into the cloth during manufacture (fabric weaving) or after manufacture (fabric embroidery).

2.16.1 Standard Applications. These methods are computer controlled and generated. Fabric weaving method is utilized to create identification (ID) labels that are sewn into cloth or similar materials. Embroidery involves stitching of part ID markings into knits, cotton, leather, canvas and other similar materials using a wide range of thread sizes and materials.

2.16.2 Limitations. Fabric embroidery/weaving is generally restricted to tight weave fabrics, cannot be used with threads made of Nomex or equivalent or impregnated with additives to support use in high temperature applications.

2.17 ALUMINUM IDENTIFICATION LABELS (LPM).

Aluminum foil labels are tamper proof, resistant to chemicals and temperatures, can replace riveted steel and plastic plates, and can be used in electronics or high-voltage applications. Aluminum identification labels can be engraved in one easy step using a laser or dot peen equipment. Caution should be taken with regard to factors such as metal thickness and equipment settings to ensure that the dot peening does not cause protruding dents on the back side of the label which may interfere with the ability of the adhesive to bond effectively with the surface of the part.

2.18 ALUMINUM ID PLATES (LPM).

Aluminum ID plates are abrasion resistant, temperature resistant up to 500 °F, and are resistant to salt spray effects, exterior exposure (weather), and chemical exposure. Aluminum ID plates can be engraved in one easy step using a laser or dot peen equipment.

Downloaded from http://www.everyspec.com

2.19 STAINLESS STEEL ID PLATES (LPM).

Stainless steel ID plates are used in difficult applications on rough surfaces, and are used in extreme high temperatures (1400 °F). Stainless steel ID plates do not need a clear coat to prevent rust. Stainless steel ID plates can be engraved in one easy step using a laser or dot peen equipment.

2.20 ADHESIVE-BACKED ALUMINUM ID PLATES (LPM).

Aluminum ID plates are resistant to abrasion, grease, oils and many other chemical, are easily applied as no rivets or screws are required. Aluminum ID plates are temperature resistant (-40 ºC to +220 ºC). Aluminum ID plates offer flexible handling and provide tamper-evident properties. Aluminum ID plates have an adhesive backing that adheres to most plastics, metals, glass, and ceramics. Aluminum ID plates can be engraved in one easy step using a laser or dot peen equipment.

2.20.1 Limitations. Aluminum ID plates should not be applied to surfaces that exceed the temperature extremes, are exposed to heavy abrasive environments (without considerations for protective coatings), or are exposed to operational wear. Chemical compliance should be verified and referenced to the product specific chemical testing list. Aluminum ID plates should not be placed on surfaces with curvature greater than 20%.

2.21 POLYACRYLIC LABELS (LPM).

Polyacrylic labels are durable, flexible, and forgery resistant. Polyacrylic labels can be engraved using Nd:YAG or CO_2 lasers. Polyacrylic labels consist of a double-layered, highly cross-linked acrylic film with modified acrylic adhesive and a dimensionally stable release paper. Polyacrylic labels are resistant to abrasion, grease, oils and many other chemicals and are easily applied. No rivets or screws are needed as the label has an adhesive backing, which adheres to most plastics, metals, glass, and ceramics. The labels are temperature resistant. Polyacrylic labels can be formed into custom sizes and shapes, offer flexible handling, provide tamper evident properties, and are an economical alternative to rigid labels.

2.21.1 Limitations. Laser etched tapes should not be applied to surfaces that exceed the temperature extremes, are exposed to heavy abrasive environments (without considerations for protective coatings), and are exposed to operational wear. Chemical compliance should be verified and referenced to the product-specific chemical testing list.

2.22 THERMAL TRANSFER LABELS (LPM).

Thermal transfer labels are thermal-transfer printable, 2 mil thick, white polyimide labels with a permanent adhesive. Thermal transfer labels are ideal for high temperature labeling requirements such as PCB. Thermal transfer labels are suitable for direct wave (bottom side) and Infra-Red (IR) reflow (top side) PCB applications. Thermal transfer labels are designed to withstand fluxes, cleaning solvents and molten solder encountered in the manufacture of printed circuit boards. Thermal transfer labels offer excellent contrast for bar code applications. With a flash exposure service temperature of 538 ºC (1000 ºF), thermal transfer labels are suitable for the harshest high temperature applications. Thermal transfer polyimide labels are resistant to repeated abrasion. When applying to a cast surface, utilize epoxy when attaching the 2-D data matrix label to the part. Cast surfaces have ridges that will prevent the tape from sticking if not filled with epoxy.

2.22.1 Limitations. Thermal transfer polyimide labels meet the requirements of MIL-STD-202 method 215J. These labels have a good resistance to fluids and repeated cleaning.

Downloaded from http://www.everyspec.com

Table 2-1. Label Considerations

Item	Label Construction		Additional Considerations
	Substrate	Laminate	
	PAPER		(Example 61002-IIB2a)
1A	70# Paper	P-propylene	Least expensive durable label. Cardboard, smooth surfaces.
1B	70# Paper	P-propylene	For frozen environment.
1C	70# Paper	P-propylene	Removable adhesive.
1D	T. Transfer	P-propylene	Thermal transfer printing.
	THERMAL PAPER		(Example 61002-IIC2a)
2A	Thermal	N/A	Buff colored label. For indoor use only.
2B	Thermal	N/A	For low temperatures or frozen environments.
2C	Thermal	N/A	For “no stick” surfaces.
2D	Thermal	N/A	Removal adhesive; can be repositioned.
	VINYL		(Example 61002-IIIA1b)
3A	Vinyl	P-propylene	Most economic choice for intermittent indoor exposure.
3B	Vinyl	P-propylene	For “no stick” and textured surface (office equipment, etc.).
3C	Vinyl	P-propylene	Removable adhesive. Can be repositioned.
3D	Vinyl	P-propylene	Good for most untreated metal surfaces.
3E	Destructible	P-propylene	For destructible asset management labels.
3F	PVF	PVF	UV resistant label for extended outdoor use.
3G	PVF	PVF	UV resistant label for outdoor use, especially for untreated metal.
	SPECIAL PLASTICS		(Example 61002-IIA1g)
4A	P-propylene	P-propylene	Substitute for 3A. Better tear resistance.
4B	P-propylene	P-propylene	Acid resistant. Especially good for “no stick” surfaces.
4C	Acrylic	PVF	UV resistant label for extended outdoor use.
4D	----	Red	Red overlaminating film for “photocopy proof” labels.
4E	----	Black	Black overlaminating film for non-human readable labels.
	POLYESTER		(Example 61002-IIA1b)
5A	Polyester	Polyester	Best all around durable label.
5B	Polyester	Piggyback	Used for painting and staining operations.
5C	Metallized	Polyester	Metal tag appearance - asset management.
5D	Met. “VOID”	Polyester	Metal tag appearance - asset management; tamper evident.

Downloaded from http://www.everyspec.com

Table 2-1. Label Considerations - Continued

Item	Label Construction		Additional Considerations
	Substrate	Laminate	
	POLYESTER - Cont.		(Example 61002-IIA1b) - Cont.
5E	White "VOID"	Polyester	Asset management; tamper evident.
5F	Polyester	Polyester	For automatic application. Same properties as 5A.
5G	Polyester	Polyester	Autoclave resistant. Excellent for glass surfaces.
5H	Polyester	Polyester	For untreated metal surfaces.
5I	Polyester	PVF	UV resistant label for extended outdoor usage.
5J	High Temp Polyester	Polyester	Non-solder side of Printed Circuit Boards (PCBs) during manufacturing process.
5K	High Temp Polyester	Polyester	Non-solder side of PCBs; laminate on backing paper.
5L	High Temp Polyester	Polyimide	Low cost alternative for solder side of PCBs.
	POLYIMIDE		(Example 61002-IIIA2c)
6A	Polyimide	Polyimide	General use for solder side use in PCB manufacture.
6B	Polyimide	Polyimide	Higher temperatures than 6A.
6C	Polyimide	Polyimide	Highest temperature performance for solder side of PCBs.

Reference: MIL-PRF-61002, Pressure-Sensitive Adhesive Labels for Bar Coding

Downloaded from http://www.everyspec.com

Downloaded from http://www.everyspec.com

CHAPTER 3
PRE-MARKING ACTIVITIES

3.1 ITEM SPECIFIC DATA.

The marking activity shall include Item specific data which will include:

a. Location identification

b. Mark method to be used

c. Tooling and fixtures as required

d. Format requirements for 2-Dimensional (2-D) data matrix mark

e. Bill of material for data plate/label specifications as required

f. If prototyping is required, appropriate funding may need to be provided

g. Any other exceptions or additions to this manual that references beyond the scope of this manual

3.2 OPPORTUNISTIC MARKING.

NOTE

- Interrogation of the full repair process may be necessary prior to determining marking opportunity.
- Disassembly at any level is not required for the sole purpose of marking.

a. Marking shall be accomplished in coordination with maintenance process.

b. Marking shall be accomplished with direction from the Cognizant Engineer and Equipment Specialist.

c. The marking activity shall add to the Work Control Document (WCD) or routing document the 2-D data matrix marking requirements.

3.3 SURFACE PREPARATION.

NOTE

Surface preparations shall be performed in accordance with existing technical data and/or special instructions prior to application of the Unique Item Identifier (UII).

3.3.1 Scope. This section will provide the surface preparation requirements for the direct application of Unique Identification (UID) labels onto specific surfaces. The proceeding steps will outline how to properly clean the surface and help prevent the onset of corrosion and contamination on the surface, which could lead to premature label adhesive failure. The proceeding steps will ensure the longest possible service life of the UID label preventing the numerous problems that can arise when a component does not have an identification label attached.

3.3.2 Usage. This section was prepared for, but not limited to, the application of UID information onto various aircraft components utilizing self-adhesive labels. Label material covered includes polyacrylic film, polyimide film, and other forms of thermal transfer label materials. These procedures can also be used to perform surface preparation for application of metallic labels. The procedures will be applicable for various surfaces including anodized and/or alodined aluminum, electrical equipment, and phenolic surfaces. Phenolic material shall be classified as a material that has thermally set polymerization between resin and a base material such as paper, glass, or cotton, materials commonly found in circuit cards.

This document was prepared assuming that the labels will be attached while the item is going through overhaul and therefore the technician has full access to the individual component.

3.3.3 Materials

NOTE

MIL-PRF-87937 Type III cleaners are intended for full strength application with no dilution. They contain small amounts of solvents, detergents, and thickening agents, which make them cling very effective in emulsifying and/or cleaning heavy deposits of hydraulic fluids, oils, greases, and carbon. To be most effective, these materials are applied full strength with no pre-rinsing of the surface, allowed to dwell 5 to 15 minutes, agitated with a non-metallic bristle brush, and then rinsed thoroughly with water. These cleaners are not intended for and shall not be used on transparent plastic aircraft canopies, windows, and windshield/windscreens.

1. Cleaners (TO 1-1-691) MIL-PRF-87937, Type III, or equivalent

2. Cloth, Cheesecloth, CCC-C-440, or equivalent

Downloaded from http://www.everyspec.com

3. Gloves, MIL-G-87066, or equivalent

4. Isopropyl Alcohol, TT-I-735, or equivalent

5. Material requirements for electrical equipment are listed in TO 00-25-234

3.3.4 Preparation. Cleaning shall be performed IAW TO 1-1-169, Cleaning and Corrosion Prevention and Control, Aerospace and Non-Aerospace Equipment. For electrical equipment, cleaning and surface preparation shall be in accordance with IAW TO 00-25-234. Observe all warnings and cautions contained in these documents.

a. Surface should be dry and free from any visible contaminants. If not, wipe with dry cheesecloth, CCC-C-440, or equivalent.

b. For metallic surfaces, apply Isopropyl Alcohol, TT-I-735, or MIL-PRF-87937 Type III, or equivalent, liberally to the surface, wipe surface to be labeled until the surface is free from visible contaminants, dirt, hydraulic fluid, etc. and dry with cheesecloth. For electrical equipment, cleaning and surface preparation should be done IAW TO 00-25-234.

c. Allow area to dry.

Downloaded from http://www.everyspec.com

CHAPTER 4
INSPECTION ACTIVITIES

4.1 GENERAL.

This chapter will outline the inspection activities for Item Unique Item Identification (IUID).

NOTE

A good mark is machine-readable, of high contrast, easy to verify, and easy to validate.

4.2 DOT PEEN INSPECTION.

NOTE

All debris and corrosion must be removed from the UII mark prior to inspection.

a. Visually inspect for UII mark. If the item is not marked and marking is required, refer to Chapter 5.

NOTE

If the mark continues to receive a FAIL condition after numerous attempts, contact Cognizant Engineer or equipment specialist for directions.

b. Using a handheld reader or equivalent, reader should display an unused error correction of ≥25%.

Result 1: Reader displays an unused error correction of ≥25%. Proceed to step c.

Result 2: Reader displays an unused error correction of <25%. Proceed to step d.

c. If the mark receives an unused error correction of ≥25%, item passes inspection.

d. If the mark receives an unused error correction of <25%, contact the Cognizant Engineer for remarking direction and location.

4.3 LASER MARK INSPECTION.

NOTE

All debris and corrosion must be removed from the UII mark prior to inspection.

a. Visually inspect for UII mark. If the item is not marked and marking is required, refer to Chapter 5.

NOTE

Damage may include scratches, wear and tear, or environmental deterioration.

b. Visually inspect for UII mark. If item is not marked and marking is required, refer to Chapter 5.

NOTE

If the mark continues to receive a FAIL condition after numerous attempts, and the item is a label or Identification (ID) plate, restoring is authorized. (See Chapter 5, Restoring Items). If not a label or ID plate, contact Cognizant Engineer or equipment specialist for directions.

c. If the mark is damaged, read the mark and verify that it receives a PASS condition.

Result 1: Reader displays a PASS condition (an unused error correction of ≥25% or readability of ≤75%). Proceed to step d.

Result 2: Reader displays a FAIL condition (an unused error correct of <25% or readability of >75%). Proceed to step e.

d. If the mark receives a PASS condition, item passes inspection.

e. If the mark receives a FAIL condition up to five times, contact the Cognizant Engineer for restoring direction and location. (See Chapter 5, Restoring Items).

Downloaded from http://www.everyspec.com

Downloaded from http://www.everyspec.com

CHAPTER 5
MARKING PROCESS DETERMINATION AND MARKING METHOD PROCEDURES

5.1 SUPPORT EQUIPMENT INSPECTION.

Perform the following steps to inspect support equipment.

a. Ensure periodic maintenance has been accomplished and recorded in the Industrial Support Equipment Record.

b. If maintenance is due, perform maintenance by following the manufacturer's equipment maintenance procedures.

NOTE

Calibration and inspection of equipment may be required on start up of marking effort. Refer to equipment manuals for calibration and inspection instructions.

c. Ensure power is supplied to equipment.

d. Turn on equipment.

e. Calibrate equipment as required.

5.2 CALIBRATION OF VERIFIER.

As required, perform the following steps to calibrate the RVSI Hawkeye verifier:

a. Open viewer software.

b. Click LIVE VIDEO button to toggle video on.

c. On the calibration test card, locate the sample data matrix with 16x16 cell size, 0.24 in. data matrix size, 50.74% contrast and position the card with this sample matrix centered within the viewing area of the camera.

d. Click LIVE VIDEO button to toggle video off.

e. Go to the READER drop-down menu and select CALIBRATE.

f. In the CALIBRATION AND LIGHTING ADJUSTMENT window, click CALIBRATE.

g. CALIBRATION SUCCESS window will appear; click OK.

h. Calibration of verifier is complete; exit software.

As required, perform the following steps to calibrate the Cognex verifier:

a. From the PLATES drop-down menu, click the VERIFY button.

b. Click the CONNECT button.

c. Click the FOCUS button.

d. Center the matrix under the camera and focus, then click the CANCEL button.

e. Click CALIBRATE and follow the on-screen instructions.

f. The previous focus routine sets up the calibration card under camera.

g. Press the NEXT button when done.

h. When brightness adjustment is complete and indicated, press the NEXT button.

i. Adjust the camera height to get the highest auto-sharpness value and press the NEXT button.

j. Follow the online instructions for step four calibration process and press the NEXT button.

k. Follow the online instructions for step five calibration process and press the NEXT button.

l. Read the height of the camera and darkfield light.

m. Enter in the values in the corresponding text zones.

n. Select the darkfield light angle that the camera was set to in step one.

o. Press NEXT.

p. Calibration of verifier is complete; exit software.

Downloaded from http://www.everyspec.com

5.3 GRADING THE MARK.

Minimum image quality levels for direct marking and 2-Dimensional (2-D) label print shall be as follows:

5.3.1 Direct Marking. For Data Matrix Code symbols directly marked on items including but not limited to: dot-peen, laser, chemical etch or inkjet methods [plus direct part mark (DPM) methods applied to labels or nameplates], the minimum grade level of the mark (as defined in AIM DPM-1-2006 DPM Quality Guideline) shall be as listed below.

DPM 2.0/7.5-25/640/(45Q|30Q|90|30T), where:

a. Minimum print quality grade = 2.0

b. X dimension range of the application = 7.5-25 mils

c. Inspection wavelength = 640 nanometers ±20 nanometers

d. Lighting conditions = Medium Angle Four Direction (45Q) or Low Angle Four Direction (30Q) or Diffuse Perpendicular (90) or Low Angle Two Direction (30T)

Furthermore, any part containing a curved surface such that there is more than a 3 degree angle of slope over any part of the data matrix symbol area shall be acceptable with the following overall quality as listed below.

DPM 1.0/7.5-25/640/(45Q|30Q|90|30T|D), where:

a. Minimum print quality grade = 1.0

b. X dimension range of the application = 7.5-25 mils

c. Inspection wavelength = 640 nanometers ±20 nanometers

d. Lighting conditions = Medium Angle Four Direction (45Q) or Low Angle Four Direction (30Q) or Low Angle Two Direction (30T), Diffuse Perpendicular (90) or Diffuse Off Axis (D)

5.3.2 2-D Label Print. For Data Matrix Code symbols printed on labels, the minimum grade level of the mark (as defined in AIM DPM-1-2006 Direct Part Mark Quality Guideline) shall be as listed below.

DPM 2.0/7.5-25/640/(45Q|30Q|90), where:

a. Minimum print quality grade = 2.0

b. X dimension range of the application = 7.5-25 mils

c. Inspection wavelength = 640 nanometers ±20 nanometers

d. Lighting conditions = Medium Angle Four Direction (45Q) or Low Angle Four Direction (30Q) or Diffuse Perpendicular (90).

5.4 DOT PEEN MARKING.

5.4.1 Data Matrix Creation. Perform the following steps for data matrix creation using part marking software.

NOTE

- Only certified personnel shall be permitted to operate the dot peen equipment.
- Follow procedures outlined on monitor screen if not specifically called out in this manual, as the following steps are general in nature.
- For part marking equipment and verification process, see technical data for specifics.

a. Log onto the part marking software.

b. Read and accept the DoD warning.

Result: Job queue window will open.

c. If current mark is not in job queue, click the CANCEL button.

d. To create a new data plate, click on the PLATES menu then select NEW on the drop-down menu, or to open an existing template, click on the PLATES menu, then select OPEN to open the appropriate file. From the first drop-down menu in the left hand column, under MANDATORY ZONES, select CAGE, as required.

e. From the second drop-down menu in the left hand column, under MANDATORY ZONES, select P/N, as required.

f. From the third drop-down menu in the left hand column, under MANDATORY ZONES, select S/N, as required.

NOTE

Always use ALL CAPS in data fields.

g. Enter Legacy data (CAGE, P/N, and S/N) as required in MANDATORY ZONES fields, in the right hand column.

Downloaded from http://www.everyspec.com

h. Click the ? button to check registry in order to verify whether or not the mark is unique.

i. Click the Ok button to verify data.

Result 1: NO MATCHING PLATES FOUND IN ANY OF THE LOCAL DATABASES pop up window will display. Click the OK button.

Result 2: If RESTORE pop up window is displayed, refer to paragraph 5.6.2, Restoring Items, for instructions.

j. If creating an 18S data matrix, enter the ALC's CAGE CODE in the EXTRA PLATE INFORMATION section, MA CAGE field, as required.

NOTE

In the EXTRA PLATE INFORMATION section, add additional information as directed by the 2-D data matrix technical data. Additional information (NSN, MANUF DATE, CONTRACT #) can be concatenated in the data matrix, but is not viewable in HRI format.

k. Select the number of HRI zones in the OTHER ZONES section to print, as required.

l. In the OTHER ZONES section, check the MARK box.

m. Select appropriate data from the drop-down menu in the first column, in the OTHER ZONES section as dictated by the Cognizant Engineer, as required.

n. Select appropriate data from the drop-down menu in the second column, in the OTHER ZONES section as dictated by the Cognizant Engineer, as required.

o. Enter the appropriate data in the third field, in the OTHER ZONES section as dictated by the Cognizant Engineer, as required.

p. Verify that the data in MARKING STYLE, CHARACTER SIZE, and FONT in the MARKING OPTIONS section is correct. If changes are required, enter the MARKING STYLE, CHARACTER SIZE, and FONT in the MARKING OPTIONS from the drop-down boxes.

q. Verify that the data in SIZE, SPACING, and FILL % is correct. If changes are required, enter the SIZE, SPACING, and FILL % in the 2-D MATRIX section from the drop-down menu.

NOTE

In the spacing drop-down menu in the 2-D MATRIX section, select the size as dictated by the provided technical data.

r. Verify data in PLATE STYLE is correct. If changes are required, select the PLATE STYLE format from the PLATE STYLE drop-down menu.

s. Once data is entered correctly, a green button will illuminate at the bottom of the screen.

t. Click LINK button (next to the REFRESH button) at the top of the window.

u. Click the SAVE button.

Result: Plate name will be displayed as concatenated UII.

v. To open an existing template, click on the PLATES menu then select OPEN to open the appropriate file.

w. Make applicable changes to the template and save by clicking the SAVE button.

x. Click MARK button to access the PLUG-IN button.

y. Click the PLUG-IN button to arrange the data fields for 2-D data matrix mark, as required.

z. From the FILE drop-down menu, select UPDATE PROJECT, then from the FILE drop-down menu, select EXIT to accept.

aa. Ensure fixtures and jigs are installed as required.

ab. Perform the steps in Chapter 3, paragraph 3.3, Surface Preparation.

ac. Place item to be marked on the cart.

ad. From the PLUG IN window, position the X/Y axis to adjust the marking fields, as required.

NOTE

Set OBJECT PARAMETERS MARKING FORCE and Z GAP, in the PLUG IN window, based on operating instructions.

ae. Click the M icon on the top bar menu to go to MARK PROJECT screen to trace mark prior to part marking.

Downloaded from http://www.everyspec.com

af. In the pop-up window, select the desired zones to trace.

ag. Select TRACE CONTENTS ONLY from the drop-down menu in the TRACE BEHAVIOUR field.

ah. Click TRACE SELECT OBJECTS box to select.

Result: Stylus will trace the outline of the mark prior to marking.

ai. Visually inspect and confirm the traced marking location prior to marking the part.

aj. Click the CANCEL button once the marking location has been visually inspected.

ak. In the PLUG IN box, click the CROSS RULER icon on the top bar menu to begin the marking process.

al. Click the red X at the top of the window to exit.

CAUTION

Proper personal protective equipment should be worn to prevent bodily injury.

am. Push the green START button on the controller.

an. Push the red STOP button on the controller if the mark is not properly lined up with the stylus.

ao. Refer to paragraph 5.4.2, Initial Dot Peen Inspection, for inspection instructions.

ap. Once the mark has been visually inspected and meets marking criteria, press the green START button on the controller to proceed.

NOTE

- The reader will illuminate green when the mark is validated.
- If the reader illuminates in red after several attempts and the mark does not meet validation criteria, refer to paragraph 5.5.1, Data Matrix Creation, for remarking instructions.

aq. Use the hand held reader to validate the mark readability by centering the green illuminated line within the 2-D data matrix for proper validation.

ar. Connect to the applicable verification software to verify the mark.

as. Perform verification of the 2-D data matrix mark by following the on-screen prompts.

5.4.2 Initial Dot Peen Inspection. Perform the following steps for visual inspection:

NOTE

An aided visual inspection using a 10X magnifier may be required.

a. Visually inspect the item for mushrooming, overlapping, cracks, etc.

b. If the mark fails the visual inspection, contact the Cognizant Engineer for remarking authority and location.

c. If the mark passes visual inspection, inspection is complete.

5.5 LASER MARKING.

5.5.1 Data Matrix Creation. Perform the following steps to create a laser mark.

NOTE

- The name of part marking software on the desktop may differ.
- For restoring a UII, refer to paragraph 5.6.2, Restoring Items.

a. Log onto part marking software.

b. Read and accept the DoD warning.

Result: Job queue window will open.

c. If current mark is not in job queue, click the CANCEL button.

d. To create a new data plate, click on the PLATES menu then select NEW on the drop-down menu, or to open an existing template, click on the PLATES menu, then select OPEN to open the appropriate file.

e. From the first drop-down menu in the left hand column, under MANDATORY ZONES, select CAGE. as required.

f. From the second drop-down menu in the left hand column, under MANDATORY ZONES, select P/N, as required.

Downloaded from http://www.everyspec.com

g. From the third drop-down menu in the left hand column, under MANDATORY ZONES, select S/N, as required.

NOTE

Always use ALL CAPS in data fields.

h. Enter Legacy data (CAGE, P/N, and S/N) as required in MANDATORY ZONES fields, in the right hand column.

i. Click the ? button to check registry in order to verify whether or not the mark is unique.

j. Click the Ok button to verify data.

Result 1: NO MATCHING PLATES FOUND IN ANY OF THE LOCAL DATABASES pop up window will display. Click the OK button.

Result 2: If RESTORE pop up window is displayed, refer to paragraph 5.6.2, Restoring Items, for instructions.

k. If creating an 18S data matrix, enter the ALC's CAGE CODE in the EXTRA PLATE INFORMATION section, MA CAGE field, as required.

NOTE

In the EXTRA PLATE INFORMATION section, add additional information as directed by the 2-D data matrix technical data. Additional information (NSN, MANUF DATE, CONTRACT #) can be concatenated in the data matrix, but is not viewable in HRI format.

l. Select the number of HRI zones in the OTHER ZONE section to print as dictated by the Cognizant Engineer.

m. In the OTHER ZONE section, check the MARK box.

n. Select appropriate data from the drop-down menu in the first column, in the OTHER ZONES section as dictated by the Cognizant Engineer.

o. Select appropriate data from the drop-down menu in the second column, in the OTHER ZONES section as dictated by the Cognizant Engineer.

p. Enter the appropriate data in the third field, in the OTHER ZONES section as dictated by the Cognizant Engineer.

q. Verify that the data in MARKING STYLE, CHARACTER SIZE, and FONT in the MARKING OPTIONS section is correct. If changes are required, enter the MARKING STYLE, CHARACTER SIZE, and FONT in the MARKING OPTIONS from the drop-down boxes.

r. Verify that the data in SIZE, SPACING, and FILL % is correct. If changes are required, enter the SIZE, SPACING, and FILL % in the 2-D MATRIX section from the drop-down menu.

NOTE

In the spacing drop-down menu in the 2-D MATRIX section, select the smallest size available.

s. Verify data in PLATE STYLE is correct. If changes are required, select the PLATE STYLE format from the PLATE STYLE drop-down menu.

t. Once data is entered correctly, a green button will illuminate at the bottom of the screen.

u. Click LINK button (next to the REFRESH button) at the top of the window.

v. Click the SAVE button.

Result: Plate name will be displayed as concatenated UII.

w. If this is a new plate, and the creation of a template for further use is preferred, check the TEMPLATE box, then enter TEMPLATE, PN and actual P/N, as required. Change name as required, or click SAVE button.

x. Click MARK button to access the PLUG-IN button.

y. Click the PLUG-IN button to arrange the data fields for 2-D data matrix mark, as required.

z. From the FILE drop-down menu, select UPDATE PROJECT, then from the FILE drop-down menu, select EXIT to accept.

aa. Place marking material in the laser cart.

ab. Turn on laser, if not already powered up.

ac. Ensure the laser is in the home position prior to initial use. If not in the home position, follow the proceeding steps (1) through (6):

(1) From the laser cart display, ensure SETUP is highlighted. Press the ENTER button.

Downloaded from http://www.everyspec.com

(2) From the laser cart display, use the down arrow to highlight DIODE POINTER.

(3) From the laser cart display, use the wheel to toggle DIODE POINTER to YES. Press the ENTER button to accept.

Result: Laser pointer within the cart will illuminate RED in color.

(4) From the laser cart display, use the right arrow to highlight SERVICE. Press the ENTER button to accept.

(5) From the laser cart display, use arrow buttons to highlight MOVE X/Y. Press the ENTER button to accept.

NOTE

This will allow for manual adjustments to the laser for appropriate setup and position.

(6) Using the arrow buttons, move the laser X/Y-axis positions down and over to clear obstacles, and to within 1/8 in. from the top of the left hand corner of the item.

CAUTION

Cutting blade must be to the left of the marking area, as damage to the laser and material can occur if not in the appropriate position.

ad. Once the laser is in the correct home position, press ENTER to accept.

ae. Return to part marking software.

af. Click the MARK button to apply the 2-D data matrix mark to the item.

ag. WAS IT A SUCCESSFUL MARK? pop up window will appear.

ah. Return to laser. Use arrow keys on the laser cart display, highlight JOBS, and press ENTER to accept.

Result: Document1 will appear.

ai. Press ENTER to accept.

Result: RUN will be highlighted within a menu of choices.

aj. Press ENTER to accept.

Result: Label will print.

ak. When laser printing is complete, open laser compartment, cut and remove label from compartment, then close laser compartment.

al. Return to part marking software.

am. Leaving all current windows open (including WAS IT A SUCCESSFUL MARK?), proceed to paragraph 5.6, 2-D Data Matrix Verification Process.

NOTE

Open windows may need to be minimized.

5.6 2-D DATA MATRIX VERIFICATION PROCESS.

Perform the following steps for 2-D data matrix verification.

NOTE

- The software does not automatically confirm validation of the UII or verify the grade of the 2-D data matrix mark. The marking technician must select validation and verification from the menu.
- When performing verification of mark, adjustments of the verifier may be required to obtain a proper pass condition.
- If the 2-D data matrix mark continues to receive a failure, contact the Cognizant Engineer for remarking authority and location.
- Ensure proper lighting is available. Dim ambient lighting as well as excessive ambient lighting will adversely affect verification results.

a. Open UID CHECKER shortcut.

b. Click the LIVE VIDEO button to power up the camera.

c. Remove the dust cover, place the item under the verifier, and locate the 2-D data matrix mark.

d. Center the UID on the screen by moving the 2-D data matrix label beneath the camera.

e. Adjust the camera as needed.

f. Click the LIVE VIDEO button.

Downloaded from http://www.everyspec.com

g. Click READ UID MARK button for verification and grade of the label.

Result 1: If the 2-D data matrix mark is UII compliant, the UID MARK VALIDATION RESULTS field will be illuminated in green. Proceed to step h.

Result 2: If the 2-D data matrix mark is not UII compliant, the UID MARK VALIDATION RESULTS field will be illuminated in red. If 2-D data matrix mark is non-compliant, go to paragraph 5.6.1, Reprocessing Items, for instructions.

h. Click SAVE RESULTS button.

i. Return to part marking software.

j. Answer the WAS IT A SUCCESSFUL MARK? window based on verification results.

k. If the mark is unsuccessful, continue to paragraph 5.6.1, Reprocessing Items, for instructions.

l. If the mark is successful, delete Document1 by performing steps (1) through (5) below.

(1) Return to cart. At the cart display, highlight JOBS, press ENTER to accept.

Result: Document1 will appear.

(2) Press ENTER to accept.

Result: RUN will be highlighted within a menu of choices.

(3) Scroll down to bottom of the menu, and select DELETE.

(4) Press ENTER to accept.

Result: Document1 will be deleted and screen will be blank.

(5) Return to part marking software.

m. Click the CANCEL button. To exit the software, go to the FILE drop-down menu and select the EXIT button.

n. To exit the camera software, go to the FILE drop-down menu and select the EXIT button.

o. Close all part marking software applications as required.

p. Log off and shut down the equipment when appropriate.

5.6.1 Reprocessing Items. Perform the following steps to reprocess an item that fails verification and is not UII compliant.

a. Return to the part marking software.

b. Answer the WAS IT A SUCCESSFUL MARK? window based on verification results.

Result: If the mark was unsuccessful, PLEASE MARK AGAIN pop up window will display. Click the OK button to accept.

c. On the PLATE SETUP screen, perform analysis of current data to ensure accurate input.

d. Click the SAVE button once data has been verified.

e. Click MARK button to access the PLUG-IN button.

f. Click the PLUG-IN button to arrange the data fields for 2-D data matrix mark, as required.

g. From the FILE drop-down menu, select UPDATE PROJECT, then from the FILE drop-down menu, select EXIT to accept.

h. Return to cart.

i. Place marking material or part in cart.

j. Turn on, if not already powered up.

k. Perform the following steps l. through w. for laser operation.

NOTE

For dot peen marking, refer to paragraph 5.4.1, Data Matrix Creation for instructions.

l. Ensure the laser is in the home position prior to initial use. If not in the home position, follow the proceeding steps (1) through (6):

(1) From the laser cart display, ensure SETUP is highlighted. Press the ENTER button.

(2) From the laser cart display, use the down arrow to highlight DIODE POINTER.

(3) From the laser cart display, use the wheel to toggle DIODE POINTER to YES. Press the ENTER button to accept.

Downloaded from http://www.everyspec.com

(4) From the laser cart display, use the right arrow to highlight SERVICE. Press the ENTER button to accept.

(5) From the laser cart display, use arrow buttons to highlight MOVE X/Y. Press the ENTER button to accept.

NOTE

This will allow for manual adjustments to the laser for appropriate setup and position.

(6) Using the arrow buttons, move the laser X/Y-axis positions down and over to clear obstacles, and to within 1/8 in. from the top of the left hand corner of the item.

CAUTION

Cutting blade must be to the left of the marking area, as damage to the laser and material can occur if not in the appropriate position.

m. Once the laser is in the correct home position, press ENTER to accept.

n. Return to part marking software.

o. Click the MARK button to apply the 2-D data matrix mark to the item.

p. WAS IT A SUCCESSFUL MARK? pop up window will appear.

q. Return to marking cart. Use arrow keys on the cart display, and highlight JOBS, press ENTER to accept.

Result: Document1 will appear.

r. Press ENTER to accept.

Result: RUN will be highlighted within a menu of choices.

s. Press ENTER to accept.

Result: 2-D matrix will be created.

t. When marking is complete, remove item from cart.

u. Return to part marking software.

v. Leaving all current windows open (including WAS IT A SUCCESSFUL MARK?), open UID CHECKER.

NOTE

Open windows may need to be minimized.

w. Return to paragraph 5.6, 2-D Data Matrix Verification Process, and follow steps within for verification instructions.

5.6.2 Restoring Items. Perform the following steps to restore an item that has been saved in the UII Registry.

NOTE

The name of part marking software on the desktop may differ.

a. Log onto part marking software.

Result: Job queue window will open.

b. Read and accept the DoD warning.

c. If current mark is not in job queue, click the CANCEL button.

d. To create a new data plate, click on PLATES menu then click NEW on the drop-down menu, or to open an existing template, click on the PLATES menu, then click OPEN to open the appropriate file.

e. From the first drop-down menu in the left hand column, under MANDATORY ZONES, select CAGE, as required.

f. From the second drop-down menu in the left hand column, under MANDATORY ZONES, select P/N, as required.

g. From the third drop-down menu in the left hand column, under MANDATORY ZONES, select S/N, as required.

NOTE

Always use ALL CAPS in data fields.

h. Enter Legacy data (CAGE, P/N, and S/N) as required in MANDATORY ZONES fields, in the right hand column.

i. Click the ? button to check registry in order to verify, whether or not the mark is unique.

j. Click the OK button and verify data.

Downloaded from http://www.everyspec.com

Result 1: NO MATCHING PLATES FOUND IN ANY OF THE LOCAL DATABASES pop up window will display, contact Industrial Engineer Technician/scheduler for verification of data.

Result 2: REMARK PLATE SELECTION window will display. Restore applicable new style 18S plate.

k. A pop up window will display, ARE YOU SURE YOU WISH TO RESTORE THE SELECTED PLATE?

l. Select YES to restore plate.

m. Verify data in PLATE SETUP window is correct. Make required changes as appropriate.

n. Once data has been verified, a green light will illuminate at the bottom of the screen.

o. Click the SAVE button.

Result: Plate name will be displayed as concatenated UII.

p. Click MARK button to access the PLUG-IN button.

q. Click the PLUG-IN button to arrange the data fields for 2-D data matrix mark, as required.

r. From the FILE drop-down menu, select UPDATE PROJECT, then from the FILE drop-down menu, select EXIT to accept.

s. For laser operation, perform steps (1) through (3) below. For dot peen operation, go to step ae.

(1) Place marking material in the laser cart.

(2) Turn on laser, if not already powered up.

(3) Ensure the laser is in the home position prior to initial use. If not in the home position, follow the proceeding steps (a) through (f).

(a) From the laser cart display, ensure SETUP is highlighted. Press the ENTER button.

(b) From the laser cart display, use the down arrow to highlight DIODE POINTER.

(c) From the laser cart display, use the wheel to toggle DIODE POINTER to YES. Press the ENTER button to accept.

(d) From the laser cart display, use the right arrow to highlight SERVICE. Press the ENTER button to accept.

(e) From the laser cart display, use arrow buttons to highlight MOVE X/Y. Press the ENTER button to accept.

NOTE

This will allow for manual adjustments to the laser for appropriate setup and position.

(f) Using the arrow buttons, move the laser X/Y-axis positions down and over to clear obstacles, and to within 1/8 in. from the top of the left hand corner of the item.

CAUTION

Cutting blade must be to the left of the marking area, as damage to the laser and material can occur if not in the appropriate position.

t. Once the laser is in the correct home position, press ENTER to accept.

u. Return to part marking software.

v. Click the MARK button to apply the 2-D data matrix mark to the item.

w. WAS IT A SUCCESSFUL MARK? pop up window will appear.

x. Return to cart. Use arrow keys on the cart display, and highlight JOBS, press ENTER to accept.

Result: Document1 will appear.

y. Press ENTER to accept.

Result: RUN will be highlighted within a menu of choices.

z. Press ENTER to accept.

Result: 2-D matrix will be created.

aa. When marking is complete, remove item from compartment.

ab. Return to part marking software.

Downloaded from http://www.everyspec.com

ac. Leaving all current windows open (including WAS IT A SUCCESSFUL MARK?), open UID CHECKER.

NOTE

Open windows may need to be minimized.

ad. Return to paragraph 5.6, 2-D Data Matrix Verification Process, and follow steps within for verification instructions.

ae. For dot peen operation, perform steps (1) through (19) below.

(1) Ensure fixtures and jigs are installed as required.

(2) Place item to be marked on the cart.

(3) From the PLUG IN window, position the X/Y axis to adjust the marking fields, as required.

NOTE

Set OBJECT PARAMETERS MARKING FORCE and Z GAP, in the PLUG IN window, based on operating instructions.

(4) Click the M icon on the top bar menu to go to MARK PROJECT screen to trace mark prior to part marking.

(5) In the pop-up window, select the desired zones to trace.

(6) Select TRACE CONTENTS ONLY from the drop-down menu in the TRACE BEHAVIOUR field.

(7) Click TRACE SELECT OBJECTS box to select.

Result: Stylus will trace the outline of the mark prior to marking.

(8) Visually inspect and confirm the traced marking location prior to marking the part.

(9) Click the CANCEL button once the marking location has been visually inspected.

(10) In the PLUG IN box, click the CROSS RULER icon on the top bar menu to begin the marking process.

(11) Click the red X at the top of the window to exit.

CAUTION

Proper personal protective equipment should be worn to prevent bodily injury.

(12) Push the green START button on the controller.

(13) Push the red STOP button on the controller if the mark is not properly lined up with the stylus.

(14) Return to paragraph 5.4.2, Initial Dot Peen Inspection, and follow steps within for inspection instructions.

(15) Once the mark has been visually inspected and meets marking criteria, press the green START button to proceed.

NOTE

- Refer to the software operation manual for appropriate verification process.
- The reader will illuminate green when the mark is validated.
- If the reader illuminates in red after several attempts and the mark does not meet validation criteria, refer to paragraph 5.5.1, Data Matrix Creation, for remarking instructions, after engineering approval.

(16) Use the hand held reader to validate the mark readability.

(17) Using the hand held reader, center the green illuminated line within the 2-D data matrix for proper validation.

(18) Connect to the applicable verification software to verify the mark.

(19) Perform verification of the 2-D data matrix mark by following the on-screen prompts.

5.7 LABEL APPLICATION.

a. Perform the steps in Chapter 3, paragraph 3.3, Surface Preparation, prior to label application.

b. Ensure area is dry prior to label application.

c. Clean hands to ensure they are free from any dirt, hydraulic fluids, grease, etc.

Downloaded from http://www.everyspec.com

d. Peel label from backing by bending and lifting at the corners and/or edges. Affix label and apply pressure by rubbing the label surface to thoroughly activate the adhesive and to work out any air bubbles between the tape and the surface. If possible, allow the label to set for a minimum of six hours prior to any use of the labeled item. Maximum adhesion occurs approximately 24 to 48 hours after applying the label.

Downloaded from http://www.everyspec.com