Downloaded from http://www.everyspec.com

AFWAL-TR-86-4120

AD-A176 232

EFFECT OF MANUFACTURING PROCESSES ON STRUCTURAL ALLOWABLES—PHASE II

BATTELLE COLUMBUS DIVISION
505 KING AVENUE
COLUMBUS, OHIO 43201-2693

NOVEMBER 1986

FINAL REPORT FOR PERIOD 29 JUNE 1985—29 JULY 1986

DTIC FILE COPY

Approved for public release; distribution unlimited

DTIC
S JAN 0 1987 D

MATERIALS LABORATORY
AIR FORCE WRIGHT AERONAUTICAL LABORATORIES
AIR FORCE SYSTEMS COMMAND
WRIGHT-PATTERSON AIR FORCE BASE, OHIO 45433-6533

87 1 29 027

Downloaded from http://www.everyspec.com

NOTICE

When government drawings, specifications, or other data are used for any purpose other than in connection with a definitely related government procurement operation, the United States government thereby incurs no responsibility nor any obligation whatsoever; and the fact that the government may have formulated, furnished, or in any way supplied the said drawings, specifications, or other data, is not to be regarded by implication or otherwise as in any manner licensing the holder or any other person or corporation, or conveying any rights or permission to manufacture, use, or sell any patented invention that may in any way be related thereto.

This report has been reviewed by the Office of Public Affairs (ASD/PA) and is releasable to the National Technical Information Service (NTIS). At NTIS, it will be available to the general public, including foreign nations.

This technical report has been reviewed and is approved for publication.

NEAL R. ONTKO
Project Engineer
Materials Engineering Branch

CLAYTON L. HARMSWORTH
Technical Manager for
Engineering & Design Data
Materials Engineering Branch

FOR THE COMMANDER

THEODORE J. REINHART, Chief
Materials Engineering Branch
Systems Support Division
Materials Laboratory

"If your address has changed, if you wish to be removed from our mailing list, or if the addressee is no longer employed by your organization, please notify MLSE, W-PAFB, OH 45433-6533 to help us maintain a current mailing list."

Copies of this report should not be returned unless return is required by security considerations, contractual obligations, or notice on a specific document.

Downloaded from http://www.everyspec.com

ERRATA FOR AFWAL-TR-86-4120,
DATED NOVEMBER 1986

Please make the following corrections:

Page Number	Correction
46	For 0.078 in. thickness, L direction, change shear ultimate strength value of 140.8 to 114.5 ksi and change average from 122.2 to 113.4 ksi. Add footnote indicator (5) to "Shear Ultimate Strength" in column heading.
47	For 0.093 in. thickness, L direction, change both shear ultimate strength values of 153.4 to 120.7 ksi and change average from 140.7 to 118.9 ksi. Add footnote indicator (5) to "Shear Ultimate Strength" in column heading.
48	For 0.125 in. thickness, LT direction, replace shear ultimate strength value of 130.6 with footnote indicator (4). Add footnote (4) to table as follows: "Excessive load inadvertently applied". Add footnote indicator (5) to "Shear Ultimate Strength". Add footnote (5) to table as follows: "Shear ultimate strength values not considered valid due to excessive deformation in test area".
49	For 1.98 mm thickness, L direction, change shear ultimate strength value of 970.8 to 781.9 GPa and change average from 842.3 to 779.4 GPa. Add footnote indicator (5) to "Shear Ultimate Strength" in column heading.
50	For 7.36 mm thickness, L direction, change both shear ultimate strength values of 1057.7 to 832.2 GPa and change average from 969.8 to 819.5 GPa. Add footnote indicator (5) to "Shear Ultimate Strength" in column heading.
51	For 3.175 mm thickness, LT direction, replace shear ultimate strength value of 900.3 GPa with footnote indicator (4) and change average to 784.3 GPa. Add footnote (4) to table as follows: "Excessive load inadvertently applied". Add footnote indicator (5) to "Shear Ultimate Strength". Add footnote (5) to table as follows: "Shear ultimate strength values not considered valid due to excessive deformation in test area".

Downloaded from http://www.everyspec.com

UNCLASSIFIED
SECURITY CLASSIFICATION OF THIS PAGE

REPORT DOCUMENTATION PAGE

1a. REPORT SECURITY CLASSIFICATION UNCLASSIFIED	1b. RESTRICTIVE MARKINGS
2a. SECURITY CLASSIFICATION AUTHORITY 2b. DECLASSIFICATION / DOWNGRADING SCHEDULE	3. DISTRIBUTION / AVAILABILITY OF REPORT Approved for public release; distribution unlimited
4. PERFORMING ORGANIZATION REPORT NUMBER(S)	5. MONITORING ORGANIZATION REPORT NUMBER(S) AFWAL-TR-86-4120
6a. NAME OF PERFORMING ORGANIZATION Battelle Columbus Division 6b. OFFICE SYMBOL (If applicable)	7a. NAME OF MONITORING ORGANIZATION AFWAL/MLSE Engineering and Design Data Materials Engineering Branch
6c. ADDRESS (City, State, and ZIP Code) 505 King Avenue Columbus, Ohio 43201-2693	7b. ADDRESS (City, State, and ZIP Code) Air Force Wright Aeronautical Laboratories Air Force Systems Command Wright-Patterson Air Force Base, Ohio 45433
8a. NAME OF FUNDING / SPONSORING ORGANIZATION Materials Laboratory 8b. OFFICE SYMBOL (If applicable) AFWAL/MLSE	9. PROCUREMENT INSTRUMENT IDENTIFICATION NUMBER F33615-84-C-5030
8c. ADDRESS (City, State, and ZIP Code) Air Force Wright Aeronautical Laboratories Air Force Systems Command Wright-Patterson Air Force Base, Ohio 45433	10. SOURCE OF FUNDING NUMBERS PROGRAM ELEMENT NO. 78011F; PROJECT NO. 2865; TASK NO. 00; WORK UNIT ACCESSION NO. 07

11. TITLE (Include Security Classification)
Effect of Manufacturing Processes on Structural Allowables - Phase II

12. PERSONAL AUTHOR(S)
Paul E. Ruff

13a. TYPE OF REPORT	13b. TIME COVERED	14. DATE OF REPORT (Year, Month, Day)	15. PAGE COUNT
Final	FROM June 1985 TO July 1986	November 1986	74

16. SUPPLEMENTARY NOTATION

17. COSATI CODES			18. SUBJECT TERMS (Continue on reverse if necessary and identify by block number)
FIELD	GROUP	SUB-GROUP	tensile yield strength; tensile ultimate strength; compressive yield strength; shear ultimate strength; bearing yield (OVER)
11	6		

19. ABSTRACT (Continue on reverse if necessary and identify by block number)

This report contains the results of tests to determine the effect of manufacturing processes on the mechanical properties of three aerospace materials: Inconel 718 solution treated and aged bar, Inconel 625 annealed bar, and Inconel 625 annealed sheet. Tensile, compression, shear, bearing, and fatigue (notched and unnotched for three stress ratios) properties were obtained. Keywords: Nickel alloy Inconel

20. DISTRIBUTION / AVAILABILITY OF ABSTRACT ☒ UNCLASSIFIED/UNLIMITED ☐ SAME AS RPT. ☐ DTIC USERS	21. ABSTRACT SECURITY CLASSIFICATION UNCLASSIFIED
22a. NAME OF RESPONSIBLE INDIVIDUAL Neal R. Ontko	22b. TELEPHONE (Include Area Code) 513-255-5063 22c. OFFICE SYMBOL AFWAL/MLSE

DD FORM 1473, 84 MAR — 83 APR edition may be used until exhausted. All other editions are obsolete.

SECURITY CLASSIFICATION OF THIS PAGE

Downloaded from http://www.everyspec.com

18. (CONTINUED)

strength; bearing ultimate strength; elongation; tensile modulus of elasticity; compressive modulus of elasticity; fatigue properties; Inconel 718 bar, Inconel 625 bar, and Inconel 625 sheet.

Inconel bars.
Inconel sheets.

Downloaded from http://www.everyspec.com

FOREWORD

This project was conducted by Battelle Columbus Division under Contract Number F33615-84-C-5030, Project Number 2865, over the period June 29, 1985, through July 29, 1986. Mr. Neal R. Ontko (MLSE), Engineering and Design Data, Materials Engineering Branch, was the project engineer for the Materials Laboratory, Air Force Wright Aeronautical Laboratories, Air Force Systems Command, Wright-Patterson Air Force Base, Ohio. This final report covering Phase II was submitted by the author, Mr. Paul E. Ruff, in July 1986.

The author wishes to express his appreciation to Mr. Dana Jones for his effort on this project.

DTIC
COPY
INSPECTED

Dist
A-1

Downloaded from http://www.everyspec.com

TABLE OF CONTENTS

	Page
SUMMARY	1
INTRODUCTION	1
OBJECTIVE	2
TECHNICAL APPROACH	2
TEST PROCEDURE	3
TEST PROGRAM	3
Inconel 718 Bar (Solution Treated and Aged)	4
Background	4
Material	4
Location of Test Specimens	4
Specimen Configuration	6
Test Results	6
Inconel 625 Bar (Annealed)	25
Background	25
Material	25
Location of Test Specimens	25
Specimen Configuration	27
Test Results	27
Inconel 625 Sheet (Annealed)	40
Background	40
Material	40
Location of Test Specimens	40
Specimen Configuration	40
Test Results	45

APPENDICES

	Page
APPENDIX A. TESTING PROCEDURES	57
APPENDIX B. SPECIMEN CONFIGURATIONS	59

Downloaded from http://www.everyspec.com

FIGURES

Figure		Page
1.	Plan view showing location of long transverse specimens for Inconel 625 and Inconel 718 bar	7
2.	Cross-sectional location of longitudinal tensile, compression, and shear specimens for all diameters of Inconel 625 and Inconel 718 bar	8
3.	Cross-sectional location of longitudinal bearing specimens for all diameters of Inconel 625 and Inconel 718 bar	8
4.	Location of short transverse tensile, compression, and shear specimens for Inconel 625 and Inconel 718 bar--2-inch diameter	9
5.	Location of short transverse tensile, compression, and shear specimens for Inconel 625 and Inconel 718 bar--2-1/4-inch diameter	10
6.	Location of short transverse tensile, compression, and shear specimens for Inconel 625 and Inconel 718 bar--2-1/2-, 2-3/4-, and 3-inch diameter	11
7.	Location of short transverse tensile, compression, and shear specimens for Inconel 625 and Inconel 718 bar--3-1/4-, 3-1/2-, 3-3/4-, and 4-inch diameter	12
8.	Specification identification code for Inconel 718 bar	13
9.	Typical tensile stress-strain curves for Inconel 718 STA bar	20
10.	Typical compressive stress-curves for Inconel 718 STA bar	20
11.	Unnotched axial-stress S/N curves for 3/4-inch-diameter Inconel 718 solution treated and aged bar--longitudinal direction	24
12.	Notched axial-stress S/N curves for 3/4-inch-diameter Inconel 718 solution treated and aged bar--longitudinal direction	24
13.	Specimen identification code for Inconel 625 bar	28
14.	Typical tensile stress-strain curves for annealed Inconel 625 bar	35
15.	Typical compressive stress-strain curves for annealed Inconel 625 bar	35
16.	Unnotched axial-stress S/N curves for 3/4-inch-diameter annealed Inconel 625 bar--longitudinal direction	39

Downloaded from http://www.everyspec.com

FIGURES (Continued)

Figure		Page
17.	Notched axial-stress S/N curves for 3/4-inch-diameter annealed 625 bar--longitudinal direction	39
18.	Location of test specimens for annealed Inconel 625 sheet--all thicknesses except 0.093 inch	42
19.	Location of test specimens for annealed Inconel 625 sheet--0.093-inch thick	43
20.	Specimen identification code for Inconel 625 sheet	44
21.	Typical tensile stress-strain curves for annealed Inconel 625 sheet	52
22.	Typical compressive stress-strain curves for annealed Inconel 625 sheet	52
23.	Unnotched axial-stress S/N curves for 0.093-inch-thick, annealed Inconel 625 sheet	55
24.	Notched axial-stress S/N curves for 0.093-inch-thick, annealed Inconel 625 sheet	55

Downloaded from http://www.everyspec.com

TABLES

Table		Page
1.	CHEMICAL COMPOSITION OF INCONEL 718 BAR	5
2.	MECHANICAL PROPERTIES OF INCONEL 718 STA BAR	14
2(a).	MECHANICAL PROPERTIES OF INCONEL 718 STA BAR	17
3.	UNNOTCHED FATIGUE DATA FOR INCONEL 718 STA BAR--LONGITUDINAL DIRECTION	22
4.	NOTCHED, K_t = 3, FATIGUE DATA FOR INCONEL 718 STA BAR--LONGITUDINAL DIRECTION	23
5.	CHEMICAL COMPOSITION OF INCONEL 625 BAR	26
6.	MECHANICAL PROPERTIES OF ANNEALED INCONEL 625 BAR	29
6(a).	MECHANICAL PROPERTIES OF ANNEALED INCONEL 625 BAR	32
7.	UNNOTCHED FATIGUE DATA FOR ANNEALED INCONEL 625 BAR--LONGITUDINAL DIRECTION	36
8.	NOTCHED, K_t = 3, FATIGUE DATA FOR ANNEALED INCONEL 625 BAR--LONGITUDINAL DIRECTION.....	37
9.	CHEMICAL COMPOSITION OF INCONEL 625 SHEET	41
10.	MECHANICAL PROPERTIES OF ANNEALED INCONEL 625 SHEET	46
10(a).	MECHANICAL PROPERTIES OF ANNEALED INCONEL 625 SHEET	49
11.	UNNOTCHED FATIGUE DATA FOR ANNEALED INCONEL 625 SHEET--LONG TRANSVERSE DIRECTION	53
12.	NOTCHED, K_t = 3, FATIGUE DATA FOR ANNEALED INCONEL 625 SHEET--LONG TRANSVERSE DIRECTION	54

Downloaded from http://www.everyspec.com

SUMMARY

To evaluate the effect of newly established manufacturing techniques and processes on the MIL-HDBK-5 design allowable properties of aerospace materials, various mechanical properties, including fatigue, were determined at room temperature for multiple lots of three products. The data which were obtained are suitable for the determination of statistically based design values or can be used to supplement existing data so that design values can be determined. (Statistical analysis of the data to determine design allowables was not performed in this test program.)

Specifically, the following tests were conducted in Phase II:

Inconel 718 (STA Bar). Tensile, compression, shear, and bearing tests in two grain directions were conducted on ten lots of solution treated and aged Inconel 718 bars, which varied in thickness from 2 through 4 inches in diameter. Unnotched and notched, $K_t = 3$, axial-stress fatigue tests were performed at three stress ratios, R = -0.5, R = 0.1, and R = 0.5, using longitudinal specimens from 3/4-inch-diameter bar. S/N curves were constructed.

Inconel 625 (Annealed) Bar. Tensile, compression, shear, and bearing tests in two grain directions were conducted on ten lots of annealed Inconel 625 bars, which varied in thickness from 2 through 4 inches in diameter. Unnotched and notched, $K_t = 3$, axial-stress fatigue tests were performed at three stress ratios, R = -0.5, R = 0.1, and R = 0.5, using longitudinal specimens from 3/4-inch-diameter bar. S/N curves were constructed.

Inconel 625 (Annealed) Sheet. Tensile, compression, shear, and bearing tests in two grain directions were conducted on ten lots of annealed Inconel 625 sheet, which varied in thickness from 0.050 through 0.250 inch. Unnotched and notched, $K_t = 3$, axial-stress fatigue tests were performed at three stress ratios, R = -0.5, R = 0.1, and R = 0.5, using long transverse specimens from 0.093-inch-thick sheet. S/N curves were constructed.

INTRODUCTION

One of the major problems in the utilization of new manufacturing techniques for metallic materials used in advanced aircraft is the lack of

Downloaded from http://www.everyspec.com

sufficient comparative mechanical property data to determine the effect of a new manufacturing technique or process on the design properties of the basic material. According to DoD and FAA regulations, a material cannot be used in a structural aircraft design unless the design allowable properties are available in MIL-HDBK-5 or a statistically significant quantity of data are available to provide acceptable documentation to support the values used in the design.

Consequently, test programs were needed to evaluate the effects of new manufacturing techniques or processes on the basic mechanical properties, such as tension, compression, shear, and bearing properties, as well as fatigue characteristics. These data, when suitably obtained, can be used by the MIL-HDBK-5 Program to determine statistically based design values for incorporation into MIL-HDBK-5. The availability of these data will reduce the time lag between the establishment of a new manufacturing process (or alloy) and its use in aerospace vehicles and components.

OBJECTIVE

The objective of this program was to evaluate the effect of newly established manufacturing techniques and processes on the MIL-HDBK-5 design allowable properties of structural materials used in aerospace applications.

TECHNICAL APPROACH

The technical approach was to fabricate (including heat treatment, when required) test specimens, to perform the mechanical property tests which are required for the development of design allowable properties, and to present the mechanical property data in a format suitable for use by the engineering community. The materials tested were:

Inconel 718 Bar (Solution Treated and Aged)
Inconel 625 Bar (Annealed)
Inconel 625 Sheet (Annealed)

Downloaded from http://www.everyspec.com

TEST PROCEDURE

Triplicate specimens, except for fatigue, were conducted for each mechanical property and grain direction. The test specimen location and configurations are described under the individual alloy in the Test Program section. All test specimens were fabricated by Metcut Research Associates, Inc., Cincinnati, Ohio. In general, all mechanical property tests were conducted in accord with ASTM standards. A detailed description of testing procedures is provided in Appendix A. All tests were conducted at room temperature.

TEST PROGRAM

A description of the test program and the data obtained for each material are presented in this section.

Downloaded from http://www.everyspec.com

Inconel 718 Bar (Solution Treated and Aged)

Background

Because of its many attractive characteristics, Inconel 718 is being used for applications other than for parts exposed to high temperatures. Therefore, data for mechanical properties other than those critical for high temperature performance are needed. Inconel 718 is currently contained in MIL-HDBK-5, but design values for properties other than tensile yield and ultimate strengths are missing. Consequently, a test program was needed to determine the mechanical properties of Inconel 718 bar in the solution treated and aged condition so that design values can be subsequently determined.

Material

Eleven lots of Inconel 718 bar were procured from Inco Alloys International (formerly Huntington Alloys) in the solution treated condition to AMS 5662. The eleven lots represented nine heats. The chemical compositions, as determined by Inco Alloys International, are shown in Table 1. Bars were obtained in the following sizes: 3/4, 2, 2-1/4, 2-1/2, 2-3/4, 3, 3-1/4, 3-1/2, 3-3/4, and 4 inches in diameter. Two heats of 2-inch-diameter bar were procured. Inconel 718 bar is not produced in rectangular shapes; consequently, round bars with sufficient diameter to accommodate bearing specimens in the longitudinal grain direction at the T/4 location were selected. For economy, 3/4-inch-diameter bar was obtained for fatigue tests.

Bars were supplied in the solution heat treated condition (1775-1825 F). After machining, test specimens were precipitation heat-treated in a vacuum furnace according to AMS 5662, as follows: heat to 1325 F $\pm$ 15 and hold for 8 hours, cool at 100 $\pm$ 15 F degrees per hour to 1150 $\pm$ 15 F, hold at 1150 $\pm$ 15 F for 8 hours, and cool to room temperature. This heat treatment is used primarily for parts requiring maximum resistance to creep and stress rupture. (Tensile properties after heat treatment conformed to AMS 5662.)

Location of Test Specimens

For mechanical property data to be usable for the determination of MIL-HDBK-5 design values, tensile, compression, shear, and bearing

TABLE 1. CHEMICAL COMPOSITION OF INCONEL 718 BAR

Heat Number	Element, percent														
	C	Mn	Fe	S	Si	Cu	Ni	Cr	Al	Ti	Co	Mo	Cb+Ta	P[a]	B[a]
VT03A1EY	0.01	0.06	18.44	0.002	0.05	0.04	53.55	17.93	0.63	0.96	0.02	3.00	5.31	0.005	0.003
HT2860EY	0.03	0.10	17.35	0.001	0.012	0.13	53.86	18.48	0.52	0.95	0.21	3.01	5.22	0.012	0.003
HT2877EY	0.02	0.07	17.00	0.002	0.08	0.04	54.30	18.48	0.59	0.95	0.13	3.02	5.31	0.007	0.003
HT3111EY	0.03	0.14	17.42	0.001	0.13	0.13	53.85	18.68	0.53	0.94	0.08	2.96	5.10	0.010	0.002
HT36KSEY	0.03	0.10	18.26	0.002	0.11	0.12	53.68	18.28	0.48	0.84	0.08	2.94	5.06	0.012	0.002
HT2859EY	0.03	0.10	17.80	0.001	0.14	0.15	53.73	18.39	0.52	0.94	0.12	2.97	5.09	0.012	0.002
HT3101EY	0.03	0.14	17.45	0.001	0.10	0.13	54.18	18.35	0.53	0.90	0.07	2.99	5.12	0.010	0.002
HT22K9EY	0.03	0.10	17.79	0.002	0.12	0.15	54.56	17.39	0.56	0.95	0.19	3.04	5.12	0.011	0.002
HT31K1EY	0.03	0.08	18.48	0.001	0.15	0.11	53.48	17.97	0.42	1.06	0.19	3.03	5.00	0.001	0.002

[a]Included in reported iron.

Note: Composition of all heats conformed to the requirements of AMS 5662.

Downloaded from http://www.everyspec.com

Downloaded from http://www.everyspec.com

specimens must be located within the cross section in accord with AMS 2371. Therefore, all specimens, except fatigue, were located with the axis of the specimen at the T/4 location. Since all bars were round, mechanical property tests were conducted on two grain directions, longitudinal and short transverse, except that bearing tests were performed only in the longitudinal direction, since the short transverse dimensions of most bars would not accommodate bearing specimens. Longitudinal fatigue specimens were located at the T/2 location in the 3/4-inch-diameter bar. The location of the test specimens is shown in Figures 1 through 7. Figure 8 shows the code system used to identify test specimens.

Specimen Configuration

The configurations of test specimens are shown in Appendix B. Subsize tensile specimens were employed for the short transverse grain direction.

Test Results

Tensile. The results of tensile tests are shown in Tables 2 and 2(a). In addition to tensile yield and ultimate strengths, elongation and modulus of elasticity values are indicated. Typical tensile stress-strain curves for each grain direction are presented in Figure 9. The shape parameter was determined in accord with Section 9.3.2 of MIL-HDBK-5D. The average tensile yield strengths and the average tensile moduli of elasticity determined in this test program were used with the shape parameter to construct typical stress-strain curves.

Compression. The results of compression tests are shown in Tables 2 and 2(a). Compressive modulus of elasticity values are listed in addition to the compressive yield strengths. Typical compressive stress-strain curves are presented in Figure 10 for each grain direction. The shape parameter was determined in accord with Section 9.3.2 of MIL-HDBK-5D. The average compressive yield strengths and average compressive moduli of elasticity determined in this test program were used with the shape parameter to construct typical stress-strain curves.

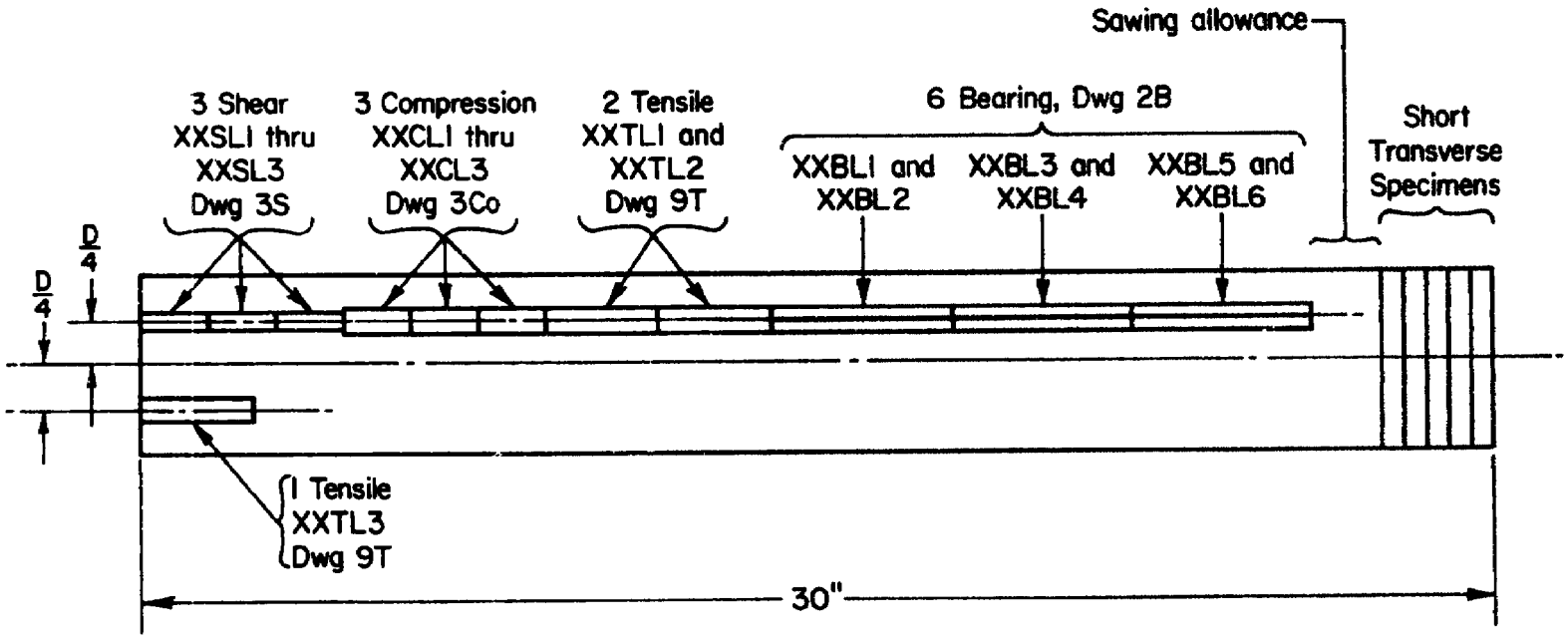

Figure 1. Plan view showing location of specimens for Inconel 625 and Inconel 718 bar.

Downloaded from http://www.everyspec.com

Downloaded from http://www.everyspec.com

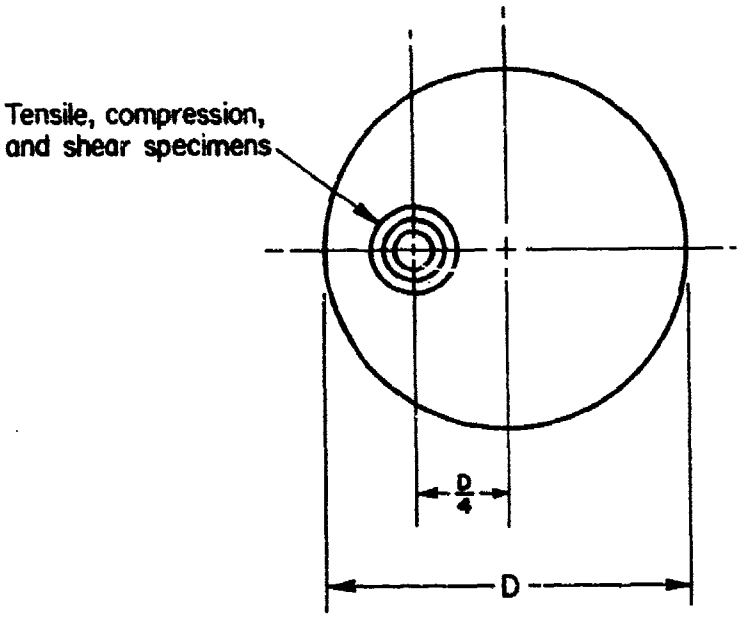

Figure 2. Cross-sectional location of longitudinal tensile, compression, and shear specimens for all diameters of Inconel 625 and Inconel 718 bar.

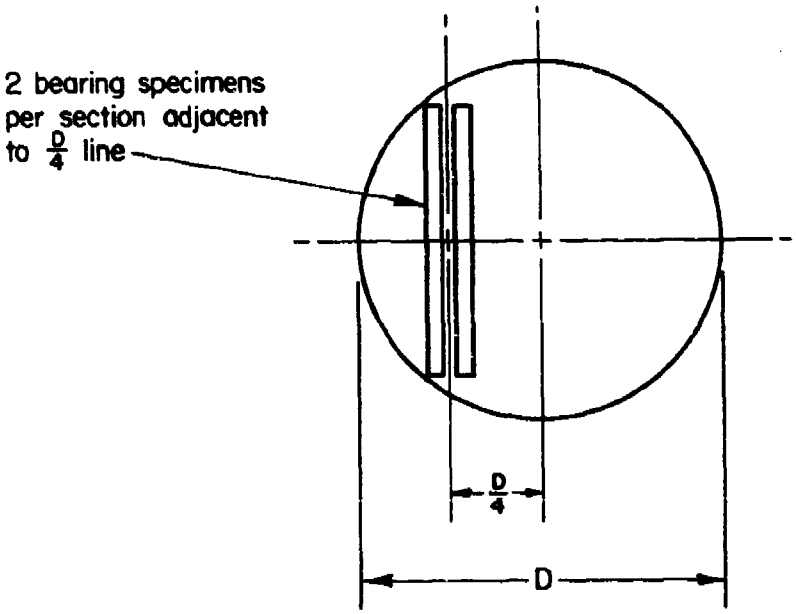

Figure 3. Cross-sectional location of longitudinal bearing specimens for all diameters of Inconel 625 and Inconel 718 bar.

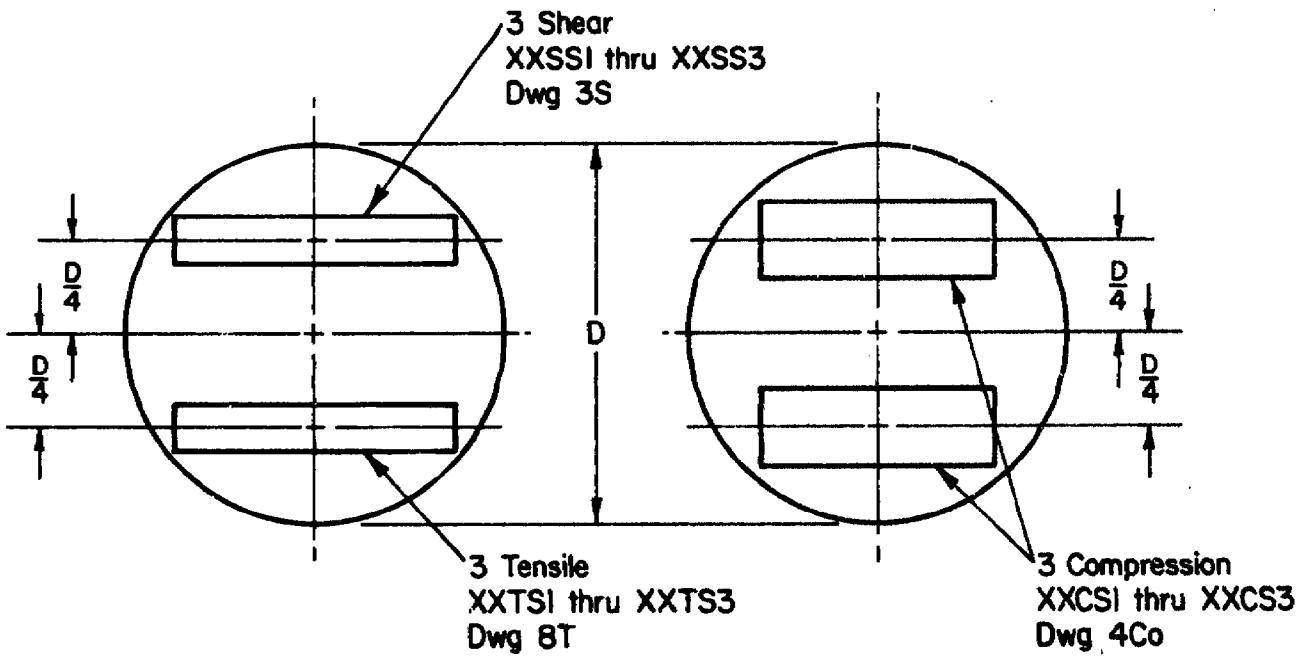

Figure 4. Location of short transverse tensile, compression, and shear specimens for Inconel 625 and Inconel 718 bar--2-inch diameter.

Downloaded from http://www.everyspec.com

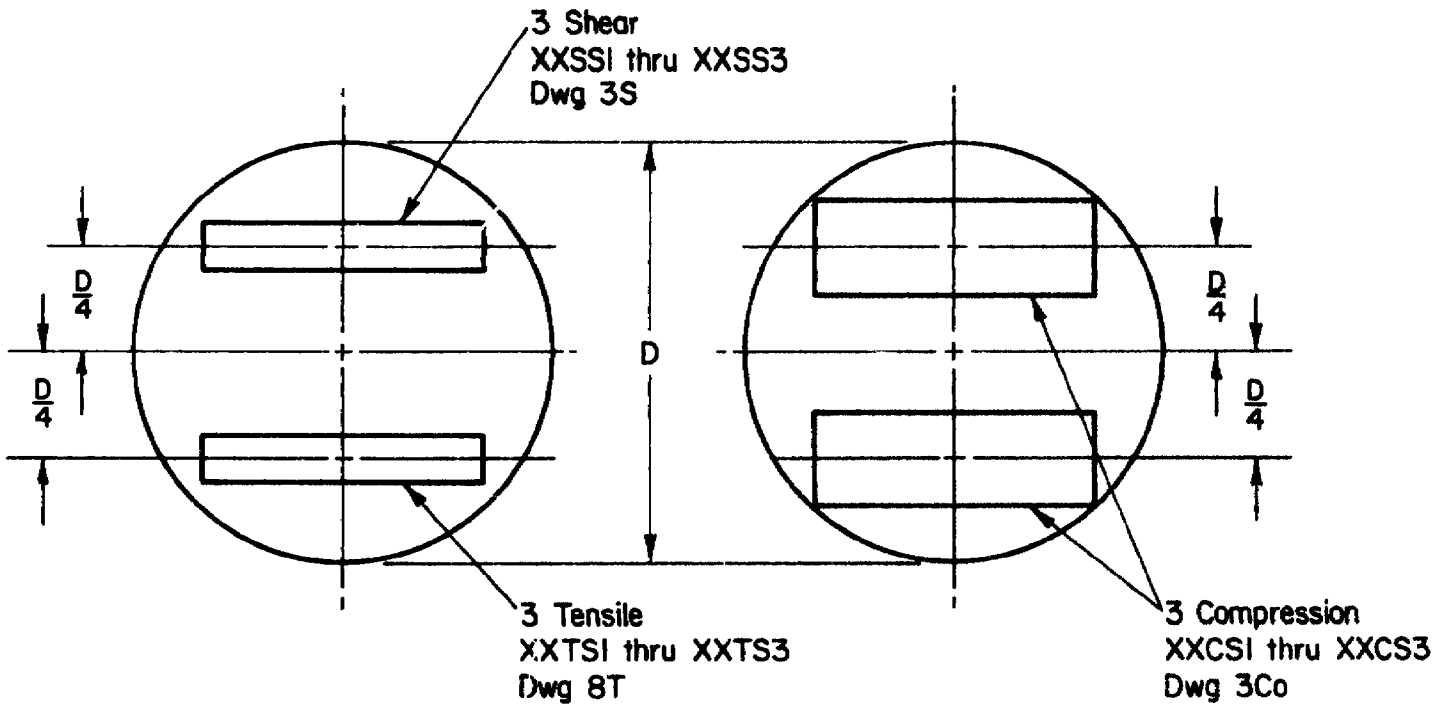

Figure 5. Location of short transverse tensile, compression, and shear specimens for Inconel 625 and Inconel 718 bar--2-1/4-inch diameter.

Downloaded from http://www.everyspec.com

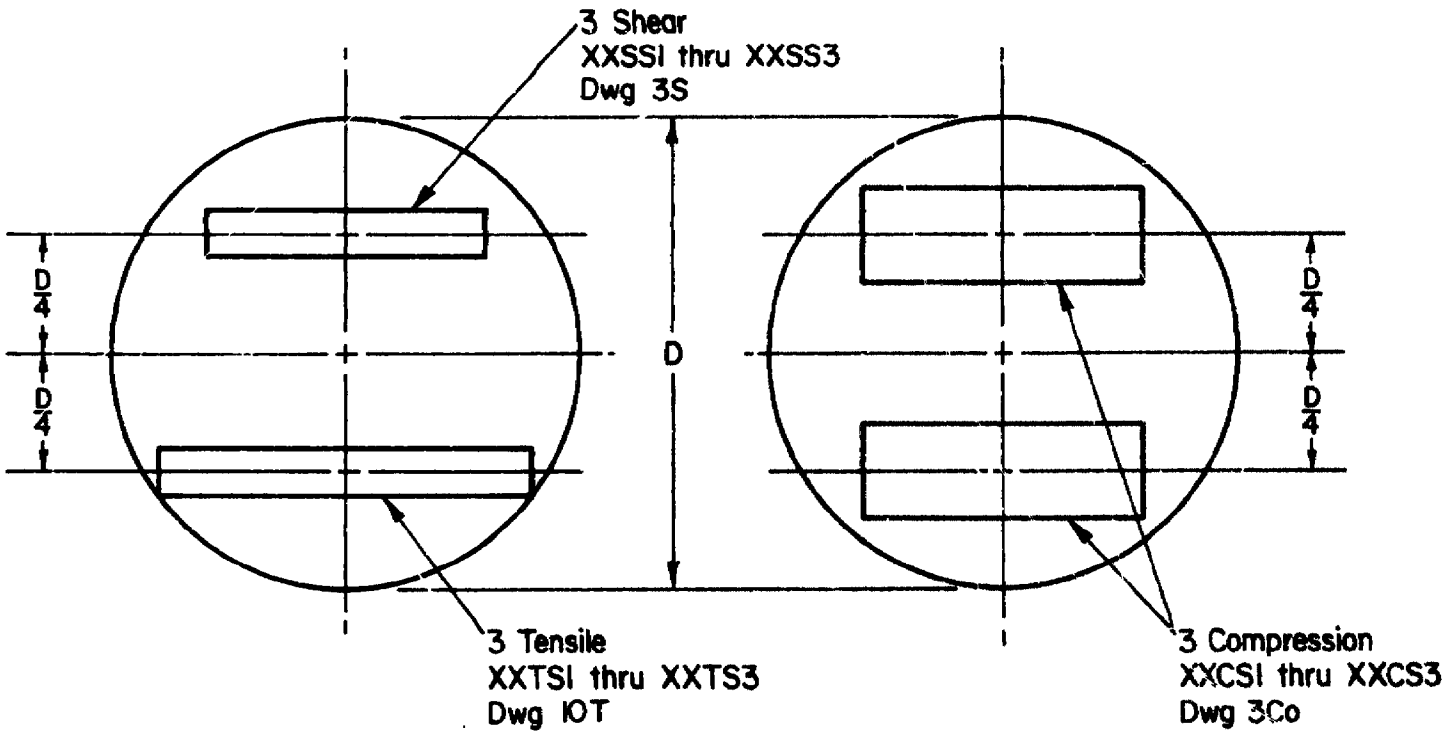

Figure 6. Location of short transverse tensile, compression, and shear specimens for Inconel 625 and Inconel 718 bar--2-1/2-, 2-3/4-, and 3-inch diameter.

Downloaded from http://www.everyspec.com

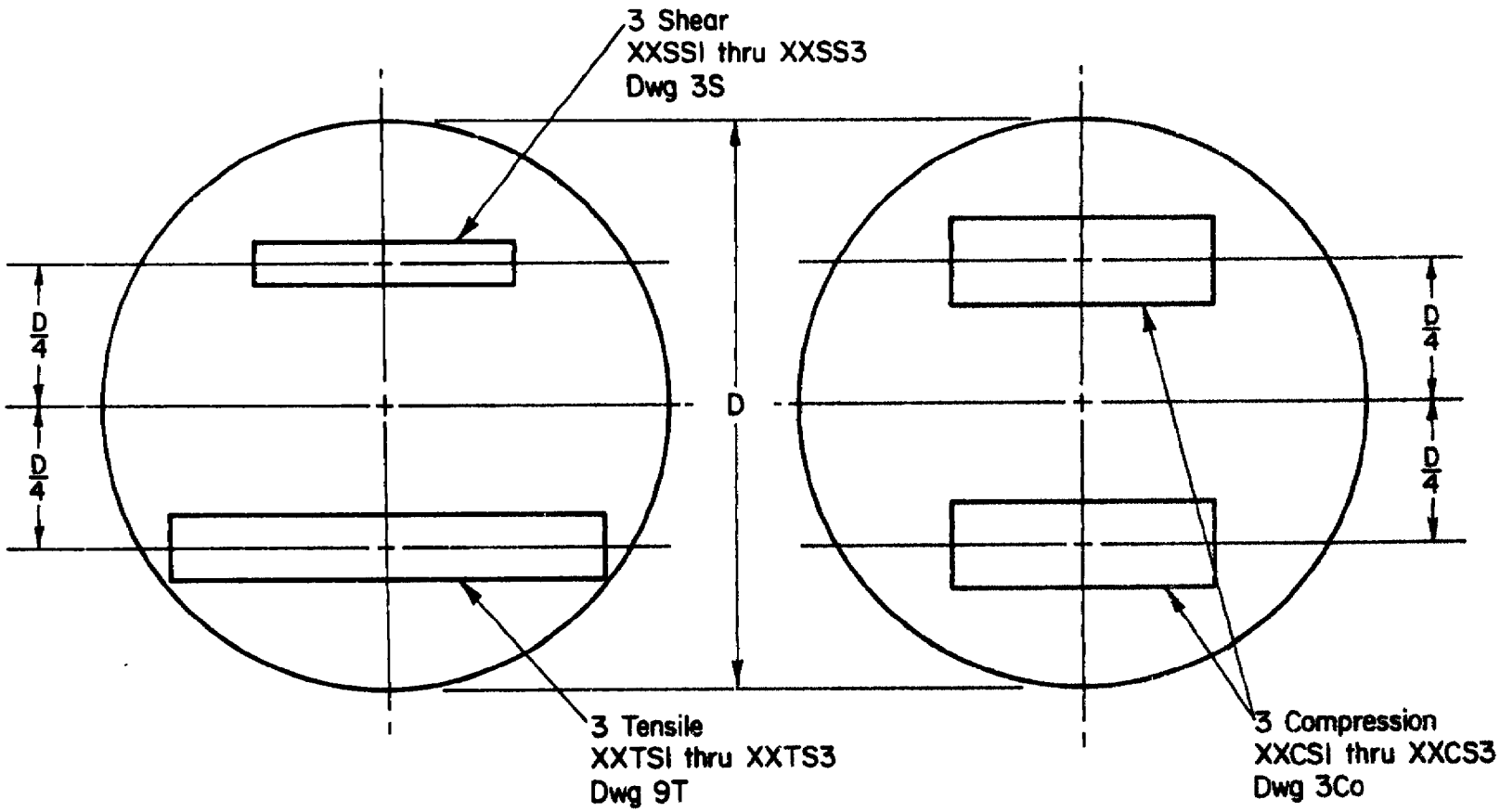

Figure 7. Location of short transverse tensile, compression, and shear specimens for Inconel 625 and Inconel 718 bar--3-1/4-, 3-1/2-, 3-3/4-, and 4-inch diameter.

Downloaded from http://www.everyspec.com

Downloaded from http://www.everyspec.com

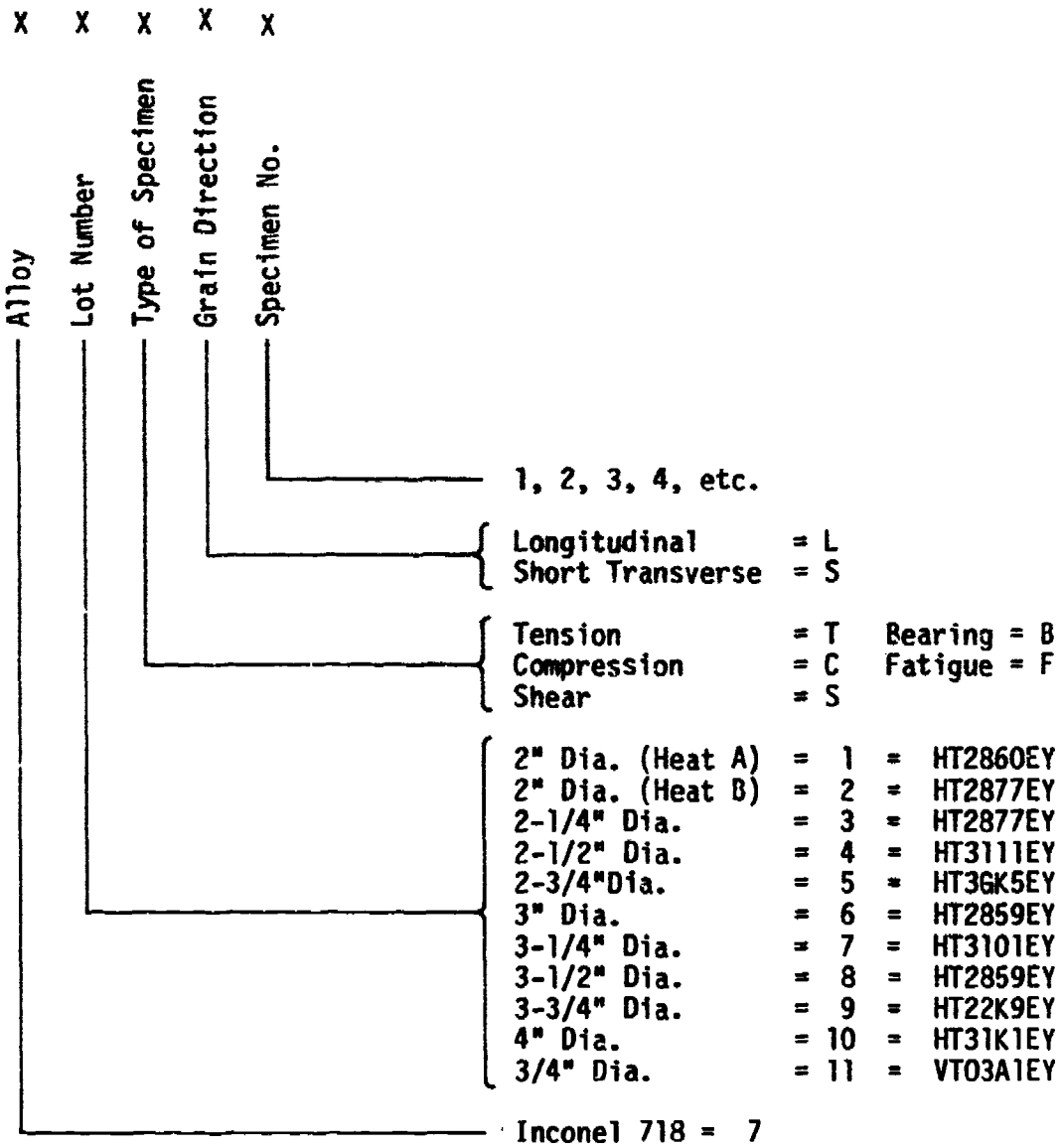

Figure 8. Specification identification code for Inconel 718 bar.

TABLE 2. MECHANICAL PROPERTIES OF INCONEL 718 STA BAR

Bar Diameter, inches	Grain Direction	Specimen No.	Tensile				Compressive		Shear	Bearing			
										e/D = 1.5		e/D = 2.0 (1)	
			Ultimate Strength, ksi	Yield Strength, ksi	Elongation, percent	Modulus, 10^3 ksi	Yield Strength, ksi	Modulus, 10^3 ksi	Ultimate Strength, ksi	Ultimate Strength, ksi	Yield Strength, ksi	Ultimate Strength, ksi	Yield Strength, ksi
2 (Heat A)	L	1	212.0	182.1	22.0	27.7	187.3	30.1	136.3	350.3	263.5	438.2	307.1
		2	212.7	181.3	22.0	34.2	191.0	31.0	136.2	346.1	263.3	442.2	310.1
		3	209.0	181.7	22.0	31.0	190.0	31.1	133.7	350.3	265.3	442.5	306.1
		Avg.	211.2	181.7	22.0	31.0	189.4	30.7	135.4	348.9	264.0	441.0	307.7
2 (Heat A)	ST	1	203.1	176.0	21.5	30.5	189.1	30.1	136.0				
		2	196.7	166.9	22.0	28.0	188.9	29.9	135.8				
		3	202.3	175.0	22.0	28.6	189.1	30.7	136.9				
		Avg.	200.7	172.6	21.8	29.0	189.0	30.2	136.2				
2 (Heat B)	L	1	204.6	172.9	24.5	29.0	180.6	31.3	135.4	348.9	258.7	440.9	307.1
		2	204.7	173.2	24.0	27.9	178.5	31.5	134.7	345.8	256.9	444.0	300.9
		3	204.1	173.4	24.5	30.3	177.6	31.0	134.3	344.2	258.4	440.8	295.5
		Avg.	204.5	173.2	24.3	29.1	178.9	31.3	134.8	346.3	258.0	441.9	301.1
2 (Heat B)	ST	1	197.4	169.7	24.0	30.1	182.4	28.9	135.0				
		2	199.9	169.5	24.0	26.6	184.0	30.2	134.7				
		3	202.0	174.9	20.0	27.7	182.4	30.0	135.4				
		Avg.	199.8	171.4	22.7	28.1	182.9	29.7	135.0				
2-1/4	L	1	210.8	181.3	22.6	30.4	187.5	31.4	137.1	351.3	262.2	451.2	304.3
		2	211.0	180.0	21.5	29.4	190.7	31.0	136.4	350.0	266.7	444.7	309.2
		3	210.4	182.7	22.0	28.3	189.0	30.6	135.6	351.8	260.1	445.7	303.9
		Avg.	210.7	181.3	22.0	29.4	189.1	31.0	136.4	351.0	263.0	447.2	305.8
2-1/4	ST	1	204.1	175.5	24.0	23.1	187.7	30.7	135.8				
		2	204.5	176.4	22.0	22.6	186.6	31.6	137.3				
		3	205.3	177.0	24.0	23.0	186.7	30.7	137.8				
		Avg.	204.6	176.3	23.3	22.9	187.0	31.0	137.0				
2-1/2	L	1	211.5	176.6	22.5	28.7	186.7	30.2	137.6	351.0	268.5	448.1	309.8
		2	210.8	175.7	22.0	27.6	187.2	29.3	138.1	348.2	262.8	444.2	306.4
		3	211.7	179.4	21.6	30.2	184.2	29.7	136.9	352.0	263.1	446.5	314.7
		Avg.	211.3	177.2	22.0	28.8	186.0	29.7	137.5	350.4	264.8	446.3	310.3

Downloaded from http://www.everyspec.com

TABLE 2. (Continued)

Bar Diameter, inches	Grain Direction	Specimen No.	Tensile				Compressive		Shear	Bearing			
										e/D = 1.5		e/D = 2.0 (1)	
			Ultimate Strength, ksi	Yield Strength, ksi	Elongation, percent	Modulus, 10^3 ksi	Yield Strength, ksi	Modulus, 10^3 ksi	Ultimate Strength, ksi	Ultimate Strength, ksi	Yield Strength, ksi	Ultimate Strength, ksi	Yield Strength, ksi
2-1/2	ST	1	211.7	180.8	22.0	27.3	184.7	30.8	137.8				
		2	211.1	179.8	22.0	27.8	186.0	31.0	137.1				
		3	212.4	180.1	24.0	27.9	185.6	31.8	138.6				
		Avg.	211.7	180.2	22.7	27.7	185.4	31.2	137.8				
2-3/4	L	1	192.8	164.1	24.6	29.1	180.7	30.2	130.4	327.4	238.8	420.2	286.8
		2	191.3	159.6	25.5	29.2	180.4	31.2	130.8	325.5	232.4	425.4	285.2
		3	192.6	163.2	25.0	29.8	180.6	30.7	130.9	330.8	239.3	422.3	270.2
		Avg.	192.2	162.3	25.0	29.4	180.6	30.7	130.7	327.9	236.8	422.6	280.8
2-3/4	ST	1	190.8	161.5	26.0	27.5	171.3	31.4	130.3				
		2	191.7	160.1	24.0	30.8	169.7	31.6	131.1				
		3	191.6	162.1	26.0	30.2	171.4	31.2	130.2				
		Avg.	191.4	161.2	25.3	29.5	170.8	31.4	130.5				
3	L	1	198.4	164.1	25.6	28.8	174.2	30.8	133.6	337.8	241.2	431.6	284.3
		2	197.3	165.6	25.0	28.2	176.3	31.8	133.7	338.1	245.5	439.2	298.2
		3	199.1	166.1	24.0	28.7	174.9	31.4	133.3	338.4	248.5	426.1	277.4
		Avg.	198.3	165.3	24.9	28.6	175.1	31.3	133.5	338.1	245.1	432.3	286.6
3	ST	1	197.6	168.7	26.0	26.2	181.3	30.9	132.9				
		2	197.9	170.6	26.0	28.2	180.4	31.6	131.3				
		3	198.0	170.7	24.0	28.6	178.7	31.6	133.8				
		Avg.	197.8	170.0	25.3	27.7	180.1	31.4	132.7				
3-1/4	L	1	209.3	176.0	22.5	27.8	183.1	30.8	136.0	348.0	254.2	446.7	297.4
		2	208.4	176.1	21.5	29.5	184.4	31.4	135.7	346.8	253.4	442.6	304.5
		3	209.0	176.2	22.0	31.5	183.6	31.9	136.4	348.5	258.6	442.7	301.6
		Avg.	208.9	176.1	22.0	29.6	183.7	31.4	136.0	347.8	255.4	444.0	301.2
3-1/4	ST	1	205.7	173.4	20.0	28.9	182.4	31.1	136.3				
		2	206.5	172.4	21.0	27.9	182.3	31.4	136.4				
		3	206.5	172.8	20.0	28.6	182.2	31.2	137.6				
		Avg.	206.2	172.9	20.3	28.5	182.3	31.2	136.8				

Downloaded from http://www.everyspec.com

TABLE 2. (Continued)

Bar Diameter, inches	Grain Direction	Specimen No.	Tensile				Compressive		Shear	Bearing (1)			
										e/D = 1.5		e/D = 2.0	
			Ultimate Strength, ksi	Yield Strength, ksi	Elongation, percent	Modulus, 10^3 ksi	Yield Strength, ksi	Modulus, 10^3 ksi	Ultimate Strength, ksi	Ultimate Strength, ksi	Yield Strength, ksi	Ultimate Strength, ksi	Yield Strength, ksi
3-1/2	L	1	199.3	171.9	23.6	28.8	178.6	30.6	133.5	337.3	243.9	422.1	296.1
		2	199.3	173.0	24.5	27.7	181.1	31.8	134.3	338.2	249.1	439.0	302.4
		3	198.9	170.6	24.5	29.3	180.8	31.7	133.8	338.4	246.8	438.0	288.8
		Avg.	199.2	171.8	24.2	28.6	180.2	31.4	133.9	338.0	246.6	433.0	295.8
3-1/2	ST	1	196.4	168.7	21.0	29.6	181.1	30.7	133.4				
		2	196.0	168.0	22.0	26.2	180.3	30.9	133.5				
		3	196.8	169.3	21.5	31.0	177.6	31.0	133.1				
		Avg.	196.4	168.7	21.5	28.9	179.7	30.9	133.3				
3-3/4	L	1	190.2	161.0	26.6	30.4	168.5	30.9	129.6	328.7	235.9	424.9	284.4
		2	190.5	162.6	25.0	31.6	167.4	31.3	130.5	329.3	240.6	418.1	286.9
		3	191.8	163.7	26.6	29.4	169.4	31.5	130.1	329.9	235.1	426.3	278.6
		Avg.	190.8	162.4	26.1	30.5	168.4	31.2	130.1	329.3	237.2	423.1	283.3
3-3/4	ST	1	187.3	155.1	24.0	27.9	169.8	31.1	130.4				
		2	187.6	156.4	24.0	31.0	170.2	32.1	129.6				
		3	185.1	156.3	25.6	29.2	168.4	32.0	129.6				
		Avg.	186.7	155.9	24.5	29.4	169.5	31.7	129.9				
4	L	1	192.6	165.8	22.5	27.2	173.8	30.9	131.1	328.3	237.7	425.5	287.2
		2	192.2	167.8	21.5	30.3	174.9	31.1	132.7	329.1	236.9	421.4	285.7
			190.9	164.8	22.0	27.5	173.8	31.8	132.8	321.3	226.6	429.1	299.0
		Avg.	191.9	166.1	22.0	28.3	174.2	31.3	132.2	326.3	233.7	425.3	290.7
4	ST	1	190.4	160.4	22.0	26.9	172.3	30.7	132.3				
		2	190.7	164.9	22.0	29.7	173.3	31.4	130.7				
		3	188.6	163.1	21.0	27.0	174.4	31.7	130.2				
		Avg.	189.9	162.8	21.7	27.9	173.3	31.3	131.1				
3/4	L	1	204.0	177.7	24.0	28.8							
		2	204.7	177.6	24.5	28.2							
		Avg.	204.4	177.7	24.3	28.5							

(1) Specimen numbers for e/D = 2.0 were 4 through 6.

Downloaded from http://www.everyspec.com

TABLE 2(a). MECHANICAL PROPERTIES OF INCONEL 718 STA BAR

Bar Diameter, mm	Grain Direction	Specimen No.	Tensile				Compressive		Shear	Bearing (1)			
										e/D = 1.5		e/D = 2.0	
			Ultimate Strength, MPa	Yield Strength, MPa	Elongation, percent	Modulus, GPa	Yield Strength, MPa	Modulus, MPa	Ultimate Strength, GPa	Ultimate Strength, MPa	Yield Strength, MPa	Ultimate Strength, MPa	Yield Strength, MPa
50.8 (Heat A)	L	1	1461.7	1255.6	22.0	191.0	1291.4	207.5	939.8	2415.2	1817.0	3021.6	2117.3
		2	1466.8	1250.1	22.0	235.8	1316.9	213.7	939.1	2386.1	1815.4	3048.8	2137.9
		3	1440.9	1252.8	22.0	213.7	1310.1	214.4	921.9	2415.0	1829.1	3050.8	2110.4
		Avg.	1456.5	1252.8	22.0	213.5	1306.1	211.9	933.6	2405.4	1820.5	3040.4	2121.9
50.8 (Heat A)	ST	1	1400.4	1213.5	21.5	210.3	1303.8	207.5	937.7				
		2	1356.2	1150.8	22.0	193.1	1302.5	206.2	936.3				
		3	1394.9	1206.6	22.0	197.2	1303.8	211.7	943.9				
		Avg.	1383.8	1190.3	21.8	200.2	1303.4	208.5	939.3				
50.8 (Heat B)	L	1	1410.7	1192.1	24.5	200.0	1245.2	215.8	933.6	2405.8	1783.7	3040.0	2117.3
		2	1411.4	1194.2	24.0	192.4	1230.8	217.2	928.8	2384.4	1771.3	3061.4	2074.7
		3	1407.3	1195.6	24.5	208.9	1224.6	213.7	926.0	2373.3	1781.5	3039.3	2037.2
		Avg.	1409.8	1194.0	24.3	200.4	1233.5	215.6	929.4	2387.8	1778.8	3046.9	2076.4
50.8 (Heat B)	ST	1	1361.1	1170.1	24.0	207.5	1257.6	199.3	930.8				
		2	1378.3	1168.7	24.0	183.4	1268.7	208.2	928.8				
		3	1392.8	1205.9	20.0	191.0	1257.6	206.9	933.6				
		Avg.	1377.4	1181.6	22.7	194.0	1261.3	204.8	931.1				
57.2	L	1	1453.5	1250.1	22.6	209.6	1292.8	216.5	945.3	2422.2	1807.5	3110.9	2098.1
		2	1454.8	1241.1	21.5	202.7	1314.9	213.7	940.5	2413.1	1838.7	3066.0	2131.9
		3	1450.7	1259.7	22.0	195.1	1303.2	211.0	935.0	2425.6	1793.3	3073.4	2095.2
		Avg.	1453.0	1250.3	22.0	202.5	1303.6	213.7	940.2	2420.3	1813.2	3083.4	2108.4
57.2	ST	1	1407.3	1210.1	24.0	159.3	1294.2	211.7	936.3				
		2	1410.0	1216.3	22.0	155.8	1286.6	217.9	946.7				
		3	1415.5	1220.4	24.0	158.6	1287.3	211.7	950.1				
		Avg.	1410.9	1215.6	23.3	157.9	1289.4	213.7	944.4				
63.5	L	1	1458.3	1217.7	22.5	197.9	1287.3	208.2	948.8	2420.4	1851.6	3089.5	2136.4
		2	1453.5	1211.5	22.0	190.3	1290.7	202.0	952.2	2401.2	1811.7	3062.9	2112.5
		3	1459.7	1237.0	21.6	208.2	1270.1	204.8	943.9	2427.3	1814.2	3078.8	2169.7
		Avg.	1457.1	1222.0	22.0	198.8	1282.7	205.0	948.3	2416.3	1825.8	3077.1	2139.5

Downloaded from http://www.everyspec.com

TABLE 2(a). (Continued)

Bar Diameter, mm	Grain Direction	Specimen No.	Tensile				Compressive			Bearing			
										e/D = 1.5		e/D = 2.0 (1)	
			Ultimate Strength, MPa	Yield Strength, MPa	Elongation, percent	Modulus, GPa	Yield Strength, MPa	Modulus, MPa	Strength, GPa	Ultimate Strength, MPa	Yield Strength, MPa	Ultimate Strength, MPa	Yield Strength, MPa
63.5	ST	1	1459.7	1246.6	22.0	188.2	1273.5	212.4	950.1				
		2	1455.5	1239.7	22.0	191.7	1282.5	213.7	945.3				
		3	1464.5	1241.8	24.0	192.4	1279.7	219.3	955.6				
		Avg.	1459.9	1242.7	22.7	190.8	1278.6	215.1	950.4				
69.8	L	1	1329.4	1131.5	24.6	200.6	1245.9	208.2	899.1	2257.4	1646.2	2897.5	1977.8
		2	1319.0	1100.4	25.5	201.3	1243.9	215.1	901.9	2244.5	1602.6	2933.3	1966.4
		3	1328.0	1125.3	25.0	205.5	1245.2	211.7	902.6	2280.9	1650.1	2911.6	1863.3
		Avg.	1325.4	1119.1	25.0	202.5	1245.0	211.7	901.2	2260.9	1633.0	2914.1	1935.8
69.8	ST	1	1315.6	1113.5	26.0	189.6	1181.1	216.5	898.4				
		2	1321.8	1103.9	24.0	212.4	1170.1	217.9	903.9				
		3	1321.1	1117.7	26.0	208.2	1181.8	215.1	897.7				
		Avg.	1319.5	1111.7	25.3	203.4	1177.7	216.5	900.0				
76.2	L	1	1368.0	1131.5	25.6	198.6	1201.1	212.4	921.2	2329.4	1662.9	2976.2	1960.2
		2	1360.4	1141.8	25.0	194.4	1215.6	219.3	921.9	2331.0	1693.0	3028.3	2056.2
		3	1372.8	1145.3	24.0	197.9	1205.9	216.5	919.1	2332.9	1713.5	2938.0	1912.3
		Avg.	1367.1	1139.5	24.9	197.0	1207.5	216.0	920.7	2331.1	1689.8	2980.8	1976.2
76.2	ST	1	1362.5	1163.2	26.0	180.6	1250.1	213.1	916.3				
		2	1364.5	1176.3	26.0	194.4	1243.9	217.9	905.3				
		3	1365.2	1177.0	24.0	197.2	1232.1	217.9	922.6				
		Avg.	1364.1	1172.2	25.3	190.8	1242.0	216.3	914.7				
82.6	L	1	1443.1	1213.5	22.5	191.7	1262.5	212.4	937.7	2399.1	1752.9	3080.3	2050.8
		2	1436.9	1214.2	21.5	203.4	1271.4	216.5	935.7	2391.3	1747.5	3052.0	2099.5
		3	1441.1	1214.9	22.0	217.2	1265.9	220.0	940.5	2403.1	1782.9	3052.8	2079.5
		Avg.	1440.4	1214.2	22.0	204.1	1266.6	216.3	937.9	2397.9	1761.1	3061.7	2076.6
82.6	ST	1	1418.3	1195.6	20.0	199.3	1257.6	214.4	939.8				
		2	1423.8	1188.7	21.0	192.4	1257.0	216.5	940.5				
		3	1423.8	1191.5	20.0	197.2	1256.3	215.1	948.8				
		Avg.	1422.0	1191.9	20.3	196.3	1257.0	215.4	943.0				

Downloaded from http://www.everyspec.com

TABLE 2(a). (Continued)

Bar Diameter, mm	Grain Direction	Specimen No.	Tensile				Compressive			Bearing			
										e/D = 1.5		e/D = 2.0 (1)	
			Ultimate Strength, MPa	Yield Strength, MPa	Elongation, percent	Modulus, GPa	Yield Strength, MPa	Modulus, MPa	Strength, GPa	Ultimate Strength, MPa	Yield Strength, MPa	Ultimate Strength, MPa	Yield Strength, MPa
88.9	L	1	1374.2	1185.3	23.6	198.6	1231.4	211.0	920.5	2325.8	1681.9	2910.3	2041.5
		2	1374.2	1192.8	24.5	191.0	1248.7	219.3	926.0	2332.1	1717.8	3027.2	2085.2
		3	1371.4	1176.3	24.5	202.0	1246.6	218.6	922.6	2333.3	1701.6	3019.8	1991.3
		Avg.	1373.3	1184.8	24.2	197.2	1242.2	216.3	923.0	2330.4	1700.4	2985.8	2039.3
88.9	ST	1	1354.2	1163.2	21.0	204.1	1248.7	211.7	919.8				
		2	1351.4	1158.4	22.0	180.6	1243.2	213.1	920.5				
		3	1356.9	1167.3	21.5	213.7	1224.6	213.7	917.7				
		Avg.	1354.2	1163.0	21.5	199.5	1238.8	212.8	919.3				
95.2	L	1	1311.4	1110.1	26.6	209.6	1161.8	213.1	893.6	2266.3	1626.5	2929.4	1960.9
		2	1313.5	1121.1	25.0	217.9	1154.2	215.8	899.8	2270.9	1659.0	2882.9	1978.1
		3	1322.5	1128.7	26.6	202.7	1168.0	217.2	897.0	2274.3	1620.8	2939.4	1921.1
		Avg.	1315.8	1120.0	26.1	210.1	1161.3	215.4	896.8	2270.5	1635.5	2917.2	1953.4
95.2	ST	1	1291.4	1069.4	24.0	192.4	1170.8	214.4	899.1				
		2	1293.5	1078.4	24.0	213.7	1173.5	221.3	893.6				
		3	1276.3	1077.7	25.6	201.3	1161.1	220.6	893.6				
		Avg.	1287.1	1075.2	24.5	202.5	1168.5	218.8	895.4				
101.6	L	1	1328.0	1143.2	22.5	187.5	1198.4	213.1	903.9	2263.9	1639.1	2933.7	1980.3
		2	1325.2	1157.0	21.5	208.9	1205.9	214.4	915.0	2269.5	1633.7	2905.3	1970.0
		3	1316.3	1136.3	22.0	189.6	1198.4	219.3	915.7	2215.5	1562.3	2959.0	2061.9
		Avg.	1323.2	1145.5	22.0	195.4	1200.9	215.6	911.5	2249.6	1611.7	2932.6	2004.1
101.6	ST	1	1312.8	1106.0	22.0	185.5	1188.0	211.7	912.2				
		2	1314.9	1137.0	22.0	204.8	1194.9	216.5	901.2				
		3	1300.4	1124.6	21.0	186.2	1202.5	218.6	897.7				
		Avg.	1309.4	1122.5	21.7	192.1	1195.1	215.6	903.7				
19.0	L	1	1406.6	1225.2	24.0	198.6							
		2	1411.4	1224.6	24.5	194.4							
		Avg.	1409.0	1224.9	24.3	196.5							

(1) Specimen numbers for e/D = 2.0 were 4 through 6.

Downloaded from http://www.everyspec.com

Downloaded from http://www.everyspec.com

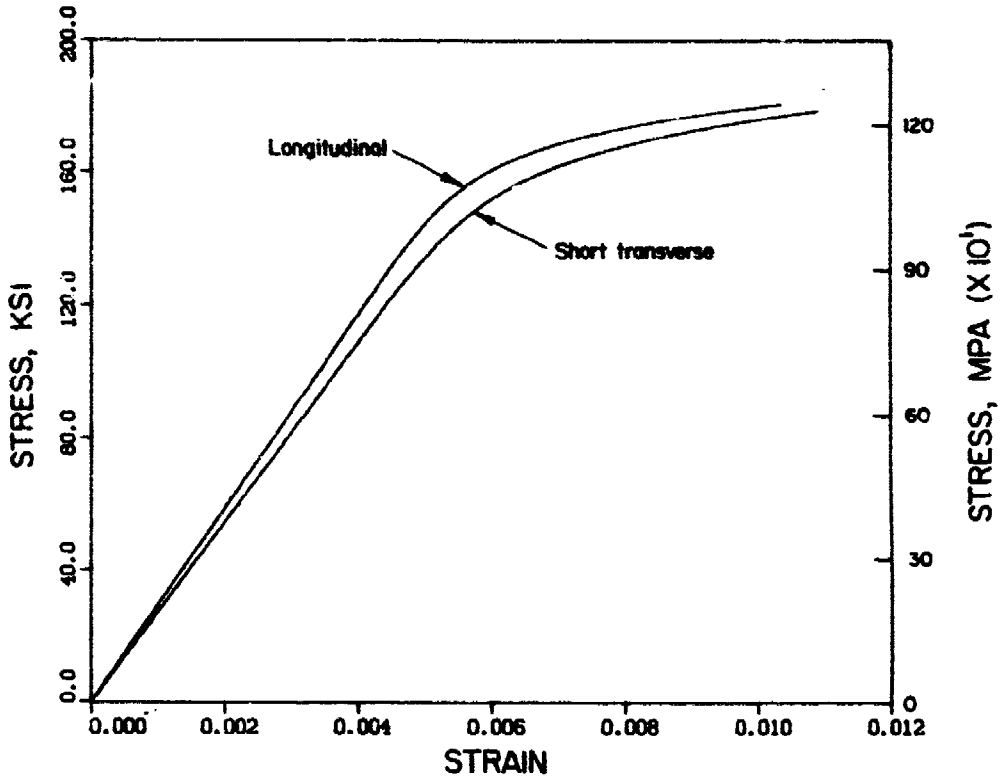

Figure 9. Typical tensile stress-strain curves for Inconel 718 STA bar.

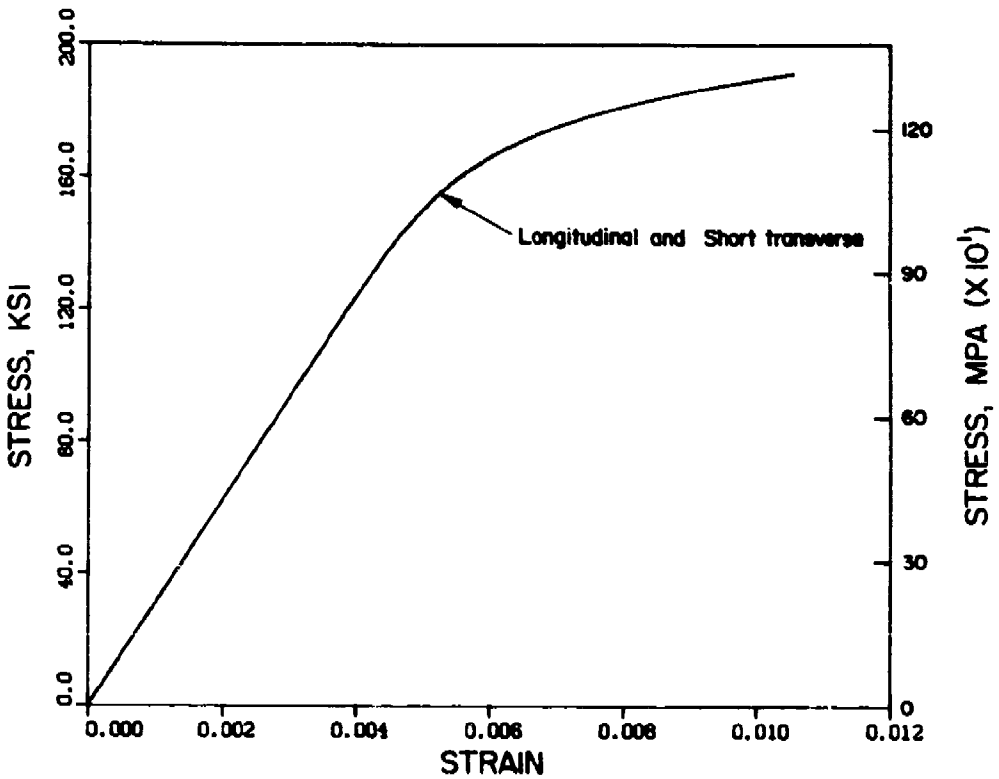

Figure 10. Typical compressive stress-strain curves for Inconel 718 STA bar.

Downloaded from http://www.everyspec.com

Shear. The results of shear tests are shown in Tables 2 and 2(a). Values for shear ultimate strength are listed.

Bearing. The results of bearing tests are shown in Tables 2 and 2(a). Values for longitudinal bearing yield and ultimate strengths for e/D = 1.5 and e/D = 2.0 are listed. Bearing tests were not conducted in the short transverse direction.

Fatigue. The results of axial-stress fatigue tests are shown in Tables 3 and 4. Fatigue tests were conducted in the longitudinal grain direction utilizing unnotched and notched, K_t = 3, specimens from the 3/4-inch-diameter bar. Tests were conducted at three stress ratios, R = -0.5, R = 0.1, and R = 0.5. The fatigue data were analyzed in accord with Section 9.3.4 of MIL-HDBK-5 and S/N curves in Figures 11 and 12 constructed accordingly.

Downloaded from http://www.everyspec.com

TABLE 3. UNNOTCHED FATIGUE DATA FOR INCONEL 718 STA BAR--LONGITUDINAL DIRECTION

Specimen ID	Maximum Stress, ksi	MPa	R-ratio	Cycles to Failure
7FL7	170.0	(1,172.2)	-0.5	14,820
7FL21	160.0	(1,103.2)	-0.5	18,710
7FL47	140.0	(965.3)	-0.5	46,120
7FL51	130.0	(896.4)	-0.5	76,500
7FL35	120.0	(827.4)	-0.5	109,930
7FL13	110.0	(758.5)	-0.5	241,760
7FL15	100.0	(689.5)	-0.5	238,970
7FL3	90.0	(620.6)	-0.5	518,780
7FL1	80.0	(551.6)	-0.5	4,490,470 (1)
7FL27	77.5	(534.4)	-0.5	DNF
7FL19	180.0	(1,241.1)	0.1	36,466
7FL43	170.0	(1,172.2)	0.1	48,140
7FL57	160.0	(1,103.2)	0.1	75,240
7FL5	140.0	(965.3)	0.1	91,320
7FL17	120.0	(827.4)	0.1	199,950
7FL37	100.0	(689.5)	0.1	461,620
7FL39	100.0	(689.5)	0.1	DNF
7FL29	95.0	(655.0)	0.1	DNF
7FL53	90.0	(620.6)	0.1	DNF
7FL59	80.0	(551.6)	0.1	DNF
7FL49	180.0	(1,241.1)	0.5	19,950
7FL33	170.0	(1,172.2)	0.5	260,340
7FL23	170.0	(1,172.2)	0.5	260,610
7FL31	160.0	(1,103.2)	0.5	282,140
7FL45	150.0	(1,034.3)	0.5	307,230
7FL9	140.0	(965.3)	0.5	753,940
7FL55	130.0	(896.4)	0.5	1,051,710
7FL11	130.0	(896.4)	0.5	DNF
7FL25	120.0	(827.4)	0.5	DNF
7FL41	100.0	(689.5)	0.5	DNF

(1) DNF - did not fail; test ran 10,000,000 cycles and stopped.

Downloaded from http://www.everyspec.com

TABLE 4. NOTCHED, K_t = 3, FATIGUE DATA FOR INCONEL 718 STA BAR--LONGITUDINAL DIRECTION

Specimen ID	Maximum Stress, ksi	MPa	R-ratio	Cycles to Failure
7FL56	100.0	(689.5)	-0.5	2,720
7FL54	90.0	(620.6)	-0.5	7,570
7FL50	80.0	(551.6)	-0.5	11,490
7FL48	60.0	(413.7)	-0.5	22,700
7FL42	50.0	(344.8)	-0.5	64,450
7FL44	40.0	(275.8)	-0.5	56,680
7FL60	40.0	(275.8)	-0.5	126,640
7FL46	30.0	(206.9)	-0.5	283,400
7FL52	20.0	(137.9)	-0.5	1,058,530
7FL58	15.0	(103.4)	-0.5	DNF (1)
7FL20	120.0	(827.4)	0.1	10,060
7FL18	110.0	(758.5)	0.1	11,710
7FL2	100.0	(689.5)	0.1	20,310
7FL14	90.0	(620.6)	0.1	21,930
7FL4	80.0	(551.6)	0.1	30,430
7FL6	70.0	(482.7)	0.1	94,770
7FL8	65.0	(448.2)	0.1	84,830
7FL10	55.0	(379.2)	0.1	297,710
7FL12	50.0	(344.8)	0.1	160,830
7FL16	45.0	(310.3)	0.1	302,000
7FL38	35.0	(241.3)	0.1	DNF
7FL36	140.0	(965.3)	0.5	9,850
7FL34	130.0	(896.4)	0.5	26,540
7FL28	120.0	(827.4)	0.5	21,260
7FL26	100.0	(689.5)	0.5	65,880
7FL40	80.0	(551.6)	0.5	163,500
7FL22	80.0	(551.6)	0.5	184,320
7FL24	60.0	(413.7)	0.5	647,210
7FL32	55.0	(379.2)	0.5	834,600
7FL30	50.0	(344.8)	0.5	DNF

(1) DNF - did not fail; test ran 10,000,000 cycles and stopped.

Downloaded from http://www.everyspec.com

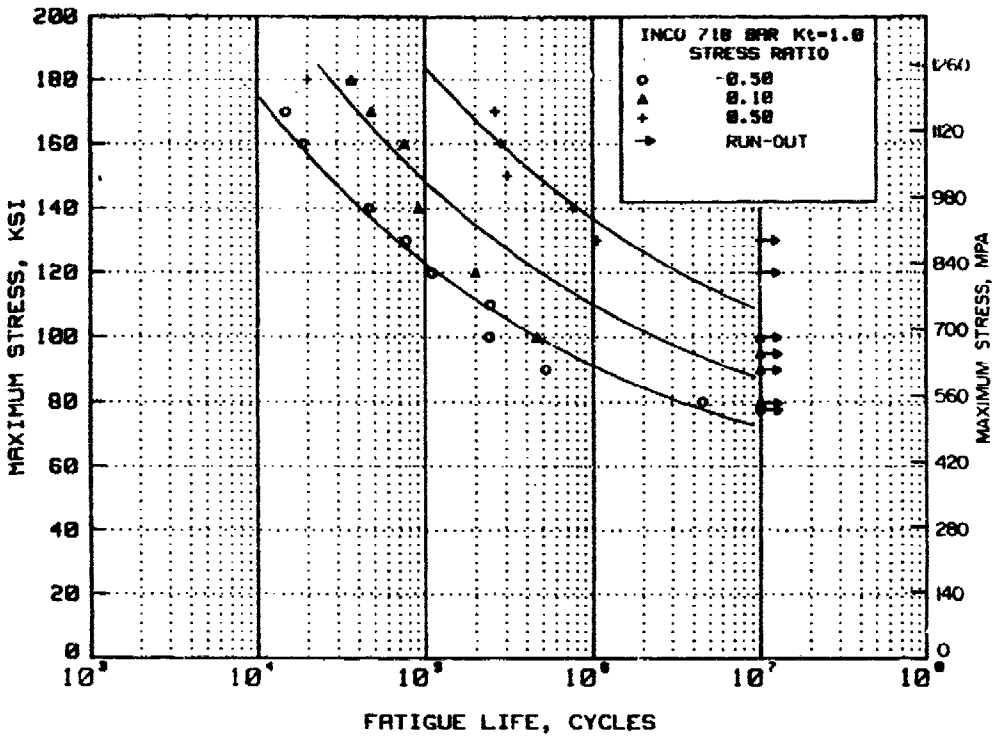

Figure 11. Unnotched axial-stress S/N curves for 3/4-inch-diameter Inconel 718 solution treated and aged bar--longitudinal direction.

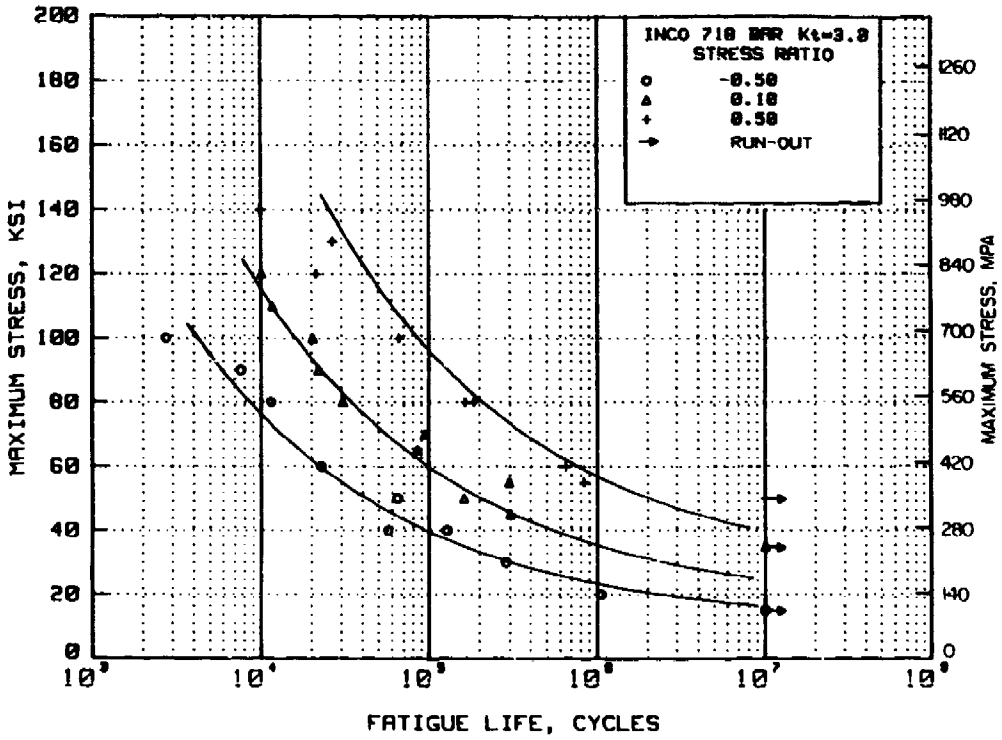

Figure 12. Notched axial-stress S/N curves for 3/4-inch-diameter Inconel 718 solution treated and aged bar--longitudinal direction.

Downloaded from http://www.everyspec.com

Inconel 625 Bar (Annealed)

Background

Inconel 625 has high tensile, creep, and rupture strength, outstanding fatigue and thermal fatigue strength; oxidation and corrosion resistance, and excellent weldability and brazeability. These properties make this alloy attractive for aerospace applications, such as ducting, engine exhaust systems, thrust-reversers, resistance welded honeycomb structures, fuel and hydraulic line tubing, bellows, turbine shroud rings, and heat exchanger tubing. This widely used alloy is currently contained in MIL-HDBK-5, but design values for properties other than tensile yield and ultimate strengths are missing. Consequently, a test program was needed to determine the mechanical properties of Inconel 625 bar in the annealed condition so that design values can be subsequently determined.

Material

Eleven lots of Inconel 625 bar were procured from Inco Alloys International to AMS 5666. The eleven lots represented eight heats. The chemical compositions, as determined by Inco Alloys International, are shown in Table 5. Bars were obtained in the following sizes: 3/4, 2, 2-1/4, 2-1/2, 2-3/4, 3, 3-1/4, 3-1/2, 3-3/4, and 4 inches in diameter. Two heats of 2-inch-diameter bar were procured. Inconel 625 bar is not produced in rectangular shapes; consequently, round bars with sufficient diameter to accommodate bearing specimens in the longitudinal grain direction at the T/4 location were selected. For economy, 3/4-inch-diameter bar was obtained for fatigue tests. Bars were supplied in the annealed condition and tested "as-received."

Location of Test Specimens

For mechanical property data to be usable for the determination of MIL-HDBK-5 design values, tensile, compression, shear, and bearing specimens must be located within the cross section in accord with AMS 2371. Therefore, all specimens, except fatigue, were located with the axis of the specimen at the T/4 location. Since all bars were round, mechanical property tests were

TABLE 5. CHEMICAL COMPOSITION OF INCONEL 625 BAR

Heat Number	Element, percent											
	C	Mn	Fe	S	Si	Ni	Cr	Al	Ti	Mo	Cb+Ta	P
NX4474AG	0.01	0.14	4.10	0.001	0.26	61.35	21.80	0.12	0.19	8.51	3.51	0.011
NX4385AV	0.03	0.13	4.21	0.001	0.29	61.07	21.64	0.31	0.21	8.57	3.53	0.012
NX4117AG	0.01	0.15	4.04	0.001	0.28	60.65	22.09	0.22	0.27	8.56	3.72	0.010
NX4154AG	0.02	0.16	4.11	0.001	0.28	60.89	21.94	0.17	0.19	8.50	3.73	0.013
NX4192AG	0.01	0.19	4.15	0.001	0.28	61.37	21.58	0.15	0.22	8.50	3.54	0.013
NX4234AG	0.01	0.14	3.60	0.001	0.20	61.74	21.91	0.14	0.20	8.53	3.52	0.013
NX3648AG	0.02	0.12	4.09	0.001	0.22	61.57	21.74	0.18	0.21	8.47	3.37	0.011
NX4550AV	0.02	0.14	3.77	0.001	0.26	61.92	21.50	0.12	0.18	8.54	3.47	0.009

Note: Composition of all heats conformed to the requirements of AMS 5666.

Downloaded from http://www.everyspec.com

Downloaded from http://www.everyspec.com

conducted in two grain directions, longitudinal and short transverse, except that bearing tests were performed only in the longitudinal direction, since the short transverse dimensions of most bars would not accommodate bearing specimens. Longitudinal fatigue specimens were located at the T/2 location in the 3/4-inch-diameter bar. The location of the test specimens is shown in Figures 1 through 7. Figure 13 shows the code system used to identify test specimens.

Specimen Configuration

The configurations of test specimens are shown in Appendix B. Subsize tensile specimens were employed for the short transverse grain direction.

Test Results

Tensile. The results of tensile tests are shown in Tables 6 and 6(a). In addition to tensile yield and ultimate strengths, elongation and modulus of elasticity values are indicated. The longitudinal tensile yield and ultimate strength of the 4-inch-diameter bar (Heat NX3648A6) did not meet the minimum values specified in AMS 5666. Typical tensile stress-strain curves for each grain direction are presented in Figure 14. Tensile stress-strain curves were constructed in the same manner as those for Inconel 718 bar.

Compression. The results of compression tests are shown in Tables 6 and 6(a). Compressive modulus of elasticity values are listed in addition to the compressive yield strengths. Typical compressive stress-strain curves are presented in Figure 15 for each grain direction. Compressive stress-strain curves were constructed in the same manner as those for Inconel 718 bar.

Shear. The results of shear tests are shown in Tables 6 and 6(a). Values for shear ultimate strength are listed.

Bearing. The results of bearing tests are shown in Tables 6 and 6(a). Values for longitudinal bearing yield and ultimate strengths for e/D = 1.5 and e/D = 2.0 are presented. Bearing tests were not conducted in the short transverse direction.

Fatigue. The results of axial-stress fatigue tests are shown in Tables 7 and 8. Fatigue tests were conducted only in the longitudinal grain direction

Downloaded from http://www.everyspec.com

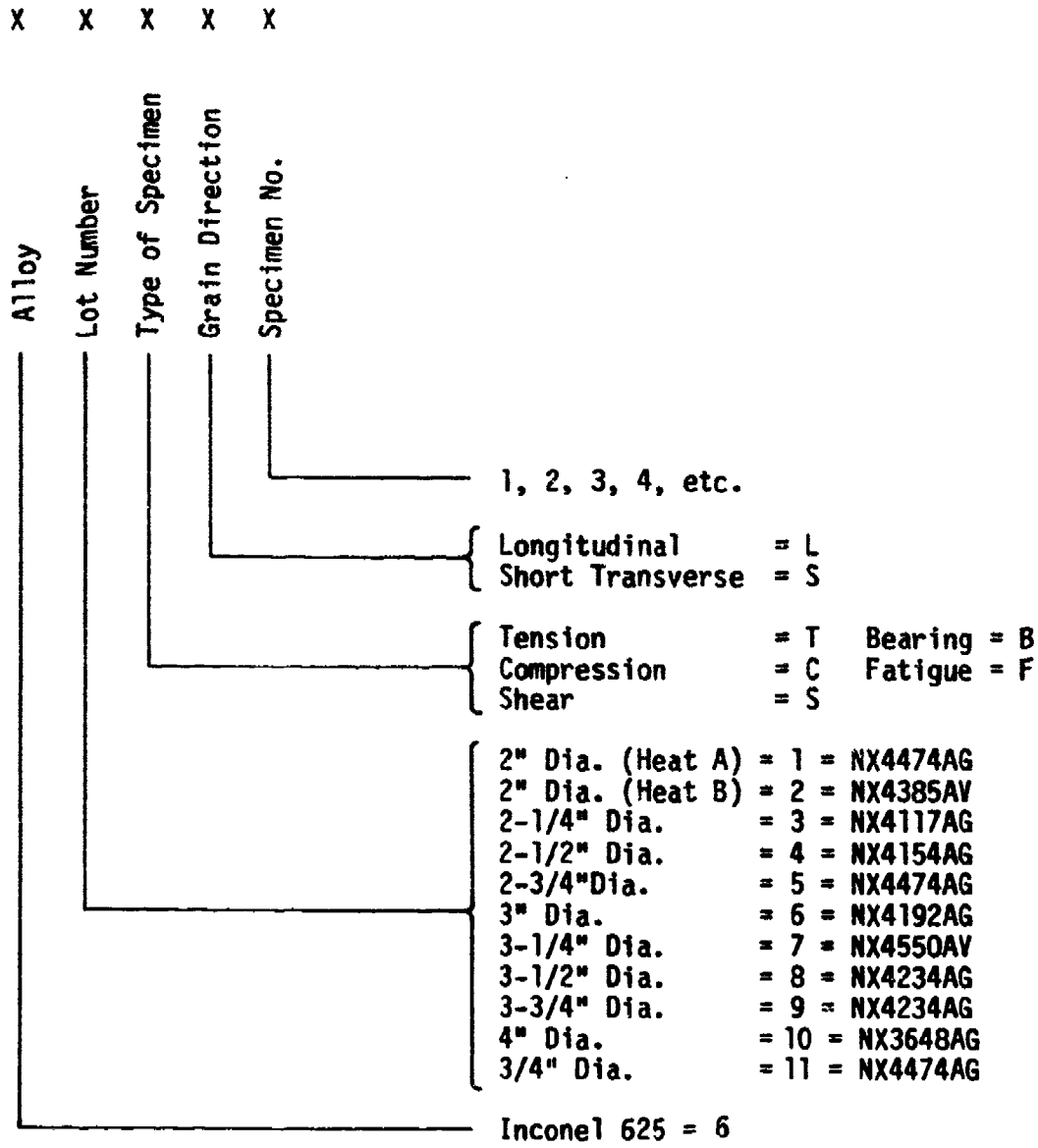

Figure 13. Specimen identification code for Inconel 625 bar.

TABLE 6. MECHANICAL PROPERTIES OF ANNEALED INCONEL 625 BAR

Bar Diameter, inches	Grain Direction	Specimen No.	Tensile				Compressive		Shear	Bearing (1)			
										e/D = 1.5		e/D = 2.0	
			Ultimate Strength, ksi	Yield Strength, ksi	Elongation, percent	Modulus, 10^3 ksi	Yield Strength, ksi	Modulus, 10^3 ksi	Ultimate Strength, ksi	Ultimate Strength, ksi	Yield Strength, ksi	Ultimate Strength, ksi	Yield Strength, ksi
2 (Heat A)	L	1	130.0	63.2	54.0	26.2	63.5	26.0	83.7	216.0	97.3	269.0	114.4
		2	129.5	62.8	53.0	25.4	64.8	27.7	85.1	213.1	94.3	275.3	118.0
		3	130.1	63.6	54.0	22.4	65.9	24.7	86.7	215.9	99.6	272.9	116.5
		Avg.	129.9	63.2	53.7	24.7	64.7	26.1	85.2	215.0	97.1	272.4	116.3
2 (Heat A)	ST	1	132.2	64.7	52.0	28.2	62.4	27.3	86.7				
		2	133.8	62.6	52.0	26.3	62.7	27.3	86.4				
		3	134.4	63.6	52.0	26.3	64.2	27.1	87.7				
		Avg.	133.5	63.6	52.0	26.9	63.1	27.2	86.9				
2 (Heat B)	L	1	130.4	65.0	53.0	24.8	64.2	27.1	87.8	216.4	99.0	257.5	113.4
		2	130.0	65.0	53.0	31.3	62.2	27.7	88.0	211.3	97.4	265.6	124.8
		3	130.1	65.3	54.0	24.0	63.2	27.4	86.8	216.4	100.8	258.7	119.6
		Avg.	130.2	65.1	53.3	26.7	63.2	27.4	87.5	214.7	99.1	260.6	119.3
2 (Heat B)	ST	1	130.8	60.8	52.0	24.9	62.7	26.9	87.5				
		2	130.9	62.9	52.0	28.0	65.0	29.2	87.8				
		3	129.7	64.1	52.0	26.8	65.2	27.3	87.5				
		Avg.	130.5	62.6	52.0	26.6	64.3	27.8	87.6				
2-1/4	L	1	137.4	74.7	48.0	25.7	77.5	29.3	91.1	217.2	109.1	268.0	129.5
		2	139.3	79.1	47.0	28.9	76.7	27.1	90.9	216.5	107.3	276.8	120.2
		3	138.0	76.3	48.0	26.2	75.9	31.8	90.6	221.4	113.0	271.6	130.9
		Avg.	138.2	76.7	47.7	26.9	76.7	29.4	90.9	218.4	109.8	272.1	126.9
2-1/4	ST	1	136.8	75.0	36.0	26.3	76.8	27.9	90.3				
		2	137.3	74.6	36.0	24.0	73.7	27.4	90.2				
		3	137.5	75.4	40.0	25.1	73.4	28.3	90.5				
		Avg.	137.2	75.0	37.3	25.1	74.6	27.9	90.3				
2-1/2	L	1	136.5	72.1	49.0	26.9	72.4	27.1	89.9	216.5	105.3	261.6	130.0
		2	136.7	72.8	49.0	27.0	74.2	27.7	89.5	214.2	103.9	266.2	123.1
		3	135.7	71.1	51.0	28.6	74.3	27.2	90.0	220.6	96.7	258.4	123.0
		Avg.	136.3	72.0	49.7	27.5	73.6	27.3	89.8	217.1	101.9	262.1	125.4

Downloaded from http://www.everyspec.com

TABLE 6. (Continued)

Bar Diameter, inches	Grain Direction	Specimen No.	Tensile				Compressive		Shear	Bearing			
										e/D = 1.5		e/D = 2.0(1)	
			Ultimate Strength, ksi	Yield Strength, ksi	Elongation, percent	Modulus, 10^3 ksi	Yield Strength, ksi	Modulus, 10^3 ksi	Ultimate Strength, ksi	Ultimate Strength, ksi	Yield Strength, ksi	Ultimate Strength, ksi	Yield Strength, ksi
2-1/2	ST	1	133.0	70.5	37.3	23.8	73.8	29.8	89.6				
		2	130.6	69.1	45.1	23.3	75.0	26.6	89.6				
		3	131.6	67.8	43.1	24.6	73.0	27.4	89.3				
		Avg.	131.7	69.1	41.8	23.9	73.9	27.9	89.5				
2-3/4	L	1	133.2	68.8	51.0	27.2	70.8	26.0	89.3	217.1	103.8	267.3	122.2
		2	133.8	67.9	50.0	29.1	69.8	26.0	89.2	211.5	(2)	269.5	124.9
		3	134.0	68.6	50.0	25.9	69.7	26.4	89.4	214.0	101.2	264.0	122.0
		Avg.	133.7	68.4	50.3	27.4	70.1	26.1	89.3	214.2	102.5	266.9	123.0
2-3/4	ST	1	133.8	71.8	41.1	25.2	70.3	28.8	89.2				
		2	131.6	67.6	45.1	26.8	68.6	27.4	88.4				
		3	132.1	67.8	47.1	26.5	68.8	26.8	85.6				
		Avg.	132.5	69.1	44.4	26.2	69.2	27.7	87.7				
3	L	1	132.3	68.0	59.0	29.6	68.6	26.8	88.8	213.1	107.0	256.7	113.7
		2	131.1	66.0	58.0	21.4	69.5	24.9	88.4	212.8	98.8	265.9	106.2
		3	131.5	64.8	58.0	21.8	65.5	25.7	88.9	218.6	104.4	261.6	114.6
		Avg.	131.6	66.3	58.3	24.3	67.9	25.8	88.7	214.3	103.4	261.4	112.2
3	ST	1	131.5	67.3	47.1	28.8	66.0	27.1	87.9				
		2	130.5	65.6	43.1	25.9	70.5	26.8	88.3				
		3	135.6	72.3	41.2	29.3	68.9	27.1	87.4				
		Avg.	132.5	68.4	43.8	28.0	68.5	27.0	87.9				
3-1/4	L	1	133.0	74.5	50.0	25.8	70.6	25.4	90.6	217.4	109.7	266.6	118.2
		2	134.3	79.0	51.0	30.5	69.8	23.8	88.8	218.6	109.9	277.4	129.3
		3	133.0	73.2	53.0	25.0	75.4	26.4	88.2	220.2	111.3	269.2	126.6
		Avg.	133.4	75.6	51.3	27.1	71.9	25.2	89.2	218.7	110.3	271.1	124.7
3-1/4	ST	1	132.3	71.0	43.0	22.1	79.9	27.4	91.2				
		2	134.5	82.1	42.0	21.8	73.4	27.4	89.0				
		3	132.4	73.7	43.0	23.2	76.2	27.4	89.8				
		Avg.	133.1	75.6	42.7	22.4	76.5	27.4	90.0				

Downloaded from http://www.everyspec.com

TABLE 6. (Continued)

Bar Diameter, inches	Grain Direction	Specimen No.	Tensile				Compressive		Shear	Bearing			
										e/D = 1.5		e/D = 2.0 (1)	
			Ultimate Strength, ksi	Yield Strength, ksi	Elongation, percent	Modulus, 10^3 ksi	Yield Strength, ksi	Modulus, 10^3 ksi	Ultimate Strength, ksi	Ultimate Strength, ksi	Yield Strength, ksi	Ultimate Strength, ksi	Yield Strength, ksi
3-1/2	L	1	136.2	73.3	48.0	27.7	60.7	24.9	91.0	221.0	109.8	276.1	128.6
		2	138.0	77.4	47.0	26.1	57.6	24.6	89.6	216.1	106.0	276.0	132.4
		3	136.0	72.8	49.0	31.8	61.0	25.3	90.2	219.3	111.7	268.6	128.3
		Avg.	136.7	74.5	48.0	28.5	59.8	24.9	90.3	218.8	109.1	273.5	129.8
3-1/2	ST	1	133.3	68.1	36.0	23.9	73.9	27.2	89.8				
		2	132.9	65.9	37.0	23.3	74.8	27.4	90.7				
		3	132.8	69.8	34.0	27.8	74.9	28.0	89.7				
		Avg.	133.0	67.9	35.7	25.0	74.5	27.5	90.1				
3-3/4	L	1	136.8	73.6	49.0	35.3	70.0	25.2	91.4	222.4	(2)	273.4	126.6
		2	136.5	73.1	48.0	31.3	67.5	25.2	90.5	219.4	(2)	282.6	135.0
		3	136.6	74.2	48.0	35.7	65.7	25.5	91.5	222.2	114.3	271.3	125.0
		Avg.	136.6	73.6	48.3	34.1	67.7	25.3	91.2	221.3	114.3	275.8	128.9
3-3/4	ST	1	134.2	69.5	31.0	[illegible]	77.0	27.1	87.7				
		2	134.9	65.5	38.0	26.0	76.9	27.4	92.0				
		3	136.1	70.7	39.0	25.8	76.7	27.2	90.8				
		Avg.	135.1	68.6	36.0	24.9	76.9	27.2	90.2				
4	L	1	116.9	56.2	45.0	33.6	57.5	24.5	79.4	186.2	84.0	218.8	101.0
		2	116.1	56.7	53.0	29.6	56.9	24.4	79.0	184.4	86.6	214.2	104.3
		3	116.1	56.6	53.0	26.9	57.4	25.2	78.8	180.7	85.4	213.1	103.4
		Avg.	116.4	56.5	50.3	30.0	57.3	24.7	79.1	183.7	85.3	215.3	102.9
4	ST	1	115.1	57.0	53.0	27.3	56.6	27.7	76.7				
		2	114.9	55.8	49.0	30.6	56.1	27.4	78.3				
		3	114.9	56.2	50.0	31.1	56.4	26.4	78.7				
		Avg.	115.0	56.3	50.7	29.7	56.4	27.2	77.9				
3/4	L	1	132.8	73.4	54.8	34.9							
		2	133.6	74.1	53.3	34.0							
		Avg.	133.2	73.8	54.1	34.5							

(1) Specimen numbers for e/D = 2.0 were 4 through 6.
(2) Uncharacteristic load-deformation curve.

Downloaded from http://www.everyspec.com

TABLE 6(a). MECHANICAL PROPERTIES OF ANNEALED INCONEL 625 BAR

Bar Diameter, mm	Grain Direction	Specimen No.	Tensile				Compressive		Shear	Bearing e/D = 1.5		Bearing e/D = 2.0 (1)	
			Ultimate Strength, MPa	Yield Strength, MPa	Elongation, percent	Modulus, GPa	Yield Strength, MPa	Modulus, MPa	Ultimate Strength, GPa	Ultimate Strength, MPa	Yield Strength, KPa	Ultimate Strength, MPa	Yield Strength, MPa
50.8 (Heat A)	L	1	896.4	435.8	54.0	180.6	437.8	179.3	577.1	1489.2	670.7	1855.1	788.8
		2	892.9	433.0	53.0	175.1	446.8	191.0	586.8	1469.2	650.5	1898.3	813.4
		3	897.0	438.5	54.0	154.4	454.4	170.3	597.8	1488.9	687.0	1881.3	803.5
		Avg.	895.4	435.8	53.7	170.1	446.3	180.2	587.2	1482.4	669.4	1878.2	801.9
50.8 (Heat A)	ST	1	911.5	446.1	52.0	194.4	430.2	188.2	597.8				
		2	922.6	431.6	52.0	181.3	432.3	188.2	595.7				
		3	926.7	438.5	52.0	181.3	442.7	186.9	604.7				
		Avg.	920.3	438.8	52.0	185.7	435.1	187.8	599.4				
50.8 (Heat B)	L	1	899.1	448.2	53.0	171.0	442.7	186.9	605.4	1492.0	682.3	1775.8	782.0
		2	896.4	448.2	53.0	215.8	428.9	191.0	606.9	1456.6	671.6	1831.6	860.3
		3	897.0	450.2	54.0	165.5	435.8	188.9	598.5	1491.8	695.2	1783.9	824.6
		Avg.	897.5	448.9	53.3	184.1	435.8	188.9	603.5	1480.1	683.0	1797.1	822.3
50.8 (Heat B)	ST	1	901.9	419.2	52.0	171.7	432.3	185.5	603.3				
		2	902.6	433.7	52.0	193.1	448.2	201.3	605.4				
		3	894.3	442.0	52.0	184.8	449.6	188.2	603.3				
		Avg.	899.6	431.6	52.0	183.2	443.3	191.7	604.0				
57.2	L	1	947.4	515.1	48.0	177.2	534.4	202.0	628.1	1497.7	752.1	1848.1	892.8
		2	960.5	545.4	47.0	199.3	528.8	186.9	626.8	1493.1	740.1	1908.3	828.5
		3	951.5	526.1	48.0	180.6	523.3	-219.3	624.7	1526.9	779.0	1872.6	902.9
		Avg.	953.1	528.8	47.7	185.7	528.8	202.7	626.5	1505.9	757.1	1876.3	874.7
57.2	ST	1	943.2	517.1	36.0	181.3	529.5	192.4	622.6				
		2	946.7	514.4	36.0	165.5	508.2	188.9	621.9				
		3	948.1	519.9	40.0	173.1	506.1	195.1	624.0				
		Avg.	946.0	517.1	37.3	173.3	514.6	192.1	622.8				
63.5	L	1	941.2	497.1	49.0	185.5	499.2	186.9	619.9	1492.5	725.9	1803.7	896.7
		2	942.5	502.0	49.0	186.2	511.6	191.0	617.1	1476.8	716.1	1835.4	848.9
		3	935.7	490.2	51.0	197.2	512.3	187.5	620.6	1521.0	666.5	1782.0	847.9
		Avg.	939.8	496.4	49.7	189.6	507.7	188.5	619.2	1496.8	702.9	1807.0	864.5

Downloaded from http://www.everyspec.com

TABLE 6(a). (Continued)

Bar Diameter, mm	Grain Direction	Specimen No.	Tensile				Compressive		Shear	Bearing (1)			
										e/D = 1.5		e/D = 2.0	
			Ultimate Strength, MPa	Yield Strength, MPa	Elongation, percent	Modulus, GPa	Yield Strength, MPa	Modulus, MPa	Ultimate Strength, GPa	Ultimate Strength, MPa	Yield Strength, MPa	Ultimate Strength, MPa	Yield Strength, MPa
63.5	ST	1	917.0	486.1	37.3	164.1	508.9	205.5	617.8				
		2	900.5	476.4	45.1	160.7	517.1	183.4	617.8				
		3	907.4	467.5	43.1	169.6	503.3	188.9	615.7				
		Avg.	908.3	476.7	41.8	164.8	509.8	192.6	617.1				
69.8	L	1	918.4	474.4	51.0	187.5	488.2	179.3	615.7	1497.1	715.5	1843.3	842.3
		2	922.6	468.2	50.0	200.6	481.3	179.3	615.0	1458.5	(2)	1857.9	861.2
		3	923.9	473.0	50.0	178.6	480.6	182.0	616.4	1475.3	698.0	1820.4	841.3
		Avg.	921.6	471.8	50.3	188.9	483.3	180.2	615.7	1477.0	706.7	1840.6	848.3
69.8	ST	1	922.6	495.1	41.1	173.8	484.7	198.6	615.0				
		2	907.4	466.1	45.1	184.8	473.0	188.9	609.5				
		3	910.8	467.5	47.1	182.7	474.4	184.8	590.2				
		Avg.	913.6	476.2	44.4	180.4	477.4	190.8	604.9				
76.2	L	1	912.2	468.9	59.0	204.1	473.0	184.8	612.3	1469.3	738.0	1770.1	784.1
		2	903.9	455.1	58.0	147.6	479.2	171.7	609.5	1467.2	681.2	1833.3	846.4
		3	906.7	446.8	58.0	150.3	451.6	177.2	613.0	1507.1	719.6	1803.7	789.9
		Avg.	907.6	456.9	58.3	167.3	467.9	177.9	611.6	1481.2	712.9	1802.4	773.5
76.2	ST	1	906.7	464.0	47.1	198.6	455.1	186.9	606.1				
		2	899.8	452.3	43.1	178.6	486.1	184.8	608.8				
		3	935.0	498.5	41.2	202.0	475.1	186.9	602.6				
		Avg.	913.8	471.6	43.8	193.1	472.1	186.2	605.8				
82.6	L	1	917.0	513.7	50.0	177.9	486.8	175.1	624.7	1499.0	756.4	1838.4	814.7
		2	926.0	544.7	51.0	210.3	481.3	164.1	612.3	1507.0	757.6	1912.6	891.9
		3	917.0	504.7	53.0	172.4	519.9	182.0	608.1	1518.5	767.1	1856.3	873.1
		Avg.	920.0	521.0	51.3	186.9	496.0	173.8	615.0	1508.2	760.4	1869.1	859.9
82.6	ST	1	912.2	489.5	43.0	152.4	550.9	188.9	628.8				
		2	927.4	566.1	42.0	150.3	506.1	188.9	613.7				
		3	912.9	508.2	43.0	160.0	525.4	188.9	619.2				
		Avg.	917.5	521.3	42.7	154.2	527.5	188.9	620.6				

Downloaded from http://www.everyspec.com

TABLE 6(a). (Continued)

Bar Diameter, mm	Grain Direction	Specimen No.	Tensile Ultimate Strength, MPa	Tensile Yield Strength, MPa	Tensile Elongation, percent	Tensile Modulus, GPa	Compressive Yield Strength, MPa	Compressive Modulus, MPa	Shear Ultimate Strength, GPa	Bearing e/D = 1.5 Ultimate Strength, MPa	Bearing e/D = 1.5 Yield Strength, MPa	Bearing e/D = 2.0 (1) Ultimate Strength, MPa	Bearing e/D = 2.0 (1) Yield Strength, MPa
88.9	L	1	939.1	505.4	48.0	191.0	418.5	171.7	627.4	1524.1	756.8	1903.8	887.0
		2	951.5	533.7	47.0	180.0	397.2	169.6	617.8	1490.3	730.6	1902.7	912.6
		3	937.7	502.0	49.0	219.3	420.6	174.4	621.9	1512.3	770.2	1851.7	884.7
		Avg.	942.8	513.7	48.0	196.7	412.1	171.9	622.4	1508.9	752.5	1886.1	894.8
88.9	ST	1	919.1	469.5	36.0	164.8	509.5	187.5	619.2				
		2	916.3	454.4	37.0	160.7	515.7	188.9	625.4				
		3	915.7	481.3	34.0	191.7	516.4	193.1	618.5				
		Avg.	917.0	468.4	35.7	172.4	513.9	189.8	621.0				
95.2	L	1	943.2	507.5	49.0	243.4	482.7	173.8	630.2	1533.7	(2)	1885.2	872.8
		2	941.2	504.0	48.0	215.8	465.4	173.8	624.2	1512.5	(2)	1948.3	930.6
		3	941.9	511.6	48.0	246.2	453.0	175.8	631.1	1532.1	788.4	1870.7	861.9
		Avg.	942.1	507.7	48.3	235.1	467.0	174.4	628.5	1526.1	788.4	1901.4	888.4
95.2	ST	1	925.3	479.2	31.0	157.2	530.9	186.9	605.0				
		2	930.1	451.6	38.0	179.3	530.2	188.9	634.5				
		3	938.4	487.5	39.0	177.9	528.8	187.5	625.9				
		Avg.	931.3	472.8	36.0	171.5	530.0	187.8	621.8				
101.6	L	1	806.0	387.5	45.0	231.7	396.5	168.9	547.5	1283.7	579.2	1508.7	696.5
		2	800.5	390.9	53.0	204.1	392.3	168.2	544.7	1271.2	596.8	1476.7	719.3
		3	800.5	390.3	53.0	185.5	395.8	173.8	543.5	1245.8	588.5	1469.0	713.0
		Avg.	802.3	389.6	50.3	207.1	394.9	170.3	545.2	1266.9	588.2	1484.8	709.6
101.6	ST	1	793.6	393.0	53.0	188.2	390.3	191.0	529.1				
		2	792.2	384.7	49.0	211.0	386.8	188.9	540.2				
		3	792.2	387.5	50.0	214.4	388.9	182.0	542.5				
		Avg.	792.7	388.4	50.7	204.6	388.6	187.3	537.2				
19.0	L	1	915.7	506.1	54.8	240.6							
		2	921.2	510.9	53.3	234.4							
		Avg.	918.4	508.5	54.1	237.5							

(1) Specimen numbers for e/D = 2.0 were 4 through 6.
(2) Uncharacteristic load-deformation curve.

Downloaded from http://www.everyspec.com

Downloaded from http://www.everyspec.com

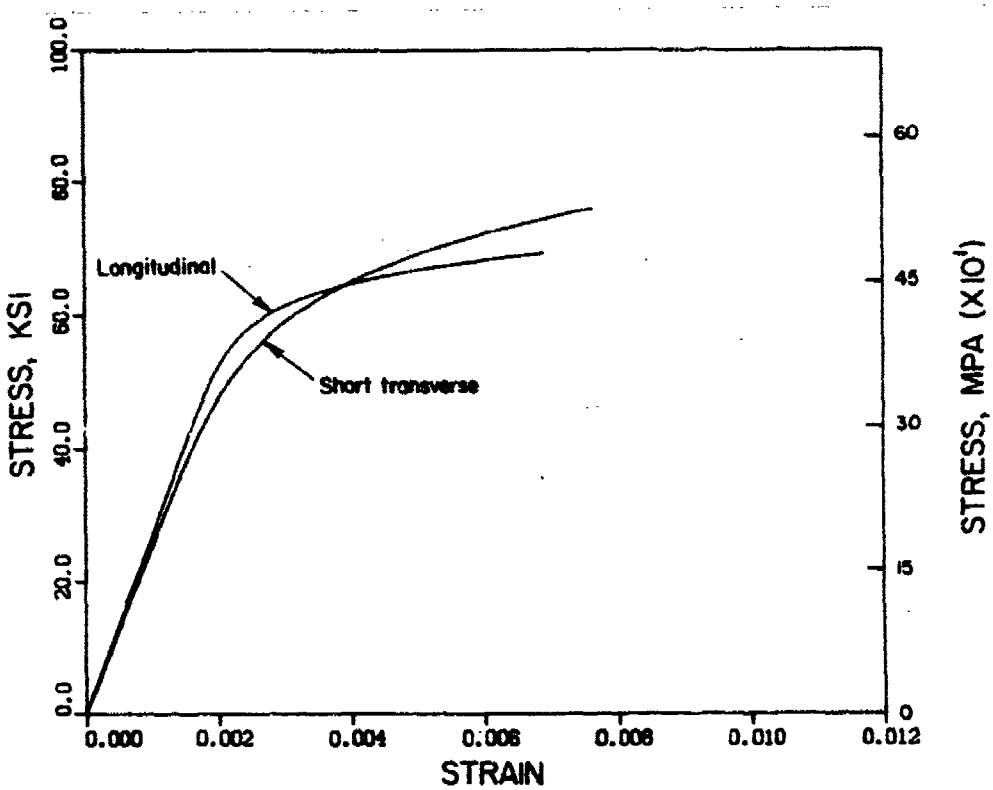

Figure 14. Typical tensile stress-strain curves for annealed Inconel 625 bar.

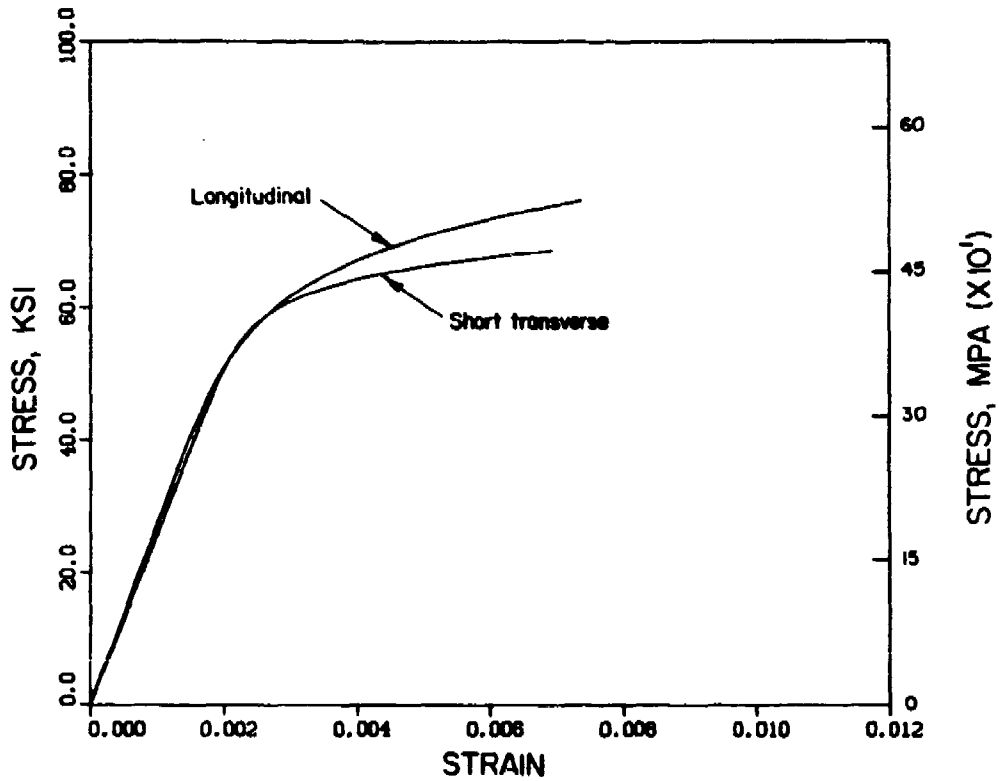

Figure 15. Typical compressive stress-strain curves for annealed Inconel 625 bar.

Downloaded from http://www.everyspec.com

TABLE 7. UNNOTCHED FATIGUE DATA FOR ANNEALED INCONEL 625 BAR--LONGITUDINAL DIRECTION

Specimen ID	Maximum Stress, ksi	MPa	R-ratio	Cycles to Failure
611FL7	120.0	(827.4)	-0.5	110 (1)
611FL15	115.0	(792.9)	-0.5	8,000
611FL19	112.5	(775.7)	-0.5	11,370
611FL9	110.0	(758.5)	-0.5	21,310
611FL3	90.0	(620.6)	-0.5	92,760
611FL5	80.0	(551.6)	-0.5	189,960
611FL11	80.0	(551.6)	-0.5	206,730
611FL13	75.0	(517.1)	-0.5	334,810
611FL17	72.5	(499.9)	-0.5	444,460
611FL1	70.0	(482.7)	-0.5	DNF (2)
611FL33	140.0	(965.3)	0.1	20 (1)
611FL39	125.0	(861.9)	0.1	47,450
611FL35	120.0	(827.4)	0.1	60,570
611FL31	110.0	(758.5)	0.1	128,800
611FL27	100.0	(689.5)	0.1	167,230
611FL25	90.0	(620.6)	0.1	359,710
611FL37	80.0	(551.6)	0.1	642,550
611FL23	80.0	(551.6)	0.1	863,260
611FL29	70.0	(482.7)	0.1	DNF
611FL21	70.0	(482.7)	0.1	7,543,980
611FL47	130.0	(896.4)	0.5	20 (1)
611FL51	127.0	(875.7)	0.5	222,400
611FL49	125.0	(861.9)	0.5	125,000
611FL45	120.0	(827.4)	0.5	370,150
611FL53	115.0	(792.9)	0.5	626,440
611FL55	112.5	(775.7)	0.5	800,750
611FL59	110.0	(758.5)	0.5	622,810
611FL57	110.0	(758.5)	0.5	DNF
611FL43	100.0	(689.5)	0.5	DNF
611FL41	70.0	(482.7)	0.5	DNF

(1) Cycle count below 10^3, not plotted.

(2) DNF - did not fail; test ran 10,000,000 cycles and stopped.

Downloaded from http://www.everyspec.com

TABLE 8. NOTCHED, K_t = 3, FATIGUE DATA FOR ANNEALED INCONEL 625 BAR--LONGITUDINAL DIRECTION

Specimen ID	Maximum Stress, ksi	MPa	R-ratio	Cycles to Failure	
611FL46	75.0	(517.1)	-0.5	11,350	
611FL38	70.0	(482.7)	-0.5	14,570	
611FL20	65.0	(448.2)	-0.5	24,890	
611FL12	60.0	(413.7)	-0.5	58,330	
611FL8	55.0	(379.2)	-0.5	104,190	(1)
611FL6	55.0	(379.2)	-0.5	144,300	
611FL34	50.0	(344.8)	-0.5	263,440	
611FL10	50.0	(344.8)	-0.5	977,110	
611FL4	45.0	(310.3)	-0.5	DNF	(2) (3)
611FL2	40.0	(275.8)	-0.5	146,850	
611FL48	100.0	(689.5)	0.1	8,120	
611FL50	80.0	(551.6)	0.1	36,700	
611FL40	70.0	(482.7)	0.1	67,140	
611FL18	65.0	(448.2)	0.1	98,450	
611FL14	60.0	(413.7)	0.1	542,249	
611FL16	55.0	(379.2)	0.1	936,100	
611FL28	50.0	(344.8)	0.1	434,270	(4)
611FL26	50.0	(344.8)	0.1	488,750	(4)
611FL32	45.0	(310.3)	0.1	528,550	
611FL44	45.0	(310.3)	0.1	4,868,610	
611FL60	120.0	(827.4)	0.5	21,000	
611FL54	110.0	(758.5)	0.5	24,740	
611FL56	100.0	(689.5)	0.5	39,120	
611FL52	90.0	(620.6)	0.5	90,000	
611FL42	75.0	(517.1)	0.5	426,090	
611FL30	70.0	(482.7)	0.5	677,380	
611FL58	65.0	(448.2)	0.5	845,520	
611FL22	65.0	(448.2)	0.5	906,420	
611FL36	60.0	(413.7)	0.5	7,057,900	
611FL24	60.0	(413.7)	0.5	DNF	

(1) Inadvertently overloaded.

(2) DNF - did not fail; test ran 10,000,000 cycles and stopped.

(3) Regripped four times due to hydraulic grip malfunction; specimen may have been subjected to bending.

(4) Misaligned.

Downloaded from http://www.everyspec.com

utilizing unnotched and notched, $K_t = 3$, specimens from the 3/4-inch-diameter bar. Tests were conducted at three stress ratios, $R = -0.5$, $R = 0.1$, and $R = 0.5$. The fatigue data were analyzed in accord with Section 9.3.4 of MIL-HDBK-5 and S/N curves in Figures 16 and 17 constructed accordingly.

Downloaded from http://www.everyspec.com

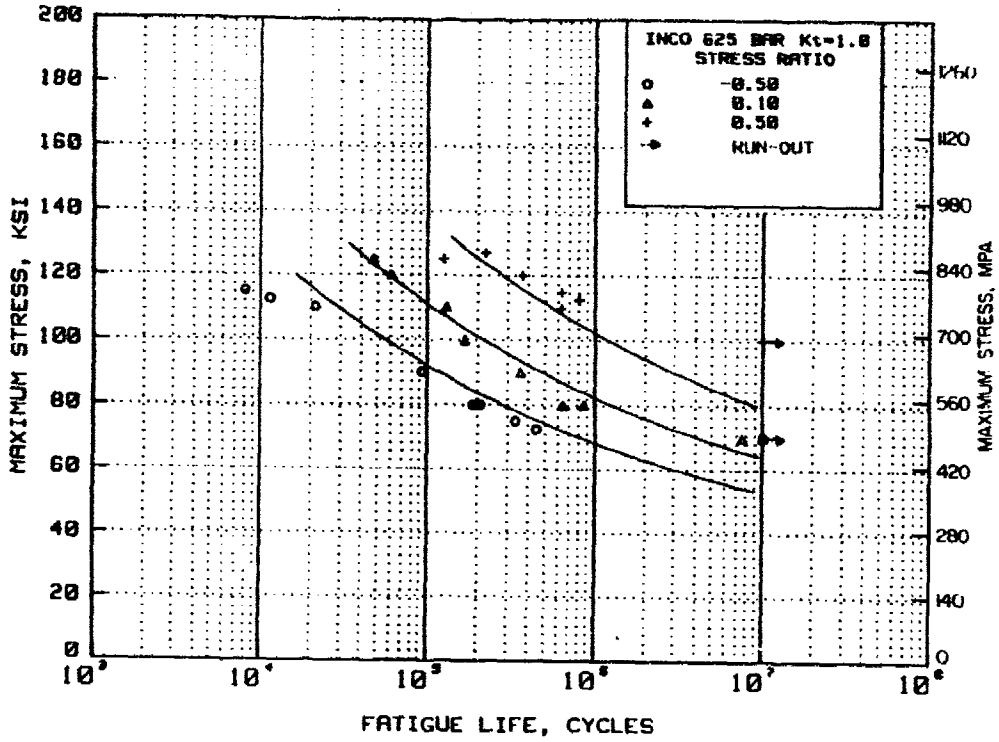

Figure 16. Unnotched axial-stress S/N curves for 3/4-inch-diameter annealed Inconel 625 bar--longitudinal direction.

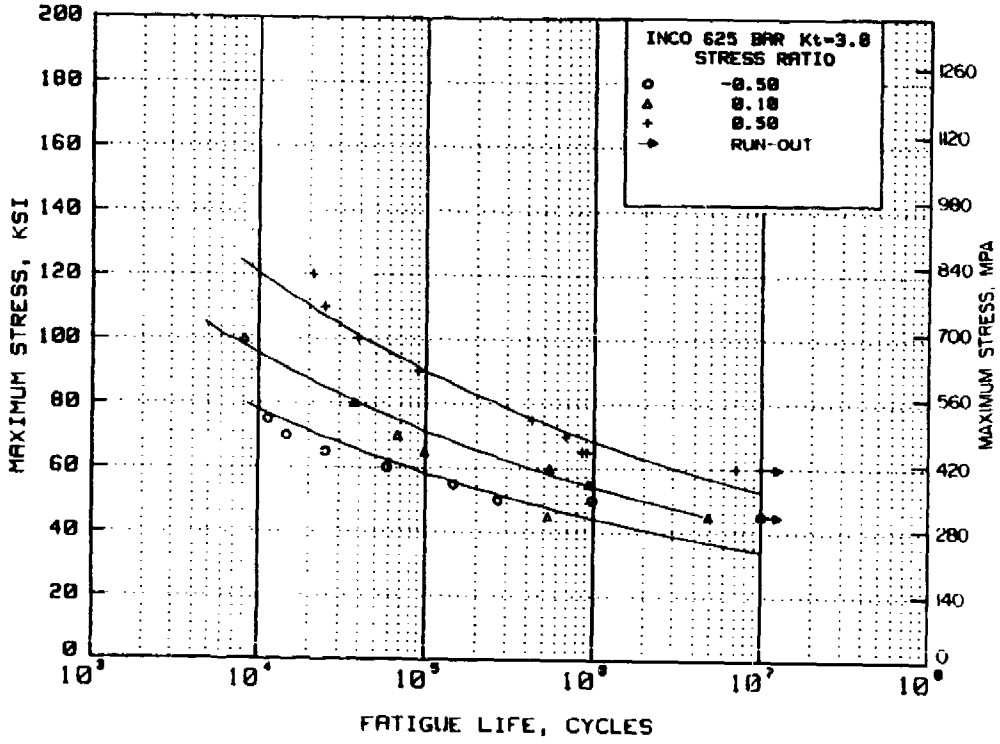

Figure 17. Notched axial-stress S/N curves for 3/4-inch-diameter annealed 625 bar--longitudinal direction.

Downloaded from http://www.everyspec.com

Inconel 625 Sheet (Annealed)

Background

Inconel 625 has high tensile, creep, and rupture strength, outstanding fatigue and thermal fatigue strength; oxidation and corrosion resistance, and excellent weldability and brazeability. These properties make this alloy attractive for aerospace applications, such as ducting, engine exhaust systems, thrust-reversers, resistance welded honeycomb structures, fuel and hydraulic line tubing bellows, turbine shroud rings, and heat exchanger tubing. This widely used alloy is currently contained in MIL-HDBK-5, but design values for properties other than tensile yield and ultimate strengths are missing. Consequently, a test program was needed to determine the mechanical properties of Inconel 625 sheet in the annealed condition so that design values can be subsequently determined.

Material

Ten heats of Inconel 625 sheet were procured from Inco Alloys International to AMS 5599. The chemical compositions, as determined by Inco Alloys International, are shown in Table 9. Sheets were obtained in the following thicknesses: 0.050, 0.063, 0.078, 0.093, 0.125, and 0.250 inch. Two heats of 0.063-, 0.078-, and 0.125-inch-thick sheet were procured to provide ten heats. The sheets were supplied in the annealed condition and tested "as-received."

Location of Test Specimens

The location of test specimens is shown in Figures 18 and 19. Figure 20 shows the code system used to identify test specimens.

Specimen Configuration

The configurations of the test specimens are shown in Appendix B. All specimens were full sheet thickness, except bearing specimens from 0.125-, 0.187-, and 0.250-inch-thick sheets were machined to 0.100 $\pm$ 0.005-inch thickness by removing an equal amount of material from each surface.

TABLE 9. CHEMICAL COMPOSITION OF INCONEL 625 SHEET

Heat Number	Element, percent											
	C	Mn	Fe	S	Si	Ni	Cr	Al	Ti	Mo	Cb+Ta	P
VX0070AK	0.03	0.09	4.07	0.001	0.15	60.80	22.36	0.22	0.24	8.66	3.37	0.006
VX0030AK	0.02	0.08	4.31	0.001	0.13	61.04	21.94	0.23	0.29	8.45	3.50	0.006
NX15E8AK	0.01	0.08	4.39	0.001	0.11	61.22	21.90	0.20	0.21	8.43	3.44	0.006
VX0028AK	0.03	0.10	4.33	0.001	0.14	60.75	22.17	0.22	0.25	8.55	3.45	0.007
VX0055AK	0.01	0.06	4.53	0.001	0.09	60.87	21.95	0.22	0.25	8.64	3.37	0.004
VX0041AK	0.02	0.06	4.48	0.001	0.07	60.76	22.12	0.24	0.22	8.53	3.49	0.004
VX0037AK	0.02	0.08	3.87	0.001	0.14	61.34	22.09	0.19	0.23	8.48	3.55	0.006
VX0056AK	0.02	0.05	4.50	0.001	0.08	60.78	22.07	0.26	0.25	8.54	3.45	0.004
VX0015AK	0.02	0.07	4.32	0.001	0.14	60.87	22.04	0.20	0.24	8.56	3.53	0.006
VX0069AK	0.03	0.09	3.85	0.001	0.11	62.05	21.75	0.17	0.17	8.36	3.41	0.006

Note: Composition of all heats conformed to the requirements of AMS 5599.

Downloaded from http://www.everyspec.com

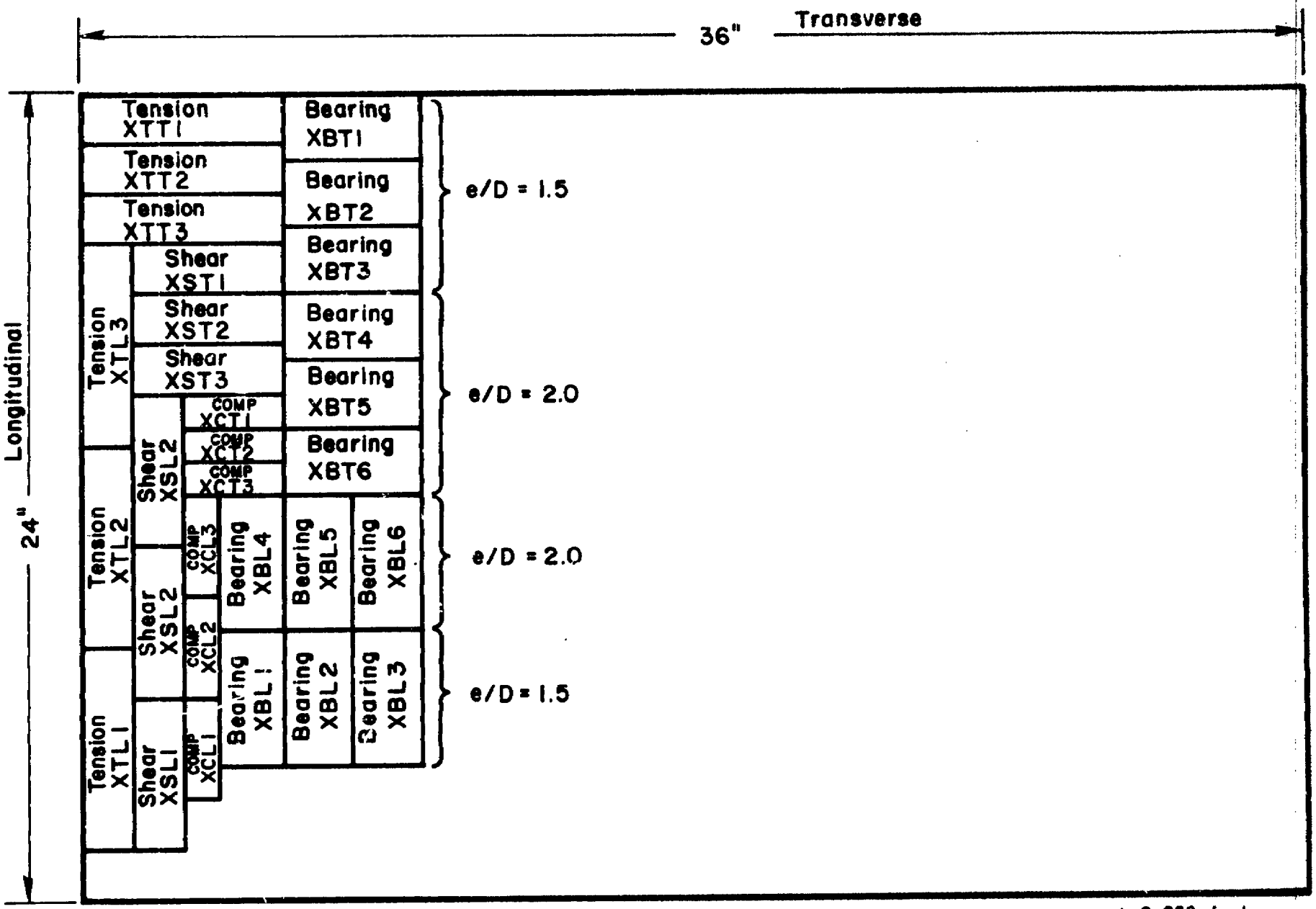

Figure 18. Location of test specimens for annealed Inconel 625 sheet--all thicknesses except 0.093 inch.

Downloaded from http://www.everyspec.com

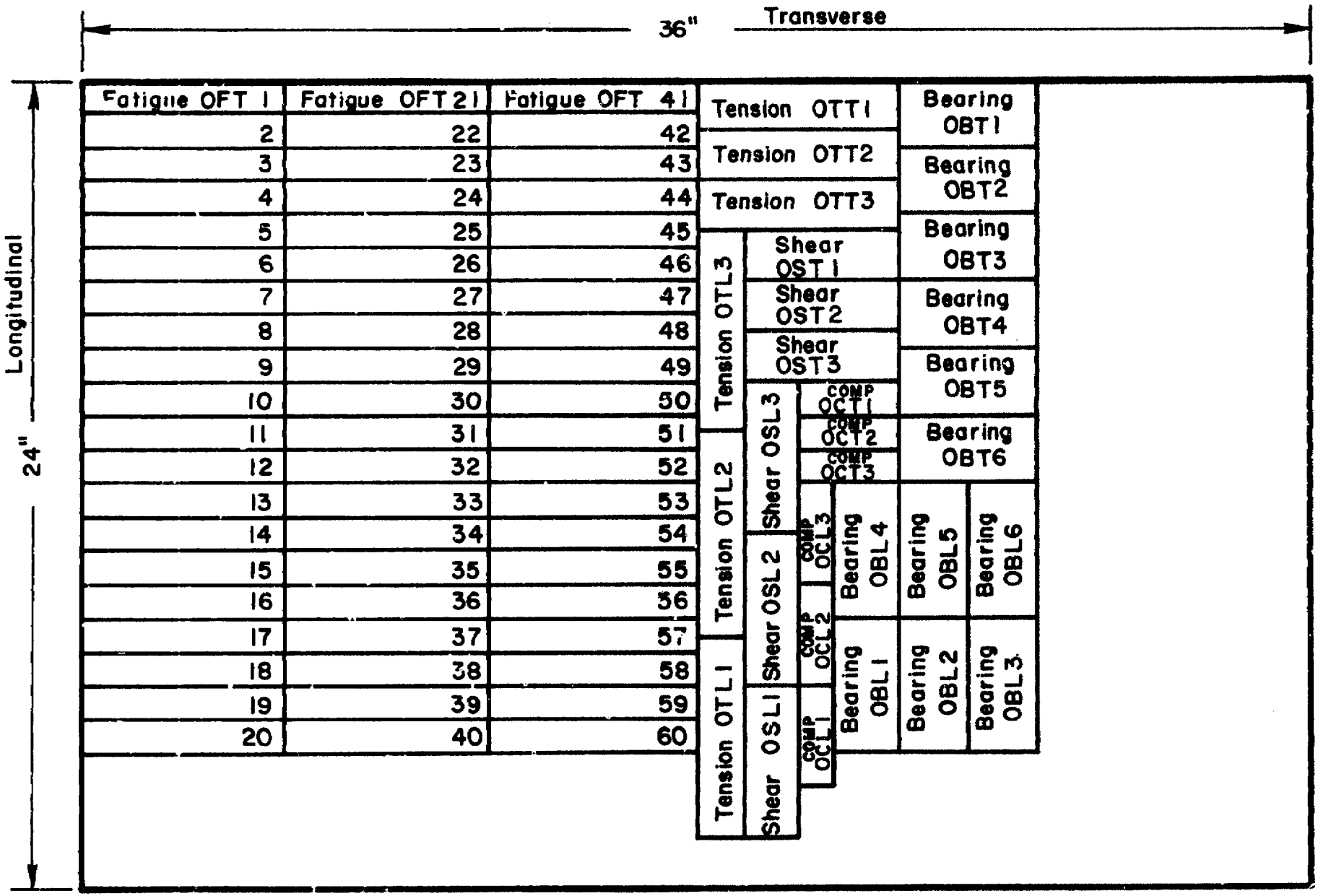

Figure 19. Location of test specimens for annealed Inconel 625 sheet--0.093-inch thick.

Downloaded from http://www.everyspec.com

Downloaded from http://www.everyspec.com

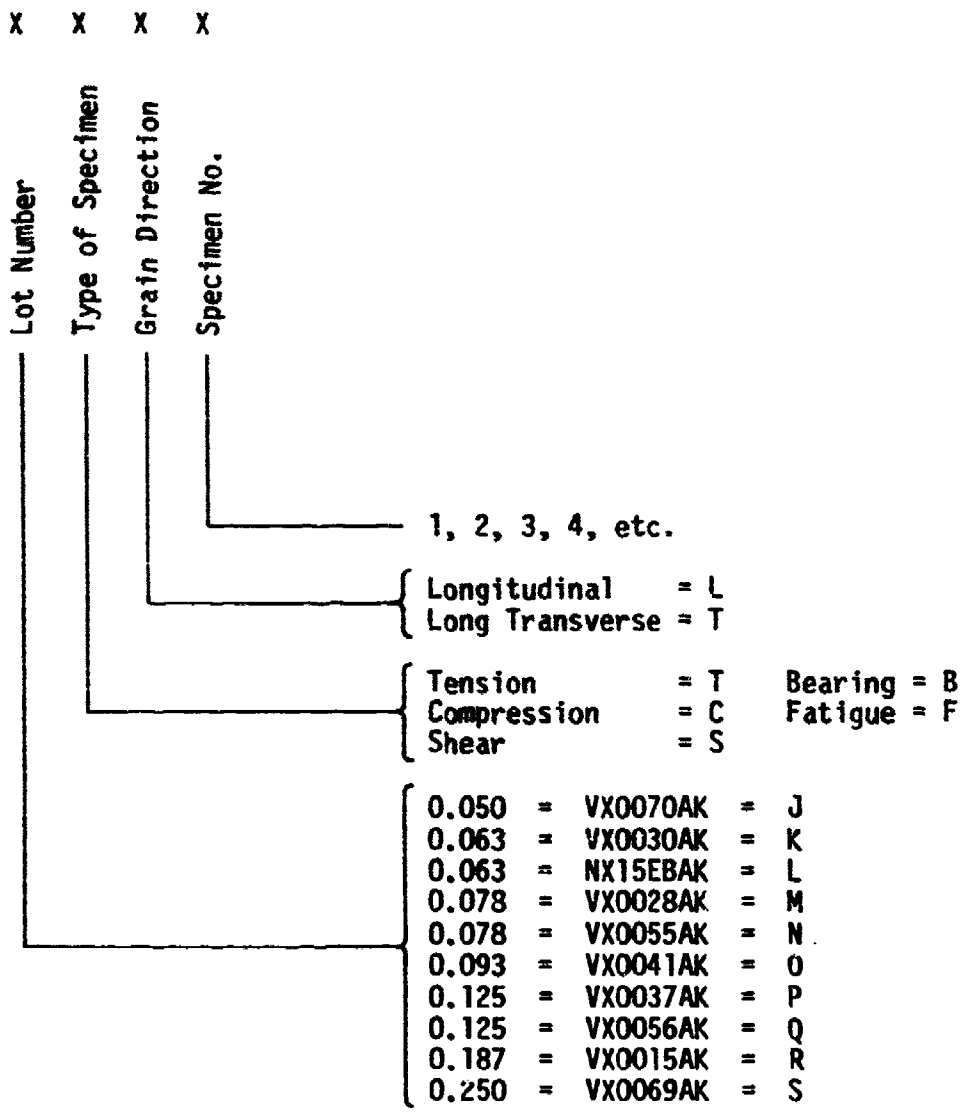

Figure 20. Specimen identification code for Inconel 625 sheet.

Downloaded from http://www.everyspec.com

Test Results

Tensile. The results of the tensile tests are shown in Tables 10 and 10(a). In addition to tensile yield and ultimate strengths, elongation and modulus of elasticity values are indicated. The long transverse tensile yield strength of one heat (VX0037AK) of 0.125-inch sheet was marginally below the minimum value of 60 ksi specified in AMS 5599. Typical tensile stress-strain curves for each grain direction are presented in Figure 21. Tensile stress-strain curves were constructed in the same manner as those for Inconel 718 bar.

Compression. The results of compression tests are shown in Tables 10 and 10(a). Compressive modulus of elasticity values are listed in addition to compressive yield strengths. Typical compressive stress-strain curves are presented in Figure 22 for each grain direction. The compressive stress-strain curves were constructed in the same manner as those for Inconel 718 bar.

Shear. The results of tension-shear tests are shown in Tables 10 and 10(a). Values for shear ultimate strength are listed.

Bearing. The results of the bearing tests are shown in Tables 10 and 10(a). Values for bearing yield and ultimate strengths for e/D = 1.5 and e/D = 2.0 are listed.

Fatigue. The results of axial-stress fatigue tests are presented in Tables 11 and 12. All fatigue test specimens were taken from one heat of 0.093-inch-thick sheet. Fatigue tests were conducted only in the long transverse grain direction utilizing unnotched and notched, $K_t = 3$, specimens. Tests were conducted at three stress ratios, R = -0.5, R = 0.1, and R = 0.5.

Initially, the fatigue data were analyzed according to Section 9.3.4 of MIL-HDBK-5, which specifies that runouts not be included. This analytical procedure resulted in extremely conservative fatigue strength estimates in the high cycle region, ($N_f > 10^6$). The data were reanalyzed treating the runouts as failures. Also, runouts significantly below those exhibiting the highest stress were not included in the analyses. These changes in the analytical procedure produced S/N curves which fit the data better, especially in the high cycle region, ($N_f > 10^6$). These S/N curves are presented in Figures 23 and 24.

TABLE 10. MECHANICAL PROPERTIES OF ANNEALED INCONEL 625 SHEET

Plate Thickness, inches	Grain Direction	Specimen No.	Tensile				Compressive		Shear	Bearing (1)			
										e/D = 1.5		e/D = 2.0	
			Ultimate Strength, ksi	Yield Strength, ksi	Elongation, percent	Modulus, 10^3 ksi	Yield Strength, ksi	Modulus, 10^3 ksi	Ultimate Strength, ksi	Ultimate Strength, ksi	Yield Strength, ksi	Ultimate Strength, ksi	Yield Strength, ksi
0.050 VX0070AK	L	1	138.3	74.7	44.5	28.5	76.5	29.9	113.8	233.6	119.0	262.4	151.9
		2	138.8	76.0	44.0	28.9	77.0	30.0	116.8	233.5	119.4	295.8	147.1
		3	136.4	69.4	45.5	28.5	76.5	30.4	114.5	236.1	120.3	288.5	(2)
		Avg.	137.8	73.4	44.7	28.6	76.7	30.1	115.0	234.4	119.6	282.2	149.5
0.050 VX0070AK	LT	1	135.9	74.4	44.5	28.6	78.9	31.1	116.5	233.3	122.7	274.0	145.6
		2	135.3	75.0	45.0	28.1	79.3	31.3	112.5	233.0	117.0	284.3	146.5
		3	135.5	74.4	46.0	28.6	79.5	31.3	112.5	219.4	115.4	276.1	140.9
		Avg.	135.6	74.6	45.2	28.4	79.2	31.2	113.8	228.6	118.4	278.1	144.4
0.063 VX0030AK	L	1	125.8	67.1	48.5	26.3	69.7	30.6	110.2	220.9	113.5	285.1	136.6
		2	127.0	67.3	49.0	28.3	69.8	30.0	109.7	221.0	116.4	291.2	135.2
		3	127.0	67.3	51.0	27.5	69.6	30.6	109.6	221.2	116.4	290.7	(3)
		Avg.	126.6	67.2	49.5	27.4	69.7	30.4	109.8	221.1	115.4	289.0	135.9
0.063 VX0030AK	LT	1	129.7	65.0	50.0	28.8	71.6	30.2	109.3	220.8	114.3	288.5	134.5
		2	126.6	64.6	49.5	27.1	72.0	30.6	108.9	220.5	113.7	283.8	137.0
		3	126.6	64.7	50.0	28.9	72.0	30.4	110.2	220.8	115.6	286.8	131.0
		Avg.	127.6	64.8	49.8	28.3	71.9	30.4	109.5	220.7	114.5	286.4	134.2
0.063 NX15EBAK	L	1	133.3	73.1	46.0	28.2	74.8	30.3	111.2	227.5	114.5	301.0	144.1
		2	134.1	72.7	46.5	28.2	75.1	30.1	112.5	228.9	115.9	303.3	141.8
		3	133.7	72.7	45.5	28.9	74.9	30.2	112.6	228.5	117.5	308.3	140.7
		Avg.	133.7	72.8	46.0	28.4	74.9	30.2	112.1	228.3	115.9	304.2	142.2
0.063 NX15EBAK	LT	1	134.4	68.2	47.5	28.5	74.5	30.8	111.7	229.2	118.6	304.9	141.9
		2	134.4	70.3	47.0	27.7	75.0	30.7	112.0	229.6	118.2	295.9	134.4
		3	134.1	70.2	47.0	29.2	75.2	31.5	112.0	229.8	118.6	299.2	137.7
		Avg.	134.3	69.6	47.2	28.5	74.9	31.0	111.9	229.6	118.4	300.0	138.0
0.078 VX0028AK	L	1	132.9	71.9	46.5	29.5	75.6	30.2	140.8	230.2	111.8	299.0	136.1
		2	132.9	72.2	47.0	29.9	74.8	30.0	112.6	230.3	112.9	305.4	134.4
		3	132.8	71.3	47.5	30.4	77.0	30.4	113.1	229.8	112.8	301.4	133.8
		Avg.	132.9	71.8	47.0	29.9	75.8	30.2	122.2	230.1	112.5	301.9	134.8

Downloaded from http://www.everyspec.com

TABLE 10. (Continued)

Plate Thickness, inches	Grain Direction	Specimen No.	Tensile				Compressive		Shear	Bearing			
										e/D = 1.5		e/D = 2.0 (1)	
			Ultimate Strength, ksi	Yield Strength, ksi	Elongation, percent	Modulus, 10^3 ksi	Yield Strength, ksi	Modulus, 10^3 ksi	Ultimate Strength, ksi	Ultimate Strength, ksi	Yield Strength, ksi	Ultimate Strength, ksi	Yield Strength, ksi
0.078 VX0028AK	LT	1	136.7	70.9	45.5	29.4	75.4	30.6	113.4	229.8	(2)	299.7	140.3
		2	137.0	73.9	45.5	30.2	74.3	30.8	112.5	230.9	115.6	305.9	141.2
		3	137.0	74.0	45.5	28.6	75.0	31.3	112.5	230.4	117.0	301.7	137.5
		Avg.	136.9	72.9	45.5	29.4	74.9	30.9	112.8	230.4	116.3	302.4	139.7
0.078 VX0055AK	L	1	134.5	71.1	47.5	29.9	74.4	30.9	113.2	229.2	116.7	300.6	138.5
		2	133.8	71.2	46.5	31.3	74.4	30.6	113.6	230.0	118.3	294.9	137.0
		3	135.1	70.8	46.5	31.3	73.9	30.2	113.1	230.3	(2)	301.2	139.1
		Avg.	134.5	71.0	46.8	30.8	74.2	30.6	113.3	229.8	117.5	298.9	138.2
0.078 VX0055AK	LT	1	134.8	70.6	48.5	33.6	74.1	30.9	113.8	227.9	113.5	300.0	137.0
		2	133.8	70.7	47.5	29.4	74.3	31.1	112.4	227.5	114.7	299.5	138.2
		3	134.2	70.6	47.5	31.6	74.5	31.2	113.1	229.3	118.5	302.4	135.4
		Avg.	134.3	70.6	47.8	31.5	74.3	31.1	113.1	228.2	115.6	300.6	136.9
0.093 VX0041AK	L	1	138.4	74.0	45.5	30.6	72.2	29.2	153.4	231.5	113.7	302.1	143.1
		2	137.4	73.0	45.5	29.2	76.1	29.5	153.4	232.2	116.2	302.4	138.9
		3	137.1	73.7	45.0	29.1	76.2	29.9	115.2	225.3	97.8	304.1	149.0
		Avg.	137.6	73.6	45.3	29.6	74.8	29.5	140.7	229.7	109.2	302.9	143.7
0.093 VX0041AK	LT	1	136.6	75.0	47.5	30.8	77.3	30.8	113.6	231.4	115.6	306.7	142.5
		2	134.7	74.4	46.5	29.4	77.8	31.2	113.5	227.8	111.7	306.0	140.5
		3	134.9	74.3	47.5	30.3	77.7	31.3	114.8	229.8	113.5	304.9	141.9
		Avg.	135.4	74.6	47.2	30.2	77.6	31.1	114.0	229.7	113.6	305.9	141.6
0.125 VX0037AK	L	1	127.6	58.5	53.0	30.7	61.9	30.0	110.1	209.3	97.9	292.4	124.6
		2	126.7	59.7	52.0	31.4	62.2	30.4	113.8	210.0	100.4	290.0	122.7
		3	127.0	60.2	51.5	29.7	61.8	30.6	110.6	209.1	96.9	290.7	122.1
		Avg.	127.1	59.5	52.2	30.6	62.0	30.3	111.5	209.5	98.4	291.0	123.1
0.125 VX0037AK	LT	1	126.5	59.6	52.0	31.0	62.3	29.8	110.8	218.7	102.9	290.2	125.1
		2	126.9	59.8	51.5	30.8	62.5	30.0	110.7	221.2	105.8	292.7	124.7
		3	126.4	59.6	51.0	29.4	62.4	30.1	111.2	209.7	95.5	287.6	118.4
		Avg.	126.6	59.7	51.5	30.4	62.4	30.0	110.9	216.5	101.4	290.2	122.7

Downloaded from http://www.everyspec.com

TABLE 10. (Continued)

Plate Thickness, inches	Grain Direction	Specimen No.	Tensile				Compressive		Shear	Bearing			
										e/D = 1.5		e/D = 2.0 (1)	
			Ultimate Strength, ksi	Yield Strength, ksi	Elongation, percent	Modulus, 10^3 ksi	Yield Strength, ksi	Modulus, 10^3 ksi	Ultimate Strength, ksi	Ultimate Strength, ksi	Yield Strength, ksi	Ultimate Strength, ksi	Yield Strength, ksi
0.125 VX0056AK	L	1	135.7	71.3	47.0	29.0	73.4	30.6	115.0	227.8	101.0	304.8	125.5
		2	135.4	72.2	47.0	30.1	73.4	29.8	114.6	221.3	106.5	305.5	128.3
		3	135.2	71.1	47.0	30.8	73.5	30.1	115.1	222.2	94.1	304.7	124.2
		Avg.	135.4	71.5	47.0	30.0	73.4	30.2	114.9	223.8	100.5	305.0	126.0
0.125 VX0056AK	LT	1	134.3	71.4	47.5	31.5	74.5	30.2	113.6	231.0	104.3	308.5	131.3
		2	134.1	71.0	47.0	29.9	74.6	30.5	113.9	230.0	108.2	307.6	131.9
		3	134.1	71.7	48.0	30.9	74.7	31.0	130.6	226.9	103.1	309.0	137.9
		Avg.	134.2	71.4	47.5	30.8	74.6	30.6	113.8	229.3	105.2	308.4	133.7
0.187 VX0015AK	L	1	128.4	62.6	51.5	31.3	68.0	29.9	110.2	222.2	109.2	297.9	133.3
		2	129.7	65.7	51.5	27.1	67.7	29.5	109.4	223.1	109.1	294.8	128.2
		3	129.4	65.8	52.0	29.0	67.5	29.4	110.7	223.9	109.4	294.2	126.6
		Avg.	129.2	64.7	51.7	29.1	67.7	29.6	110.1	223.1	109.3	295.6	129.4
0.187 VX0015AK	LT	1	129.7	63.8	51.5	28.2	69.0	29.7	109.9	221.1	106.5	294.7	130.2
		2	129.6	64.1	50.0	30.1	69.4	29.6	109.6	215.9	105.5	290.0	125.4
		3	129.7	63.7	50.5	27.8	68.7	29.8	111.9	210.3	101.3	294.8	131.7
		Avg.	129.7	63.9	50.7	28.7	69.0	29.7	110.4	215.7	104.4	293.1	129.1
0.250 VX0069AK	L	1	128.9	62.5	53.5	28.6	66.2	29.4	109.8	226.3	98.4	297.0	131.7
		2	128.0	62.6	53.0	29.3	66.3	29.0	109.7	221.2	97.8	297.5	134.5
		3	128.1	63.3	53.0	27.4	65.9	28.5	108.8	222.7	102.1	296.9	131.7
		Avg.	128.3	62.8	53.2	28.4	66.1	29.0	109.4	223.4	99.4	297.1	132.6
0.250 VX0069AK	LT	1	128.6	63.8	52.5	28.7	67.5	29.5	110.2	221.2	105.0	295.1	137.3
		2	129.0	62.6	52.0	27.4	66.2	29.5	107.6	215.1	103.2	294.0	132.7
		3	128.2	63.2	52.0	28.7	68.8	29.9	110.1	222.6	95.7	294.3	131.5
		Avg.	128.6	63.2	52.2	28.3	67.5	29.6	109.3	219.6	101.3	294.5	133.8

(1) Specimen numbers for e/D = 2.0 were 4 through 6.
(2) Uncharacteristic load-deformation curve.
(3) X-Y plotter problem.

Downloaded from http://www.everyspec.com

TABLE 10(a). MECHANICAL PROPERTIES OF ANNEALED INCONEL 625 SHEET

Plate Thickness, mm	Grain Direction	Specimen No.	Tensile				Compressive		Shear	Bearing (1)			
										e/D = 1.5		e/D = 2.0	
			Ultimate Strength, MPa	Yield Strength, MPa	Elongation, percent	Modulus, GPa	Yield Strength, MPa	Modulus, MPa	Ultimate Strength, GPa	Ultimate Strength, MPa	Yield Strength, MPa	Ultimate Strength, MPa	Yield Strength, MPa
1.27 VX0070AK	L	1	953.6	515.1	44.5	196.5	527.5	206.2	784.4	1610.4	820.4	1808.9	1047.2
		2	957.0	524.0	44.0	199.3	530.9	206.9	805.0	1609.7	823.4	2039.3	1014.4
		3	940.5	478.5	45.5	196.5	527.5	209.6	789.7	1627.6	829.7	1988.9	(2)
		Avg.	950.4	505.9	44.7	197.4	528.6	207.5	793.0	1615.9	824.5	1945.7	1030.8
1.27 VX0070AK	LT	1	937.0	513.0	44.5	197.2	544.0	214.4	803.4	1608.4	845.9	1889.3	1004.2
		2	932.9	517.1	45.0	193.7	546.8	215.8	775.5	1606.8	806.9	1960.3	1010.4
		3	934.3	513.0	46.0	197.2	548.2	215.8	775.5	1512.9	795.8	1903.7	971.6
		Avg.	934.7	514.4	45.2	196.0	546.3	215.4	784.8	1576.1	816.2	1917.8	995.4
1.60 VX0030AK	L	1	867.4	462.7	48.5	181.3	480.6	211.0	759.8	1523.2	782.5	1965.8	942.2
		2	875.7	464.0	49.0	195.1	481.3	206.9	756.5	1524.0	802.7	2008.1	932.4
		3	875.7	464.0	51.0	189.6	479.9	211.0	755.5	1525.2	802.6	2004.3	(3)
		Avg.	872.9	463.6	49.5	188.7	480.6	209.6	757.3	1524.1	795.9	1992.7	937.3
1.60 VX0030AK	LT	1	894.3	448.2	50.0	198.6	495.1	208.2	753.7	1522.2	788.0	1989.3	927.6
		2	872.9	445.4	49.5	186.9	496.4	211.0	751.1	1520.2	783.7	1956.5	944.8
		3	872.9	446.1	50.0	199.3	496.4	209.6	759.9	1522.1	796.8	1977.5	903.5
		Avg.	880.0	446.6	49.8	194.9	496.0	209.6	754.9	1521.5	789.5	1974.5	925.3
1.60 MX15EBAK	L	1	919.1	504.0	46.0	194.4	515.7	208.9	766.5	1568.4	789.2	2075.5	993.6
		2	924.6	501.3	46.5	194.4	517.8	207.5	776.0	1578.1	798.8	2091.5	977.8
		3	921.9	501.3	45.5	199.3	516.4	208.2	776.4	1575.4	810.2	2125.8	970.4
		Avg.	921.9	502.2	46.0	196.0	516.7	208.2	773.0	1574.0	799.4	2097.6	980.6
1.60 MX15EBAK	LT	1	926.7	470.2	47.5	196.5	513.7	212.4	770.2	1580.7	817.5	2102.0	978.7
		2	926.7	484.7	47.0	191.0	517.1	211.7	772.5	1582.9	814.8	2040.1	926.8
		3	924.6	484.0	47.0	201.3	518.5	217.2	772.5	1584.8	817.8	2063.0	949.5
		Avg.	926.0	479.7	47.2	196.3	516.4	213.7	771.7	1582.8	816.7	2068.4	951.7
1.98 VX0028AK	L	1	916.3	495.8	46.5	203.4	521.3	208.2	970.8	1587.1	771.0	2061.8	938.6
		2	916.3	497.8	47.0	206.2	515.7	206.9	776.4	1588.0	778.4	2105.6	926.5
		3	915.7	491.6	47.5	209.6	530.9	209.6	779.8	1584.5	777.9	2077.9	922.3
		Avg.	916.1	495.1	47.0	206.4	522.6	208.2	842.3	1586.5	775.7	2081.7	929.2

Downloaded from http://www.everyspec.com

TABLE 10(a). (Continued)

Plate Thickness, mm	Grain Direction	Specimen No.	Tensile				Compressive		Shear	Bearing			
										e/D = 1.5		e/D = 2.0 (1)	
			Ultimate Strength, MPa	Yield Strength, MPa	Elongation, percent	Modulus, GPa	Yield Strength, MPa	Modulus, MPa	Ultimate Strength, GPa	Ultimate Strength, MPa	Yield Strength, MPa	Ultimate Strength, MPa	Yield Strength, MPa
1.98 VX0028AK	LT	1	942.5	488.9	45.5	202.7	519.9	211.0	782.0	1584.4	(2)	2066.1	967.2
		2	944.6	509.5	45.5	208.2	512.3	212.4	775.8	1592.0	796.9	2109.3	973.9
		3	944.6	510.2	45.5	197.2	517.1	215.8	775.7	1588.7	806.4	2080.2	948.2
		Avg.	943.9	502.9	45.5	202.7	516.4	213.1	777.8	1588.4	801.6	2085.2	963.1
1.98 VX0055AK	L	1	927.4	490.2	47.5	205.5	513.0	213.1	780.3	1580.2	804.7	2072.9	954.6
		2	922.6	490.9	46.5	215.8	513.0	211.0	783.3	1585.8	815.7	2033.6	944.6
		3	931.5	488.2	46.5	215.8	509.5	208.2	779.7	1588.0	(2)	2077.1	958.8
		Avg.	927.1	489.8	46.8	212.4	511.8	210.8	781.1	1584.7	810.2	2061.2	952.7
1.98 VX0055AK	LT	1	929.4	486.8	48.5	231.7	510.9	213.1	784.7	1571.6	782.3	2068.3	944.7
		2	922.6	487.5	47.5	202.7	512.3	214.4	774.7	1568.8	791.0	2065.3	952.9
		3	925.3	486.8	47.5	217.9	513.7	215.1	780.1	1580.7	817.1	2085.0	933.5
		Avg.	925.8	487.0	47.8	217.4	512.3	214.2	779.8	1573.7	796.8	2072.9	943.7
2.36 VX0041AK	L	1	954.3	510.2	45.5	211.0	497.8	201.3	1057.7	1596.1	783.8	2082.8	986.7
		2	947.4	503.3	45.5	201.3	524.7	203.4	1057.7	1601.3	801.2	2085.3	957.6
		3	945.3	508.2	45.0	200.6	525.4	206.2	794.0	1553.7	674.6	2096.7	1027.4
		Avg.	949.0	507.2	45.3	204.3	516.0	203.6	969.8	1583.7	753.2	2088.2	990.6
2.36 VX0041AK	LT	1	941.9	517.1	47.5	212.4	533.0	212.4	783.1	1595.5	797.3	2114.4	982.7
		2	928.8	513.0	46.5	202.7	536.4	215.1	782.9	1570.3	770.2	2110.2	968.7
		3	930.1	512.3	47.5	208.9	535.7	215.8	791.3	1584.6	782.5	2102.0	978.1
		Avg.	933.6	514.1	47.2	208.0	535.1	214.4	785.7	1583.5	783.3	2108.8	976.5
3.175 VX0037AK	L	1	879.8	403.4	53.0	211.7	426.8	206.9	759.3	1443.0	675.0	2016.0	859.1
		2	873.6	411.6	52.0	216.5	428.9	209.6	784.7	1447.8	692.3	1999.3	846.3
		3	875.7	415.1	51.5	204.8	426.1	211.0	762.7	1441.8	667.8	2004.2	841.6
		Avg.	876.4	410.0	52.2	211.0	427.3	209.1	768.9	1444.2	678.4	2006.5	849.0
3.175 VX0037AK	LT	1	872.2	410.9	52.0	213.7	429.6	205.5	764.0	1507.8	709.2	2001.2	862.6
		2	875.0	412.3	51.5	212.4	430.9	206.9	763.2	1524.9	729.4	2018.0	859.7
		3	871.5	410.9	51.0	202.7	430.2	207.5	766.7	1445.8	658.7	1982.9	816.3
		Avg.	872.9	411.4	51.5	209.6	430.2	206.6	764.7	1492.8	699.1	2000.7	846.2

Downloaded from http://www.everyspec.com

TABLE 10(a). (Continued)

Plate Thickness, mm	Grain Direction	Specimen No.	Tensile				Compressive		Shear	Bearing (1)			
										e/D = 1.5		e/D = 2.0	
			Ultimate Strength, MPa	Yield Strength, MPa	Elongation, percent	Modulus, GPa	Yield Strength, MPa	Modulus, MPa	Ultimate Strength, GPa	Ultimate Strength, MPa	Yield Strength, MPa	Ultimate Strength, MPa	Yield Strength, MPa
3.175 VX0056AK	L	1	935.7	491.6	47.0	200.0	506.1	211.0	792.9	1570.5	696.1	2101.9	865.5
		2	933.6	497.8	47.0	207.5	506.1	205.5	790.2	1526.2	734.4	2106.4	884.6
		3	932.2	490.2	47.0	212.4	506.8	207.5	793.8	1532.1	648.6	2101.0	856.2
		Avg.	933.8	493.2	47.0	206.6	506.3	208.0	792.3	1542.9	693.0	2103.1	868.8
3.175 VX0056AK	LT	1	926.0	492.3	47.5	217.2	513.7	208.2	783.3	1592.6	719.3	2127.4	905.6
		2	924.6	489.5	47.0	206.2	514.4	210.3	785.3	1585.8	746.4	2121.1	909.5
		3	924.6	494.4	48.0	213.1	515.1	213.7	900.3	1564.3	710.6	2130.4	951.0
		Avg.	925.1	492.1	47.5	212.1	514.4	210.8	823.0	1580.9	725.4	2126.3	922.0
4.75 VX0015AK	L	1	895.3	431.6	51.5	215.8	468.9	206.2	759.8	1532.2	753.2	2053.7	919.2
		2	894.3	453.0	51.5	186.9	466.8	203.4	754.4	1538.0	752.6	2032.9	884.2
		3	892.2	453.7	52.0	200.0	465.4	202.7	763.1	1544.0	754.6	2028.4	872.7
		Avg.	890.6	446.1	51.7	200.9	467.0	204.1	759.1	1538.1	753.5	2038.4	892.0
4.75 VX0015AK	LT	1	894.3	439.9	51.5	194.4	475.8	204.8	757.8	1524.3	734.0	2031.9	897.4
		2	893.6	442.1	50.0	207.5	478.5	204.1	755.3	1488.4	727.6	1999.3	864.8
		3	894.3	439.2	50.5	191.7	473.7	205.5	771.3	1450.1	698.7	2032.5	907.9
		Avg.	894.1	440.4	50.7	197.9	476.0	204.8	761.5	1487.6	720.1	2021.2	890.0
6.35 VX0069AK	L	1	888.8	430.9	53.5	197.2	456.4	202.7	757.0	1560.4	678.8	2048.1	908.0
		2	882.6	431.6	53.0	202.0	457.1	200.0	756.5	1524.9	674.4	2051.3	927.7
		3	883.2	436.5	53.0	188.9	454.4	196.5	750.5	1535.7	703.9	2046.8	908.2
		Avg.	884.9	433.0	53.2	196.0	456.0	199.7	754.6	1540.3	685.7	2048.7	914.6
6.35 VX0069AK	LT	1	886.7	439.9	52.5	197.9	465.4	203.4	759.6	1524.9	723.9	2034.4	946.5
		2	889.5	431.6	52.0	188.9	456.4	203.4	742.0	1483.0	711.4	2027.1	914.8
		3	883.9	435.8	52.0	197.9	474.6	206.2	759.4	1534.9	659.5	2029.3	906.4
		Avg.	886.7	435.8	52.2	194.9	465.4	204.3	753.7	1514.3	698.3	2030.3	922.6

(1) Specimen numbers for e/D = 2.0 were 4 through 6.
(2) Uncharacteristic load-deformation curve.
(3) X-Y plotter problem.

Downloaded from http://www.everyspec.com

Downloaded from http://www.everyspec.com

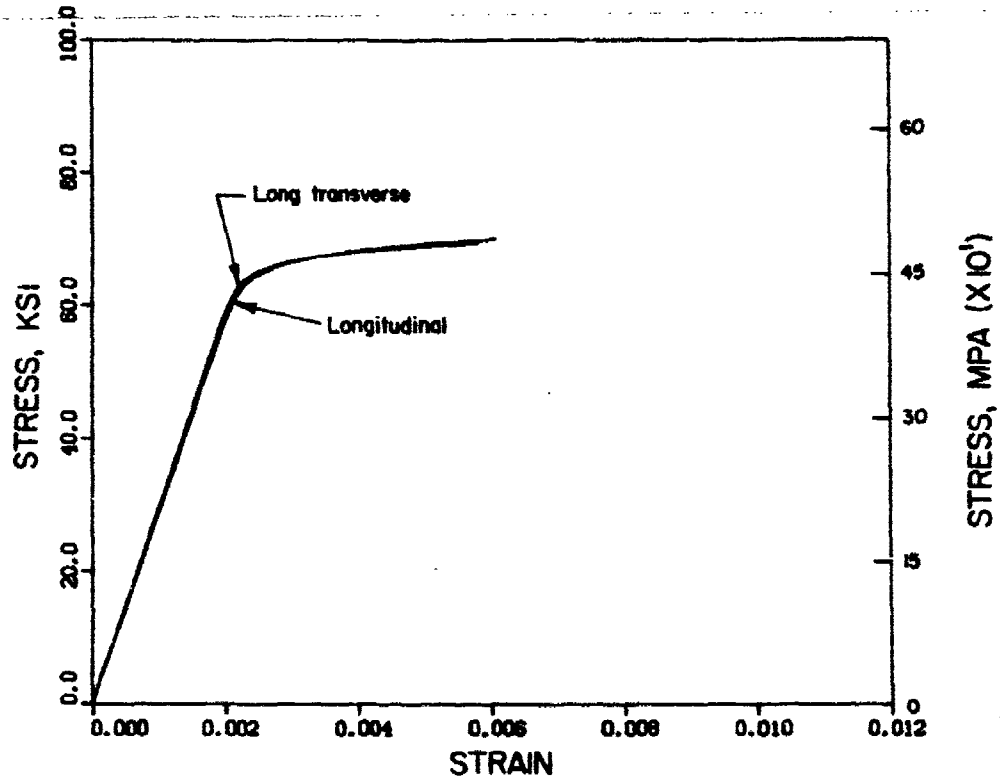

Figure 21. Typical tensile stress-strain curves for annealed Inconel 625 sheet.

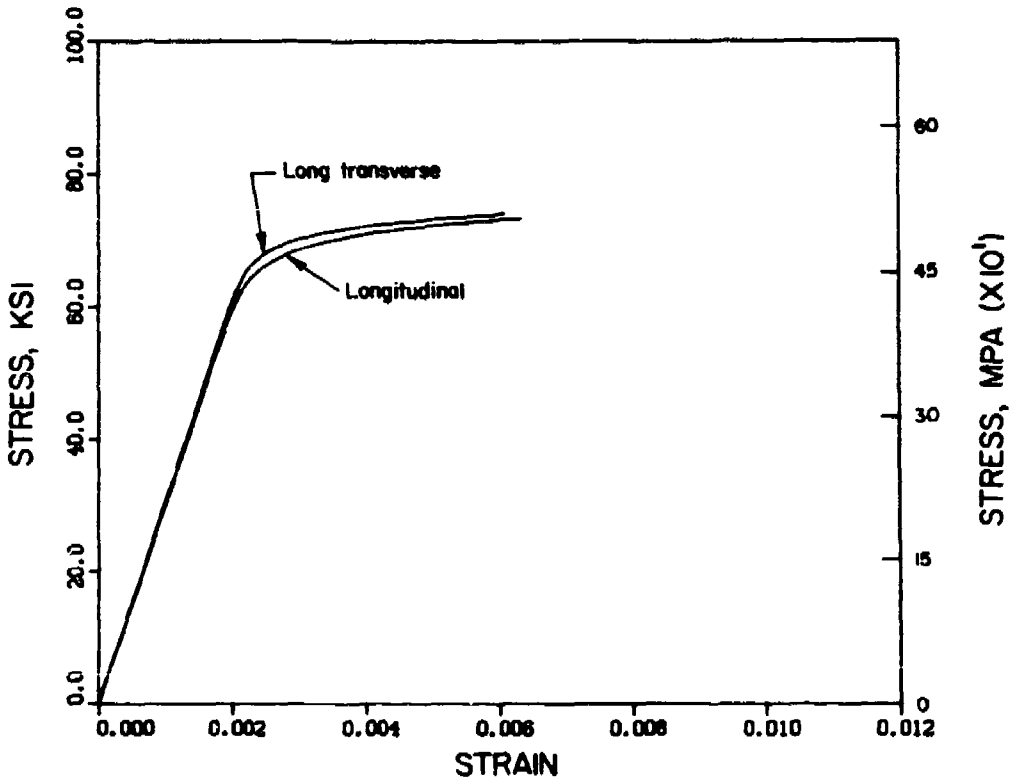

Figure 22. Typical compressive stress-strain curves for annealed Inconel 625 sheet.

Downloaded from http://www.everyspec.com

TABLE 11. UNNOTCHED FATIGUE DATA FOR ANNEALED INCONEL 625 SHEET--LONG TRANSVERSE DIRECTION

Specimen ID	Maximum Stress, ksi	MPa	R-ratio	Cycles to Failure	
0FT17	120.0	(827.4)	-0.5	---	(1)
0FT3	120.0	(827.4)	-0.5	7,170	
0FT59	120.0	(827.4)	-0.5	8,230	
0FT11	100.0	(689.5)	-0.5	47,860	
0FT5	90.0	(620.6)	-0.5	47,590	
0FT9	90.0	(620.6)	-0.5	87,020	
0FT19	80.0	(551.6)	-0.5	138,220	
0FT7	80.0	(551.6)	-0.5	848,150	
0FT15	75.0	(517.1)	-0.5	3,034,310	
0FT13	70.0	(482.7)	-0.5	DNF	(2)
0FT1	50.0	(344.8)	-0.5	DNF	
0FT31	140.0	(965.3)	0.1	800	(3)
0FT33	130.0	(896.4)	0.1	30,430	
0FT25	120.0	(827.4)	0.1	47,820	
0FT27	100.0	(689.5)	0.1	137,460	
0FT23	90.0	(620.6)	0.1	239,350	
0FT21	85.0	(586.1)	0.1	455,180	
0FT35	80.0	(551.6)	0.1	518,180	
0FT39	70.0	(482.7)	0.1	DNF	
0FT37	70.0	(482.7)	0.1	---	
0FT29	50.0	(344.8)	0.1	DNF	
0FT53	134.0	(923.9)	0.5	123,150	
0FT51	130.0	(896.4)	0.5	251,300	
0FT49	130.0	(896.4)	0.5	295,760	
0FT57	125.0	(861.9)	0.5	278,210	
0FT47	120.0	(827.4)	0.5	627,230	
0FT55	118.0	(813.6)	0.5	DNF	
0FT45	110.0	(758.5)	0.5	DNF	
0FT43	90.0	(620.6)	0.5	DNF	
0FT41	50.0	(344.8)	0.5	DNF	

(1) Specimen failed on loading.

(2) DNF - did not fail; test ran 10,000,000 cycles and stopped.

(3) Cycle count below 10^3; not plotted.

Downloaded from http://www.everyspec.com

TABLE 12. NOTCHED, N_t = 3, FATIGUE DATA FOR ANNEALED INCONEL 625 SHEET--LONG TRANSVERSE DIRECTION

Specimen ID	Maximum Stress, ksi	MPa	R-ratio	Cycles to Failure
OFT2	80.0	(551.6)	-0.5	3,410
OFT14	70.0	(482.7)	-0.5	8,450
OFT4	60.0	(413.7)	-0.5	14,960
OFT12	50.0	(344.8)	-0.5	28,110 (1)
OFT16	40.0	(275.8)	-0.5	74,690
OFT6	40.0	(275.8)	-0.5	76,670
OFT10	30.0	(206.9)	-0.5	293,490
OFT18	30.0	(206.9)	-0.5	1,649,560
OFT20	25.0	(172.4)	-0.5	DNF (2)
OFT8	20.0	(137.9)	-0.5	DNF
OFT32	120.0	(827.4)	0.1	3,290
OFT26	100.0	(689.5)	0.1	6,510
OFT24	80.0	(551.6)	0.1	18,450
OFT40	80.0	(551.6)	0.1	18,890
OFT22	60.0	(413.7)	0.1	82,360
OFT34	60.0	(413.7)	0.1	157,080
OFT28	40.0	(275.8)	0.1	474,770
OFT36	40.0	(275.8)	0.1	759,780
OFT38	35.0	(241.3)	0.1	DNF
OFT30	30.0	(206.9)	0.1	DNF
OFT54	130.0	(896.4)	0.5	8,090
OFT44	120.0	(827.4)	0.5	15,780
OFT46	110.0	(758.5)	0.5	21,520
OFT42	100.0	(689.5)	0.5	--- (3)
OFT48	100.0	(689.5)	0.5	29,940
OFT50	90.0	(620.6)	0.5	40,330
OFT52	80.0	(551.6)	0.5	120,890
OFT56	70.0	(482.7)	0.5	351,660
OFT60	60.0	(413.7)	0.5	1,051,090
OFT58	50.0	(344.8)	0.5	DNF

(1) Failed in grips.

(2) DNF - did not fail; test ran 10,000,000 cycles and stopped.

(3) Setup error.

Downloaded from http://www.everyspec.com

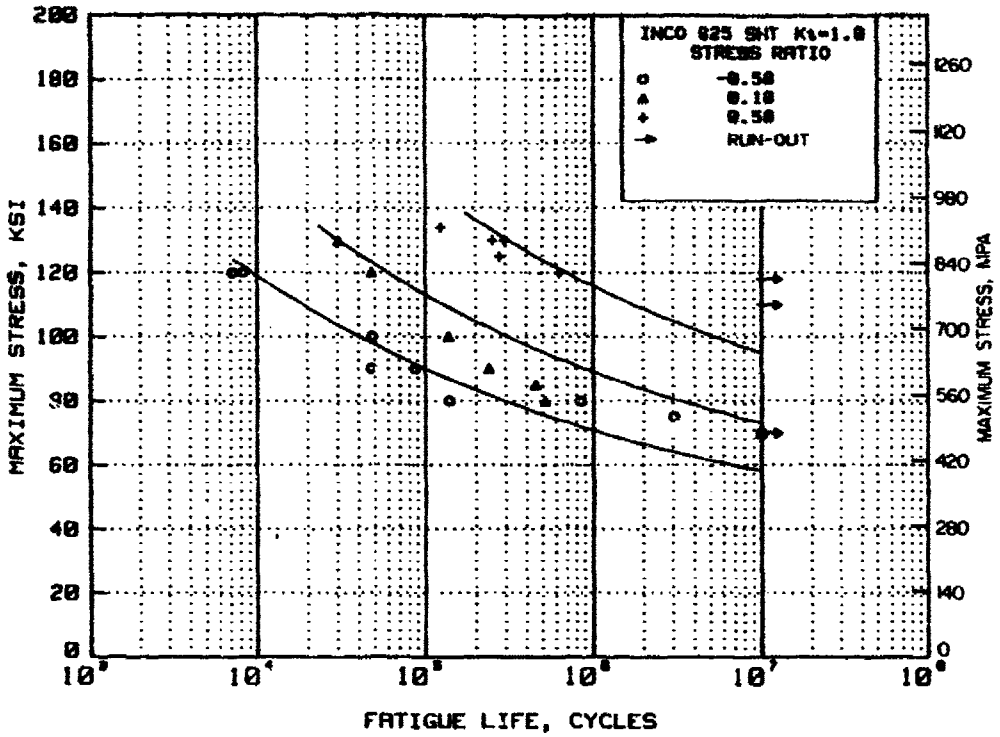

Figure 23. Unnotched axial-stress S/N curves for 0.093-inch-thick, annealed Inconel 625 sheet--long transverse direction.

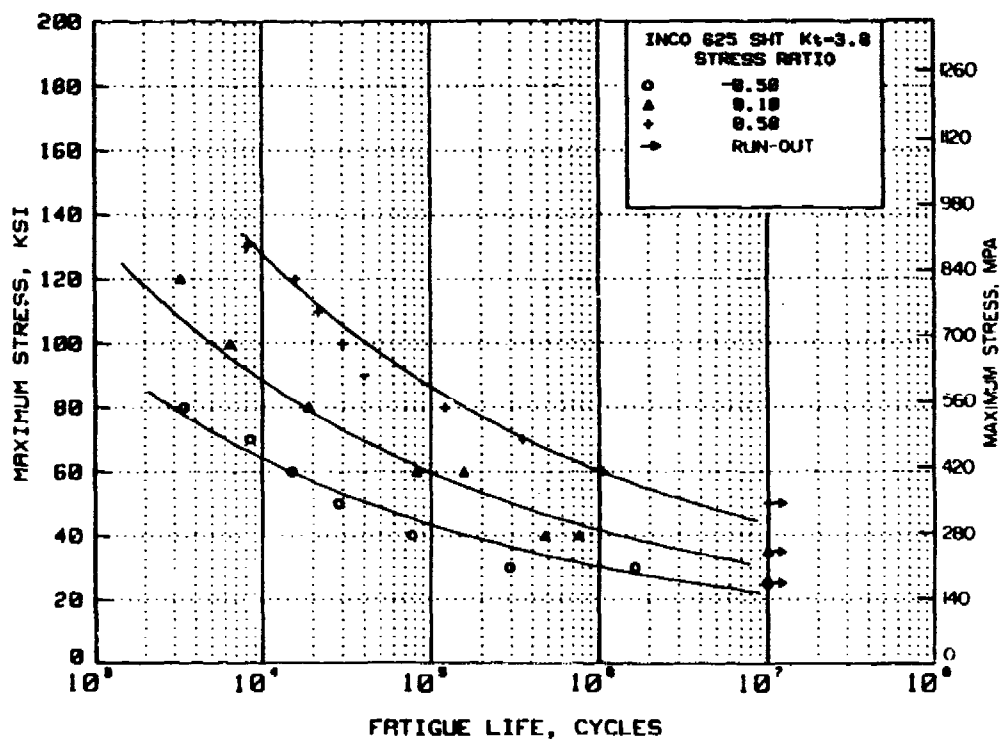

Figure 24. Notched axial-stress S/N curves for 0.093-inch-thick, annealed Inconel 625 sheet--long transverse direction.

Downloaded from http://www.everyspec.com

TESTING PROCEDURES

Tension Tests. Tension tests were performed at room temperature in accord with ASTM E8. Flat specimens were utilized for sheet, while round specimens were employed for bar. Subsize round specimens were used, as necessary, when the size of the product would not accommodate full-size specimens. The strain rate was 0.005-inch-per-inch-per-minute, as indicated by a strain pacer, until yield strength was exceeded, after which the rate was increased to 0.1-inch-per-inch-per-minute until failure. The tensile yield strength at 0.2 percent offset, tensile ultimate strength, elongation, and the tensile modulus of elasticity were obtained from this test.

Compression Tests. Compression tests were performed at room temperature in accord with ASTM E9. Cylindrical specimens were used for bar. The ends of the cylindrical specimens were parallel to 0.0002 inch, and fixturing was used to maintain alignment during testing. For sheet, flat specimens were utilized and tested in a "North American-type" compression fixture. This fixture will accommodate sheet specimens 1 by 3 inches and up to about 1/4-inch thick. The ends of the specimens were parallel to within 0.0002 inch. An extensometer, similar to the extension type, was fastened to the specimen at very small notches spanning a 2-inch gage length. The strain signal was generated by a linear differential transformer which was part of the extensometer with readout on an autographic recorder. For all tests, the strain rate was 0.005-inch-per-inch-per-minute until yield strength was exceeded. The compressive yield strength at 0.2-percent offset and the compressive modulus of elasticity were obtained from this test.

Shear Tests. Shear tests were conducted at room temperature. For sheet material, the tension-shear specimen, as specified in Standard Test Procedure ARTC-13-S-1, was used. For bar, a 0.250-inch-diameter, double-shear specimen was used. A rivet-shear type fixture was used to test pin-shear specimens from bar. The ultimate shear strength at room temperature was measured.

Downloaded from http://www.everyspec.com

Bearing Tests. Bearing tests were conducted at room temperature in accord with ASTM E238. Bearing specimens were full thickness except for products over 0.100-inch thickness, for which the bearing specimens were machined to 0.100-inch thick. All tests were "clean pin" tests as, defined in the above specification. The ultimate bearing strength and bearing yield strength at e/D ratios of 1.5 and 2.0 were measured. (The ratio of the distance between the centerline of the test hole in the bearing specimen and the edge of the specimen (e) to the diameter of the bearing hole (D) defines e/D.)

Fatigue Tests. Fatigue tests were conducted at room temperature in accord with ASTM E466. Axial-stress tests were performed on unnotched and notched specimens to define an S/N curve between 10^3 and 10^7 cycles. Tests were conducted in the long transverse direction for sheet and longitudinal direction for bar. Tests were conducted on smooth, $K_t = 1$, and notched, $K_t = 3$, specimens at three stress ratios.

Downloaded from http://www.everyspec.com

APPENDIX B

SPECIMEN CONFIGURATIONS

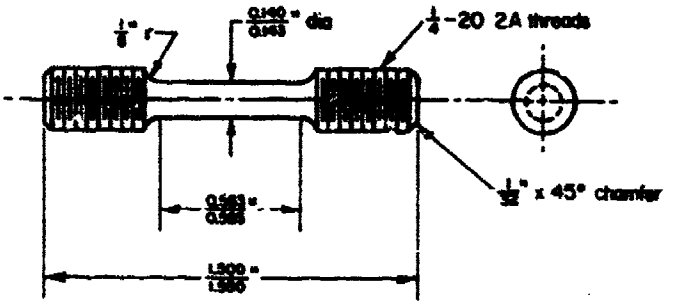

Figure B-1. Tensile specimen (short transverse direction) for 2- and 2-1/4-inch diameter Inconel 718 and Inconel 625 bars. Drawing 8T.

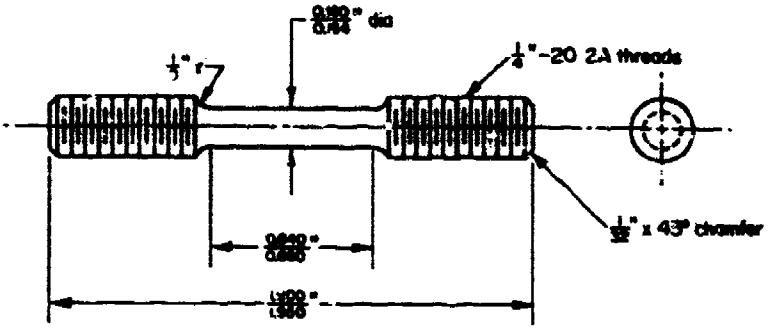

Figure B-2. Tensile specimen (short transverse direction) for 2-1/2-, 2-3/4-, and 3-inch diameter Inconel 718 and Inconel 625 bars. Drawing 10T.

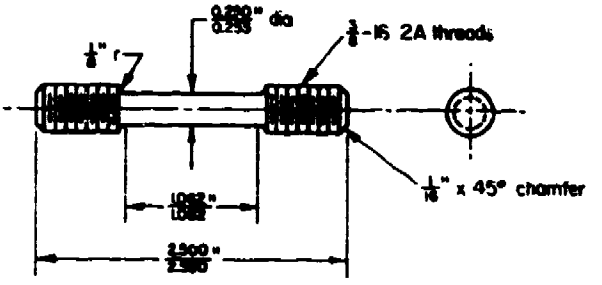

Figure B-3. Tensile specimen (short transverse direction for 3-1/4-, 3-1/2-, 3-3/4-, and 4-inch diameter and longitudinal direction for all diameters) for Inconel 718 and Inconel 625 bars. Drawing 9T.

Downloaded from http://www.everyspec.com

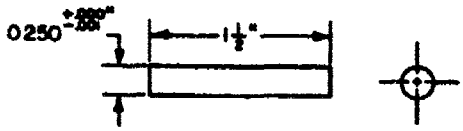

Figure B-4. Shear specimen for Inconel 718 and Inconel 625 bars. Drawing 3S.

Note: Ends of specimen shall be plane and perpendicular to the axis of specimen within 0.25 degrees. Ends shall be parallel within 0.0002".

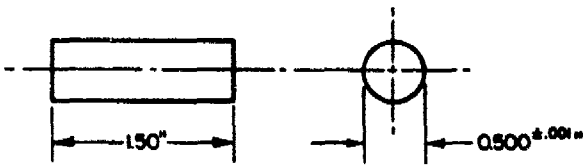

Figure B-5. Compression specimen for Inconel 718 and Inconel 625 bars. Drawing 3Co.

Note: Ends of specimen shall be plane and perpendicular to the axis of specimen within 0.25 degrees. Ends shall be parallel within 0.0002".

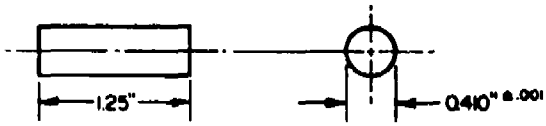

Figure B-6. Subsize compression specimen (short transverse for 2-inch-diameter) for Inconel 718 and Inconel 625 bars. Drawing 4Co.

Downloaded from http://www.everyspec.com

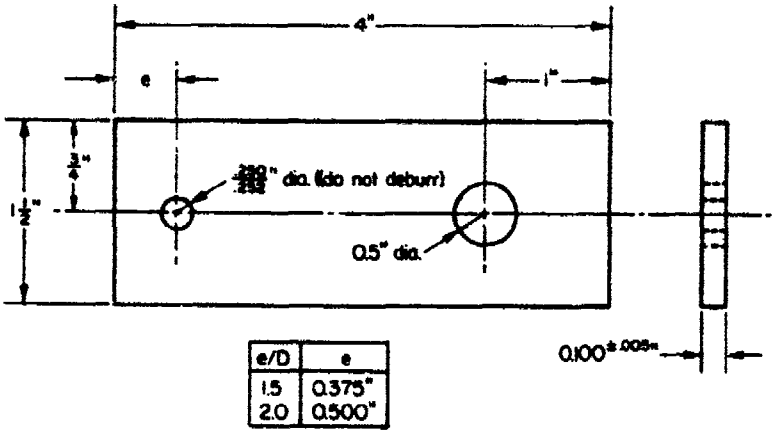

e/D	e
1.5	0.375"
2.0	0.500"

Figure B-7. Bearing specimen for Inconel 718 and Inconel 625 bars.

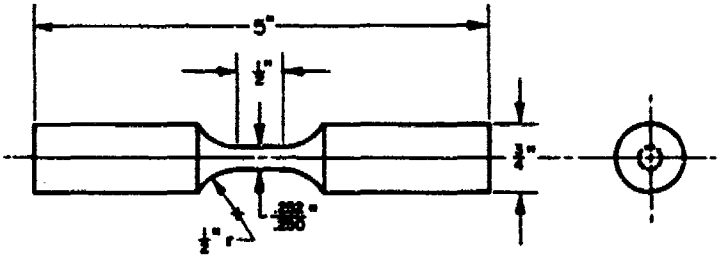

Figure B-8. Unnotched fatigue specimen for Inconel 718 and Inconel 625 bars.

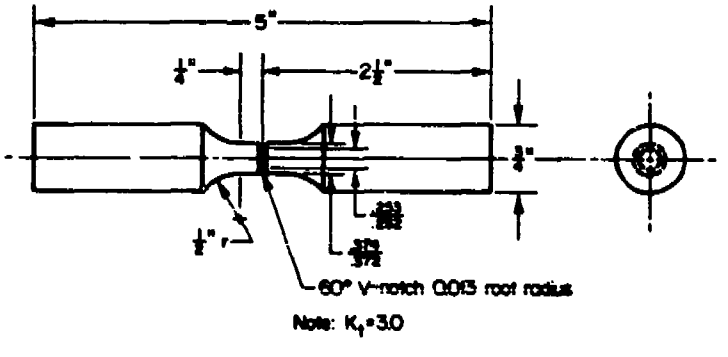

Figure B-9. Notched, K_t = 3, fatigue specimen for Inconel 718 and Inconel 625 bars.

Downloaded from http://www.everyspec.com

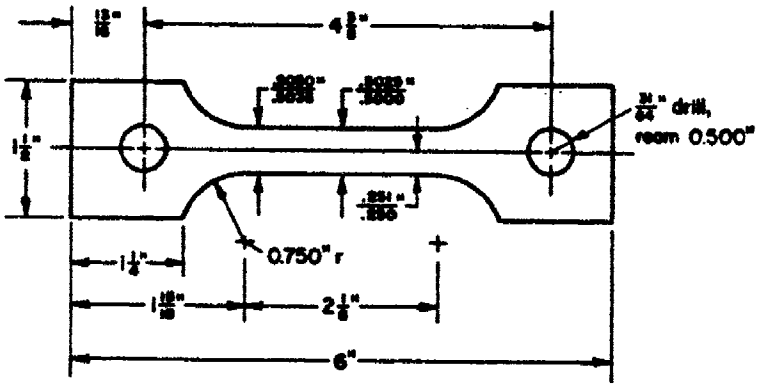

Figure B-10. Tensile specimen for Inconel 625 sheet.

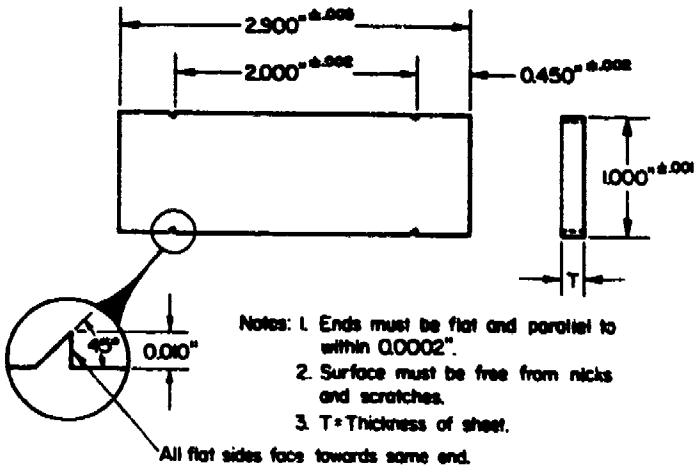

Figure B-11. Compression specimen for Inconel 625 sheet.

Downloaded from http://www.everyspec.com

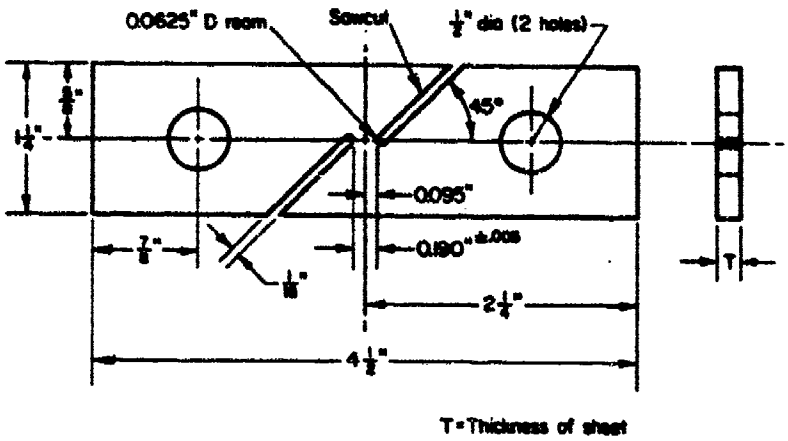

Figure B-12. Tension-shear specimen for Inconel 625 sheet.

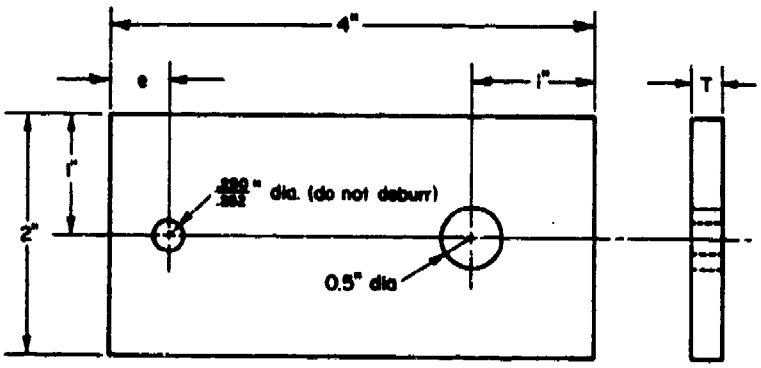

e/D	e
1.5	0.375"
2.0	0.500"

T = Thickness of sheet

Figure B-13. Bearing specimen for Inconel 625 sheet.

Downloaded from http://www.everyspec.com

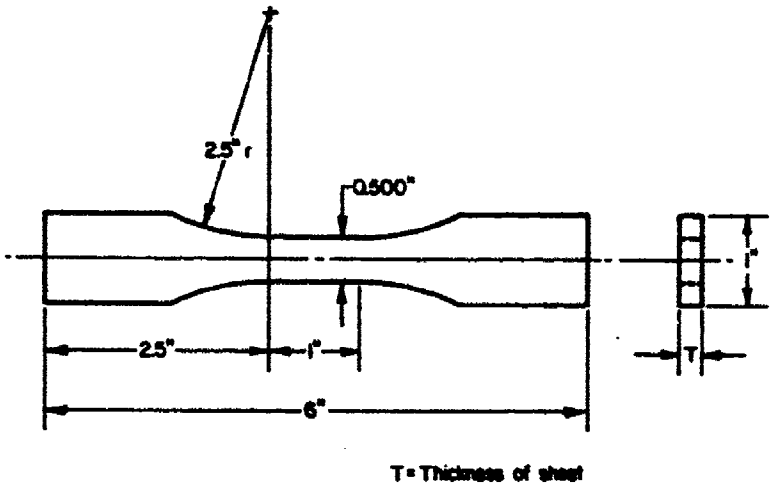

Figure B-14. Unnotched fatigue specimen for Inconel 625 sheet.

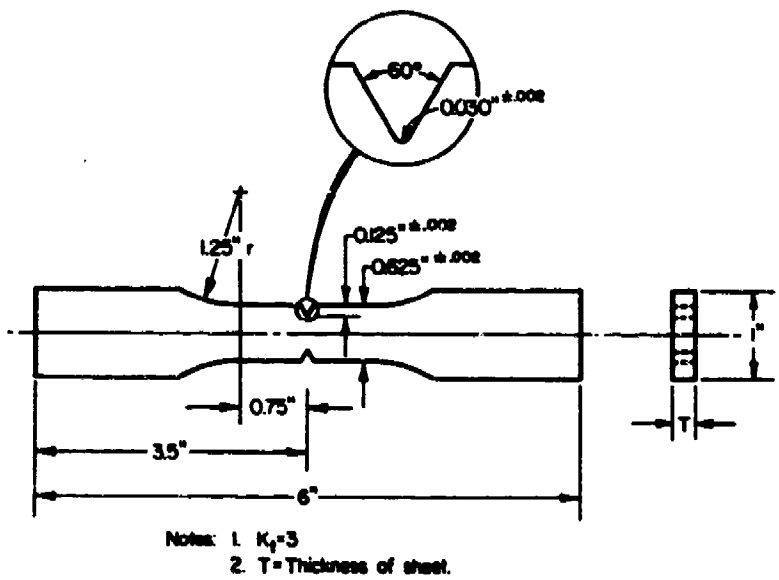

Figure B-15. Notched fatigue specimen for Inconel 625 sheet.

☆U.S.Government Printing Office: 1987 -- 748-061/60608