NASA TECHNICAL STANDARD	**NASA-STD 8739.4A**
National Aeronautics and Space Administration Washington, DC 20546	Approved: 2016-06-30 Superseding NASA-STD-8739.4 With Change 6

WORKMANSHIP STANDARD FOR CRIMPING, INTERCONNECTING CABLES, HARNESSES, AND WIRING

Measurement System Identification:
Metric (English)

DOCUMENT HISTORY LOG

Status	Document Revision	Approval Date	Description
Baseline		1998-02-08	Initial Release
Change	1	2006-01-27	- Page iii: Update URL for accessing NASA Technical Standards. The correct URL is http://standards.nasa.gov/ - Page iii: Update references to NASA 5300.4(3J-1) and NASA 5300.4(3M) to NASA-STD- 8739.1 and NASA-STD-8739.2 respectively. - Page iv: Insert Revisions page and renumber Table of Contents accordingly. - Para 2.1 Change citation for NHB 8060.1 to NASA-STD-6001 and change citation for NHB 1700.1(V1) to NPR 8715.3. - Para 3.2 Delete NHB from Acronym List and Add NPR to acronym list - Para 4.3 No. 4: Change sentence to "Crimping. Stranded wire shall be used for crimping. Crimping of solid wire is prohibited. Crimping of solder tinned stranded wire is prohibited." - Para 5.7: Change address for training center to: GSFC, Training Center, Code 300.1, 7000 Columbia Gateway Dr., Columbia, MD. 21046 - Para 6.8: Change sentence to read: "All materials used in vacuum or low pressure shall not release greater than 1.0 percent total mass loss (TML) and 0.1 percent collected volatile condensable material (CVCM) when tested in accordance with ASTM-E-595." - Para 6.8: Change NHB 8060.1" to "NASA-STD-6001" in the second sentence. - Para 7.3 No. 11 Change NHB 8060.1 to NASA-STD-6001 - Para 9.7: Change tape "may be applied to bundle" to "shall be applied to bundle". - Para 14.1 Change NHB 1700.1 to NPR 8715.3 - Para 18.2 No. 6.c: For the Insulation Resistance (IR) Test, change "for a minimum of 1 minute, or as specified in the test procedure" to "until a stabilized reading is attained not to exceed 1 minute, or as specified in the test procedure." - Appendix C Update the address for submitting changes to NASA Technical Standards *(WHBIII)*

Status	Document Revision	Approval Date	Description
Change	2	2006-08-23	- Page v: Insert Revisions page entries - Page ix: Revise Table of Contents to reflect insertion of new Chapter 19 and renumbering of existing Chapter 19 to Chapter 20 - Page xi and xii: Revise list of Figures to reflect insertion of new figures as a part of the new Chapter 19 - Page xii: Revise List of Tables to reflect insertion of new tables as a part of the new Chapter 19 - Pages 19-1 through 19-14: Inserted new Chapter on Splicing - Pages 20-1 through 20-10: Renumbered original Quality Assurance Provisions Chapter to accommodate the new Splicing Chapter *(WHBIII)*
Change	3	2006-09-05	Correct page number formatting problem and add page numbers (no content changes) *(WBHIII)*
Change	4	2008-07-25	Update references, add 'requirement' tags, and revalidate *(JWL4)*
Change	5	2009-11-24	Editorial corrections to paragraphs 6.4, 12.3.4.c, 13.7.3, 18.2.6.b, and footnote #1 to Table 12-1. Addition of SMA TA note on cover and VCS note below. *(JWL4)*
Change	6	2011-03-29	Editorial corrections to Foreword and paragraphs 9.5 and 15.1. Format Page numbers. Add reference to NASA-STD 8709.22 in paragraphs 2.1.2 and 3.2. *(JWL4)*
Revision	A	2016-06-30	- Editorial corrections to adopt current NASA Standard format. - Synchronized requirements with NASA-STD-8739.6 - Added and removed documents from reference lists. - Unused acronyms deleted. - Corrected applicability statement. - Supersede the training chapter with the current requirements found in NASA-STD-8739.6. - Update definitions for Accessory, Connector and Backshell. - Defer to NASA-STD 8709.22 for definitions for Repair and Rework.

Status	Document Revision	Approval Date	Description
			- Remove definitions for Solder Cup Terminal and Tab Terminal. - Defined high voltage applications as those supporting voltage in excess of 200VAC$_{RMS}$ or 300VDC. - Removed requirement for magnetic survey for uses of high strength copper alloy wire. - Added a requirement to specify wire dress and lay in drawings. - Include launch vehicles in applications where spiral wrapped sleeving is prohibited. - Remove contradictory rules regarding pull test failures. - Remove ambiguous, duplicate information from Table 12-1 for crimp pull acceptance criteria. - Remove requirements related to crimp process development and include only pre-production process verification pull testing requirements. - Require that instructions are provided to operators when outgassing connector subcomponents (e.g. grommets and gaskets) are to be removed during cable assembly. - Synchronized requirements with adoption of J-STD-001FS - Remove requirement to record break type for passing crimp test samples for contacts and crimp ring quality control testing. - Remove limitation of requirement to inspect captured solder cup interconnects to hermetic connector and extend it to all connectors with captured solder cup contacts. - Require process controls to ensure full solder fill of solder contacts. - Defer to engineering documentation for required torque values. - Added requirement to bake expanded foam insulated cable following cleaning. - Prohibit use of aqueous cleaning on silver-plated copper wire. - Removed requirement to protect finished harnesses with bubble wrap. - Require venting of packaging used to store assemblies containing fluoropolymer insulation. - Added metric units to splice pull values *(JFP)*

FOREWORD

This standard is published by the National Aeronautics and Space Administration (NASA) to provide uniform engineering and technical requirements for processes, procedures, practices, and methods that have been endorsed as standard for NASA programs and projects, including requirements for selection, application, and design criteria of an item.

This standard is approved for use by NASA Headquarters and NASA Centers, including Component Facilities and Technical and Service Support Centers, and is intended to be applied on NASA contracts.

This standard prescribes NASA's process and end-item requirements for reliable crimped connections, interconnecting cables, harnesses, and wiring and the installation thereof.

This NASA-STD was developed by NASA Headquarters Office of Safety and Mission Assurance and the NASA Workmanship Standards Program. Requests for information, corrections, or additions to this Standard should be submitted to the National Aeronautics and Space Administration, Director, Safety and Assurance Requirements Division, Office of Safety and Mission Assurance, Washington, DC 20546 or via "Feedback" in the NASA Technical Standards System at http://standards.nasa.gov.

Terrence W. Wilcutt
Chief, Safety and Mission Assurance

6/30/2016
Approval Date

TABLE OF CONTENTS

DOCUMENT HISTORY LOG **2**
TABLE OF CONTENTS **6**
LIST OF APPENDICES **8**
LIST OF FIGURES **9**
LIST OF TABLES **11**

1. SCOPE **12**
1.1 Purpose 12
1.2 Applicability 12

2. APPLICABLE DOCUMENTS **12**
2.1 General 12
2.2 Government Documents 12
2.3 Non-Government Documents 13
2.4 Order of Precedence 13

3. ACRONYMS AND DEFINITIONS **13**
3.1 Acronyms and Abbreviations 13
3.2 Definitions 15

4. REQUIREMENT **19**
4.1 General 19

5. TRAINING AND CERTIFICATION PROGRAM **19**
5.1 General 19

6. FACILITIES, EQUIPMENT, MATERIALS, AND PARTS **19**
6.1 Environmental Conditions 19
6.2 Tool and Equipment Control 19
6.3 Electrostatic Discharge Control Requirements 20
6.4 Inspection Optics 20
6.5 Parts and Materials Selection 20
6.6 Solvents and Cleaners 20

7. DESIGN PRACTICES **21**
7.1 General 21
7.2 Design Considerations 21

8. INTERCONNECTING CABLE/HARNESS FIXTURING **24**
8.1 General 24
8.2 Mockup and Wiring Board Design Parameter 25
8.3 Temporary Identification 25
8.4 Interconnecting Cable and Harness Protection 25

9. FORMING WIRES INTO CABLES AND HARNESSES **27**
9.1 General 27

9.2 Lacing for Trunk, Branches, and Breakouts 28
9.3 Fabric Braid Sleeving (Prewoven) 31
9.4 Fabric Braid Directly Woven on Interconnecting Harness or Cable 32
9.5 Spiral Wrap Sleeving 34
9.6 Plastic Straps 35
9.7 Metal Braid Shielding 36
9.8 Insulation Sleeving/Tubing 36
9.9 Installation of Heat-Shrinkable Sleeving 38
9.10 Long Lengths of Shrinkable Sleeving 39
9.11 Shrinkable Part Requirements and Installation 40

10. STRIPPING INSULATION FROM CONDUCTORS AND CABLE 41
10.1 Stripping Round Conductors 41
10.2 Stripping Jackets Over Shields 43
10.3 Stripping Flat Conductor Cable 43

11. CABLE SHIELDING AND SHIELD TERMINATION 43
11.1 General 43
11.2 Individual Shield Termination Using Two-Piece Crimp Rings 44
11.3 Group-Grounding of Individual Shield Terminations 45
11.4 Large Compression Ring Grounding 47
11.5 Floating Shield Terminations 48
11.6 Unshielded Wire Exposure and Total Length of Grounding Wires 49

12. CRIMP CONNECTIONS 50
12.1 General 50
12.2 Examination of Crimp Contact 50
12.3 Process Controls 51

13. CONNECTOR ASSEMBLY 54
13.1 General 54
13.2 Assembly of Crimp-Type Connectors (Including Terminal Junctions) 54
13.3 Assembly of Solder-Type Connectors 54
13.4 Assembly of Connectors with Non-Removable Solder Cups Including Hermetic and Environmental Types 54
13.5 Assembly (Torquing) of Adapters and Cable Clamps to Connectors 55
13.6 Assembly of RF Connectors and Coaxial Contacts 55
13.7 Process Controls for Two-Piece Crimp Rings and Stub-Type Splicing Devices 56
13.8 Inspection and Verification Testing 56

14. HARNESS IDENTIFICATION 59
14.1 General 59

15. INTERCONNECTING HARNESS AND CABLE CLEANING 60
15.1 General 60
15.2 Cleaning the Harness Assembly 60
15.3 Cleaning Harness Connectors 61

15.4 Cleaning Coaxial Connectors (Assembled) 61

16. INTERCONNECTING HARNESS AND CABLE HANDLING AND PROTECTION 62
16.1 General 62

17. CONNECTOR MATING 62
17.1 General 62
17.2 Connector Mating and Demating 62
17.3 Coaxial Connector Mating 63

18. TESTING AND INSPECTION 64
18.1 General 64
18.2 Testing 64
18.3 Test Methods 64

19. SPLICING 66
19.1 General 66
19.2 General Information 66
19.3 Soldered Splices 66
19.4 Lap Splice 67
19.5 Lash Splice 68
19.6 Solder Sleeve 69
19.7 Soldered Western Union/Lineman Splice 70
19.8 Solder Ferrule 71
19.9 Crimped Splices 73
19.10 Modified Crimp Contact 73
19.11 Crimp Ferrule Splice 74
19.12 Butt Splice 75
19.13 Wire In-Line Junction Devices (Jiffy Junctions) 77

20. QUALITY ASSURANCE PROVISIONS 79
20.1 General 79
20.2 Documentation Verification 80
20.3 Documentation Authorization 81
20.4 Verification of Tools, Equipment, and Materials 81
20.5 Inspection Criteria 82

LIST OF APPENDICES

APPENDIX A. WIRE VISUAL AIDS AND ILLUSTRATIONS 88
APPENDIX B. CRITICAL PROBLEMS IN COAXIAL CABLE ASSEMBLY 98

LIST OF FIGURES

Figure 8-1. Line Drawing of Typical Harness Layout 26
Figure 8-2. Typical Harness Board Hardware and Fixtures 27
Figure 9-1. Starting Stitch 29
Figure 9-2. Spot Tie (Typical) 29
Figure 9-3. Closing Stitch and Single Tape—Illustration 30
Figure 9-4. Alternate Closing Stitch and Single Tape—Illustration 30
Figure 9-5. Running Lockstitch 30
Figure 9-6. Flat Lacing Stitches 31
Figure 9-7. Securing Fabric Braid Sleeving 32
Figure 9-8. Starting Lock 33
Figure 9-9. Forming Ending Pigtail 33
Figure 9-10. Braiding at a Breakout or Y Intersection 34
Figure 9-11. Spiral Wrap Sleeving 35
Figure 9-12. Plastic Strap Orientation 36
Figure 9-13. Illustration of Shrink Sleeve Installation (Typical) 39
Figure 9-14. Installation of Long Lengths of Sleeving to Achieve Controlled Dimensions 40
Figure 9-15. Sleeving Installation (Typical) 41
Figure 11-1. Terminating Overall Shield in RFI Adapter (Typical) 44
Figure 11-2. Example of Individual Shield Termination Using a Heat Shrinkable Solder Sleeve 44
Figure 11-3. Individual Shield Termination Using a Two-Piece Crimp Ring 45
Figure 11-4. Example of Group Grounding of Staggered Shields 46
Figure 11-5. Group-Grounding of Individual Shield Terminations 47
Figure 11-6. Large Compression Ring Grounding (Typical Applications) 48
Figure 11-7. Floating Shield Termination 49
Figure 11-8. Conductor Exposure for Individual Shield Termination Types 50
Figure 12-1. Crimp Joint Tensile Failure Categories 53
Figure 13-1. Typical Push Test Tool 58
Figure 13-2. Application of Retention Tool for Gripping Wire (Typical) 58
Figure 15-1. Visual Examination Inside the Socket Contact for Flux Residue 61
Figure 19-1. Pre-Tinned Conductors 67
Figure 19-2. Soldered Conductors 67
Figure 19-3. Individual Shield Termination with a Lap Splice and Solder Sleeve 67
Figure 19-4. Sleeving over Soldered Connection 68
Figure 19-5. Double Sleeving over Soldered Connection 68
Figure 19-6. Pre-Tinned Conductors 68
Figure 19-7. Lashing of Pre-Tinned Conductors 68
Figure 19-8. Soldered Connection 68
Figure 19-9. Pre-Lash End Type Splice 69
Figure 19-10. Lash End Type Splice 69
Figure 19-11. Soldered Lash Splice 69
Figure 19-12 Sleeved Lash Splice 69
Figure 19-13. Solder Sleeve Prior to Flow 70
Figure 19-14. Fully Melted Solder Sleeve 70

Figure 19-15. Western Union/Lineman Splice 70
Figure 19-16. Initial Wrap for Western Union/Lineman Splice 71
Figure 19-17. Completed Wrap for Western Union/Lineman Splice 71
Figure 19-18. Soldered Western Union/Lineman Splice 71
Figure 19-19. Solder Ferrule 72
Figure 19-20. Solder Ferrule 72
Figure 19-21. Stripped Wires Prior to Insertion 73
Figure 19-22. Stripped Wire Bundle Prior to Insertion 74
Figure 19-23. Wires Crimped Within Contact 74
Figure 19-24. Contact Trimmed and Deburred 74
Figure 19-25. Contact Covered With Shrink Sleeving 74
Figure 19-26. End Type Splice 74
Figure 19-27. Parallel Type Splice 75
Figure 19-28. Butt Splice 76
Figure 19-29. Butt Splice Prior to Wire Insertion 76
Figure 19-30. Butt Splice Prior to Crimp 76
Figure 19-31. Properly Crimped Butt Splice 76
Figure 19-32. Butt Splice with Shrink Sleeving 77
Figure 19-33. Crimped Contact Outside Junction Device 77
Figure 19-34. Crimped Contacts Inserted Into Junction Device 77
Figure A-1 88
Figure A-2 88
Figure A-3 89
Figure A-4 89
Figure A-5 89
Figure A-6 89
Figure A-7 90
Figure A-8 90
Figure A-9 90
Figure A-10 90
Figure A-11 91
Figure A-12 91
Figure A-13 91
Figure A-14 91
Figure A-15 92
Figure A-16 92
Figure A-17 92
Figure A-18 92
Figure A-19 93
Figure A-20 93
Figure A-21 93
Figure A-22 94
Figure A-23 94
Figure A-24 94
Figure A-25 95
Figure A-26 95

Figure A-27 96
Figure A-28 96
Figure A-29 97
Figure A-30 97
Figure A-31 97
Figure B-1. Illustration of Proper Trimback of Jacket to Isolate it from the Clamping System .. 99
Figure B-2. Broken Solder Joint Caused by Insufficient Solder Fill 100
Figure B-3. Problem Point for Kynar Stress Relief Sleeving 100

LIST OF TABLES

Table 7-1. Bend Radii for Completed Interconnecting Cable or Harness 24
Table 9-1. Spot Tie, Plastic Strap, and Stitch Spacing Dimensions 29
Table 9-2. Distances from Connectors or Connector Accessories to Beginning of Harness Ties 31
Table 9-3. Selection Guide for Use of Polyolefin and Polyvinylidene Fluoride Sleeving [in mm (inches)] 38
Table 11-1. Shield Termination Control for Group Grounding 46
Table 11-2. Shield Termination Control (Refer to Figure 11-8) 49
Table 12-1. Crimp Tensile Strength [1] 53
Table 13-1. Pull Force [1] 56
Table 13-2. Contact Retention Test Forces 57
Table 19-1. Crimp Tensile Strength Values for Wire-in-Line Junction (i.e., Jiffy Junction) Devices 78
Table 19-2. Splice Body Retention Values for Wire-in-Line Junction (i.e., Jiffy Junction) Devices 79

CRIMPING, INTERCONNECTING CABLES, HARNESSES, AND WIRING

1. SCOPE

1.1 Purpose

The purpose of this NASA Technical Standard is to set forth requirements for interconnecting cable and harness assemblies that connect electrical, electronic or electromechanical components.

1.2 Applicability

1.2.1 This standard is approved for use by NASA Headquarters and NASA Centers, including Component Facilities, and Technical and Service Support Centers, and may be cited in contract, program, and other Agency documents as a technical requirement. This Standard may also apply to the Jet Propulsion Laboratory, other contractors, grant recipients, or parties to agreements to the extent specified or referenced in their contracts, grants, or agreements.

1.2.2 This standard applies to critical work, as defined by NPD 8730.5. Critical work is any task that if performed incorrectly or in violation of prescribed requirements poses a credible risk of loss of human life; serious injury; loss of a Class A, B, or C payload (see NPR 8705.4); loss of a Category 1 or Category 2 mission (see NPR 7120.5); or loss of a mission resource valued at greater than $2M (e.g., NASA space flight hardware, Government test or launch facility).

1.2.3 Use of the term “supplier” applies to any entity that is manufacturing hardware in accordance with the requirements herein including NASA Centers and NASA contractors.

2. APPLICABLE DOCUMENTS

2.1 General

The documents listed in this section contain provisions that constitute requirements of this Standard as cited in the text. Use of more recent issues of cited documents may be authorized by the responsible Technical Authority. The applicable documents are accessible via the NASA Standards and Technical Assistance Resource Tool at http://standards.nasa.gov or may be obtained directly from the Standards Developing Organizations or other document distributors.

2.2 Government Documents

2.2.1 National Aeronautics and Space Administration

NPD 8730.5	NASA Quality Assurance Program Policy
NPR 7120.5	NASA Space Flight Program and Project Management Requirements

NPR 8705.4	Risk Classification for NASA Payloads
NASA-STD-8739.6	Implementation Requirements for NASA Workmanship Standards

2.3 Non-Government Documents

AMS-DTL-23053/5	Insulation Sleeving, Electrical, Heat Shrinkable, Polyolefin, Flexible, Crosslinked
AMS-DTL-23053/6	Insulation Sleeving, Electrical, Heat Shrinkable, Polyolefin, Semi-Rigid, Crosslinked
AMS-DTL-23053/7	Insulation Sleeving, Electrical, Heat Shrinkable, Polyethylene Terephthalate, Non-Crosslinked
AMS-DTL-23053/8	Insulation Sleeving, Electrical, Heat Shrinkable, Polyvinylidene Fluoride, Semi-Rigid, Crosslinked
AMS-DTL-23053/11	Insulation Sleeving, Electrical, Heat Shrinkable, Fluorinated Ethylene Propylene, Non-Crosslinked
AMS-DTL-23053/12	Insulation Sleeving, Electrical, Heat Shrinkable, Polytetrafluoroethylene
J-STD-001F	Requirements for Soldered Electrical and Electronic Assemblies
J-STD-001FS	Space Applications Electronic Hardware Addendum to J-STD-001F Requirements for Soldered Electrical and Electronic Assemblies

2.4 Order of Precedence

This Standard establishes requirements for (enter specific purpose from Scope) but does not supersede nor waive established Agency requirements found in other documentation. Conflicts between this Standard and other requirements documents shall be resolved by the responsible Technical Authority.

3. ACRONYMS AND DEFINITIONS

3.1 Acronyms and Abbreviations

The following acronyms apply to terms used in this Standard.

AC	Alternating Current
ASTM	American Society for Testing and Materials

AWG	American Wire Gage
CVCM	Collected Volatile Condensable Material
DC	Direct Current
DWV	Dielectric Withstanding Voltage
EMI	Electromagnetic Interference
ESD	Electrostatic Discharge
ESDS	Electrostatic Discharge Sensitive
FEP	Fluorinated Ethylene Propylene
GHz	Gigahertz
GSFC	Goddard Space Flight Center
IR	Insulation Resistance
JPL	Jet Propulsion Laboratory
NASA	National Aeronautic and Space Administration
NASA-STD	NASA Standard
NPR	NASA Procedural Requirements
OD	Outside Diameter
PET	Polyethylene Terephthalate
PTFE	Polytetrafluoroethylene
PVDF	Polyvinylidene Fluoride
RF	Radio Frequency
RFI	Radio Frequency Interference
RH	Relative Humidity
RMS	Root Mean Square
SDS	Safety Data Sheet

3.2 Definitions

The definitions listed below are in addition to those listed in NASA-STD-8709.22, Safety and Mission Assurance Acronyms, Abbreviations, and Definitions.

Accessories, Connector: Removable mechanical hardware, such as cable clamps, backshells, and screws, that are parts of the connector assembly in a harness. Removable mechanical hardware, such as cable clamps, backshells, and screws, that are parts of the connector assembly in a harness.

Adapter: An intermediate device to provide for attaching special accessories or to provide special mounting means.

Backshell: Are a connector accessory that are installed onto the rear connector accessory threads of plug or receptacle connectors to provide mechanical protection to the individual harness wires entering the back of the connector.

Barrel (Contact Wire Barrel): The section of contact that accommodates the stripped conductor.

Birdcaging: The radial expansion of individual strands in a stranded conductor (bowing outward) that can occur in the exposed portion of the conductor between the insulation strip and termination point.

Braid: A fibrous or metallic group of filaments interwoven to form a protective covering over one or more wires.

Breakout: The separation of a conductor or group of conductors from the main body of wires in a harness.

Bubble Pack: A laminated plastic sheet that is formed with patterned air entrapment ("bubbles"). The bubbles provide excellent cushioning for anything enclosed between layers of the material.

Cable: A shielded single conductor or a combination of conductors insulated from one another (multiple conductor).

Cable, Coaxial: A cable in which an insulated conductor is centered inside another. The outer conductor is usually a metal braid or metal sheath. Braided cables usually have an outer insulating jacket over the braid. Coaxial cables are used primarily for transmission of RF signals.

Cable, Shielded: One or more insulated conductors covered with a metallic outer covering, usually a metal braid.

Cable Clamp: A mechanical clamp attached to the wire entrance of a connector to support the cable or wire bundle, provide stress relief, and absorb vibration and shock.

Certification: The act of verifying and documenting that personnel have completed required training, have demonstrated specified proficiency, and have met other specified requirements.

Cold Flow: Movement of insulation (e.g., Teflon) caused by pressure.

Conductor: A lead or wire, solid, stranded, or printed wiring path serving as an electrical connection.

Connector, Body: The main portion of a connector to which contacts and other accessories are attached.

Connector, Grommet: An elastomeric seal used on the cable side of a connector body to seal the connector against contamination and to provide stress relief.

Connector, Insert: The part of a connector that holds the contacts in position and electrically insulates them from each other and the connector body.

Contact: The conductive element in a connector or other terminal device that mates with a corresponding element for the purpose of transferring electrical energy.

Contact, Crimp: A contact whose crimp barrel is a hollow cylinder that accepts the conductor. After a conductor has been inserted, a tool is used to crimp the contact metal firmly onto the conductor.

Contact, Insertable/Removable: A contact that can be mechanically joined to or removed from an insert. Usually, special tools are used to insert (lock) the contact into place or to remove it.

Contact, Pin: Male-type contact designed to slip inside a socket contact.

Contact Retention: The axial load in either direction that a contact can withstand without being dislodged from its normal position within an insert or body.

Contact, Socket: A female-type contact designed to slip over a pin contact.

Contaminant: An impurity or foreign substance present in a material that affects one or more properties of the material. A contaminant may be either ionic or nonionic. An ionic, or polar compound, forms free ions when dissolved in water, making the water a more conductive path. A nonionic substance does not form free ions, nor increase the water's conductivity. Ionic contaminants are usually processing residue such as flux activators, finger prints, and etching or plating salts.

Crimp: The physical compression (deformation) of a contact barrel around a conductor to make an electrical and mechanical connection to the conductor.

Crimping: A method of mechanically compressing or securing a terminal, splice, or contact to a conductor.

Drain Wire: A wire that runs linearly along a foil shield wire or cable and is used to make contact with the shield. Grounding of foil shields is done with drain wires.

Electromagnetic Interference: The unwanted intrusion of electromagnetic radiation energy whose frequency spectrum extends from subsonic frequency to X-rays.

Ferrule: A short metal tube used to make crimp connections to shielded or coaxial cables.

Fillet: A smooth concave buildup of material between two surfaces; e.g., a fillet of solder between a conductor and a solder terminal.

Grommet: An insulator that covers sharp edges of holes through panels and partitions to protect wire insulation from cut-through damage.

Harness: One or more insulated wires or cables, with or without helical twist; with or without common covering, jacket, or braid; with or without breakouts; assembled with two or more electrical termination devices; and so arranged that as a unit it can be assembled and handled as one assembly.

Insertion Tool: A device used to install contacts into a contact cavity in a connector insert.

Interfacial Seal: A sealing of mated connectors over the whole area of the interface to provide sealing around each contact.

Jacket: The outermost layer of insulating material of a cable or harness.

Joint: A termination.

Mate: The joining of two connectors.

Molding: The sealing of a connector backshell area or a cable breakout with a compound or material that excludes moisture and provides stress relief. The material is injected into molds that control its configuration.

Outgassing: The release of a volatile part(s) from a substance when placed in a vacuum environment.

Radio Frequency: The frequency spectrum from 15 kHz to 100 GHz. Cables are seldom used above 18 GHz.

Radio Frequency Interference: Electromagnetic radiation in the radio frequency spectrum from 15 kHz to 100 GHz.

Repair: The action on a nonconforming product to make it acceptable for the intended use.

Rework: The action on a nonconforming product to make it conform to the requirements.

Sealing Plug: A plug that is inserted to fill an unoccupied contact aperture in a connector. Its function is to seal an unoccupied aperture in the assembly, especially in environmental connectors.

Shielded Cable: Cable surrounded by a metallic covering intended to minimize the effects of electrical crosstalk interference or signal radiation.

Shielding: The metal covering surrounding one or more conductors in a circuit to prevent interference or signal radiation.

Solder: A nonferrous, fusible metallic alloy used to join metallic surfaces.

Soldering: The process of joining clean metallic surfaces through the use of solder without direct fusion of the base metals.

Solder Sleeve: A heat-shrinkable solder termination device with meltable sealing preforms at ends.

Splice: The joining of two or more conductors to each other.

Spacecraft: Devices, manned or unmanned, which are designed to be placed into a suborbital trajectory, an orbit about the earth, or into a trajectory to another celestial body.

Strain Relief: A connector device that prevents the disturbance of the contact and cable terminations.

Stranded Conductor: A conductor composed of a group of smaller wires.

Stress Relief: The formed portion of a conductor that provides sufficient length to minimize stress between terminations.

Strip: To remove insulation from a conductor.

Supplier: In-house NASA, NASA contractors, and subtier contractors.

Tang (Connector Backshell): A backshell tang is a tapering metal projection (straight, 45°, or 90° to the axis of the connector) designed to accommodate cable-tie attachments. The cable-ties grip and hold harness wires exiting from the connector, thus providing stress relief for the wires.

Tines: Tines are the members of a contact retention system that capture or "lock" removable crimp contacts into the contact cavities.

Wicking: A flow of molten solder, flux, or cleaning solution by capillary action.

Wire: A single metallic conductor of solid, stranded, or tinsel construction, designed to carry currents in an electrical circuit. It may be bare or insulated.

Wire Dress: The arrangement of wires and laced harnesses in an orderly manner.

4. REQUIREMENT

4.1 General

4.1.1 When there is a conflict between the requirements of NASA-STD-8739.6 and those herein, the requirements in NASA-STD-8739.6 shall take precedence.

4.1.2 A program shall be established to assure continuing process capability.

4.1.3 Special controls shall be developed for process parameters and equipment settings that influence product compliance with critical performance and quality requirements.

5. TRAINING AND CERTIFICATION PROGRAM

5.1 General

This section has been superseded by NASA-STD-8739.6. Refer to NASA-STD-8739.6, Chapter 5 and Appendix A therein for applicable training and certification requirements.

6. FACILITIES, EQUIPMENT, MATERIALS, AND PARTS

6.1 Environmental Conditions

6.1.1 The environmental control requirements of NASA-STD-8739.6 shall apply.

6.1.2 Lighting. Light intensity shall be no less than 1077 lumens per square meter (lm/m2) (100 foot-candles) on the surface where cabling and wiring are being assembled, inspected, or tested.

6.2 Tool and Equipment Control

6.2.1 The tool and equipment selection, use and control requirements of NASA-STD-8739.6 shall apply. See NASA-STD-8739.6 for metrology and calibration requirements.

6.2.2 The supplier's process documentation for tool and equipment use and control shall be available for review and approval prior to processing mission hardware.

6.2.3 The following requirements apply for wire strippers:

a. Either precision mechanical tools or thermal strippers shall be used for insulation stripping.

b. Thermal strippers shall have variable temperature control.

c. The tools shall not nick, ring, gouge, or stretch conductors or remove plating so that the base metal shows. Superficial scraping of conductors is acceptable providing conductor base material is not exposed.

d. The cutting edges of wire trimming tools shall be maintained sharp and free from nicks and indentations.

6.3 Electrostatic Discharge Control Requirements

When Electrostatic Discharge (ESD) control is required during workmanship operations defined herein, ESD Control shall be in accordance with Chapter 7 of NASA-STD-8739.6.

6.4 Inspection Optics

6.4.1 The inspection optics shall be in accordance with Chapter 6 of NASA-STD-8739.6.

6.4.2 Visual inspection shall be aided by magnification between 4X and 10X.

6.5 Parts and Materials Selection

6.5.1 Specifications used to order connectors may require special instructions to ensure grommets and gaskets are a non-outgassing type. When connectors cannot be special-ordered to exclude grommets and gaskets which do not meet project outgassing requirements in their as-delivered condition, instructions shall be provided to the Workmanship operator for removing or replacing those connector subcomponents.

6.5.2 Materials used shall be subjected to NASA approval.

6.5.3 In order to satisfy the crimp contact pull and crimp ring testing requirements in paragraph 12.3 and 13.7, respectively, for connector types which are sold without sufficient spare contacts or crimp rings, suppliers will need to purchase extra contacts or crimp rings. The number of extra parts will be determined by the number of shifts or production periods in which a given type of contact or crimp ring is used. Lot traceability for contacts obtained for crimp testing shall be maintained between the contacts used in the connector and the contacts used for pull testing.

6.5.4 For nickel-plated wire, or silver-plated wire in applications above 150º C, nickel-plated crimp barrels are preferred.

6.5.5 Materials not conforming or not required for the operations involved for the processes described herein shall be removed from the work area or tagged non-usable.

6.6 Solvents and Cleaners

6.6.1 The requirements of 6.7 of NASA-STD-8739.6 apply for the selection of solvents.

7. DESIGN PRACTICES

7.1 General

7.1.1 Harness design shall make provision for all Project performance requirements as they apply to each harness section as well as the following:

a. Installation stress and final lay (e.g., ease of bending, flexibility in twisting, stress relief).

b. Electrical isolation.

c. Ability to fit into confined spaces or near or around mechanical edges.

d. Thermal management.

e. Current and voltage derating.

f. Voltage drop.

g. Repairability and reliability (e.g. redundancy, not using connector contact locations, spare pin requirements, arc tracking).

h. Identification of connectors and cable and harness segments.

7.1.2 Precautions shall be taken to prevent the mismating of connectors, caused by interchanging or by reversing, through one of the following techniques:

a. Use of constraints that locate similar connectors built into interconnecting cables and harnesses so they cannot be interchanged.

b. Selection of different sizes for connectors to be located adjacent to each other.

c. Polarization or dissimilar keying of adjacent, similar connectors.

d. Ensure clarity in marking and coding connectors.

e. Use of confidence loop circuits to check out proper mated positions.

7.2 Design Considerations

The following considerations shall be taken in any interconnecting cable or harness design and incorporated into the design as applicable:

7.2.1 Properties of wire insulation, electrical contacts, lacing tape, braid sleeving, plastic strap, wrap sleeving, and plastic tubing (processibility, flammability, arc tracking resistance, vacuum stability, resistance to heat, cold flow, etc.) shall be appropriate for the application.

7.2.2 Plastic straps should have metal tangs that lock securely into the "ribbed" portion of the straps when appropriate for the application.

7.2.3 Tin-plated parts (e.g., terminals, crimp barrels, etc.) shall be fused or alloyed with tin-lead plating. See NASA-STD-8739.6 for lead-free (Pb-free) control requirements.

7.2.4 Methods for identifying cables, connectors, and wires shall be provided.

7.2.5 Design features shall address radio frequency interference/electromagnetic interference (RFI/EMI) shielding performance requirements.

7.2.6 High Voltage (HV) circuits carrying potentials in excess of $200VAC_{RMS}$, or 300VDC through environments that support arcing shall be terminated in single-contact, high voltage connectors.

7.2.7 Electrical wiring of redundant systems, redundant subsystems, or redundant major elements of subsystems shall not be routed in the same bundle or through the same connector with wiring of the other system, subsystem, or subsystem element.

7.2.8 American wire gage (AWG) 24 wire size and larger is preferred for conductors in interconnecting cable and harness assemblies, including coaxial or triaxial cables.

7.2.9 High strength copper alloy shall be used for AWG 24 and smaller conductors.

7.2.10 Torque values applicable for connectors, backshells, and other hardware shall be defined.

7.2.11 Harness designs and routing shall provide support and protection to harnesses and cables so that they are protected from abrasion, cold flow, cut through, vibration, chafing, flexing, and sharp edges.

7.2.12 Designs shall minimize splicing.

7.2.13 Semi-rigid coaxial cable shall be preconditioned using thermal cycling prior to preparation for connectorization. This procedure should also be considered for longer runs of flexible coaxial cable.

7.2.14 Line voltages shall be confined to connectors with sockets to preclude exposing voltage points when connectors are disconnected.

7.2.15 Specifying the use of sealing plugs and unused contacts in environmental connectors.

7.2.16 When necessary to support electrical performance or mechanical flexibility around routing angles, wire dress and lay configurations shall be specified in the manufacturing instructions. Fabricate cables containing discrete wires in one or more layers by winding the wires together uniformly.

7.2.17 Whether successive twisted layers are twisted contrahelically or unidirectionally is optional. Winding shall prevent the introduction of residual twist into individual conductors.

7.2.18 The length of lay for each twisted layer shall be between 8 and 16 times the outer diameter of the harness.

7.2.19 The bend radius data given in Table 7-1 shall apply for bending that occurs in the installed interconnecting harness or cable.

7.2.20 Wires exiting from connectors shall be stress relieved.

7.2.21 The use of solder sleeves (where wire insulation temperatures permit), hand soldering, or crimp rings are acceptable for terminating individual shields.

7.2.22 Concern for placement of power and ground lines in contact assignments for system safety.

7.2.23 Materials for potting connectors suited for applications.

7.2.24 Selection of metal braid shielding should be sized as appropriate per application.

7.2.25 Splicing. Damaged or broken conductors shall not be spliced.

7.2.26 The following requirements apply for crimped connections.

a. Crimped contacts shall be used with stranded wire only.

b. Solid wire shall not be used with crimped contacts.

c. Solid, tinned wire shall not be used in crimped contacts.

7.2.27 Associated materials, parts, and hardware shall be selected to enable the cable and harness to meet performance requirements.

7.2.28 Provision shall be made for stress relief in wires entering connectors from harnesses (e.g. connector backshells, encapsulation, and stress relief boots).

7.2.29 Support of wiring, wire bundles, and harnesses shall be used to minimize shock and vibration induced stress.

7.2.30 Excessive flexing or pressure on the harness over sharp or rough edges shall be prevented.

7.2.31 Harness and cable protection shall be added in areas where sharp or rough edges are present and abrasion could occur.

7.2.32 The use of splices in a harness design should be minimized as much as possible. The simplest and most reliable wiring design is one that results in the routing of a dedicated, continuous, and unbroken conductor from point to point. The following shall be incorporated into any splice design:

7.2.33 Shrink sleeving over the splice area shall be protected from cold flow and abrasion.

7.2.34 Splices shall be covered with a single layer of heat-shrinkable tubing or insulation material that meets or exceeds the minimum electrical isolation specified in the engineering documentation. Additional layers of tubing and insulation may be added to splices to increase electrical isolation or to provide additional environmental or mechanical protection.

7.2.35 Splices shall be staggered to minimize buildup of the wire bundle diameter.

7.2.36 Splices shall not be located in areas of the cable where flexing may occur or in bend radii where the primary insulation may be compromised.

7.2.37 Splices shall be prohibited within two harness diameters of a breakout.

7.2.38 Splices shall be identified and fully defined on the associated drawings including type and location.

7.2.39 Heat shrinkable soldering devices shall not be used in the vicinity of sensors, optics, or other devices whose performance can be degraded by surface contamination.

7.2.40 The solder alloy and the flux type in heat shrinkable soldering devices shall be selected for the type of wire being spliced.

7.2.41 Splices shall not be installed where adjacent components, wires, solder joints, structures, etc. cannot be adequately shielded or otherwise protected from a heat source during the splice installation.

Table 7-1. Bend Radii for Completed Interconnecting Cable or Harness

Wire or Harness Type	Optimum Bend Radius	Minimum Bend Radius
Individual coaxial cable.	10 x OD [1/]	6 x OD
Polyimide (Kapton) insulated	15 x OD	10 x OD
Overall harness (with coaxial cable or AWG size 8 or larger).	10 x OD	6 x OD
Overall harness (with AWG size 10 or smaller without coaxial cable).	10 x OD	3 x OD
Overall harness (with polyimide insulated wires included).	15 x OD	10 x OD

1/ Outside Diameter

8. INTERCONNECTING CABLE/HARNESS FIXTURING

8.1 General

8.1.1 Layout and fixturing shall be provided for all complex interconnecting cables and harnesses.

8.1.2 Permanent bends and offsets shall be built into harnesses so that the final wire dress will not be under continuous stress and tension after installation.

8.1.3 Connector backshells shall accommodate bends and offsets in wire harnesses, as appropriate, to avoid continuous stress.

8.1.4 The layout shall be designed to limit the amount of bending, pulling, and other handling a harness will receive during installation.

8.2 Mockup and Wiring Board Design Parameter

8.2.1 A full-sized, three-dimensional (3-D) form layout fixture shall be provided for all complex interconnecting cables and harnesses to ensure proper routing, wire lengths, connector configurations, support requirements, and access requirements of the wiring harnesses. The form layout fixture may be limited to partial installations which contain the complex wiring harnesses. Typical harness board layout and typical hardware and fixtures are shown in Figures 8-1 and 8-2, respectively.

8.3 Temporary Identification

8.3.1 Temporary identification markers may be used for in-process identification requirements. All temporary markers shall be removed from completed cabling and harnessing and shall not leave a contaminating residue.

8.4 Interconnecting Cable and Harness Protection

8.4.1 The supplier shall establish and implement procedures to protect interconnecting cables and harnesses from damage and degradation.

8.4.2 Connectors not being actively assembled shall be individually protected by wrapping them in bubble pack or other physical covering.

8.4.3 At the end of the work shift, protective covering shall be spread over the harnesses in fabrication.

8.4.4 Harnesses not in active fabrication (those in temporary storage) shall be covered by protective covering.

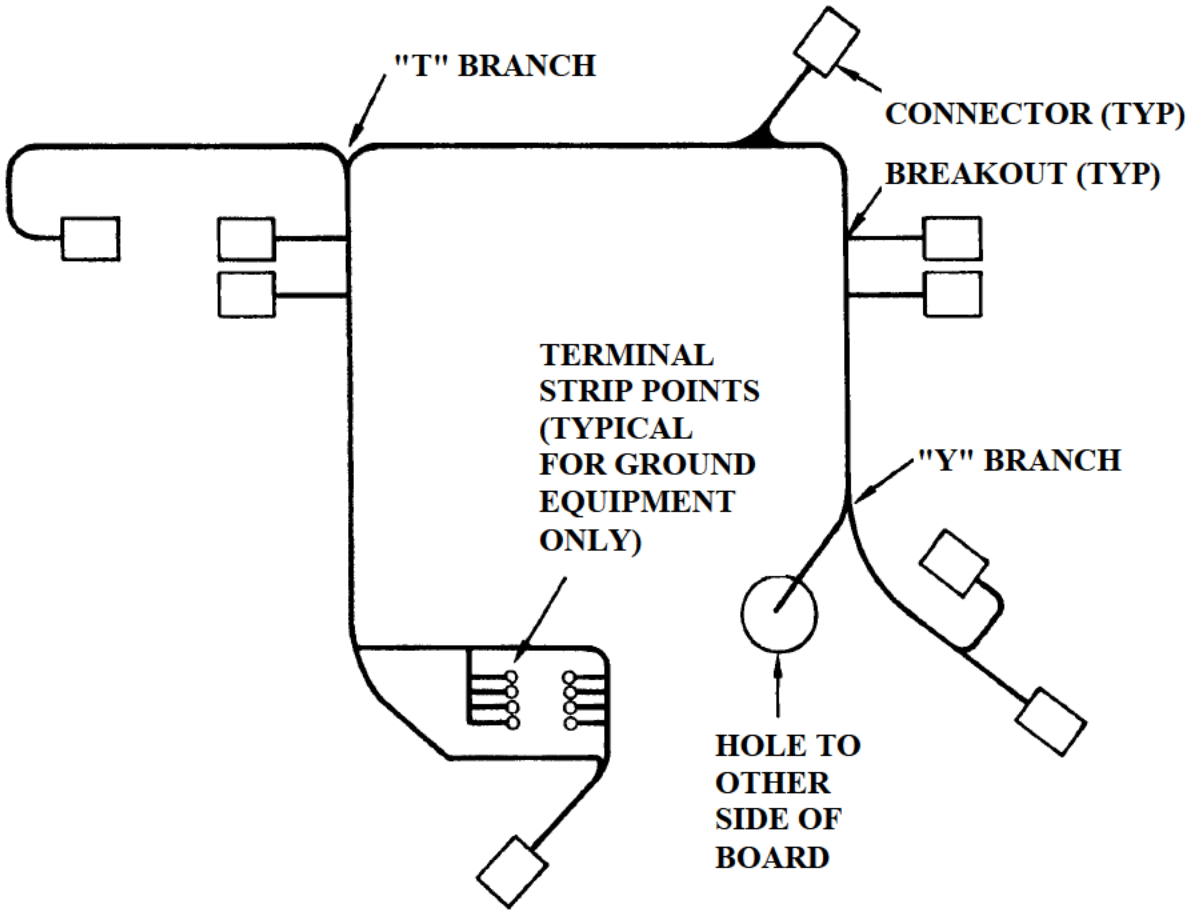

Figure 8-1. Line Drawing of Typical Harness Layout

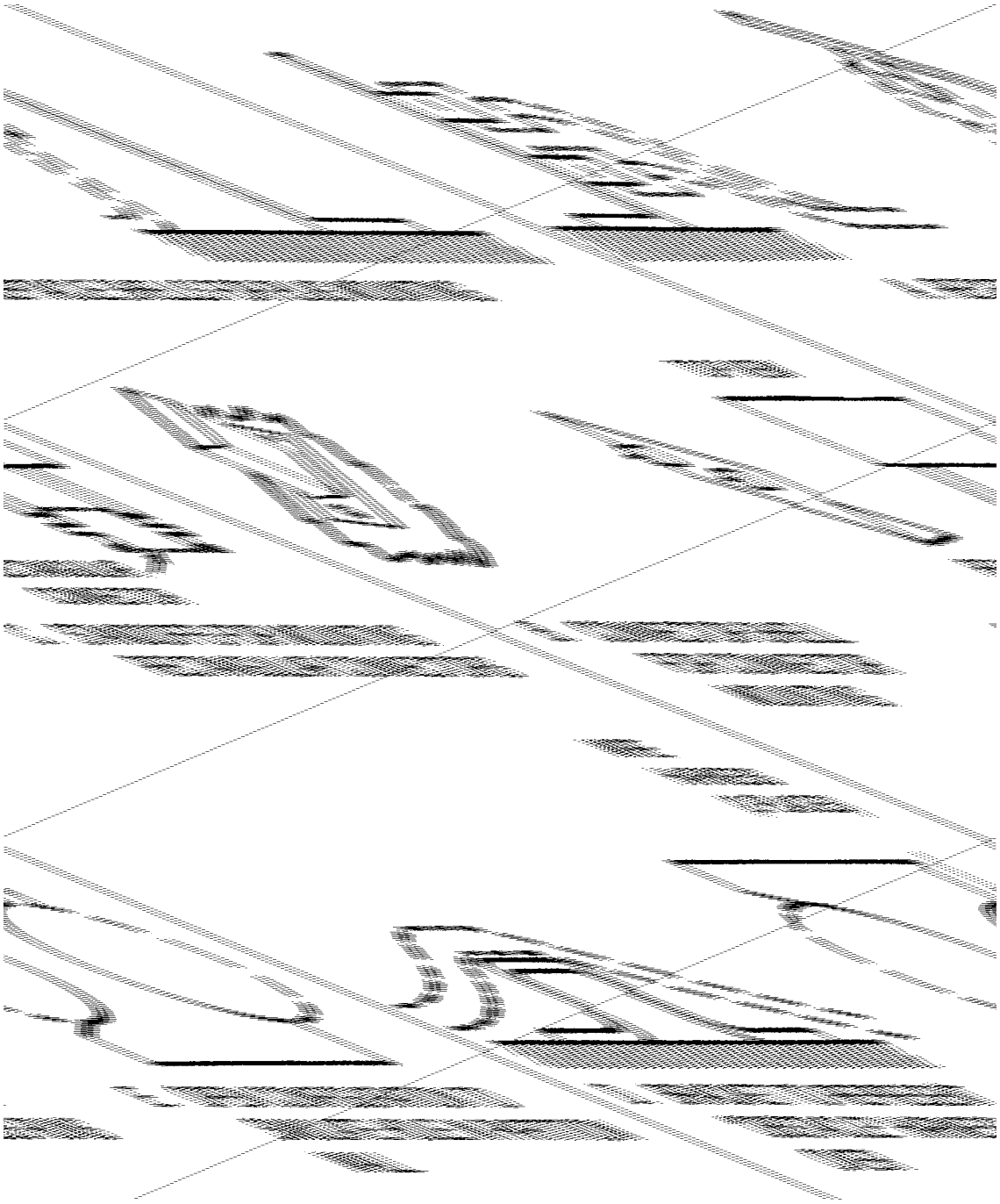

Figure 8-2. Typical Harness Board Hardware and Fixtures

9. FORMING WIRES INTO CABLES AND HARNESSES

9.1 General

9.1.1 Wiring shall be assembled in interconnecting cables or harnesses as described herein.

9.1.2 Fabrication methods and assembly techniques that assure the production of high quality interconnecting cables and harnesses shall be used.

9.2 Lacing for Trunk, Branches, and Breakouts

9.2.1 When engineering documents specify the use and type of lacing, the following requirements shall apply.

9.2.2 Lacing tie-ends shall be trimmed.

9.2.3 When knots are staked (see Figure 9-7), the necessary compounds, as well as any special design requirements, shall be specified.

9.2.4 The following requirements apply for the starting stitch:

a. Harnesses laced with single tape shall initially be tied with a starting stitch.

b. Single-tape starting stitches shall be the same as a spot tie with a running end or as shown in Figure 9-1 View A.

c. Starting stitches for double lacing shall be as shown in Figure 9-1 View B.

d. Starting stitches shall not place stress on wire terminations.

9.2.5 Spot Ties. Spot ties shall consist of a clove hitch followed by a square knot as shown in Figure 9-2 or other non-slip knots. See Table 9-1 for spot tie spacing.

9.2.6 The following requirements apply for the closing stitch:

a. Single or double lacing tape shall be terminated with a closing stitch as shown in Figure 9-3.

b. Lacing shall be terminated at every major breakout or branch and at the extremity of the harness (Major breakouts normally contain a large percentage of the wire volume, such as 25 to 30 percent or more).

c. The stitching shall terminate close to the extremity of the harness but shall not stress the wire terminations.

d. Closing and starting stitches at branches and breakouts shall be next to the breakout. An alternate closing stitch method is shown in Figure 9-4.

e. Single or small multiple breakouts of two or three wires need not have closing and starting stitches, but may have running lockstitches on each side (Figure 9-5).

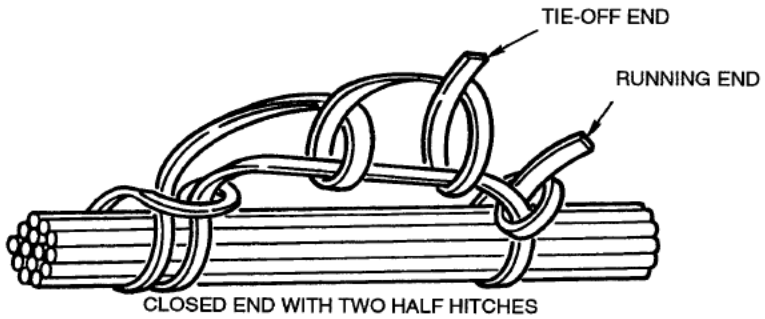

A. STARTING STITCH, SINGLE TAPE

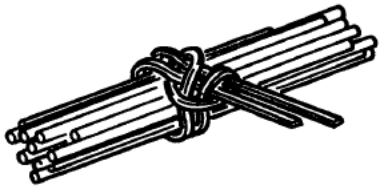

B. STARTING STITCH, DOUBLE TAPE

Figure 9-1. Starting Stitch

A. CLOVE HITCH

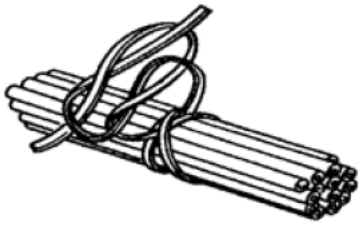

B. CLOVE HITCH AND SQUARE KNOT

Figure 9-2. Spot Tie (Typical)

Table 9-1. Spot Tie, Plastic Strap, and Stitch Spacing Dimensions

Harness Diameter mm (Inches)	Maximum Distance Between Harness Ties mm (Inches)
6.4 (0.25) or less	19.1 (0.75)
12.7 (0.50)	38.1 (1.50)
25.4 (1.00)	50.8 (2.00)
Larger than 25.4 (1.00)	76.2 (3.00)

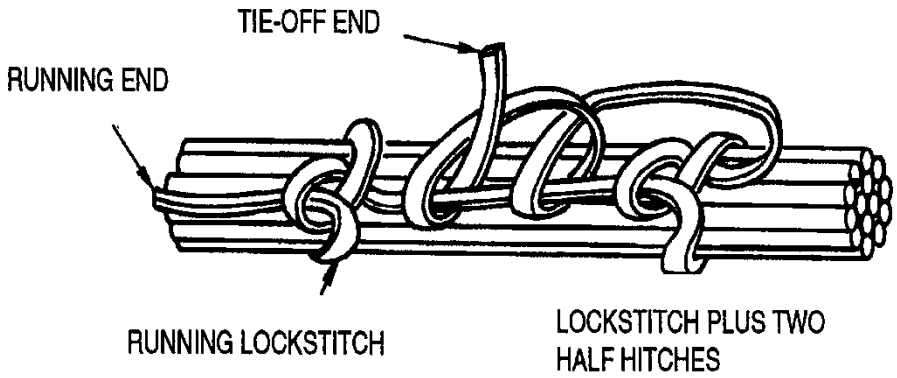

Figure 9-3. Closing Stitch and Single Tape—Illustration

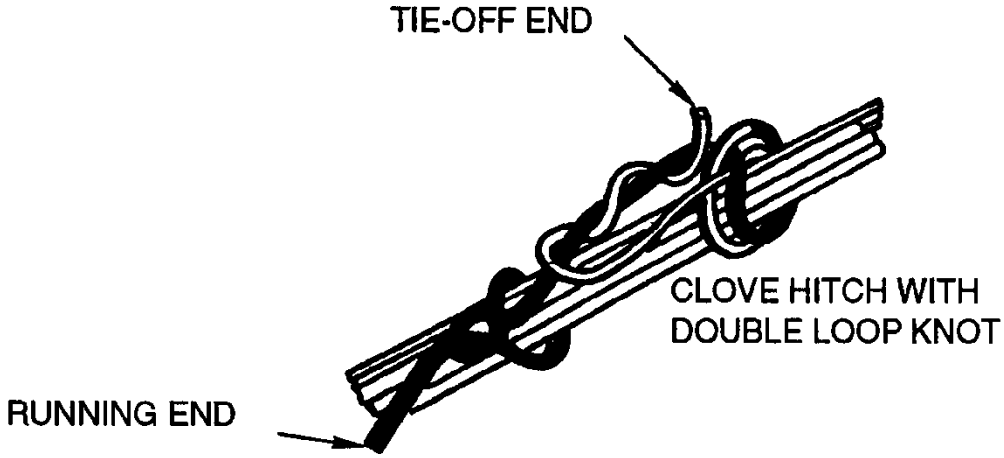

Figure 9-4. Alternate Closing Stitch and Single Tape—Illustration

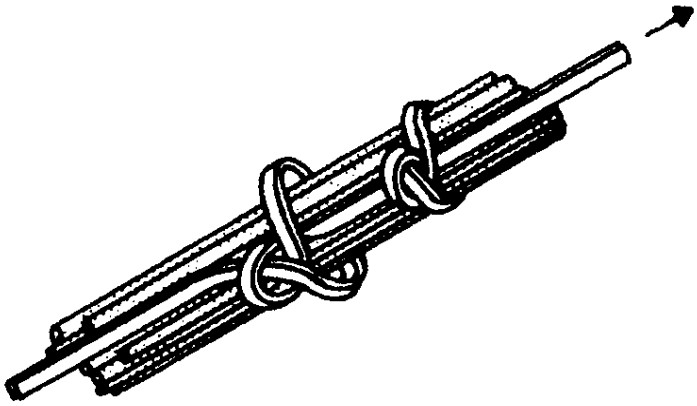

Figure 9-5. Running Lockstitch

9.2.7 Running Lockstitch. Continuous lacing shall be achieved using running lockstitches as shown in Figure 9-5.

9.2.8 The following requirements apply for the stitch spacing:

a. Lacing stitches and spot ties shall be placed as detailed in Table 9-1.

b. A tie or stitch shall be placed immediately before and immediately after any breakout of the wire or cable from the harness. Dimensions from the connector or connector accessories to start of harness tie are given in Table 9-2.

Table 9-2. Distances from Connectors or Connector Accessories to Beginning of Harness Ties

Harness-Bundle Diameter mm (inches)	Distance From Connector or Connector Accessory to Start of First Tie mm (inches)
Less than 12.7 (.5)	25.4 - 50.8 (1 - 2)
12.7 to 25.4 (.5) (.5 to 1)	50.8 - 76.2 (2 - 3)
25.4 (1) or larger	76.2 - 101.6 (3 - 4)

9.2.9 Flat Stitching. Flat stitching shall utilize either of the stitches pictured in Figure 9-6.

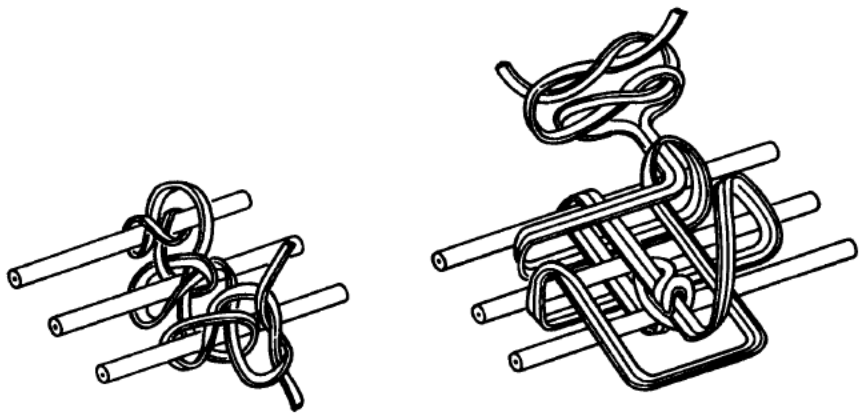

Figure 9-6. Flat Lacing Stitches

9.2.10 The following requirements apply for the large breakouts:

a. Lockstitching shall terminate with a closing stitch before each large breakout or branch of the harness.

b. The lacing shall start anew with a starting stitch on the opposite side of the breakout on each branch.

9.3 Fabric Braid Sleeving (Prewoven)

9.3.1 Prewoven fabric (unvarnished) braid sleeving to be installed over the wire harness shall be slightly oversized so that it can be slid over the bundle.

9.3.2 Braided sleeving shall be snugly dressed down over the wire bundle.

9.3.3 Continuous braid sleeving shall be secured at the ends by plastic cable straps, spot ties, clamps, heat shrinkable sleeving, or a potting material.

9.3.4 When secured, the covering shall not slide freely.

9.3.5 Sleeving shall be trimmed and terminated at a breakout but shall not be punctured or slit to provide openings for breakout.

9.3.6 After installation, braided sleeving shall be secured or treated in one of the following ways to eliminate fraying or unraveling.

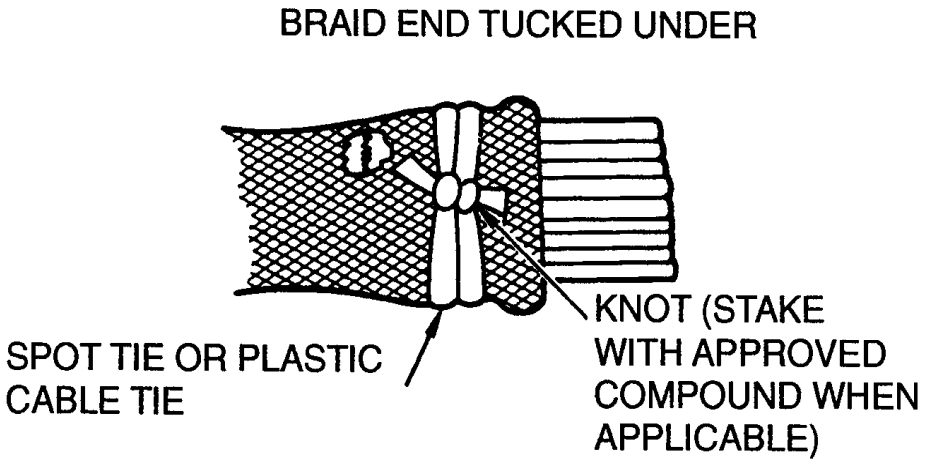

Figure 9-7. Securing Fabric Braid Sleeving

9.3.7 Braided sleeving may be secured by a spot tie or plastic cable strap. The end of the braid shall be tucked under and secured with a spot tie or plastic strap (Figure 9-7). The end of the braid may be secured by connector clamps, other hardware, or potting.

9.3.8 The ends of glass braids may be bonded using an adhesive. Excessively frayed glass braid material shall be trimmed away prior to application of the adhesive.

9.3.9 When the adhesive used to bond the ends of glass braid is dry, the braid shall be secured by spot tying or other means so that it does not slip on the wire bundle.

9.3.10 Polyamide (nylon) braids (for use on ground service equipment) may have their ends sealed by use of a "hot knife" or similar instrument.

9.4 Fabric Braid Directly Woven on Interconnecting Harness or Cable

9.4.1 Fabric braids woven directly on interconnecting harnesses or cables may be loose or tight, as necessary to produce the degree of flexibility required. The braid shall be smooth and shall provide coverage that leaves no gaps through which the wires can be seen.

9.4.2 No frayed ends of fabric braids shall be visible.

9.4.3 All pigtails shall be secured.

9.4.4 Braids applied tightly shall not terminate so close to connectors that they stress wires attached to solder cups.

9.4.5 Spot ties, plastic straps, lacing, and other temporary holding means shall be removed from wire bundles prior to braid application.

9.4.6 Flat tapes may be left under braid if the tape has a low profile. Typical braiding techniques are shown in Figures 9-8, 9-9, and 9-10.

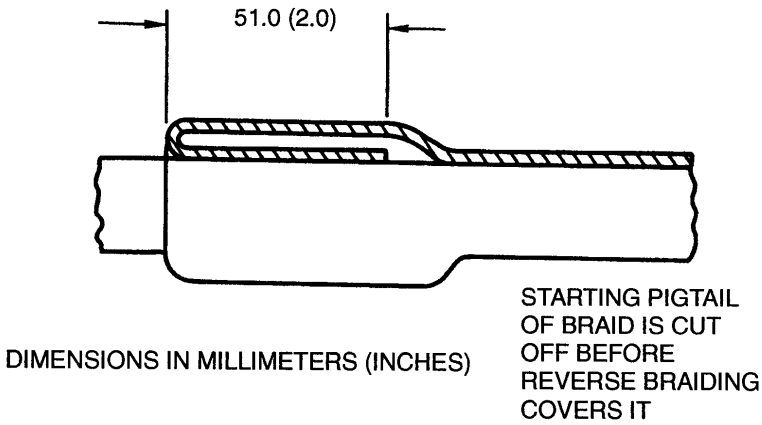

Figure 9-8. Starting Lock

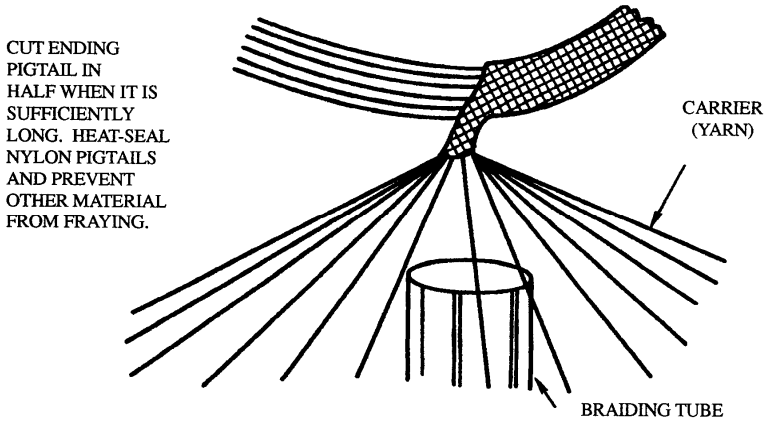

Figure 9-9. Forming Ending Pigtail

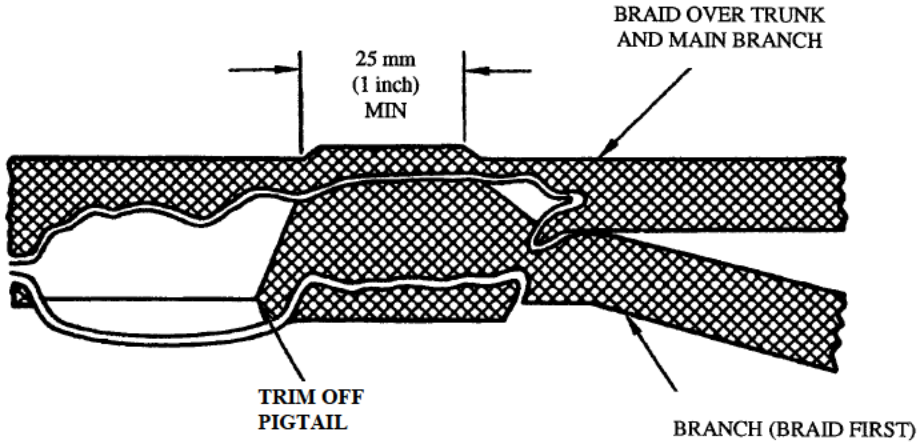

Figure 9-10. Braiding at a Breakout or Y Intersection

9.5 Spiral Wrap Sleeving

9.5.1 Spiral wrap sleeving shall be installed to make firm contact with the wire bundle.

9.5.2 The ends of the spiral wrap shall be trimmed to eliminate sharp edges or points that might damage the insulation.

9.5.3 The sleeving may be butted or applied as an open spiral, but shall not be overlapped (Figure 9-11).

9.5.4 When spiral sleeving is applied, the ends of the wire bundle shall be secured by the tie wraps or by other means (see paragraphs 9.2 and 9.3).

9.5.5 Spiral wrap sleeving shall not be used on mission critical or flight hardware including launch vehicles.

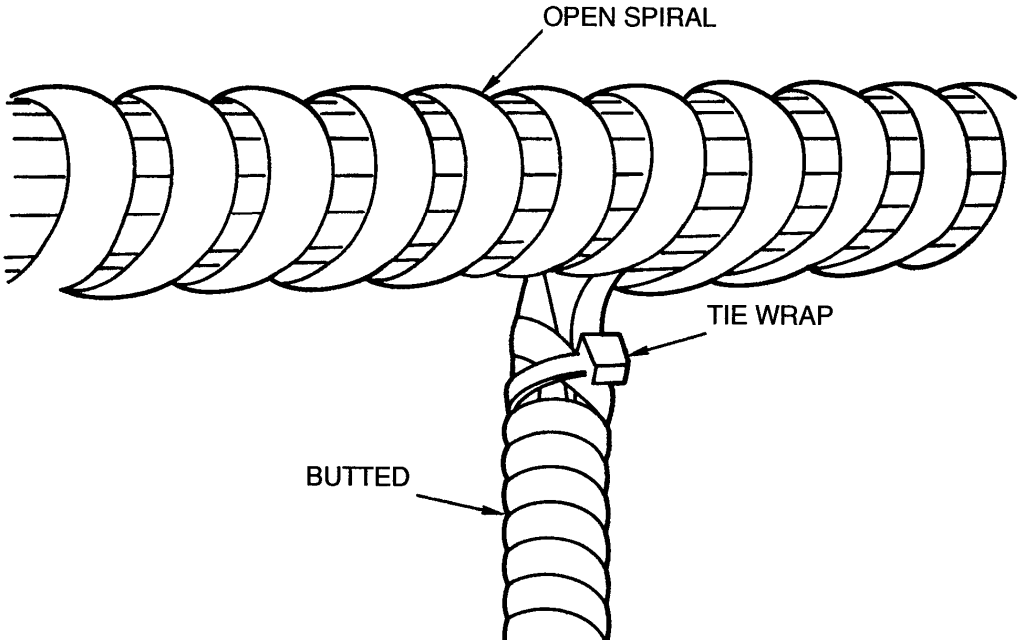

Figure 9-11. Spiral Wrap Sleeving

9.6 Plastic Straps

9.6.1 Installed straps shall be locked to prevent them from loosening or opening.

9.6.2 Straps shall be placed on both sides of a breakout; otherwise, spacing between straps shall be as required by Table 9-1.

9.6.3 The "ribbed" side of a strap shall always be placed against the wires.

9.6.4 Straps shall be tightened so that they do not slide back and forth on the assembly; however, they shall not be so tight as to cause noticeable indentation or distortion of the wires in the harness. Proper strap orientation is shown in Figure 9-12.

9.6.5 Plastic straps are usually installed by tooling. Tooling shall be tension-controlled to meet the strap-tightening requirements previously stated.

9.6.6 Surplus strap ends shall be trimmed flush at the back end of the strap head (this is done automatically by most tooling).

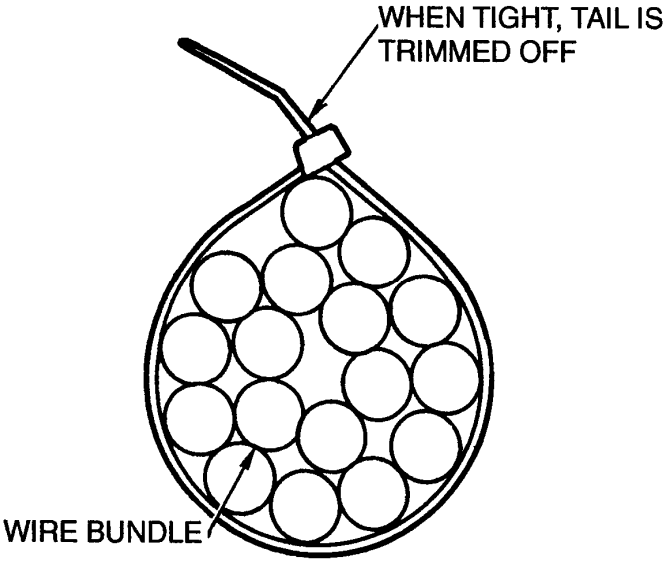

Figure 9-12. Plastic Strap Orientation

9.7 Metal Braid Shielding

9.7.1 Metal braid shielding can either be woven directly over a core or obtained in prebraided form and installed by sliding it over the wire bundle. To prevent potential damage (cold flow) of the underlying wire insulation, a separator (e.g., a tape) shall be applied over the wire bundle to give the wire continuous protection.

9.7.2 Prewoven braiding shall be tightened down to contact the wire bundle.

9.7.3 Braids shall be terminated as specified by the engineering documentation.

9.7.4 Prewoven metallic braid shall be cleaned in a suitable solvent to remove contamination prior to installation over the harness (see Chapter 15).

9.8 Insulation Sleeving/Tubing

9.8.1 Insulation sleeving shall be installed on all terminations that are not otherwise insulated or potted, except those at ground potential (e.g., overall shield and coaxial cable terminations).

9.8.2 Insulation sleeving shall be installed to meet the dimensional requirements of the applicable drawing or specification.

9.8.3 The following requirements apply to heat-shrinkable sleeving:

a. The heat-shrinkable sleeving selected shall be larger than the maximum diameter of the object being covered, and after shrinking it shall provide a tight fit over the object in the area of maximum diameter. This will cause the sleeving to have a tight mechanical grip on the item it covers. A guide for selecting sleeving sizes is given in Table 9-3.

b. There shall be no partially or incompletely shrunken areas.

c. Sleeving may have a slight surface crazing, but it shall be free of cracks, punctures, and charred or burned areas.

9.8.4 Tubing. Tubing shall be secured by spot ties or otherwise restrained to prevent them from sliding back and forth over the wire bundle.

9.8.5 Insulation tubing shall extend beyond the wire or cable insulation or jacket, respectively, a minimum of two times (2X) the diameter of the larger of the two. See 19.2.6 for this requirement as applied to splices.

Table 9-3. Selection Guide for Use of Polyolefin and Polyvinylidene Fluoride Sleeving [in mm (inches)]

I.D. As Supplied	I.D. Recovered (After Heating)	Cable Diameter	Sleeving Size
1.2 (0.046)	0.6 (0.023)	0.30 to 0.70 (0.01 to 0.026)	1.2 (3/64)
1.6 (0.063)	0.8 (0.031)	0.71 to 1 (0.028 to 0.038)	1.6 (1/16)
2.4 (0.093)	1.2 (0.046)	1.01 to 1.40 (0.039 to 0.54)	2.4 (3/32)
3.2 (0.125)	1.5 (0.061)	1.41 to 2.00 (0.055 to 0.077)	3.2 (1/8)
4.7 (0.187)	2.4 (0.093)	2.01 to 2.80 (0.078 to 1.109)	4.8 (3/16)
6.4 (0.250)	3.2 (0.125)	2.81 to 4.00 (0.110 to 0.156)	6.4 (1/4)
9.5 (0.375)	4.7 (0.187)	4.01 to 5.50 (0.157 to 0.218)	9.5 (3/8)
12.7 (0.500)	6.4 (0.250)	5.51 to 7.90 (0.219 to 0.312)	12.7 (1/2)
19.1 (0.750)	9.5 (0.275)	7.91 to 11.10 (0.313 to 0.437)	19.1 (3/4)
25.4 (1.000)	12.7 (0.500)	11.11 to 15.90 (0.438 to 0.625)	25.4 (1)
38.1 (1.500)	19.1 (0.750)	15.91 to 22.2 (0.626 to 0.875)	38.1 (1-1/2)
50.8 (2.000)	25.4 (1.000)	22.21 to 31.80 (0.876 to 1.250)	50.8 (2)
76.2 (3.000)	38.1 (1.500)	31.81 to 44.50 (1.251 to 1.750)	76.2 (3)
101.6 (4.000)	50.8 (2.000)	44.51 to 63.5 (1.751 to 2.500)	101.6 (4)

1/ The 2:1 shrink ratios shown apply to commonly used polyolefin sleeving (AMS DTL-23053/5 and /6) and polyvinylidene fluoride sleeving (PVDF) (AMS DTL 23053/8). Other shrink sleeving such as fluorinated ethylene propylene (FEP) (AMS-DTL-23053/11), polyethylene terephthalate (PET) (AMS-DTL-23053/7), and extruded polytetrafluoroethylene (PTFE) (AMS-DTL-23053/12) have different shrink ratios, and the applicable specification should be consulted.

9.9 Installation of Heat-Shrinkable Sleeving

9.9.1 After the sleeving has been placed over the object to be covered, it shall be heated and shrunk using a hot air gun, an oven, or radiant heating.

9.9.2 The degree of heat used and the exposure time will depend on the size and type of sleeving. A typical shield termination is shown in Figure 9 13. Sleeving coverage dimensions are given in this figure. If a tight fit is required for the minimum diameter, additional sleeving may be required.

Note: CAUTION: EXTREME CARE SHOULD BE EXERCISED TO ASSURE THAT THE AMOUNT OF HEAT APPLIED IS NOT DETRIMENTAL TO THE OBJECT BEING COVERED. WHEN OTHER TEMPERATURE-SENSITIVE MATERIALS AND PARTS ARE IN THE VICINITY, THEY SHOULD BE PROTECTED FROM EXPOSURE TO DIRECT HEAT.

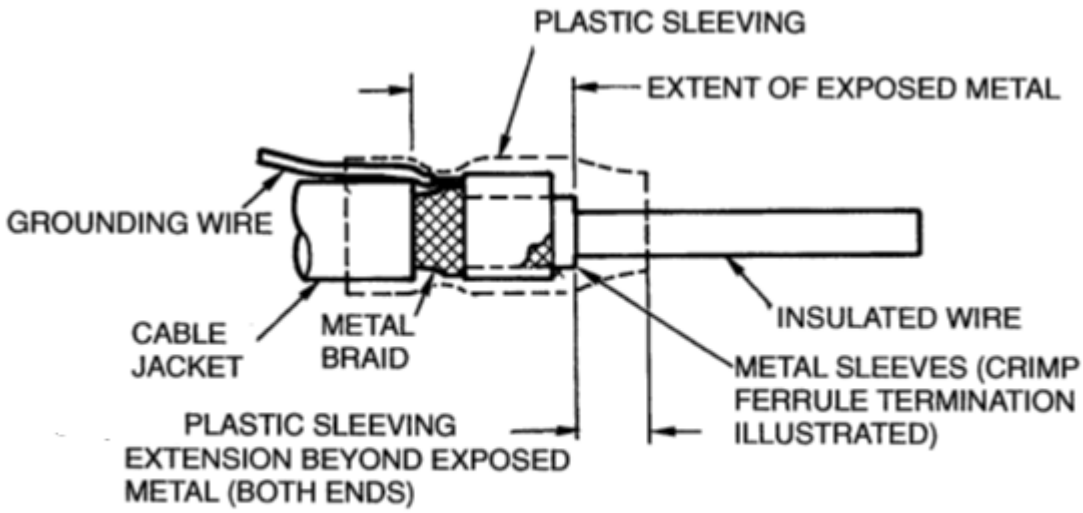

Figure 9-13. Illustration of Shrink Sleeve Installation (Typical)

9.10 Long Lengths of Shrinkable Sleeving

9.10.1 Long lengths of shrinkable sleeving installed over interconnecting harnesses and cables shall provide protective coverage of the designated area without leaving residual stress in the material.

9.10.2 The sleeving shall be in contact with the interconnecting harness or cable along its length. One method of controlling endwise shrinkage (reduction in length) of the sleeving during installation is shown in Figure 9-14.

Note: Medium to long lengths of harnesses/cables with shrink sleeving are extremely difficult to bend and coil without damage.

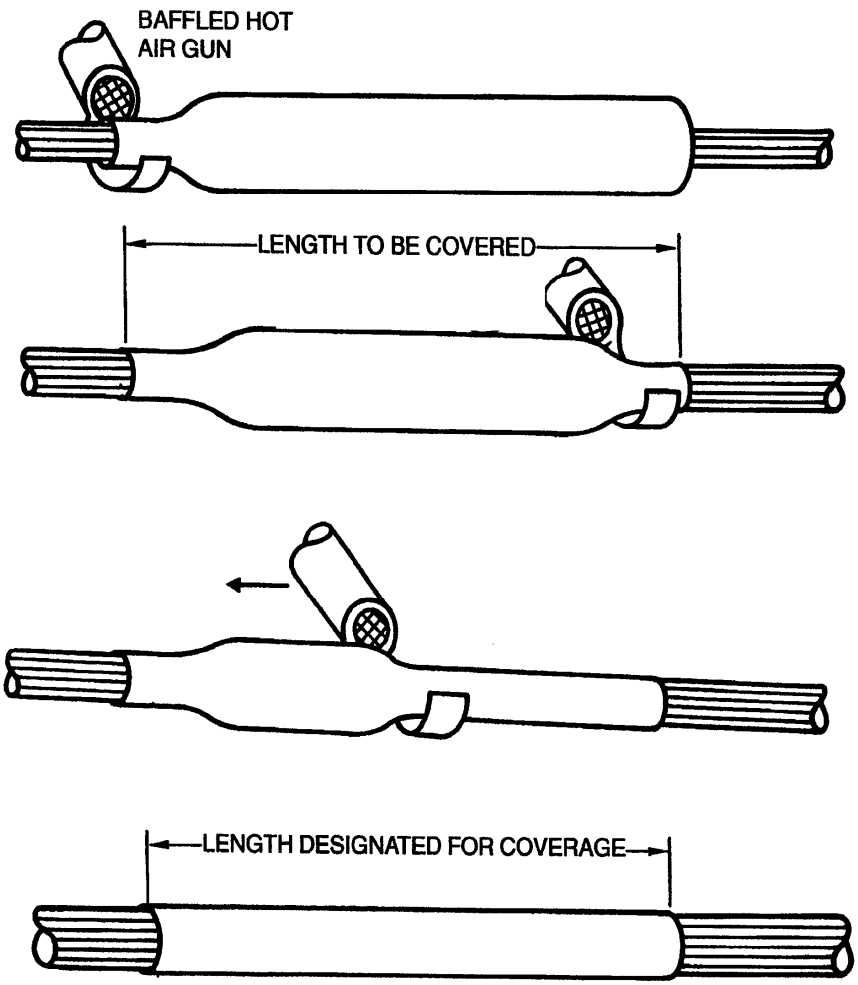

Figure 9-14. Installation of Long Lengths of Sleeving to Achieve Controlled Dimensions

9.11 Shrinkable Part Requirements and Installation

9.11.1 Shrinkable parts shall meet the following requirements (see Figure 9-15 for typical sleeving installation):

a. They shall be uniformly shrunk to assure a tight fit where required.

b. The part shall be positioned according to drawing or specification requirements.

c. The shrinkable sleeving shall firmly grip the item over which it has been installed.

d. The shrinkable part shall be free of cracks, punctures, blisters, and burned areas.

9.11.2 When shrinkable parts are installed, the gripping section of the part is shrunk first (For example, the gripping-end section of a connector backshell boot is shrunk over the connector before the smaller cable-gripping end is heated).

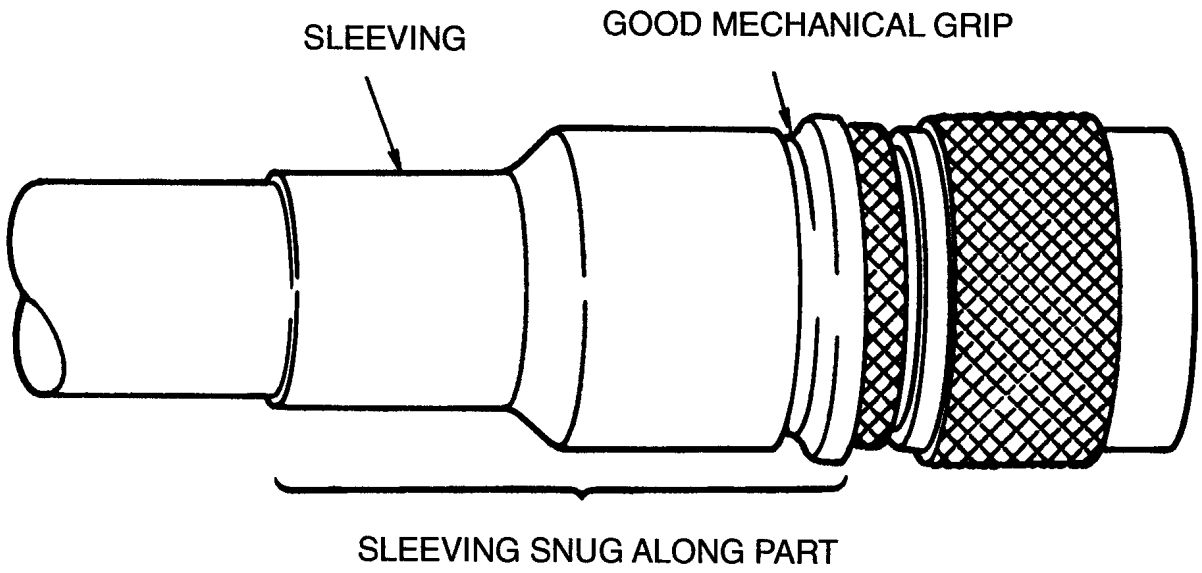

Figure 9-15. Sleeving Installation (Typical)

10. STRIPPING INSULATION FROM CONDUCTORS AND CABLE

10.1 Stripping Round Conductors

10.1.1 Insulated wires shall be prepared in accordance with the following requirements:

a. After removal of the insulation segment, the remaining conductor insulation shall not exhibit any damage such as nicks, cuts, crushing, or charring.

b. Conductors with damaged insulation shall not be used.

c. Scuffing from mechanical stripping or slight discoloration from thermal stripping is acceptable.

d. After removal of the conductor insulation, the conductor shall not be nicked, cut, or scraped to the point that base metal is exposed.

e. Conductors that were reduced in the cross-sectional area shall not be used.

f. The lay of wire strands shall be restored as nearly as possible to the original lay if disturbed.

g. The conductor shall be cleaned following restoration to the original lay.

10.1.2 The following requirements apply to tinning of conductors for solder cups:

a. The portion of stranded wires that will eventually become a part of the finished solder connection shall be coated with tin-lead solder and cleaned prior to attachment. Additional flux may be used.

b. The flux shall be applied so that it does not flow under the insulation except for traces carried by solder wicking.

c. Flux shall be removed with cleaning solvent applied so that its flow under the conductor insulation is minimal.

d. Wire strands shall be discernible after tinning.

e. Solder wicking shall not extend to a portion of the wire which is required to remain flexible.

f. Solder build-up or icicles within the tinned wire area shall not affect subsequent assembly steps.

g. The length of untinned strands measured from the end of the tinned portion to the beginning of the wire insulation shall not be greater than 1 wire diameter.

10.1.3 Insulation Irregularity. Mechanical or thermal stripped insulation irregularity is acceptable if it does not exceed 1/4 of the outside diameter of the wire, including the insulation.

10.1.4 Insulation Clearance. The following requirements apply:

a. Soldered Connections.

(1) The insulation shall not be imbedded in the solder joint.

(2) The contour of the conductor shall not be obscured at the termination end of the insulation.

(3) The insulation clearance shall be less than two wire diameters, including insulation, but in no case shall permit shorting between adjacent non-electrically common conductors.

(4) Insulation clearance shall be referenced from the first point of contact of the conductor to the terminal.

b. Crimped Connections.

(1) The minimum insulation clearance for all crimped connections shall be 0.25mm (0.01in.).

(2) The maximum insulation clearance for conductors 20AWG and smaller shall be 0.75mm (0.03in.).

(3) The maximum insulation clearance for conductors 18AWG and larger shall be 1.25mm (0.05in.).

10.2 Stripping Jackets Over Shields

10.2.1 Jackets over shields may be stripped by either thermal or mechanical means.

10.2.2 Nicked shield strands shall not exceed 10 percent of the total number of strands.

10.2.3 There shall be no severed strands in the shield.

10.3 Stripping Flat Conductor Cable

10.3.1 Flat conductor cable shall be stripped by mechanical means.

10.3.2 Conductors shall not be nicked, gouged, necked down, or severed during stripping.

10.3.3 After removal of the insulation segment, the remaining conductor insulation shall not exhibit any damage such as nicks, cuts, or crushing. Scuffing from mechanical stripping is acceptable.

11. CABLE SHIELDING AND SHIELD TERMINATION

11.1 General

11.1.1 Interconnecting cables and harnesses shall be designed and constructed to minimize electromagnetic couplings between wires within the assembly that are sensitive to induced interference. The following cable styles are listed in order of increasing RFI/EMI control: twisted pair, shielded wire, single-braid coaxial cable, double-braid coaxial cable, triaxial cable, twisted-shielded quadrax cable. For harnesses, grounded copper braid is the most effective RF shielding.

11.1.2 On RF signal cables, both the inner conductor and outer conductor braid shall be electrically continuous (Figure 11-1).

11.1.3 Cable and harness shields shall be mechanically terminated (e.g. crimp rings, compression band).

11.1.4 Cable and harness shields shall be electrically grounded in accordance with the manufacturing instructions (e.g. pigtail, conductive backshell).

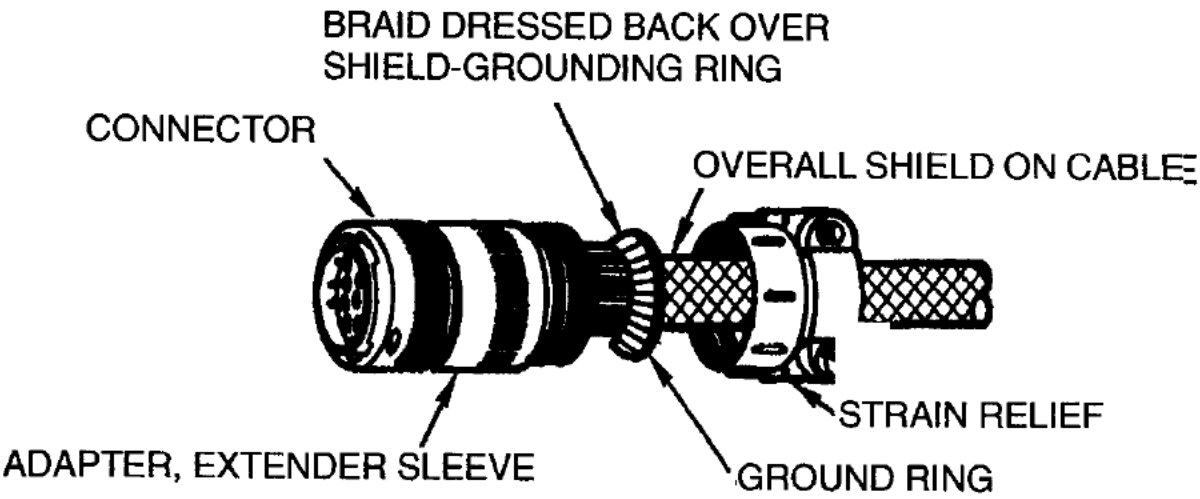

Figure 11-1. Terminating Overall Shield in RFI Adapter (Typical)

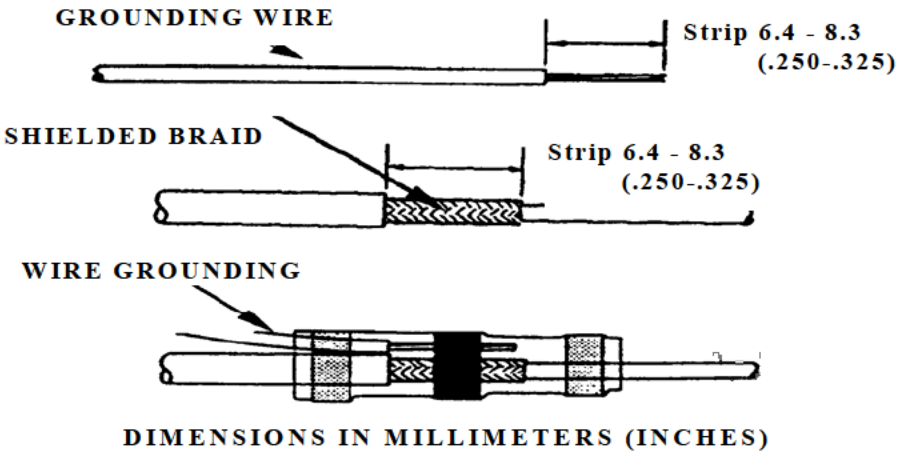

Figure 11-2. Example of Individual Shield Termination Using a Heat Shrinkable Solder Sleeve

11.2 Individual Shield Termination Using Two-Piece Crimp Rings

11.2.1 An individual shield that is terminated using two-piece crimp rings (ferrules) to attach grounding wires to the shield braid is shown in Figure 11-3. The inner crimp ring (ferrule) shall be sized so that any inward distortion caused by crimping will not affect the insulated wires it contains.

11.2.2 The end of the grounding wire shall be flush with the outer ferrule, and shall not overhang the inner ferrule.

11.2.3 The grounding wire detachment force from the crimped sleeve shall meet the requirements of paragraph 13.7.

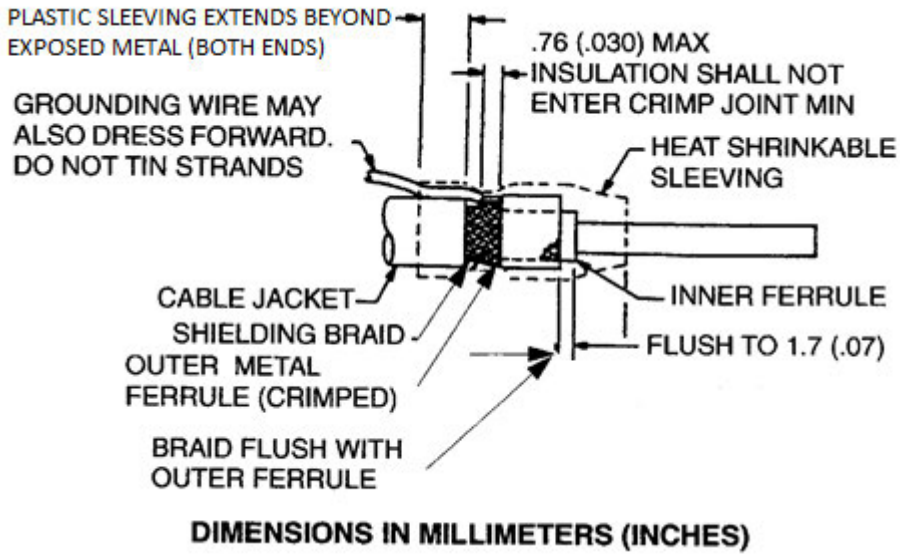

Figure 11-3. Individual Shield Termination Using a Two-Piece Crimp Ring

11.3 Group-Grounding of Individual Shield Terminations

11.3.1 When grounding wires of individual cable shields are grounded to one point, they shall be spliced to a common grounding wire.

11.3.2 No more than four conductors plus a drain wire shall be terminated in one splice (see Figure 11-4 and Figure 11-5).

11.3.3 For ordinary RFI/EMI protection, the shield shall be terminated within 100mm (4 inches) of the center conductor termination for the x-distance, and the combined length of shield grounding wires shall not exceed 190mm (7.5 inches) for the y-distance. For interference sensitive circuits, preferred lengths are 20 and 115mm (.75 inches and 4.5 inches). See Table 11 1 for the x and y distances. When this does not provide adequate isolation, RFI/EMI connector backshells may be necessary.

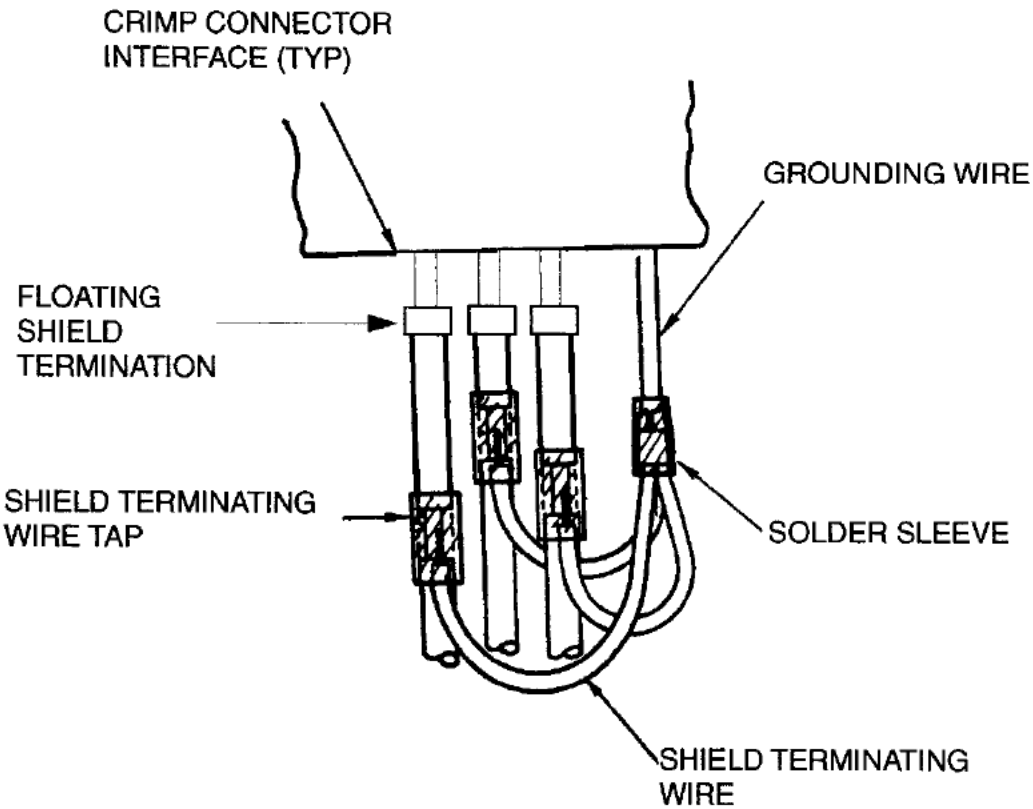

Figure 11-4. Example of Group Grounding of Staggered Shields

Table 11-1. Shield Termination Control for Group Grounding

Name of Circuit	X-Distance Max. mm (Inches)	X-Distance Min. mm (Inches)	Y-Distance Max. mm (Inches)
Interference sensitive	20.0 (0.75)	13 (.50)	115.0 (4.5)
Ordinary interference protection	100.0 (4.0)	13 (.50)	190.0 (7.5)

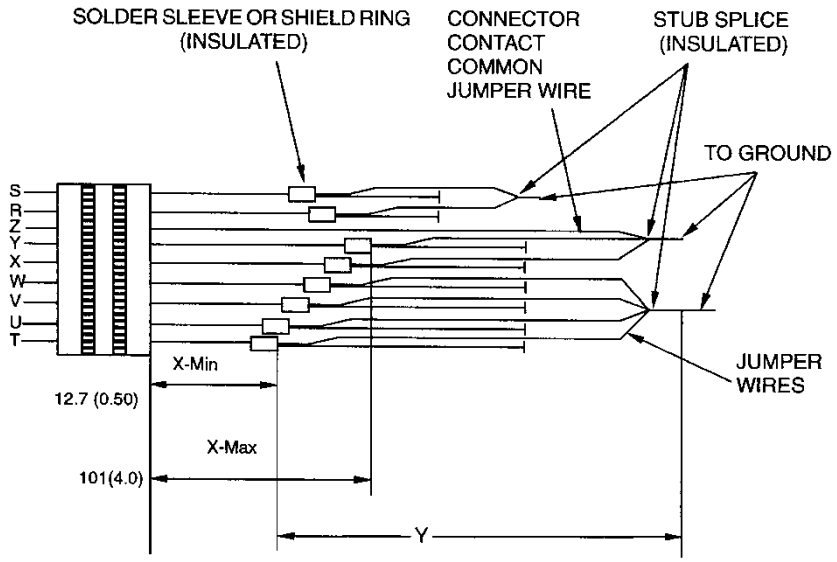

Figure 11-5. Group-Grounding of Individual Shield Terminations

11.4 Large Compression Ring Grounding

11.4.1 Individual shields and overall shields may be grounded using large compression rings. Shields should be dressed across the inner collector ring either forward towards the connector (Figure 11-6B) or backwards away from the connector (Figure 11-6C). Grounding wires shall exit the front or rear of the compression ring as required by design, and shall be formed in accordance with Figure 11-6A.

11.4.2 Grounding exiting the side of the compression ring away from the rear of the connector shall be dressed beneath the compression ring when terminating to a connector pin (Figure 11-6D). The outer compression ring shall be crimped securely over the shields and inner collector ring (Figure 11-6E).

11.4.3 The grounding wire detachment force from the crimped sleeve shall meet the requirements of paragraph 13.7.

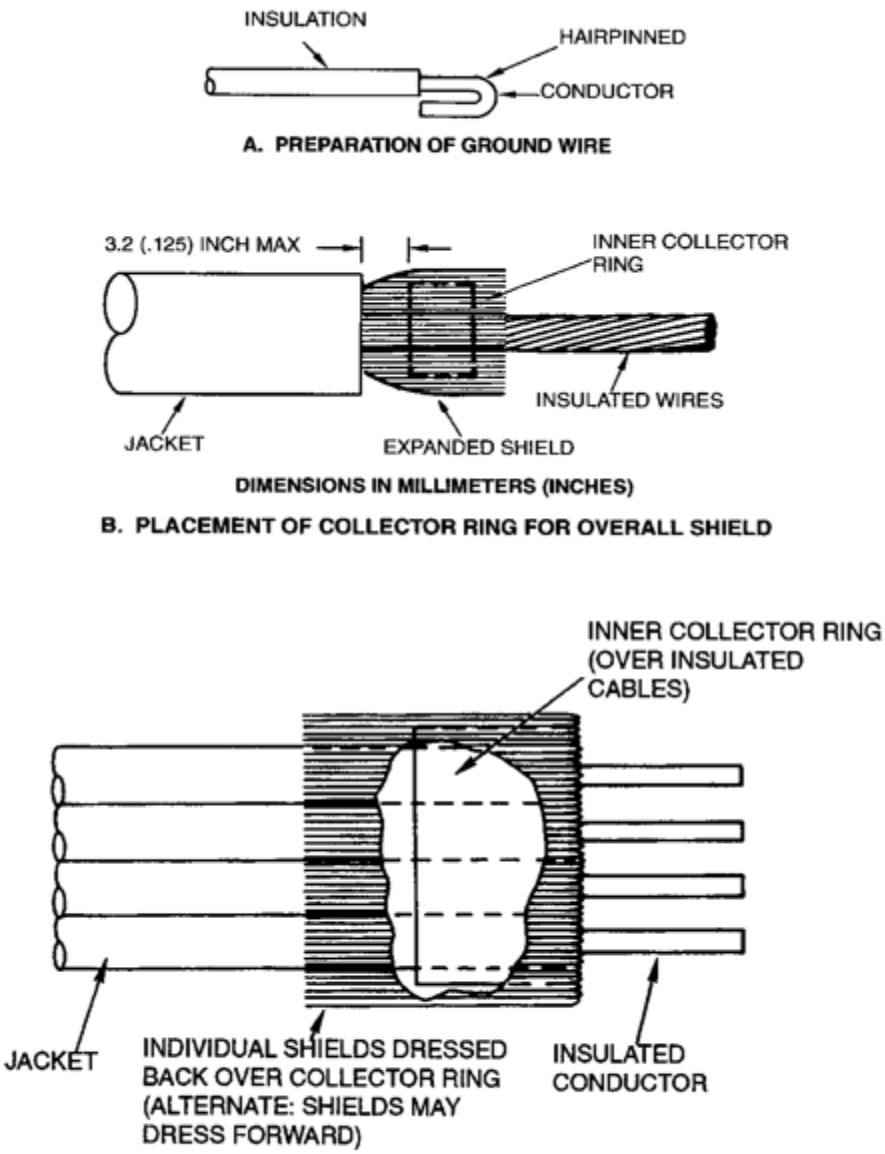

Figure 11-6. Large Compression Ring Grounding (Typical Applications)

11.5 Floating Shield Terminations

11.5.1 The outer jacket shall be trimmed to expose the shielding braid.

11.5.2 The braid shall be folded back over the outer jacket as illustrated in Figure 11-7.

11.5.3 Combing the braid is optional. Heat-shrinkable sleeving shall be installed over the trim point.

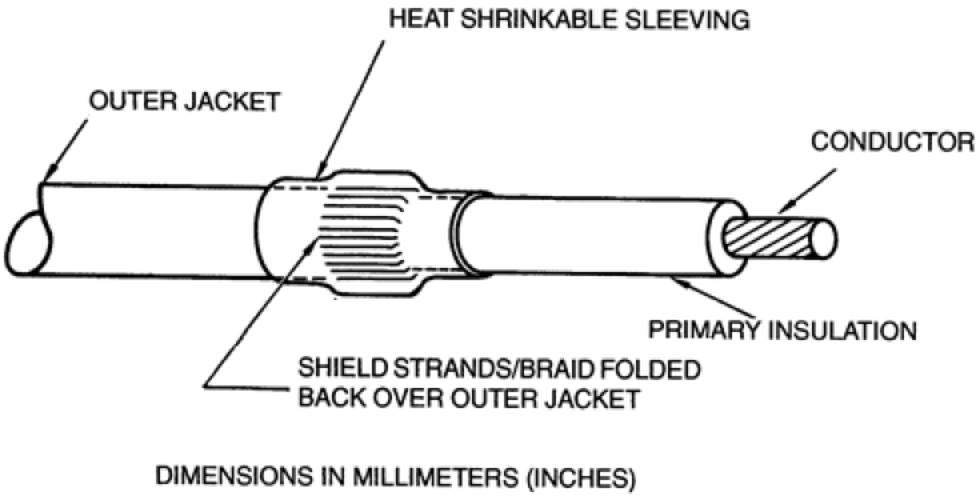

Figure 11-7. Floating Shield Termination

11.6 Unshielded Wire Exposure and Total Length of Grounding Wires

Exposed wire beyond a shield termination is subject to induced RFI/EMI interference. Any excessive length of grounding wire may act as an antenna in picking up interference. Distances to terminations and maximum lengths of grounding wires attached directly to an individual shield are given in Table 11-2 and illustrated in Figure 11-8. Shield terminations shall be staggered behind the connector/accessory 13mm (0.5 inch) minimum and 100mm (4 inches) maximum to assure minimum buildup of the wire bundle diameter in the shield termination area (see Figure 11-5).

Table 11-2. Shield Termination Control (Refer to Figure 11-8)

Nature of Circuit	X-Distance Recommended Max Length mm (Inches)	Y-Distance mm (Inches)
Interference sensitive1/	20 (0.75)	40 (1.5)
Ordinary interference protection	100 (4.0)	150 (6.0)

1/ It may be necessary to use conductive adapter backshells that provide full isolation to secure better RFI/EMI protection for extremely sensitive circuits.

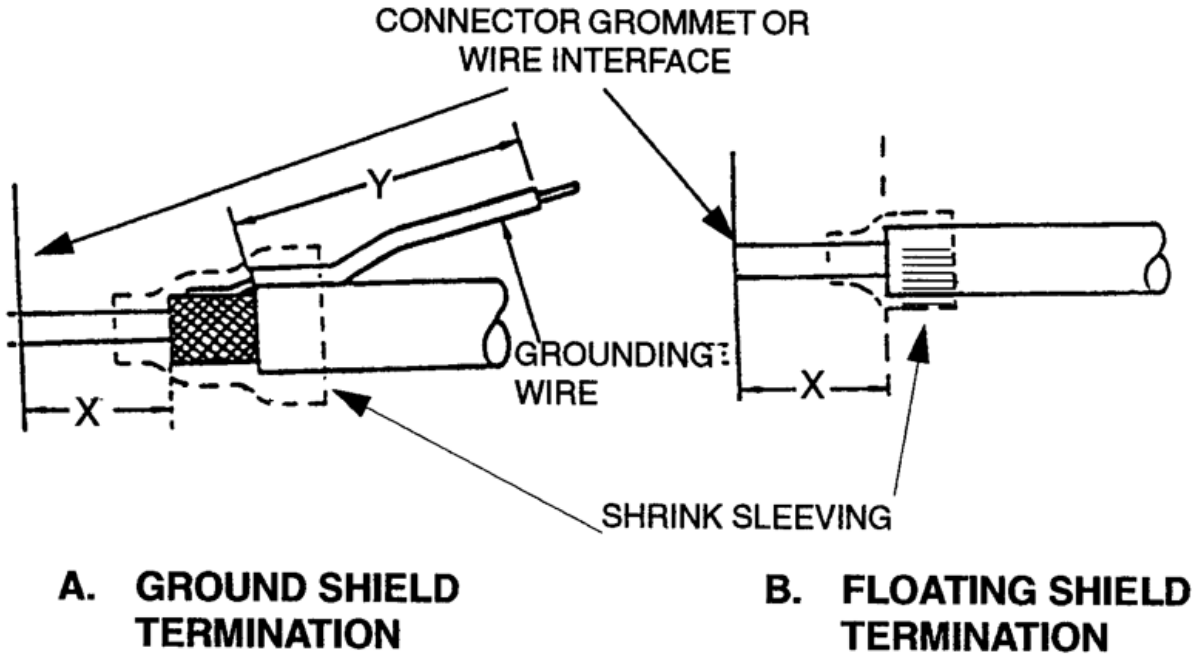

Figure 11-8. Conductor Exposure for Individual Shield Termination Types

12. CRIMP CONNECTIONS

12.1 General

12.1.1 Crimped connections shall be inspected 100 percent in order to verify compliance with this standard.

12.1.2 Insulation clearances shall be as specified in paragraph 10.1.1.b.

12.2 Examination of Crimp Contact

12.2.1 For manual crimping operations prior to wire insertion, the assembler shall examine the crimp contacts for the conditions in 12.2.2.

12.2.2 Contacts that show the following conditions shall be prohibited:

a. Cracks in the plating or base metal.

b. Tarnishing or discoloration of the plating.

c. Plating removal or flaking.

d. Out-of-roundness of the wire well entrance.

e. Exposed base metal.

12.3 Process Controls

12.3.1 Tool and Equipment Control.

a. Full-Cycle Ratcheting. Crimp tools shall contain a full-cycle ratcheting mechanism which shall prevent the indenters from releasing before the crimp cycle has been completed.

b. Number of Indenters. Each crimp tool shall have four or more indenter blades (preferably double-indenter blades).

c. Calibration Adjustments. The calibration adjustments shall be accessible only when the tool is disassembled.

d. Calibration adjustments shall be made only by the manufacturer of the tool or by a calibration laboratory.

e. Sealing of Adjustable Tools. All adjustable crimp tools shall be set, sealed or locked, and verified prior to use.

12.3.2 Examination of Crimp Tools.

a. If the tool is broken or damaged, it shall be removed from service.

b. Tools with a sealed setting and sealed locator or position. If the tool is broken or damaged, or if the seal is broken, the tool shall be removed from service.

c. Records of examination shall be maintained for hand tools.

12.3.3 Allowable Contact-Conductor Combinations. The contact-conductor combinations shall be in accordance with manufacturer's recommendations.

12.3.4 Contacts or conductors shall not be modified.

12.3.5 Integrity of Crimped Connections.

a. The following requirements apply for crimp process development when there is no recommended tool setting for the contact-conductor combination:

(1) For each new crimp process where a crimp tool setting must be determined for a contact-conductor pair (or a crimp ferrule-conductor combination), a three-sample pull test at each of the different crimp tool settings considered for use are required using the force and pull strength criteria in Table 12-1.

(2) The crimp tool setting that produces the maximum number of fray breaks and breaks outside the contact or crimp ferrule shall be used for assembly (see Figure 12-1).

(3) If multiple settings provide identical tensile strengths for a crimp joint, the setting selected shall be the one that provides more wire breaks than wire pullouts.

b. The following requirements apply for the production quality control test:

(1) The crimp tools and each contact-conductor, or crimp ferrule-conductor, combination to be used in a production run shall be tested at the start and at the end of each work shift or production run, whichever is shorter, using crimp pull testing. The test prior to a shift or production run can be skipped if the test had been done at the end of the prior shift or production run and no change to the tools has occurred since the last pull test. The test at the end of the shift may be skipped if it will be done at the start of the next shift or production run and no change to the tools will occur prior to the next test.

(2) The record of successful pull testing shall be traceable to the contact or ferrule, wire, crimp tool, crimp setting used and the production run or shift.

(3) Hardware produced prior to the failed pull test shall be identified as suspect and evaluated prior to use to assure it is defect-free.

(4) Production shall not proceed until there are zero failures out of three samples tested.

c. The following requirements apply for the Test Method and Failure Categories:

(1) The crimp contacts or ferrules shall be placed in a tensile-testing device with appropriate fixtures, and sufficient force shall be applied to pull the wire out of the assembly or to break the wire or crimped item.

(2) The head travel speed of the tensile device shall be 25.4 ± 6.3 mm (1.0 ± .25 in) per minute. The holding surfaces of the tensile device clamp may be serrated to provide sufficient gripping and holding ability.

(3) Crimp pull strengths shall meet the values in Table 12-1. Wire pull out, wire breaks at the crimp, and contact rupture which occur below the minimum pull strength value are considered test failures.

(4) For those contact-conductor crimp connections not contained in Table 12-1, the tensile strength of the crimp connection shall be no less than 60 percent of the tensile strength of the wire. Reference the manufacturer's datasheet for wire tensile strength.

(5) For crimp ferrule-conductor combinations the wire pulled shall meet the tensile requirement for a single wire of the same gauge being tested in its "properly sized" contact.

(6) Examination of Test Samples. Each individual test sample shall be inspected to the requirements of 12.3.5.c(3) and the observations should be recorded and maintained for passing units and shall be recorded for failing units.

(7) The pull strength and break or release condition for test failures shall be recorded.

d. Alternative quality control systems may be used for assuring crimp production lots when they are approved in advance in accordance with 1.4.3 or 1.4.4.

Table 12-1. Crimp Tensile Strength [1]

Copper, Conductor Size, AWG 2/	Tensile Strength, Newtons (Pounds), Minimum
28	22 (5)
26	36 (8)
24	36 (8)
22	57 (13)
20	92 (21)
18	142 (32)
16	183(41)
14	290 (65)
12	459 (103)
10	707 (159)
8	1281 (288)

1/ For contact-conductor combinations not listed in the table, the requirements of12.3.5.c(4) shall apply.
2/ Refers to copper and high strength copper alloy stranded conductors.

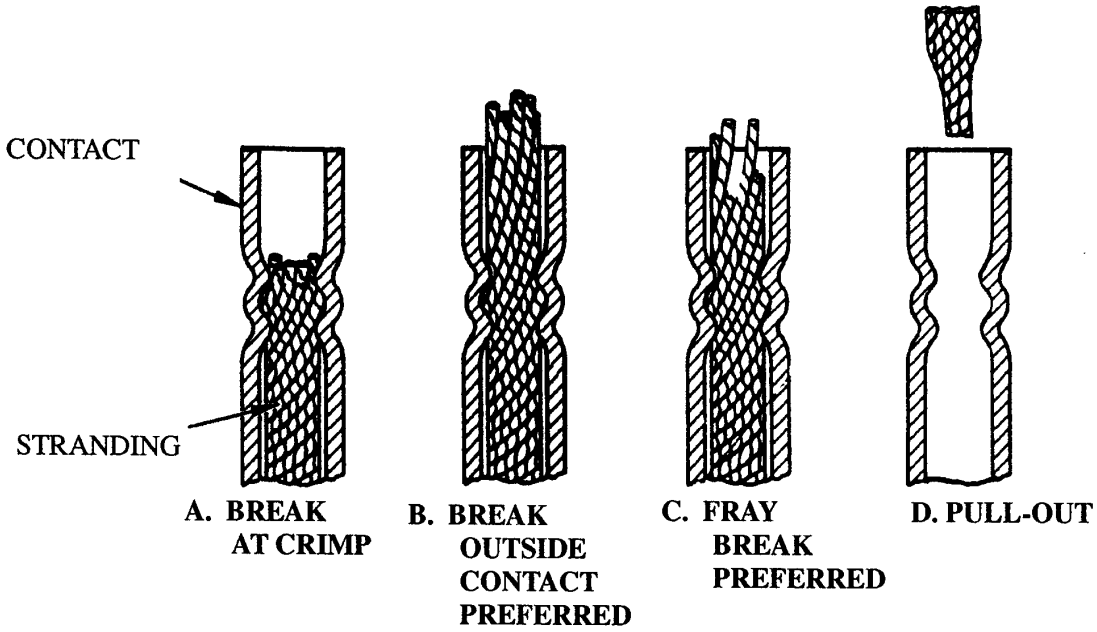

Figure 12-1. Crimp Joint Tensile Failure Categories

Note: All categories are acceptable if separation occurs above minimum tensile strength per 12.3.5.c.(3).

Note: Breaks at the entrance of the contact wire barrel, caused by conductor cutting because the contact is not held squarely in the tester jaws, shall not be preferred breaks.

13. CONNECTOR ASSEMBLY

13.1 General

13.1.1 Contact insertion and removal tools shall be non-metal.

13.1.2 During contact insertion operations, should part of the tip of a contact insertion tool break off, all pieces of the tip shall be accounted for.

13.1.3 The mating surfaces of all unmated connectors shall be protected by covers during storage, handling, and installation of interconnecting cables and harnesses.

13.2 Assembly of Crimp-Type Connectors (Including Terminal Junctions)

13.2.1 Crimp contacts are assembled to conductors outside of the connector and are subsequently installed into the connector body. When a connector is properly assembled, contacts are captured inside the connector. Retaining clips are one means of securing contacts in place inside connector cavities. When retaining clips are present, contacts shall be fully seated and locked into place by the clip.

13.2.2 Terminal junctions shall not have unwired contacts installed in unused cavities.

13.3 Assembly of Solder-Type Connectors

13.3.1 Wire shall be bent only in flexible, unwicked parts of the conductor to maintain stress relief for solder dipped conductors. In all instances, stranded conductors will experience solder-wicking during attachment. The conductor will be rigid up to the point where the wicking stops and flexible beyond it. Wire movement concentrates stress at the point where wicking stops and normal harness handling can produce conductor fatigue and failure.

13.3.2 Solid conductors shall be assembled in contacts by soldering, and cleaned and inspected in accordance with the latest revision of IPC J-STD-001FS.

13.3.3 Contact mating surfaces and solder joints shall be cleaned to remove flux residue following the soldering operation.

Note: CAUTION: WHERE SOLDER CONTACTS HAVE FLOAT, FLUX MAY RUN DOWN ONTO THE MATING SURFACE OF THE CONTACT DURING SOLDERING AND CAUSE INTERMITTENT AND OPEN CIRCUITS.

13.4 Assembly of Connectors with Non-Removable Solder Cups Including Hermetic and Environmental Types

13.4.1 Connectors with Non-Removable Solder Cups. When solder connections cannot be visually inspected due to their position out of the line of sight, alternative quality control

measures shall be taken to ensure that the solder joints are defect-free in accordance with the defect and inspection criteria of J-STD-001FS. Examples are interim visual inspection, x-ray inspection and process controls that drive minimum conductor insertion into the cup and solder fill and fillet conditions.

13.4.2 For environmental and hermetic connectors that have unremovable soldered contacts, solder joints, contact surfaces and the rear of the connector shall be cleaned to remove flux residue following soldering.

13.4.3 Plastic sealing plugs shall be used in all unwired contact cavities of environmental connectors for high humidity and moisture environments.

13.4.4 Sealing plugs shall be fully seated.

13.4.5 Grommet Sealing. When an insulated wire diameter is smaller than the grommet hole, the wire insulation diameter shall be increased by using heat shrinkable sleeving.

Note: Care should be used when using shrink sleeving. The outer diameter of the sleeving should be small enough to allow use of extraction/insertion tools.

13.5 Assembly (Torquing) of Adapters and Cable Clamps to Connectors

13.5.1 During assembly (torquing backshells, securing cable clamps/tongs, etc.), strain relief members shall not be stressed or forced to rotate.

13.5.2 Torque requirements shall be stated on the engineering documentation.

Note: CAUTION: CARE SHOULD BE EXERCISED WHEN POSITIONING AND TORQUING CONNECTOR BACKSHELL TONGS, STRAIN RELIEF CLAMPS AND OTHER STRAIN RELIEF MEMBERS. THE PROPER POSITIONING OF THESE DEVICES WILL PREVENT THE SHARP BENDING OF AND SUBSEQUENT DAMAGE TO HARNESSES DURING THEIR INSTALLATION OR OPERATIONAL USE.

13.6 Assembly of RF Connectors and Coaxial Contacts

Many types of RF connectors and coaxial contacts are available. Electrical performance, together with other considerations, affects the selection of the connector and coaxial cable. Depending on the requirements, assembly procedures vary from normal shop practice for cables operating at less than 1 gigahertz (GHz) to precision techniques for those operating up to 18 GHz. See Appendix B for a discussion of frequently encountered workmanship problems related to the assembly of RF connectors and coaxial contacts. The following practices shall be observed:

a. Connectors shall not be modified.

b. Special tools necessary for the fabrication shall be specified on the assembly procedures.

c. Torque values, when applicable, shall be specified on the engineering documentation.

13.7 Process Controls for Two-Piece Crimp Rings and Stub-Type Splicing Devices

13.7.1 The crimp tools and crimped ring conductor(s) combination to be used in a production run shall be tested at the start and at the end of each work shift or production run, whichever is shorter.

13.7.2 Test results shall be recorded and maintained for each applicable crimp tool, crimped ring conductor(s) combination, and production period or shift.

13.7.3 Number of Test Samples. Three or more test samples shall be prepared and tested for each crimp tool and crimped ring conductor(s) combination, at the intervals specified in 13.7.1.

13.7.4 Test Method. The sample crimp rings and stub-type splicing devices shall be placed in a tensile-testing device with appropriate fixtures, and sufficient force shall be applied to pull each individual wire to the value specified in Table 13-1 without movement or pulling of the wire from the crimped ring or breaking of the wire or the crimped ring. The head travel speed of the tensile device shall be 25.4 ± 6.3 mm (1.0 ± .25 in) per minute. The holding surfaces of the tensile device clamp may be serrated to provide sufficient gripping and holding ability.

13.7.5 The tensile strength of the crimp test sample connections shall be in accordance with Table 13-1.

13.7.6 For those crimped ring conductor(s) combinations not contained in Table 13-1, the tensile strength of the crimp connection shall be no less than 60 percent of the tensile strength of the wire.

13.7.7 Records of the observations of the passing test samples should be recorded and maintained and for failing samples shall be recorded and maintained.

Table 13-1. Pull Force [1]

Grounding Lead Wire Size		Applied Force Minimum Newtons (Pounds)	
AWG 24	Copper	36	(8)
AWG 22	Copper	57	(13)

1/ For wire sizes not listed, the minimum applied force shall be 60 percent of the tensile strength of the wire being pulled.

13.8 Inspection and Verification Testing

The following inspections and verifications of assembled connectors are required:

13.8.1 Visual Examination. One hundred percent visual inspection shall be conducted for acceptable soldering, proper identification, and freedom from damage.

13.8.2 Contact Seating. Each contact in connectors utilizing retention clips or tines shall be push or pull tested 100 percent for seating.

13.8.3 Contact seating testing shall be limited to one push or pull test per contact insertion.

13.8.4 The contact seating test results shall be recorded.

13.8.5 The following requirements apply for push testing:

a. In applications in which the engaging (mating) ends of the pins or socket contacts are accessible, contact retention testing to the requirements of Table 13-2 shall be performed.

b. Push testing shall utilize a tool that minimizes chafing, scraping and bending of contacts and applies a controlled, preset pressure to the contact before releasing the force. A typical tool design is shown in Figure 13-1.

c. Socket testing probes shall be undersized compared to mating-pin diameters and shall not cause a mating cycle to take place.

Table 13-2. Contact Retention Test Forces

Contact sizes	Push Test Force (Newtons (Pounds)	Pull Test Force Newtons (Pounds) 1/, 2/
22, 22D and 22M	17.8 to 26.7 (4 to 6)	13.3 to 22.2 (3 to 5)
20	22.2 to 31.1 (5 to 7)	13.3 to 22.2 (3 to 5)
16	35.6 to 44.5 (8 to 10)	17.8 to 31.1 (4 to 7)
12	44.5 to 53.4 (10 to 12)	17.8 to 31.1 (4 to 7)

1/ Wire shall not be pulled to a force in excess of 80 percent of the specified minimum crimp tensile requirement. This requirement shall be met to avoid damage to the wire/contact crimp joint.
2/ These forces are based on wire size AWG 24. If smaller wire is used these values should be adjusted accordingly.

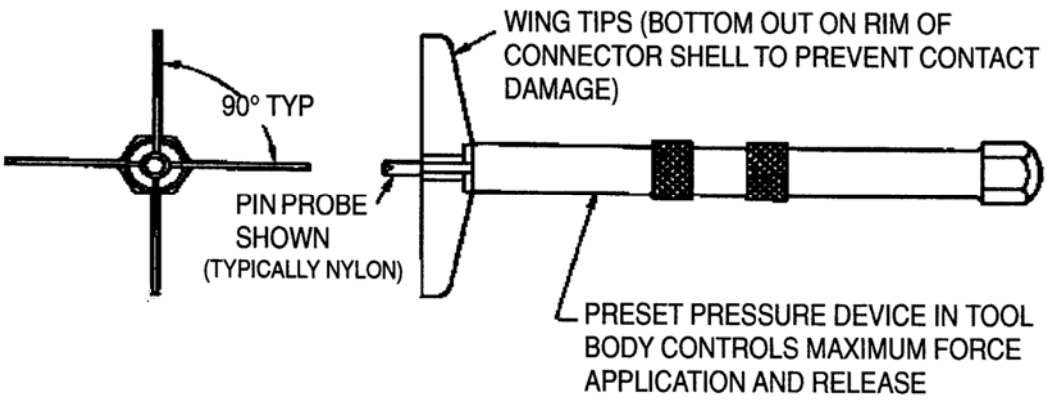

Figure 13-1. Typical Push Test Tool

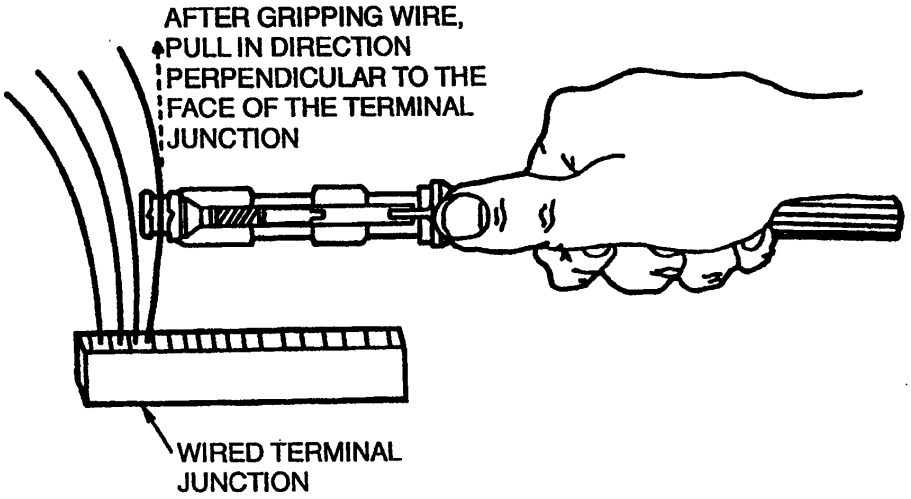

Figure 13-2. Application of Retention Tool for Gripping Wire (Typical)

13.8.6 The following requirements apply for pull testing:

a. On terminal junctions and certain insertable crimp-contact connectors, contacts are not exposed for push testing. Pull force contact retention testing to the requirements of Table 13-1 shall be performed only on devices in which the contact engaging (mating) ends are not accessible.

b. Pull force testing shall be performed by pulling on the wire terminated in the contact as illustrated in Figure 13-2.

c. The wires to be pulled (except for shielded wire) shall be free of ties, cable clamps, or any wire-harness shielding devices within 127 mm (5 inches) of the terminal junction sealing grommet surface (see Figure 13-2).

d. When the wire breakout to the terminal junction is less than 127 mm (5 inches) in length, then ties and clamps may be removed only to the point where the wires leave the main bundle.

e. The wire shall be pulled perpendicular to the wire exit face of the connector device.

Note: When the wire is pulled at any angle exceeding 5° from the perpendicular, the contact may bind inside the connector and give a false reading.

f. The wire shall not be pulled to a force in excess of 80 percent of the specified minimum crimp tensile requirement in order to avoid damage to the wire/contact crimp joint.

g. When a shielded wire is being pulled, the wire shall be gripped between the rear of the connector and the shield termination.

13.8.7 Solder Contacts. All solder contacts that have float shall be free of flux and other contamination and should be checked to assure they have normal float characteristics after soldering and cleaning.

13.8.8 Coaxial Cable Requirements. Coaxial cables shall pass electrical requirements (e.g., voltage standing wave ratio (VSWR), insertion loss, and other performance tests specified on the engineering documentation).

13.8.9 Prior to assembly or installation, the following inspections shall be conducted, as appropriate:

a. Verify proper strip length and assembly of center conductor into contact.

b. Verify proper securing of the outer conductor.

c. Verify that the center contact location meets requirements for proper mating.

d. Visually verify undamaged condition of mating surfaces and coupling means.

13.8.10 Torque applied to connector backshells, strain relief clamps, etc., shall be as specified in the engineering documentation.

14. HARNESS IDENTIFICATION

14.1 General

14.1.1 Each cable and each harness shall be permanently identified.

a. The identification marking shall be capable of passing all environmental testing that may be required for the projected use and remain legible.

b. Each connector shall be identified.

c. Connector identification may be placed directly on the connector or on the cable near the connector.

d. In all cases, identification shall resist abrasion, either as applied or with the aid of an overcoat.

e. All temporary identification shall be removed from each completed harness by the end of the fabrication process.

f. Marking tape used to position and locate harnesses and cables may be either permanent or temporary in nature.

g. Permanent type marking tapes shall meet environmental requirements.

h. Identification shall be verified visually by the responsible Quality Representative or designee for correctness, legibility, size, and proper location.

15. INTERCONNECTING HARNESS AND CABLE CLEANING

15.1 General

15.1.1 Interconnecting cable and harness assemblies shall be clean and free of contamination prior to installation in the mission hardware system (e.g. aircraft, instrument, spacecraft).

a. Assurance of cleanliness shall be an ongoing effort.

b. Practices for mission assemblies shall include assembly in a clean environment and the use of protective plastic sheeting or other coverings over harnesses not undergoing active assembly.

15.2 Cleaning the Harness Assembly

15.2.1 Particles and debris shall be cleaned from the harness or cable assembly by vacuum-removal methods.

15.2.2 Selection and use of solvents for cleaning harnesses shall comply with the requirements of NASA-STD-8739.6.

15.2.3 Brushing with solvent shall be used as required to remove other contamination. Aqueous solvents should be avoided when cleaning assemblies containing silver-coated copper wire to reduce the risk of corrosion (i.e. cuprous oxide formation at silver/copper interfaces in the presence of moisture known as red-plague).

15.2.4 Cable and harnesses that contain foamed or expanded structure insulation shall be baked after cleaning with alcohol to ensure entrapped volatile substances are liberated before electrical testing is performed. Use of 60°C in air for 2.0 hours minimum is recommended.

15.2.5 Only solvents as per paragraph 6.9 shall be used.

15.3 Cleaning Harness Connectors

15.3.1 The following cleaning procedures shall be used with connectors:

a. Solvent cleaning by brushing or vacuum methods may be used

b. Flux residue, solder splash, metal flakes, moisture, and other contaminants that may jeopardize the integrity of the connector system shall be cleaned from contact surfaces of pins, sockets, and connector bodies (See Figure 15-1).

c. Crimp-type multipin and coaxial electrical connectors shall be solvent-cleaned by brushing before assembly to the harness or unit cable.

d. The internal surfaces of dust covers and connector covers shall be cleaned by solvent brushing before the covers are fitted onto cleaned connectors.

e. If necessary, connectors that were subjected to frequent mating and demating operations during fabrication and test shall receive additional cleaning prior to the final mating.

f. Visual examination of the contact surfaces of connectors shall not reveal the presence of contaminants such as metal flakes or large dust particles.

15.4 Cleaning Coaxial Connectors (Assembled)

15.4.1 Coaxial connectors shall not have accumulated contaminants such as metal flakes, dirt, moisture, and other foreign materials.

15.4.2 The connector interface shall be cleaned by brushing with solvent, vacuum procedures, or a combination thereof until the contaminants have been removed.

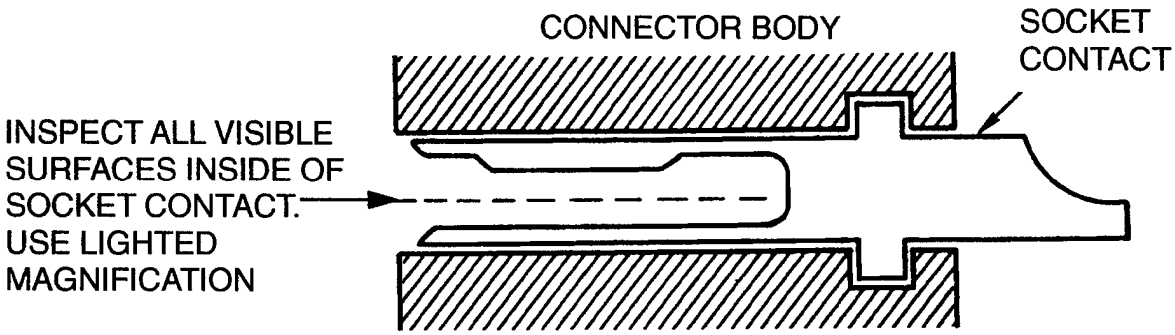

Figure 15-1. Visual Examination Inside the Socket Contact for Flux Residue

16. INTERCONNECTING HARNESS AND CABLE HANDLING AND PROTECTION

16.1 General

16.1.1 Interconnecting harnesses and cables often receive their maximum stresses when they are moved, handled, or installed in their permanent locations. Harnesses should be handled with considerable care and attention.

16.1.2 Prior to installation, large harnesses shall be kept on their own wiring board or otherwise protected from damage or misuse.

16.1.3 After the cleanliness of the connector has been verified visually, it shall be protected with a clean dust cover until it is ready for final mating.

16.1.4 All unmated connectors shall be protected with clean dust covers (connector caps).Bags or containers used to store assembled harnesses containing fluoropolymer insulated wire (e.g. Polytetrafluoroethylene (PTFE), Fluorinated Ethylene Propylene (FEP)) shall be vented to prevent corrosion of metal surfaces from fluorine outgassing.

16.1.5 Overstressing and excessive flexing of wires shall be avoided during connector cleaning and mating and demating operations. This is especially important for solder-type connectors.

17. CONNECTOR MATING

17.1 General

Although most electrical connectors are considered to be durable, each of them has a finite life. During testing and system checkout, certain connectors may be subject to frequent mating and demating. When this situation exists, wear and potential damage can be reduced by the use of “connector-savers”. Connector-savers transfer the wear from the flight connector to non-flight jumper harness connectors. It also prevents uncontrolled (and possibly damaged) test equipment connectors from mating directly with the mission hardware.

17.1.1 Any connector, including connector savers, mating with flight hardware shall be in accordance with engineering documentation.

17.2 Connector Mating and Demating

17.2.1 The following practices and precautions shall be exercised in mating and demating connectors:

a. Verification that the circuit has been de-energized shall be performed prior to connector mate and demate operations (not applicable to circuits containing batteries).

b. Prior to mating, connectors shall be examined for contamination, and pin, socket, grommet and connector body damage.

c. All flight qualified, AC/DC power interface and test equipment connectors that mate with flight and support equipment connectors shall be protected against damage and contamination during mating and demating operations, and when they are in a demated condition.

d. Caution shall be applied to mating and demating operations to preclude damage to connectors. In some cases a demating tool may be utilized.

e. Harness connectors mated to test tees or breakout boxes shall be provided with stress relief to restrict flexing of connectors and cables.

f. Mate and demate operations between the flight hardware, support equipment connectors, system test equipment, and also in final assembly shall be performed by authorized personnel only.

g. The use of connector savers is recommended (see 17.1). A connector saver can be a short harness jumper that has a mating interface connector to engage the unit. The other end of the harness has the same interface as the unit. Connector savers shall be clearly marked.

h. Connector savers shall meet the same requirements as a flight connector.

17.2.2 Interfacial seals, which are not bonded to the connector shall be examined and, if necessary, replaced with new, clean seals prior to final mating.

17.2.3 Use of a log of mate and demate operations and of occurrences of bent pins is recommended for all connectors that are part of mission hardware.

17.2.4 Flight connectors shall be torqued as specified on engineering documentation.

17.2.5 Electrostatic discharge (ESD) protective caps shall be installed on exposed connectors of harnesses that are attached to ESDS hardware.

17.3 Coaxial Connector Mating

17.3.1 The torque value use when mating coaxial connectors shall be defined in the engineering documentation. The connector datasheet or manufacturer's application notes are the recommended primary source for this torque value.

17.3.2 When mating coaxial connectors, the cable assemblies shall be held such that only the connector coupling is rotated.

Note: CAUTION: THERE SHOULD BE NO RELATIVE MOTION OF THE CABLES OR THE CONNECTOR BODIES WHILE THE CONNECTOR IS BEING TORQUED.

18. TESTING AND INSPECTION

18.1 General

18.1.1 Completed interconnecting harnesses and cables shall be verified as meeting all applicable functional, electrical, and design requirements.

18.2 Testing

18.2.1 All cable assemblies shall meet the Continuity, Dielectric Withstanding Voltage (DWV) and Insulation Resistance (IR) test requirements in this chapter as a precondition for their acceptance and installation in mission hardware. See paragraph 18.2.2 for exceptions applicable to coaxial cable.

18.2.2 Acceptance testing procedures shall be made available to the procuring Agency for review and approval prior to use.

18.2.3 Coaxial cable assemblies shall be given continuity, isolation, dielectric withstanding voltage (DWV), insertion loss, Voltage Standing Wave Ratio (VSWR), and time domain reflectometry (TDR) testing in accordance with and as specified in the engineering documentation.

18.2.4 Post-installation testing, consisting of continuity, DWV and IR unless otherwise specified, shall be performed after installing the cables or harness in place, but before mating connectors to assure that individual wire conditions have not been degraded by installation operations.

18.2.5 Records of all acceptance testing shall be complete and traceable to the cable or harness assembly being tested.

18.2.6 At a minimum, the electrical acceptance tests on potted-type connectors shall be performed immediately before the potting operation and after final assembly.

18.3 Test Methods

18.3.1 Hand test probes shall not be used directly in the cable or harness connectors.

18.3.2 When performing acceptance or post-installation testing the order of the tests shall be continuity, DWV and IR to mitigate the risk of overstress due to continuity defects and to detect latent defects that may have been excited to near-failure by the DWV test.

18.3.3 Continuity. Interconnecting cable and harness assemblies shall be tested for point-to-point electrical continuity.

18.3.4 Dielectric Withstanding Voltage (DWV). The following procedures and parameters apply:

a. The interconnecting cable or harness assembly shall withstand the application of a 1050 ± 50 Root Mean Square (RMS) voltage, a 60 Hz 1500 ± 75 DC voltage, or the DWV or high potential (Hi-Pot) voltage defined by the connector, cable or wire datasheet, whichever is the least, applied as follows.

b. The test potential shall be applied for at least 5 seconds at a rate of no less than 500V per second until the desired test potential is reached.

c. For the dc test, the time of application of the test potential may be reduced to the time required for steady state current to be established. There shall be no evidence of electrical breakdown or arc-over.

d. The test potential shall be applied between:

(1) Each conductor and all other conductors in the cable or harness assembly.

(2) Each conductor and each connector body.

(3) Each conductor and shield.

(4) Between shields.

(5) Between the shield and the connector body, except when the two are connected to each other.

e. Leakage current shall not exceed 1 milliampere when applied voltage is maintained for not more than 1 minute.

f. Following the testing, the connectors shall be visually inspected for degradation due to the test.

Note: Cable or harness assemblies with a large capacitance, (e.g., long runs generally over six feet, a long cable, or a harness incorporating shielding) should be tested using the dc potential option to avoid erroneous indications of failure.

18.3.5 Insulation Resistance (IR). The insulation resistance shall be measured using a voltage of 500 + 50/-0Vdc until a stabilized reading is attained not to exceed 1 minute, or as specified in the test procedure and in accordance with the following:

a. IR shall be measured:

(1) Between each conductor and all other conductors.

(2) Between each conductor and the shield.

(3) Between each conductor and each connector body.

(4) Between shields.

(5) Between shields and connector body except when the two are connected to each other.

b. The IR for any measurement made shall be greater than 100 megohms.

Note: WARNING: OPERATORS SHALL USE APPROPRIATE SAFETY PRECAUTIONS WHEN WORKING WITH HIGH VOLTAGES.

19. SPLICING

19.1 General

Splices may be configured as a simple splice, having one conductor joined to another conductor, or as a complex splice with one or more conductors joined to one or more other conductors. Splices may be completed using crimping or soldering processes.

19.2 General Information

19.2.1 Unless identified as part of the design in the manufacturing/engineering documentation, splices shall be considered repairs and shall be handled in accordance with paragraph 4.4.

19.2.2 Soldered splice terminations shall comply with the solder joint quality requirements of IPC J-STD-001FS in the Solder Connection Defects paragraph.

19.2.3 When the design of the splice piece parts allow it, the solder connections shall be inspected prior to and after shrink tube heat application.

19.2.4 Following soldering and prior to installing insulation sleeving, all areas that will be under insulation sleeving shall be cleaned with an approved solvent. Heat shrinkable soldering splices are exempt from this requirement.

19.2.5 Cleaning solution application shall be controlled to minimize propagation to other areas of the harness or cable being spliced.

19.2.6 The tubing or insulation used for splices shall completely encapsulate the splice body and extend over the wires' insulation a minimum of two times (2X) the diameter of the largest wire in the splice. When multiple layers of tubing or insulation are used, each additional layer shall overlap the underlying layer by no less than two (2) diameters of the largest wire in the splice at each end.

19.2.7 The types of splices in this section are considered standard. The requirements of NASA-STD-8739.6 for non-standard configurations apply for uses of other approaches for splicing.

19.3 Soldered Splices

Solder-style splices are primarily designed for the termination of a single conductor to a single conductor, but may be used for the termination of multiple conductors (i.e., a branch or fan-out

circuit), providing the splice design is appropriately configured/sized to accommodate all the conductors without modifications. Solder-style splices produce a smaller, more compact splice termination, with significant weight reductions over crimp-style splices.

19.4 Lap Splice

A lap splice is where the conductor ends are laid parallel to, and overlap each other, and are terminated with a solder joint (see Figures 19-1 and 19-2). This configuration can be used to join two wires or to electrically terminate a cable or harness RFI/EMI shield.

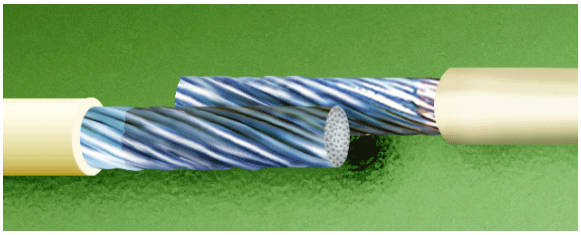

Figure 19-1. Pre-Tinned Conductors

Figure 19-2. Soldered Conductors

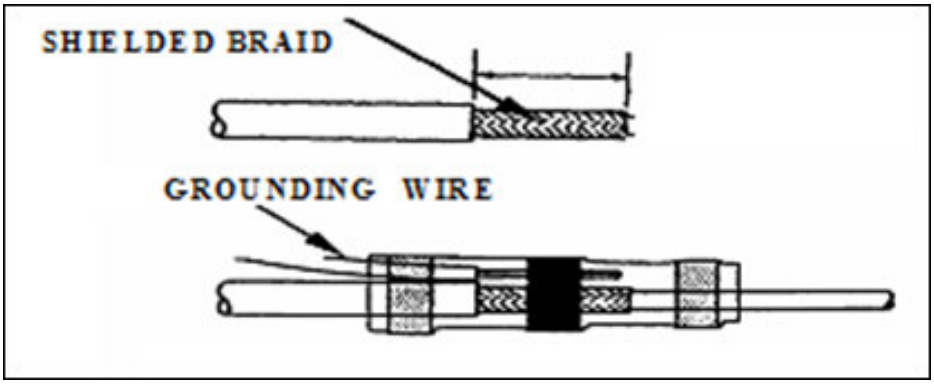

Figure 19-3. Individual Shield Termination with a Lap Splice and Solder Sleeve

19.4.1 The following requirements apply for lap splices:

a. For spliced wires, the conductors shall be pre-tinned.

b. For terminated shields the drain wire conductor shall be pretinned and the shield shall not be pretinned.

c. The conductors shall be parallel to, and in contact with each other at least three (3) wire diameters, but not more than six (6) wire diameters.

d. The conductors to be spliced shall not be twisted together.

e. Conductors shall not overlap the insulation of the other wire.

f. There shall be no protruding wire strands.

g. A solder fillet shall be formed on both sides of the conductors for the entire length of the area where they overlap.

h. After soldering, the conductors' contours shall be discernible (see Figures 19-3 and 19-4).

Figure 19-4. Sleeving over Soldered Connection

Figure 19-5. Double Sleeving over Soldered Connection

19.5 Lash Splice

A lash splice (see Figure 19-7) is a soldered splice identical to the lap splice (see Figure 19-2) except for the addition of a single strand wire winding (overlash) that binds the conductors together.

19.5.1 The following requirements apply for lash splices:

a. The conductors to be spliced shall be pre-tinned (see Figure 19-6), parallel to, and in contact with each other at least three (3) wire diameters, but not more than six (6) wire diameters.

b. The conductors to be spliced shall not be twisted together.

c. Conductors shall not overlap the insulation of the other wire.

d. There shall be no protruding wire strands.

Figure 19-6. Pre-Tinned Conductors

Figure 19-7. Lashing of Pre-Tinned Conductors

Figure 19-8. Soldered Connection

e. The wire used to lash the conductors together shall be a solid wire.

f. The wire used to lash the conductors together shall be wrapped a minimum of 6 turns and the wraps shall not extend past the end of either conductor (see Figure 19-7). An alternative configuration for the lash splice is the Lash End Type Splice (see Figures 19-8 and 19-9).

g. The wire lash shall be either an open spiral (no more than 2 lashing wire diameters between turns) or closed (each wrap is in contact with its adjacent wrap).

h. The wraps shall not overlap and the ends of the wrap shall be trimmed flush prior to soldering to prevent the ends from protruding through insulation.

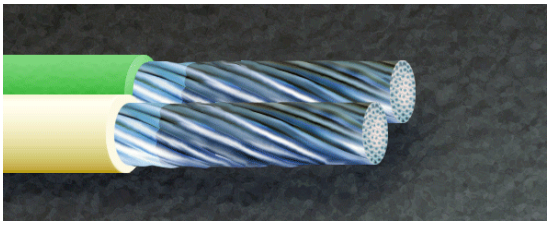

Figure 19-9. Pre-Lash End Type Splice

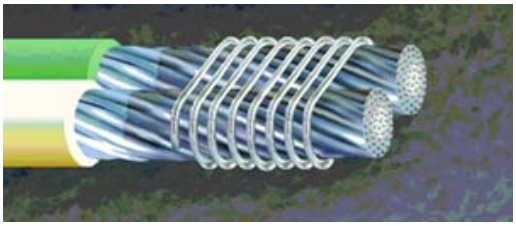

Figure 19-10. Lash End Type Splice

i. A solder fillet shall be formed on both sides of the conductors for the entire length of the area where they overlap and all turns of the wire used to lash the conductors together (see Figure 19-8).

j. After soldering, the conductors' contour need not be discernible, however the ends of the conductors and the contour of the wire used to lash the conductors together shall be discernable (see Figure 19-11 and Figure 19-12).

Figure 19-11. Soldered Lash Splice

Figure 19-12 Sleeved Lash Splice

19.6 Solder Sleeve

19.6.1 The following requirements apply for solder sleeve splices:

a. The solder ring shall be centered over the stripped conductors to be spliced and the sealing rings are over the wires' insulation prior to heating (see Figure 19-13).

b. The equipment (e.g., heat gun) used shall be capable of providing uniform heat of the type (e.g., IR, convection) and temperature range recommended by the manufacturer of the solder sleeve.

c. The heat application process (i.e. soldering process) shall ensure:

(1) That the solder ring is fully wetted to the conductors.

(2) That outline of the ring is no longer discernible (see Figure 19-14).

(3) That the insulation sleeving conforms to the profile of the wires being spliced.

(4) That the sealing rings are in intimate contact with the outer circumference of the insulation of the wires being spliced.

d. After heat application, the connection shall comply with the inspection requirements of 20.6.1.g.

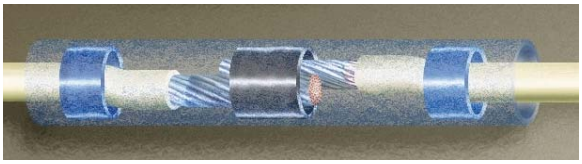

Figure 19-13. Solder Sleeve Prior to Flow

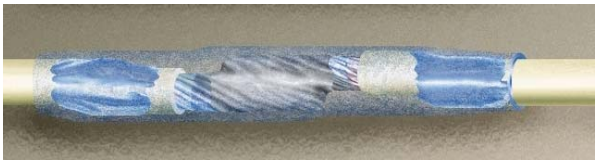

Figure 19-14. Fully Melted Solder Sleeve

19.7 Soldered Western Union/Lineman Splice

The soldered western union/lineman splice is a splice where each conductor is wrapped around the other conductor prior to soldering (see Figure 19-15).

Figure 19-15. Western Union/Lineman Splice

19.7.1 The following requirements apply for Western Union/Lineman splices:

a. The conductors shall be pre-tinned.

b. There shall be at least 3 turns around each conductor and the wraps shall be tight with no gaps between adjacent turns (see Figure 19-17).

c. The wraps shall not overlap and the ends of the wrap shall be trimmed flush prior to soldering to prevent protruding ends.

d. The conductors shall not overlap the insulation of the other wire (see Figure 19-17).

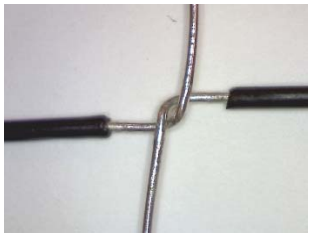

Figure 19-16. Initial Wrap for Western Union/Lineman Splice

Figure 19-17. Completed Wrap for Western Union/Lineman Splice

e. The solder quality shall comply with all the requirements of IPC J-STD-001FS for a solder termination.

f. Solder shall wet all elements of the connection.

g. The solder shall fillet between connection elements over the complete periphery of the connection (see Figure 19-18).

Figure 19-18. Soldered Western Union/Lineman Splice

19.8 Solder Ferrule

The solder ferrule splice (see Figure 19-20) is fabricated using a crimp ferrule.

19.8.1 The following requirements apply for solder ferrule splices:

a. Solder ferrule splices shall only be fabricated as an end splice.

b. The ferrule selected for use shall fit over the inserted tinned wires, but not over the wire insulation with a maximum insulation clearance equal to the diameter of the ferrule.

c. The minimum insulation clearance shall ensure that insulation does not interfere with the natural formation of the solder fillet.

d. The maximum protrusion from the end of the ferrule shall be one wire diameter of the largest wire in the wire bundle.

e. The minimum protrusion from the end of the ferrule is even with the end of the ferrule and visible after soldering.

f. The solder shall fill the ferrule and be visible at both ends.

g. The ferrule shall be cleaned prior to use.

h. The conductors shall be pre-tinned, parallel to, and in contact with each other as indicated in figure 19-19.

i. The conductors to be spliced shall not be twisted together.

j. The ferrule to be used shall be pre-tinned using a solder pot or solder iron.

k. The wires shall be secured (i.e. with a spot tie or similar means) to prevent movement during soldering.

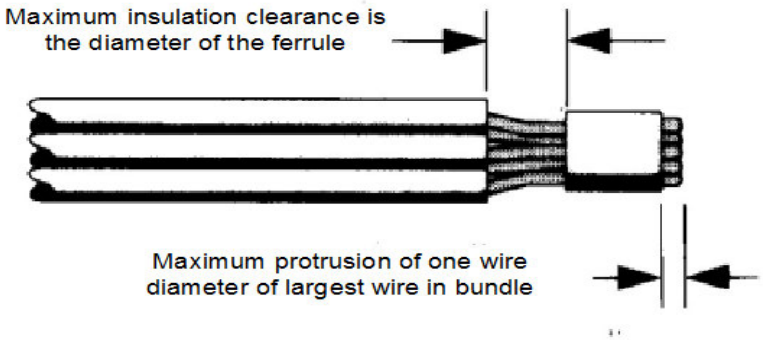

Figure 19-19. Solder Ferrule

l. When applying heat to solder the splice it shall be done away from the wire insulation.

m. Solder shall be applied at the insulation end of the ferrule.

n. The ferrule shall be filled completely with solder.

Figure 19-20. Solder Ferrule

19.9 Crimped Splices

Crimping wires into contacts or crimp ferrules is a method for splicing wires together without soldering. When crimping multiple wires into a contact or ferrule, the total circular-mil-area (CMA) of all the wires must be calculated into an Equivalent Wire Size (EWS) in order to select the properly sized contact or ferrule.

19.9.1 The following requirements apply for crimped splices:

a. The tooling verification process and the completed termination shall comply with all the requirements of this document for a crimp termination except as specified herein for jiffy junction devices.

b. The contact/wires size and crimp tool setting combination shall be developed and verified using the same requirements as for any machined contact (see 12.3.5).

c. The crimp ferrule or contact shall be sized equivalently with the calculated Equivalent Wire Size (EWS) or the next larger EWS if the calculated value does not exactly match a single wire size.

Figure 19-21. Stripped Wires Prior to Insertion

19.10 Modified Crimp Contact

19.10.1 The following requirements apply for crimped splices of the modified contact type:

a. The appropriate crimping tool and positioner shall be used based on 19.11.1.c below.

b. The wires being spliced shall not be twisted.

c. The wires being spliced shall be inserted into the barrel parallel to each other (see Figures 19-20 and 19-21).

d. All wires being spliced together shall be seated against the bottom of the barrel (see Figure 19-23.

e. The pin section of the contact shall be removed at its base and be free of burrs (see Figure 19-24).

f. Cuts extending into the crimp barrel body or distortions of the crimp barrel body shall be cause for rejection.

g. Shrink sleeving shall be installed over the termination and shall extend at least 2 crimp barrel diameters beyond the end of the contact and beyond the insulation of the wire that has the greatest insulation gap (see Figure 19-25).

Figure 19-22. Stripped Wire Bundle Prior to Insertion

Figure 19-23. Wires Crimped Within Contact

Figure 19-24. Contact Trimmed and Deburred

Figure 19-25. Contact Covered With Shrink Sleeving

19.11 Crimp Ferrule Splice

The crimp ferrule splicing method is used for splicing wires together without soldering. Splices using the crimp ferrule method may be of the end-type or parallel type. End type splices (see Figure 19-26) are used to terminate two or more conductors in a “pig-tail” configuration. Parallel splices (see Figure 19-27) are used to dress and terminate multiple conductors, of the same or different gauges, in a parallel configuration.

19.11.1 The following requirements apply for crimped ferrule splices:

a. The tooling verification process shall comply with all the requirements of this document for a crimp termination.

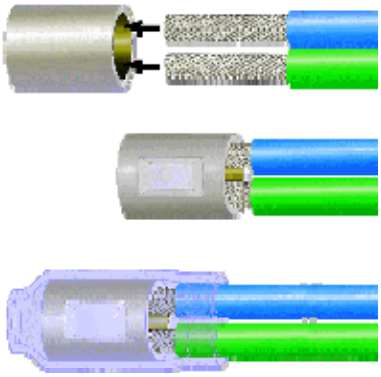

Figure 19-26. End Type Splice

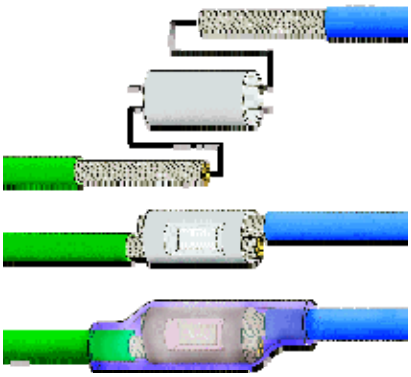

Figure 19-27. Parallel Type Splice

b. The size of the crimp barrel shall be based on the manufacturer's specifications.

c. For the end type splice the wires being spliced shall be inserted into the barrel parallel to each other and all wires shall be seated against the bottom of the barrel.

d. For the parallel type splice the wires shall be inserted into the ferrule parallel to each other.

e. The wire ends shall be at least flush with the ends of the ferrule and shall not extend more than two wire diameters beyond the end of the ferrule.

f. Proper insulation spacing shall be maintained to prevent insulation from being crimped.

g. Inspection criteria specified by the crimp ferrule manufacturer shall be applied.

h. The contact shall be deformed only by tool indenters.

i. Crimp tool indenters shall be symmetrical and centered on the crimp barrel.

j. There shall be no exposed base metal or other damage.

Note: This type of crimped connection will typically be installed with a crimp tool with 2 indenter blades instead of the normal 4 indenter blades.

19.12 Butt Splice

The butt splice (see Figure 19-28) is one of the simplest and most often used of the crimp splices, and obtains its name from the alignment of the conductors in the crimp barrel. The crimp is available in both an insulated and uninsulated version. The splice provides a very small diameter profile when installed in a harness.

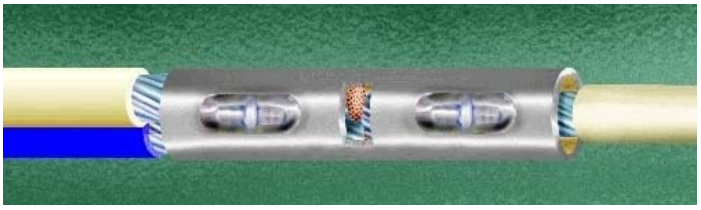

Figure 19-28. Butt Splice

19.12.1 The following requirements apply for butt splices:

a. The conductor(s) shall be stripped per 10.1 and trimmed to length to allow full insertion into the crimp barrel, such that the conductor ends are visible in the wire inspection hole.

b. For single conductor configurations the butt splice contact shall be sized and selected according to the conductor-crimp combinations listed in MIL-DTL-22520G [Table III], or as specified by the crimp contact manufacturer.

c. For multiple conductor configurations involving the crimping of multiple conductors in one or both ends of the contact (see Figure 19-29), crimp ferrule selected shall be based on the calculated equivalent wire size (EWS). EWS is the sum of the circular mill area (CMA) of the wires to be spliced, multiplied by 1.25.

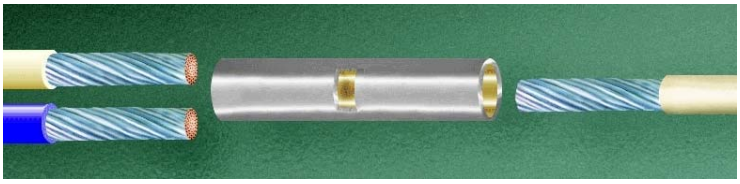

Figure 19-29. Butt Splice Prior to Wire Insertion

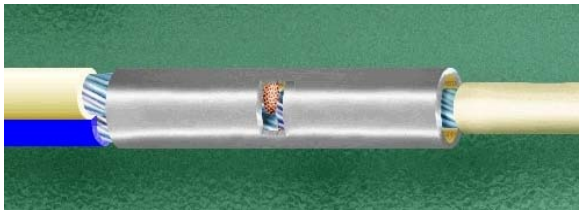

Figure 19-30. Butt Splice Prior to Crimp

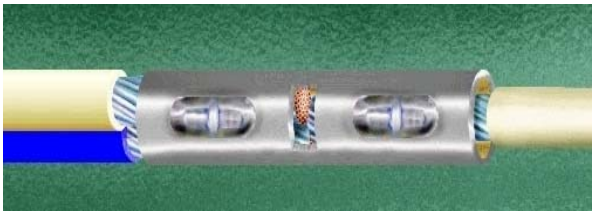

Figure 19-31. Properly Crimped Butt Splice

d. The conductor(s) shall be fully inserted in the crimp barrel, parallel to each other, and without modification to the conductor(s) or crimp barrel (see Figure 19-30).

e. Conductor insulation gap(s) should be approximately equal, and shall comply with the insulation gap requirements specified in 10.1.11.b for each conductor size.

f. The contact shall be crimped to the conductor per the contact manufacturer's recommendations or engineering documentation.

g. Indentions shall be symmetrical and centered along the longitudinal axis of the crimp barrel.

h. Single crimp indents shall be located opposite of the barrel weld (see Figure 19-31).

i. Pre-insulated contacts shall be assembled and crimped per the contact manufacturer's recommendations or engineering documentation.

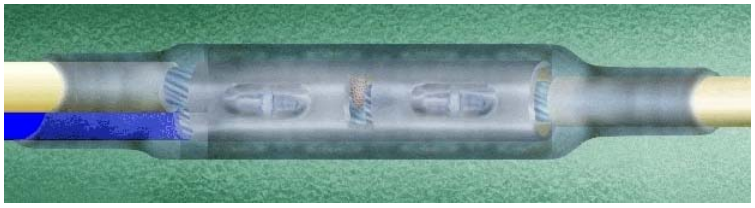

Figure 19-32. Butt Splice with Shrink Sleeving

j. Crimp indentions shall be symmetrical and properly located within each crimp zone (as specified in the crimp manufacturer's data sheet or engineering documentation).

k. Insulated crimps with integral strain relief shall exhibit proper crimping of the strain relief feature.

19.13 Wire In-Line Junction Devices (Jiffy Junctions)

Wire In-Line Junction Device splices apply crimp contacts to conductors that are installed in a common splice tube (Jiffy Junction) (see Figures 19-33 and 19-34). The following requirements apply for in-line Jiffy Junction type splices:

a. The tooling verification process and the completed termination shall comply with all the requirements of this document for a crimp termination.

Figure 19-33. Crimped Contact Outside Junction Device

Figure 19-34. Crimped Contacts Inserted Into Junction Device

b. The quality inspection criteria define by the manufacturer's instructions applies.

c. The crimp tensile strength (i.e., pull test) values shall be in accordance with Table (19-1).

d. The contacts shall be deformed only by the tool indenters.

e. Indents shall be symmetrical and centered on the crimp barrel.

f. There shall be no exposed base metal or other damage.

g. On terminal junctions and certain insertable crimp-contact connectors, contacts are not exposed for push testing. Contacts shall be properly installed and retained (i.e., locked-in/seated) within the cavities and withstand the axial (i.e., contact retention) loads specified in Table (19-2), without dislodging or damaging the contact, wire sealing grommet, cavity, or the contact retention mechanism. Note: pull test is performed between the bodies of the junction, and not the wires.

Table 19-1. Crimp Tensile Strength Values for Wire-in-Line Junction (i.e., Jiffy Junction) Devices

Contact Barrel Size	Wire Size (AWG)	Base Conductor Material w/Nickel Plating	Tensile Strength (Newtons) Pounds, Minimum	
			Pin Contacts	Socket Contacts
22	26	Copper	(13.5) 3	(13.5) 3
	26	Copper Alloy	(13.5) 3	-
	24	Copper	(22.3) 5	-
	24	Copper Alloy	(22.3) 5	-
	22	Copper	(35.6) 8	(35.6) 8
	22	Copper Alloy	(35.6) 8	-
20	24	Copper	(35.6) 8	(26.7) 6
	24	Copper Alloy	(64.0) 14.4	-
	22	Copper	(56.9) 12.8	-
	22	Copper Alloy	(98.8) 22.2	-
	20	Copper	(91.6) 20.6	(44.5) 10
16	20	Copper	(91.6) 20.6	(44.5) 10
	16	Copper	(183.3) 41.2	(129.0) 29
12	14	Copper	(289.6) 65.1	(151.3) 34
	12	Copper	(459.0) 103.2	(289.1) 65
8	8	Copper	(1281.1) 288	-

Table 19-2. Splice Body Retention Values for Wire-in-Line Junction (i.e., Jiffy Junction) Devices

Contact Size	Axial Load (Newton) pounds	
	Pin Contacts	Socket Contacts
22	(13.4 to 22.3) 3.0 to 5.0	(13.4 to 22.3) 3.0 to 5.0
20	(13.4 to 22.3) 3.0 to 5.0	(13.4 to 22.3) 3.0 to 5.0
16	(17.8 to 31.2) 4.0 to 7.0	(17.8 to 31.2) 4.0 to 7.0
12	(17.8 to 31.2) 4.0 to 7.0	(17.8 to 31.2) 4.0 to 7.0

20. QUALITY ASSURANCE PROVISIONS

20.1 General

20.1.1 Workmanship. Workmanship shall be of a level of quality adequate to assure that the processed products meet the performance requirements of the engineering documentation and criteria delineated herein.

20.1.2 Inspection for acceptability of assemblies manufactured in accordance with the requirements herein shall be performed.

20.1.3 Conductors shall not be physically disturbed to aid inspection.

20.1.4 Inspections shall be made at appropriate points during assembly, at the completion of assembly, and after installation to establish that the appropriate requirements have been met.

20.1.5 Inspection may include visual inspection, mechanical measurements, electrical testing, and other methods as deemed necessary.

20.1.6 Inspection and testing points shall be specified on the applicable planning documents.

20.1.7 Visual inspection of all connections shall be performed in-process and after final assembly, as appropriate.

20.1.8 Quality Assurance has the responsibility to verify compliance with all requirements of this document. Specific functions are as follows:

20.1.9 Verify that all tests, inspections, and measurements, including contact retention tests, specified by this document have been performed.

20.1.10 Verify that all personnel who assemble or inspect hardware in accordance with this document have been trained and certified to the applicable requirements herein.

20.1.11 In-process surveillance of all assembly operations to verify that all processes and procedures implementing the requirements of this document are current, approved, adequate, and being properly implemented.

20.1.12 Verify that contacts, connectors, and conductors have been inspected prior to being assembled.

20.1.13 Verify and monitor that the facility cleanliness, environmental conditions, and lighting requirements of Chapter 6 of this Standard are being met.

20.1.14 Verify and monitor that fabrication of assemblies is accomplished in a contamination controlled area conforming to the requirements approved by the procuring activity.

20.1.15 Verify and monitor that procedures defining cleaning, drying, handling, and packaging are approved and their requirements are followed.

20.1.16 Verify that all torque requirements are met.

20.1.17 Inspect that crimp terminations are in accordance with Chapter 12 of this Standard.

20.1.18 Inspect that soldering processes and soldered interconnects are in accordance with IPC J-STD-001FS.

20.1.19 Inspect that solder sleeve terminations were fabricated and installed as directed by engineering documentation.

20.1.20 Verify installation processes and acceptance/rejection criteria for solder sleeve termination devices were defined and approved.

20.1.21 Verify that other processes such as potting and molding, necessary to fabricate a cable or harness, are defined by the engineering documentation and approved including accept/reject criteria for non-standard configurations.

20.2 Documentation Verification

20.2.1 Quality assurance representatives shall verify that all required documentation is current and approved.

20.2.2 The required documentation shall include the following records:

a. Results of the visual examination.

b. Evidence of operator and inspector certification.

c. Production and inspection tool calibration when applicable.

d. Crimp testing results.

e. Torque requirements.

f. Contact retention test records.

g. Connector mate and demate log and bent pin log when applicable.

h. Results of all acceptance testing.

20.2.3 The required documentation shall include the following procedures:

a. Cabling and harnessing program.

b. Training and certification program.

c. Tooling and equipment operation procedures.

d. Calibration system.

e. Electrostatic Discharge Control program when applicable.

f. In-process storage and handling procedures.

g. Compounds and special design requirements used for staking of lacing knots.

h. Acceptance testing results for cable and harness assemblies.

20.3 Documentation Authorization.

20.3.1 The Quality assurance representative shall verify that the following documentation has been approved in accordance with 1.4 by the procuring NASA Center prior to implementation:

a. Special engineering requirements.

b. Nonstandard processes, materials, or parts.

c. Departures from this Standard.

d. Repair records.

e. Engineering documentation for special tools.

f. Approved solvents.

g. Acceptance test procedures.

20.4 Verification of Tools, Equipment, and Materials

20.4.1 Tools and Equipment. Tools and equipment shall be verified for conformance to the applicable requirements found in paragraphs 6.3, 6.6, and 12.3.

20.4.2 The Quality assurance personnel shall verify that special tooling is identified on assembly procedures.

20.4.3 The Quality Representative shall verify that all materials conform to the requirements of paragraphs 6.8 and 6.9 and that material controls shall are implemented to ensure that only conforming materials are used.

20.5 Inspection Criteria

20.5.1 Acceptance Criteria. Acceptance criteria are described in Chapters 1 through 18, Appendix A and the following:

a. Stripped Conductor:

(1) The insulation shall be uniform and shall exhibit no damage except slight discoloration when thermal strippers have been used.

(2) The conductor shall be clean and free from damage.

(3) Strands shall be twisted together in the original lay, or as nearly as possible to the original lay.

(4) Shield strands shall be clean. The number of nicked shield strands shall not exceed 10 percent of the total number of strands.

(5) Flat conductors shall be clean and free of damage.

b. Shield Terminations:

(1) Shield terminations shall be free of projecting strands.

(2) The wire insulation and shrink sleeving shall be free of punctures, cuts, and nicks.

(3) Metal crimp rings/ferrules are tightly and symmetrically crimped.

(4) The solder inside the solder sleeve shall show evidence of proper flow and fillet to the ground wire and shield braid.

(5) The solder sleeve may exhibit discoloration.

(6) The insulation sleeving shall be uniformly shrunk and provide proper covering of the termination.

(7) Solder sleeves are as specified in the engineering documentation.

(8) The solder fillets along the interfaces shall have a smooth, concave appearance.

c. Crimped Connections:

(1) Contact deformed only by tool indentations.

(2) Crimp indents properly located in the correct area of the contact.

(3) Wire strands visible in inspection hole of barrel.

(4) Metal ferrules tightly and symmetrically crimped.

(5) The clearance between the wire insulation termination and the crimp contact barrel is between .25mm (.01 in) to .75mm (.03 in) for wire sizes AWG 20 and smaller, and .25mm (.01 in) to 1.25mm (.05 in) for wire sizes AWG 18 and larger.

d. Cable and Harness Ties:

(1) Properly tied clove hitch and square or other non-slip knot.

(2) Correct and uniform spacing of ties for bundle size.

(3) Correct material as specified on the engineering documentation.

(4) Lacing terminated with a closing stitch and ends trimmed.

(5) No damage to or contaminants on the tie or adjacent wiring.

(6) Strap or tie properly secures wire bundle.

e. Cable and Harness Assemblies:

(1) Connectors are not damaged.

(2) Pin/sockets meet retention force requirements and are not damaged.

(3) Even distribution of tension throughout cable and harness.

(4) Length of wire twist is between 8 and 16 times the outer diameter of the harness.

(5) Cable and harness ties are properly spaced.

(6) Clamps are properly placed.

(7) Cable and harness are not distorted by ties or clamps.

(8) Minimum crossover.

(9) Proper bend radius of breakouts.

(10) Proper identification.

(11) All exposed metal is covered as defined on the applicable drawing.

(12) Heat shrinkable sleeving or nonconductive tape extends at least 5.1 mm (0.2 inch) beyond exposed metal.

(13) Sleeving is uniformly shrunk.

(14) Sleeving is free of cracks, punctures, and charred or burned areas.

(15) Location of shield terminations on wire as per engineering documentation.

(16) Braid is terminated properly.

(17) Cable or harness dimensions and configurations are in accordance with engineering documentation.

(18) Cable or harness is clean.

(19) Unused wires properly terminated.

(20) Routing does not expose cables and harnesses to abrasion, cold flow, or cut-through.

(21) Spiral sleeving with plastic straps are installed correctly.

(22) Protective separator applied over wire bundle beneath metal braid shielding, if required.

(23) Connector backshells and strain relief clamps are tightened as specified by engineering documentation.

(24) High strength copper alloy is used for AWG 24 and smaller conductors.

(25) Proper handling and protection.

f. Coaxial Cables:

(1) Proper strip length and assembly of center conductor into contact.

(2) Proper securing of outer conductor.

(3) Center contact location meets requirements for proper mating.

(4) Mating surfaces and coupling means are undamaged.

(5) Connector backshells and strain relief clamps are tightened as specified by the engineering documentation.

g. Solder Sleeves:

(1) The solder shall be visible through the insulation sleeving.

(2) The solder fillets along the interfaces shall have a smooth, concave appearance.

(3) Solder sleeves shall not be damaged. Slight discoloration resulting from the heating process is permissible.

(4) Solder sleeves shall cover all exposed metal in the spliced area.

(5) There shall be no protruding wire strands from under or through solder sleeves.

20.5.2 Rejection Criteria. The following are unsatisfactory conditions and shall be cause for rejection:

a. Stripped Conductor:

(1) Damaged, crushed, cut, or charred insulation.

(2) Nicked, gouged, damaged, or severed conductors.

(3) Frayed conductor strands.

(4) Severed shield braid strands.

b. Shield Terminations:

(1) Loose or projecting strands.

(2) Nicked shield strands exceeding 10% of the total number of strands.

(3) Wire insulation with cuts, punctures, or crushing.

(4) Metal ferrules crimped with improper alignment.

(5) Cracked, charred, or split insulation sleeving.

(6) Cracked or fractured solder.

(7) Insufficient solder or poor wetting.

(8) Improper sleeving coverage.

c. Crimped Connections:

(1) Metal ferrules crimped with improper alignment.

(2) Cracks in crimp barrel.

(3) Birdcaging of conductor.

(4) Wire strands not visible in inspection hole.

(5) Peeling or flaking of plating on contact.

(6) Damaged or deformed crimp contact.

(7) Crimp indents not located in the correct area on the contact.

(8) Tarnished, corroded, or contaminated crimp contact.

(9) Improper insulation clearance.

(10) Insulation whiskers that extend into the crimp barrel.

d. Cable and Harness Ties:

(1) Improperly laced ties.

(2) Incorrect material.

(3) Wire bundle damaged or deformed by tie.

(4) Loose ties.

(5) Ends not trimmed.

(6) Damaged or contaminated ties or wiring.

(7) Incorrect spacing of ties for bundle size.

(8) Improper handling or protection.

e. Cable and Harness Assemblies:

(1) Projecting strands on shield terminations.

(2) Wire insulation with cuts, punctures, or crushing.

(3) Metal ferrules crimped with improper alignment.

(4) Cracked, charred, or split insulation sleeving.

(5) Improper sleeving coverage.

(6) Birdcaging of conductor.

(7) Peeling or flaking of plating on connectors or pins/sockets.

(8) Damaged or deformed contacts.

(9) Damaged insulation in excess of slight discoloration.

(10) Tarnished, corroded, or contaminated contact.

f. Coaxial Cables:

(1) Improper strip length and incorrect assembly of center conductor into contact.

(2) Improper securing of outer conductor.

(3) Center contact location does not meet requirements for proper mating.

(4) Damaged mating surfaces and coupling means.

(5) Connector backshells and strain relief clamps are not tightened as specified by the engineering documentation.

g. Solder Sleeves:

(1) The solder connection is not visible through the insulation sleeving.

(2) Solder fillet(s) having an uneven and broken flow and/or a convex appearance.

(3) Solder fillet not visible at the interfaces of the stranded wire to shield braid, or stranded wire to stranded wire.

(4) Solder fillet is along only one side of the stranded wire to shield braid, or stranded wire to stranded wire interface.

(5) Solder sleeves do not cover all the metal exposed by the splice installation.

(6) Solder sleeves are split, burned, or damaged.

(7) Wire strands protrude from under or through solder sleeves.

APPENDIX A. WIRE VISUAL AIDS AND ILLUSTRATIONS

A.1 Wiring: Connectors, Cabling, and Harnessing – Wire Dress to Connect

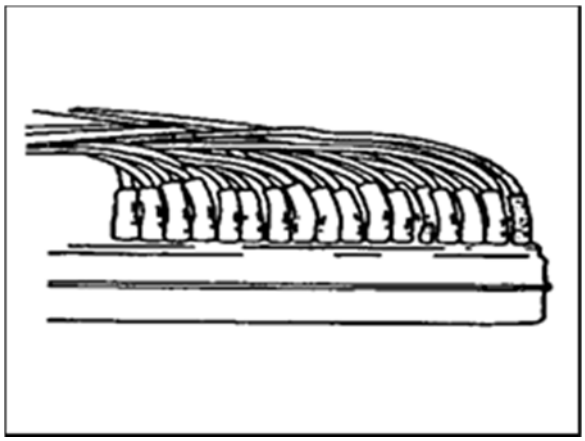

Figure A-1

PREFERRED
All wires dressed with even bends to terminate in solder cups.

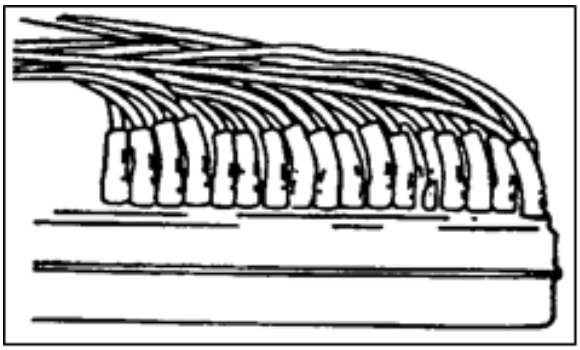

Figure A-2

NONCONFORMING
End wire on the right is taut with no stress relief.

A.2 Wiring: Connectors, Cabling, and Harnessing – Stress Relief Shrinkable Sleeving On Solder Cups

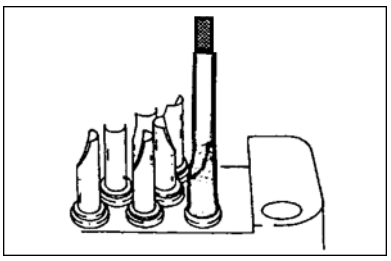

Figure A-3

PREFERRED

Sleeving on wire covers solder cup and provides support over wire insulation (see controlling specification)

Sleeving is fully shrunk over the insulation, wire, and solder cup.

Sleeving is sufficiently rigid to provide stress relief and prevent wire bending at the solder joint.

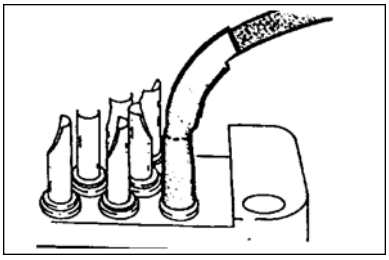

Figure A-4

NONCONFORMING

The sleeving is not fully shrunk and permits wire bending and flexing at the joint.

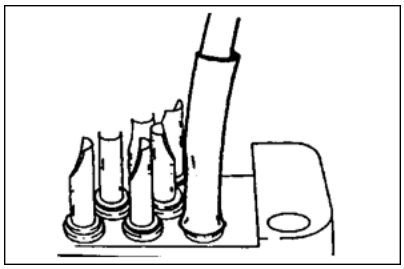

Figure A-5

NONCONFORMING

The sleeving is not fully shrunk.

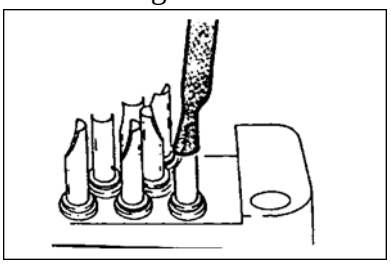

Figure A-6

NONCONFORMING

Sleeving does not grip at least half of the cup barrel below the opening.

A.3 Wiring: Connectors, Cabling, and Harnessing, Wire Preparation, Thermal Stripping

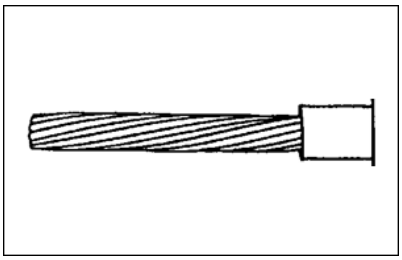

Figure A-7

PREFERRED

1. Insulation has been removed from the conductor with no visible damage to the wire strands.
2. Normal lay of wire, if disturbed, shall be retwisted to the original wire lay.

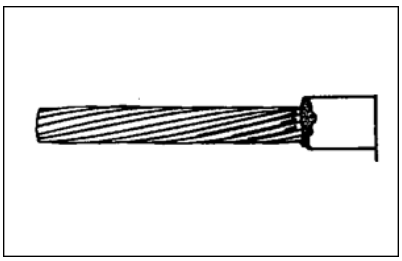

Figure A-8

ACCEPTABLE

Minor burnishing and indentation; base metal not exposed.

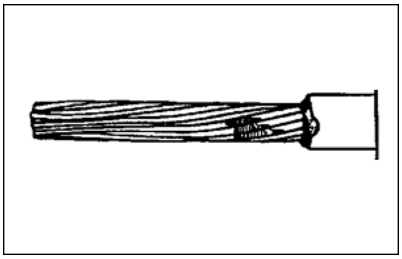

Figure A-9

NONCONFORMING

1. Wire strands are gouged and scraped exposing base metal.
2. Original lay of stranding has been straightened and distorted.

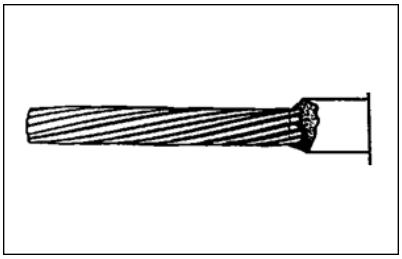

Figure A-10

NONCONFORMING

Wire strands show evidence of a nicked condition caused by stripper blades.

A.4 Wire Preparation: Mechanical Stripping

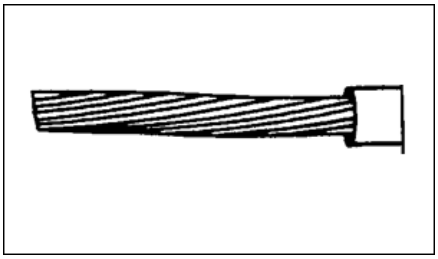

Figure A-11

ACCEPTABLE
Wire lay undisturbed; no visible damage to wire strands.

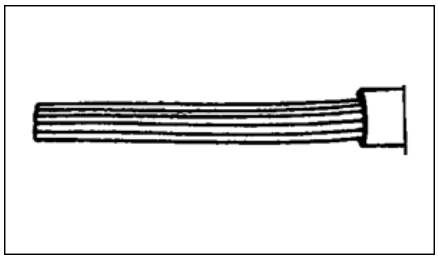

Figure A-12

UNACCEPTABLE
Wire strands combed straight. If retwisted to original lay, may be acceptable.

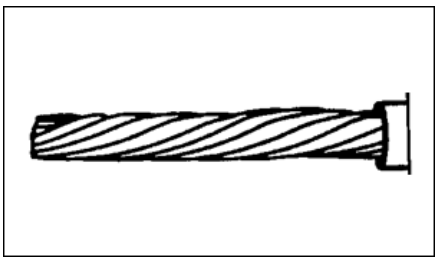

Figure A-13

UNACCEPTABLE
Excessive retwist.

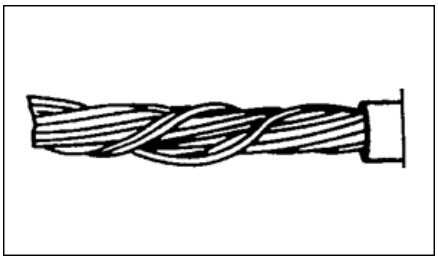

Figure A-14

UNACCEPTABLE
Wire strands retwisted in excess of normal lay and overlapped.

A.5 Wiring: Connectors, Cabling, and Harnessing, Wire Preparation, Thermal Stripping

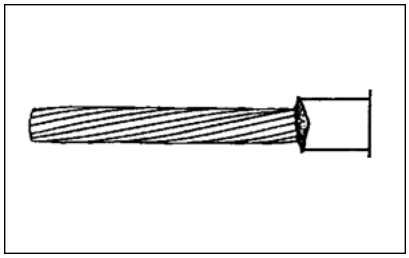

Figure A-15

PREFERRED

Insulation stripped by thermal stripping shall have minimum edge flash with no damage to the wire strands.

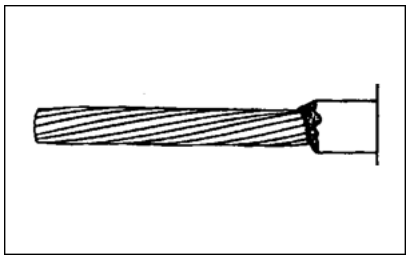

Figure A-16

ACCEPTABLE

Mechanical or thermal stripped insulation irregularity is acceptable if it does not exceed 1/4 of the outside diameter of the wire with insulation.

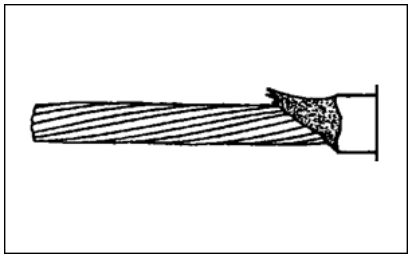

Figure A-17

ACCEPTABLE MINIMUM

Edge flash, due to improper stripping, should not exceed 1/4 of the outside diameter of the wire with insulation.

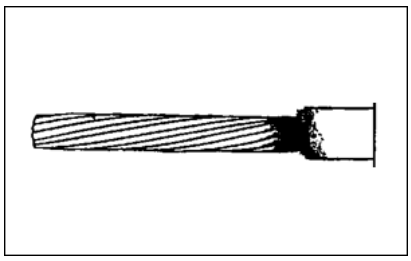

Figure A-18

NONCONFORMING

Burned or charred insulation, as shown, is the result of improper application of heat.

A.6 Wiring: Connectors, Cabling, and Harnessing, Wire Preparation, Tinning Stranded Conductors

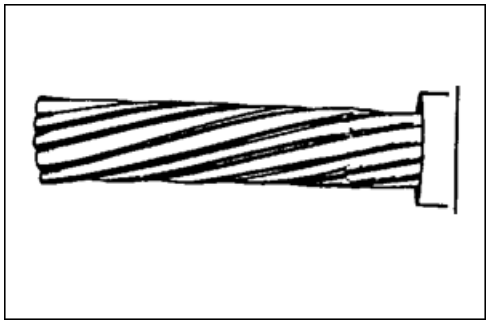

Figure A-19

PREFERRED

1. Complete wetting of the tinned area has resulted in a bright, thin, and even tinning of the strands
2. Tinning has reached insulation, but wicking is minimal.

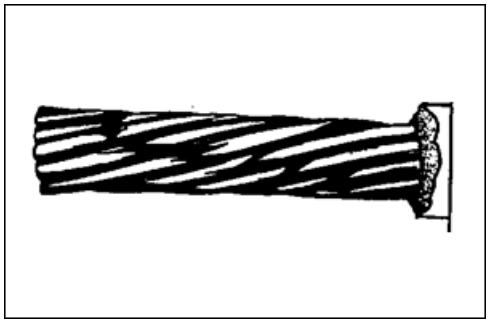

Figure A-20

ACCEPTABLE

Traces of solder wicking under insulation, but the contour of the stranding is easily discernible.

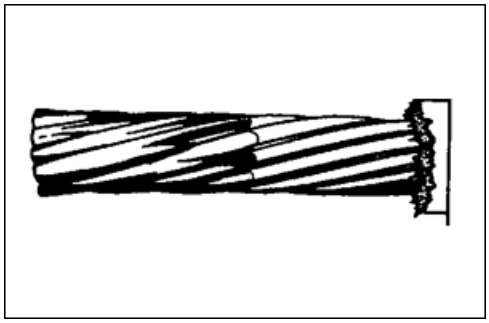

Figure A-21

ACCEPTABLE

Length of tinning is determined by type of termination; however, it should be sufficient to prevent separation of strands when wire is wrapped around a terminal.

A.7 Wiring: Connectors, Cabling, and Harnessing – Installation of Straps

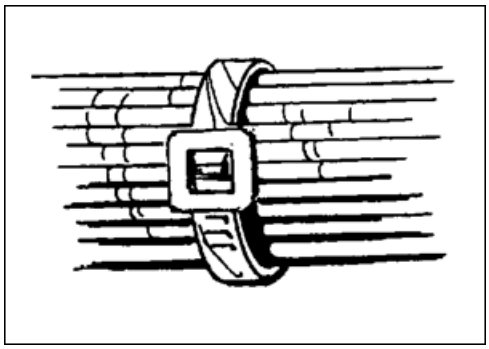

Figure A-22

ACCEPTABLE

1. Conductors secured with a plastic strap.
2. When tightened correctly, strap will not move laterally along the bundle under normal handling but can be rotated in place.

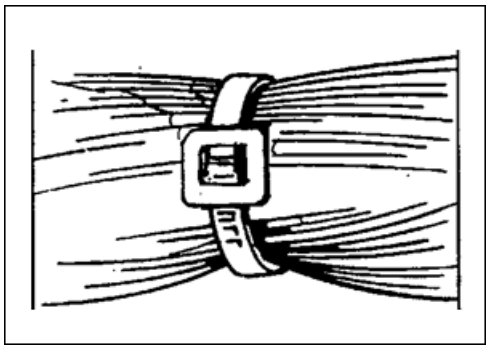

Figure A-23

UNACCEPTABLE

Strap is too tight and is deforming the insulation on the wire.

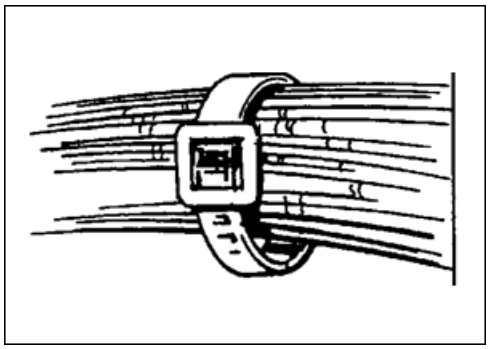

Figure A-24

UNACCEPTABLE

Strap is too loose and will slip easily along the bundle with normal handling.

A.8 Crimps: Insulation Clearance

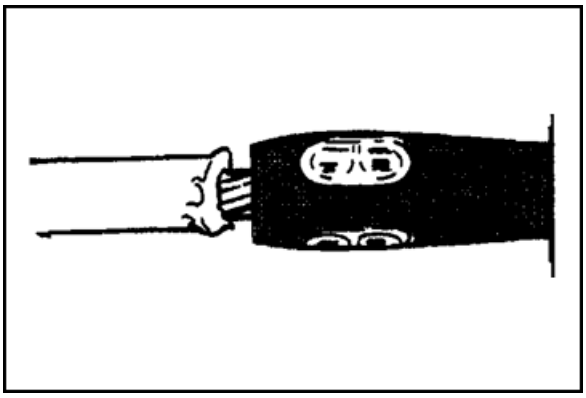

Figure A-25

MINIMUM CONDUCTOR EXPOSURE

Insulation terminates 0.010 in. minimum from contact crimp barrel.

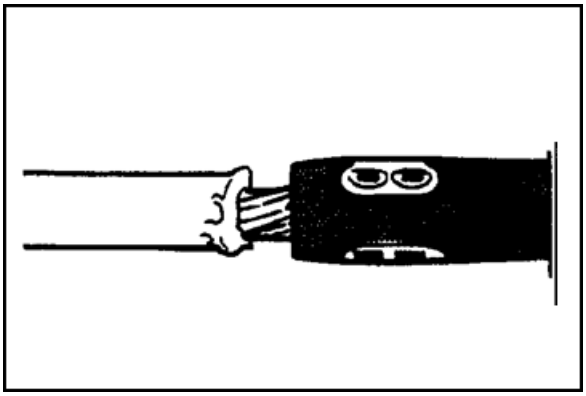

Figure A-26

MAXIMUM CONDUCTOR EXPOSURE

Amount of exposed bare wire between the insulation and the contact crimp barrel does not exceed 0.03 inch maximum for No. 20 AWG wire and smaller, and 0.05 inch maximum for No. 18 AWG wire and larger.

A.9 Crimps: Acceptable and Unacceptable

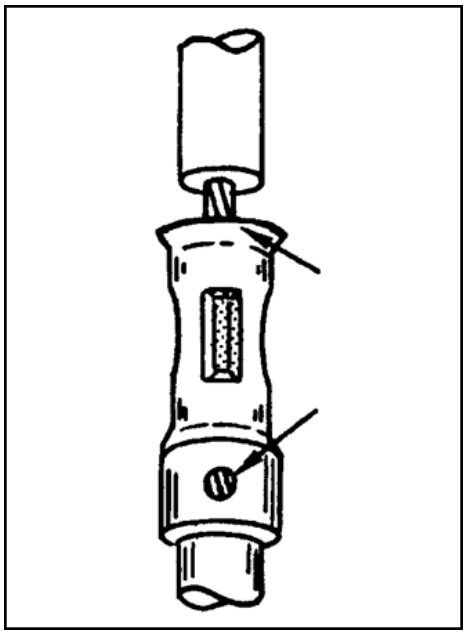

Figure A-27

ACCEPTABLE

Care should be taken when seating contacts in the crimping tool. The tool indentors should crimp the contact midway between the shoulder of the insulation support and the inspection hole. The wire is visible in the inspection hole.

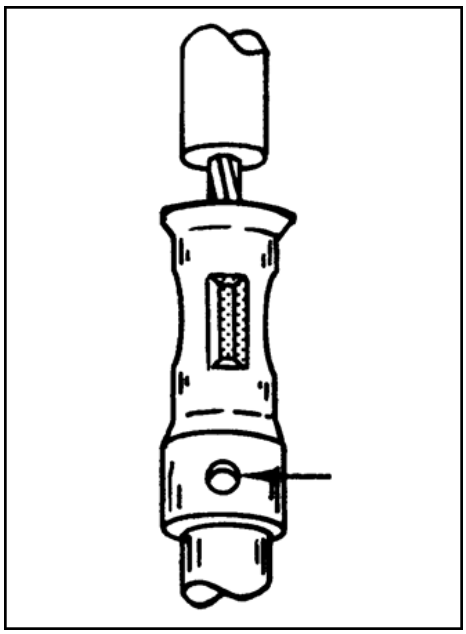

Figure A-28

UNACCEPTABLE

If the wire is not stripped back far enough or incorrectly seated in the contact, the wire will not be visible in the inspection hole, as shown.

A.10 Crimps: Unacceptable

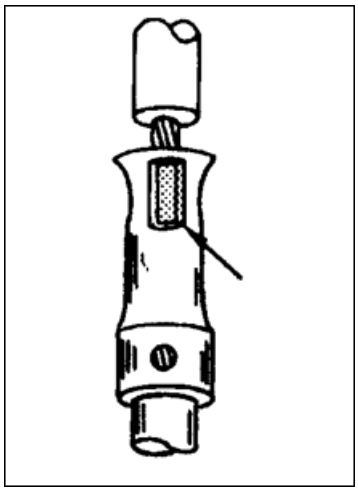

Figure A-29

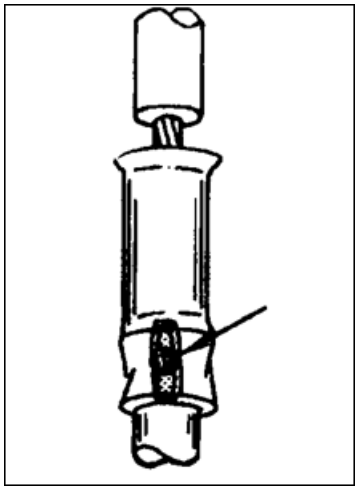

Figure A-30

Failure to properly seat contact in crimping die, or use of incorrect crimping tool will result in improperly crimped contacts. Crimping over the inspection hole or on the radius of the shoulder as shown in Figures A-29 and A-30 is unacceptable.

UNACCEPTABLE PIN

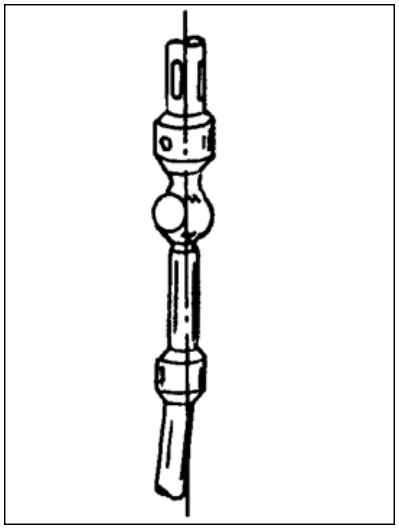

Figure A-31

APPENDIX B. CRITICAL PROBLEMS IN COAXIAL CABLE ASSEMBLY

B.1 Scope

This appendix provides information about problem areas and failures that result from poor connector design, faulty assembly instructions, or wrong choice of materials for certain types of coaxial cable assemblies.

B.1.1 Plastic Jacket Layer in the Compression System. Certain manufacturers' RF-connector designs or assembly instructions allow the jacket to be in the clamping system. For example, the metal clamp nut presses against the teflon cable jacket, which presses against the metal braid, which presses against the metal cable barrel of the connector. The problem encountered with this arrangement is that after torquing, the teflon jacket cold-flows, and the connection becomes loose. Intermittent circuits and system failure can result. Either this type of connector should not be used, or the plastic jacket should be trimmed back so that only metal-to-metal compression exists (see Figure B-1). If the connector design is such that satisfactory metal-to-metal compression cannot be achieved after torquing, the connector should not be used.

B.1.2 Inadequate Center Conductor to Center Contact Solder Joint. Certain manufacturers recommend that the center conductor be tinned, and that this tinned conductor be placed in the center contact. Then, the solder joint between the center conductor and center contact is made by reflowing the tinning in the center contact. Invariably, this makes an insufficient solder joint (see Figure B-2). A sufficient solder joint is made by placing a small length of rosin core solder in the contact wire well, e.g., 3.17mm (0.125 inch) length, 0.38 mm (0.015 inch) diameter. The center conductor is inserted into the wire well and the contact is heated to melt the solder and position the contact on the center conductor.

B.1.3 Breakage of Stress-Relief Sleeving. In assemblies where shrinkable sleeving is used to provide stress relief from a connector ferrule to the cable, there is often a major transition in diameter as shown in Figure B-3. If MIL-I-23053/8 sleeving is used for stress relief, it often cracks at the large diameter of the transition. The use of MIL-I-23053/8 sleeving for these applications should be avoided.

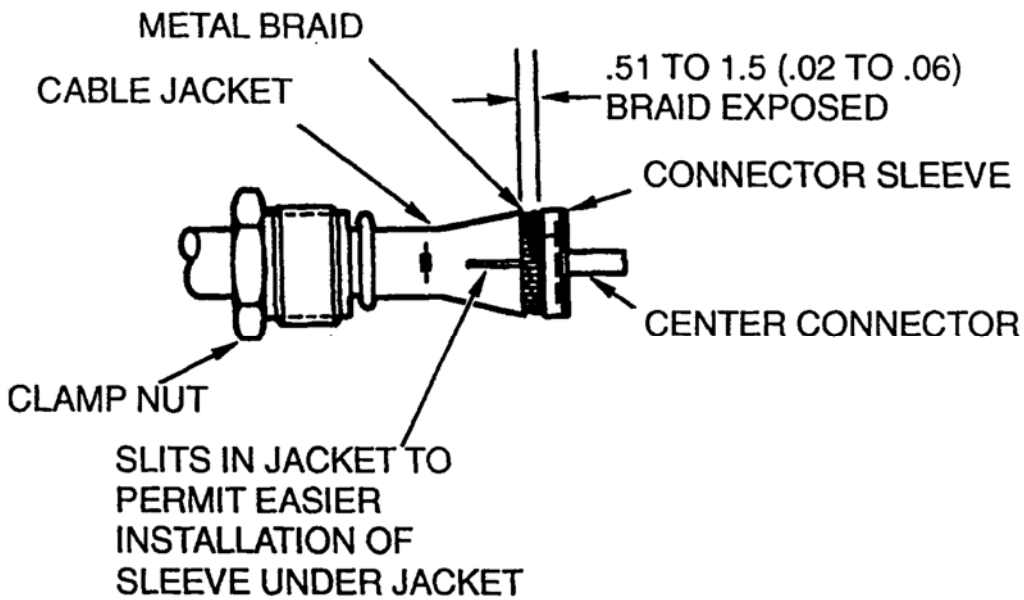

A. INADEQUATE EXPOSURE OF METAL BRAID. JACKET MAY BE IN CLAMPING SYSTEM

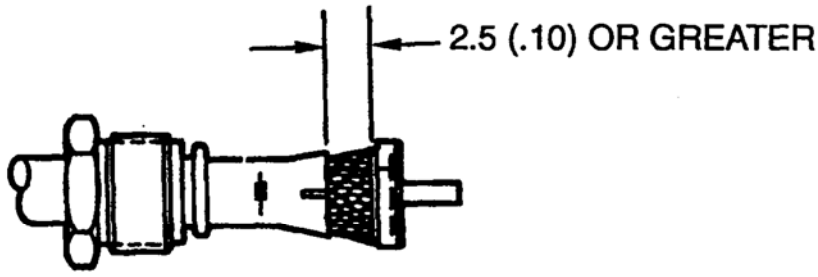

B. PROPER EXPOSURE OF METAL BRAID SO JACKET WILL NOT BE IN CLAMPING SYSTEM

DIMENSIONS IN MILLIMETERS (INCHES)

Figure B-1. Illustration of Proper Trimback of Jacket to Isolate it from the Clamping System

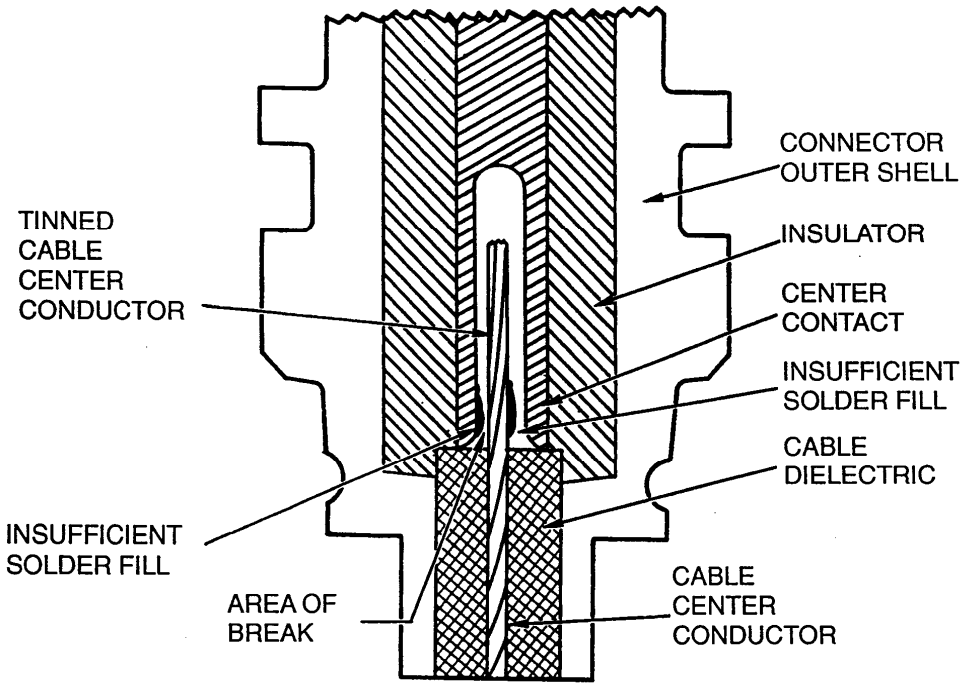

Figure B-2. Broken Solder Joint Caused by Insufficient Solder Fill

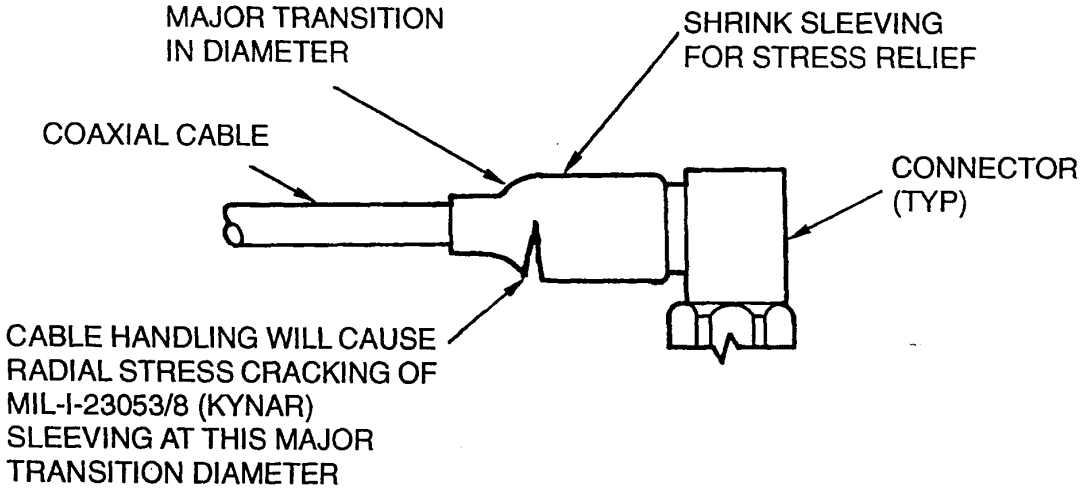

Figure B-3. Problem Point for Kynar Stress Relief Sleeving