Downloaded from http://www.everyspec.com

METRIC/SI (ENGLISH)

NASA TECHNICAL STANDARD

National Aeronautics and Space Administration

NASA-STD-3001,
VOLUME 2, REVISION B

Approved: 2019-09-09
Superseding NASA-STD-3001,
Volume 2, Revision A

NASA SPACEFLIGHT HUMAN-SYSTEM STANDARD

VOLUME 2: HUMAN FACTORS, HABITABILITY, AND ENVIRONMENTAL HEALTH

APPROVED FOR PUBLIC RELEASE – DISTRIBUTION IS UNLIMITED

Downloaded from http://www.everyspec.com

DOCUMENT HISTORY LOG

Status	Document Revision	Change Number	Approval Date	Description
Baseline			2011-01-10	Initial Release
Revision	A		2015-02-10	Revision of lunar dust standard, section 6.4.4.2
Revision	B		2019-09-09	Editorial changes throughout document with addition of the following sections/standards: 3.5/[V2 3006], 5.2.4/[V2 5008], 6.3.1.3/[V2 6105], 6.6.1.14/[V2 6106], 7.3.2.5/[V2 7085], 8.7.4/[V2 8059], 8.7.5/[V2 8060], 11.1.3.2/[V2 11028], 11.2.3.1/[V2 11029], 11.2.3.2/[V2 11030], 11.2.5.1/[V2 11031], 11.3/[V2 11032], 11.4/[V2 11033], 11.5/[V2 11034], 11.6/[V2 11035], 11.7/[V2 11036], 11.8/[V2 11037], 11.9/[V2 11038], 11.10/[V2 11039], and all of new Section 12, Ground Assembly Design and Emergency Egress Operations Assembly Design, replacing Section 13, Ground Maintenance and Assembly (Reserved). Deletion of the following sections/standards: 3.1/[V2 3001], 3.2/[V2 3002], 3.3/[V2 3003], 3.4/[V2 3004], 3.5/[V2 3005], 4.8.3/[V2 4014], 6.2.1.4/[V2 6005], 6.2.5.2/[V2 6018], 6.3.1.3/[V2 6028], 6.6.1.1/[V2 6071], 6.6.1.2/[V2 6072], 6.6.2.14/[V2 6086], 7.9.3/[V2 7072], 7.10.5/[V2 7078], 8.1.4/[V2 8004], 8.6.1.2/[V2 8044], 8.6.1.5/[V2 8047], 8.6.1.6/[V2 8048], 8.7.4/[V2 8054], 10.2.1.1/[V2 10029], 10.3.2.4/[V2 10041], 10.3.4.1.1/[V2 10051], 10.5.3.8/[V2 10092], 11.1.2.3/[V2 11004], 11.1.3.3/[V2 11008], 11.2.3.1/[V2 11026] and Section 12, Operations (Reserved). The following sections/standards were materially changed either in the text of this

Downloaded from http://www.everyspec.com

DOCUMENT HISTORY LOG (Continued)

Status	Document Revision	Change Number	Approval Date	Description
Revision	B		2019-09-09	Continued: NASA Technical Standard and/or in the rationale: 1.1, 1.2, 1.3, 1.4, 4.2.2/[V2 4006], 4.4/[V2 4008], 5.1.1/[V2 5001], 5.1.2/[V2 5002], 5.1.3/[V2 5003], 5.2.1/[V2 5005], 5.2.2/[V2 5006], 5.2.3/[V2 5007], 6.2.1.2/[V2 6003], 6.2.1.3/[V2 6004], 6.2.2.1/[V2 6006], 6.2.2.2/[V2 6007], 6.2.2.3/[V2 6008], 6.2.3.2/[V2 6011], 6.2.4.1/[V2 6012], 6.2.4.3/[V2 6014], 6.2.5.1/[V2 6017], 6.2.6.1/[V2 6020], 6.2.6.2/[V2 6021], 6.2.7.1/[V2 6022], 6.3.1.1/[V2 6026], 6.3.2.7/[V2 6035], 6.4.4.1/[V2 6052], 6.4.5.3/[V2 6056], 6.4.5.4/[V2 6057], 6.4.8/[V2 6063], 6.5.1/[V2 6064] (Figures 4 and 5), 6.5.2.2/[V2 6066], 6.5.2.3/[V2 6067], 10.6.1.9/[V2 10108], 11.1.2.1/[V2 11006], 11.1.2.2/[V2 11007], 11.1.3.3/[V2 11014], 11.1.6/[V2 11023], 11.2.1.1/[V2 11024], 11.2.2.1/[V2 11025], 11.2.4.1/[V2 11027].

Downloaded from http://www.everyspec.com

FOREWORD

This NASA Technical Standard is published by the National Aeronautics and Space Administration (NASA) to provide uniform engineering and technical requirements for processes, procedures, practices, and methods that have been endorsed as standard for NASA programs and projects, including requirements for selection, application, and design criteria of an item. This NASA Technical Standard provides uniform technical requirements for the design, selection, and application of hardware, software, processes, procedures, practices, and methods for human-rated systems.

This NASA Technical Standard is approved for use by NASA Headquarters and NASA Centers and Facilities, and applicable technical requirements may be cited in contract, program, and other Agency documents. It may also apply to the Jet Propulsion Laboratory (a Federally Funded Research and Development Center (FFRDC)), other contractors, recipients of grants and cooperative agreements, and parties to other agreements only to the extent specified or referenced in applicable contracts, grants, or agreements.

This NASA Technical Standard establishes Agency-wide requirements that minimize health and performance risks for flight crew in human spaceflight programs. This NASA Technical Standard applies to space vehicles, habitats, facilities, payloads, and related equipment with which the crew interfaces during spaceflight and lunar and planetary, e.g., Mars, habitation.

Requests for information should be submitted via "Feedback" at https://standards.nasa.gov. Requests for changes to this NASA Technical Standard should be submitted via MSFC Form 4657, Change Request for a NASA Engineering Standard.

Original signed by .	09/05/2019 .
J. D. Polk, DO, MS, MMM, CPE, FACOEP, FAsMA	Approval Date
NASA Chief Health and Medical Officer	
NASA Headquarters	

Downloaded from http://www.everyspec.com

Concurrences:

Original signed by . 09/06/2019 .
Terrence W. Wilcutt Concurrence Date
NASA Chief of Safety and Mission Assurance

Original signed by . 09/06/2019 .
Ralph R. Roe, Jr. Concurrence Date
NASA Chief Engineer

Downloaded from http://www.everyspec.com

TABLE OF CONTENTS

SECTION		PAGE
DOCUMENT HISTORY LOG		**2**
FOREWORD		**4**
TABLE OF CONTENTS		**6**
LIST OF APPENDICES		**9**
LIST OF FIGURES		**9**
LIST OF TABLES		**10**
1.	**SCOPE**	**11**
1.1	Purpose	11
1.2	Applicability	12
1.3	Tailoring	13
1.4	Authority	13
2.	**APPLICABLE DOCUMENTS**	**13**
2.1	General	13
2.2	Government Documents	14
2.3	Non-Government Documents	14
2.4	Order of Precedence	16
3.	**PROGRAM IMPLEMENTATION STANDARDS**	**16**
3.1	Applicability of this NASA Technical Standard	16
3.2	Systems Engineering Processes and Requirements	17
4.	**PHYSICAL CHARACTERISTICS AND CAPABILITIES**	**18**
4.1	Physical Data Sets	18
4.2	Body Lengths	19
4.3	Range of Motion Data	20
4.4	Reach Data	20
4.5	Body Surface Area Data	21
4.6	Body Volume Data	21
4.7	Body Mass Data	21
4.8	Strength	22
4.9	Aerobic Capacity	23
5.	**PERCEPTION AND COGNITION**	**23**
5.1	Perceptual and Cognitive Characteristics and Capabilities	23
5.2	Integrated Human Performance Capabilities	25

Downloaded from http://www.everyspec.com

TABLE OF CONTENTS (Continued)

SECTION		PAGE
6.	**NATURAL AND INDUCED ENVIRONMENTS**	**27**
6.1	Trend Analysis of Environmental Data	27
6.2	Internal Atmosphere	28
6.3	Water	37
6.4	Contamination	43
6.5	Acceleration	48
6.6	Acoustics	58
6.7	Vibration	67
6.8	Radiation	70
7.	**HABITABILITY FUNCTIONS**	**75**
7.1	Food and Nutrition	75
7.2	Personal Hygiene	82
7.3	Body Waste Management	83
7.4	Physiological Contermeasures	88
7.5	Medical	90
7.6	Stowage	92
7.7	Inventory Management System	94
7.8	Trash Management System	95
7.9	Sleep	96
7.10	Clothing	97
7.11	Housekeeping	98
7.12	Recreational Capabilities	99
8.	**ARCHITECTURE**	**100**
8.1	Volume	100
8.2	Configuration	101
8.3	Translation Paths	103
8.4	Hatches and Doorways	106
8.5	Restraints and Mobility Aids	109
8.6	Windows	113
8.7	Lighting	115
9.	**HARDWARE AND EQUIPMENT**	**118**
9.1	Standardization	118
9.2	Training Minimization	119
9.3	Hazard Minimization	119

Downloaded from http://www.everyspec.com

TABLE OF CONTENTS (Continued)

SECTION		PAGE
9.4	Durability	128
9.5	Assembly and Disassembly	129
9.6	Cable Management	130
9.7	Design for Maintainability	131
9.8	Protective and Emergency Equipment	135
10.	**CREW INTERFACES**	**138**
10.1	General	138
10.2	Layout of Displays and Controls	146
10.3	Displays	148
10.4	Controls	156
10.5	Communiation Systems	160
10.6	Automated and Robotic Systems	163
10.7	Information Management	168
11.	**SPACESUITS**	**172**
11.1	Suit Design and Operations	173
11.2	Suited Functions	179
11.3	LEA Suited Decompression Sickness Prevention Capability	181
11.4	Suited Atmospheric Control	182
11.5	Suited Atmospheric Data Recording	182
11.6	Suited Atmospheric Data Displaying	182
11.7	Suited Atmospheric Monitoring and Alerting	182
11.8	Suited Metabolic Rate Measurement	183
11.9	Suited Metabolic Rate Display	183
11.10	Nominal EVA Spacesuit Carbon Dioxide Levels	183
12.	**GROUND ASSEMBLY DESIGN AND EMERGENCY EGRESS OPERATIONS ASSEMBLY DESIGN**	**184**
12.1	Ground Assembly Design	184
12.2	Emergency Egress Operations	196

Downloaded from http://www.everyspec.com

TABLE OF CONTENTS (Continued)

LIST OF APPENDICES

APPENDIX		PAGE
A	Reference Documents	199
B	Acronyms, Abbreviations, and Symbols	206
C	Definitions	211
D	Requirements Compliance Matrix	224
E	Spacesuit System Applicability Matrix	279

LIST OF FIGURES

FIGURE		PAGE
1	Applicability, Tailoring, and Verification of Requirements for Programs	17
2	Environmental Comfort Zone	34
3	$+G_x$ Sustained Translational Acceleration Limits	50
4	$-G_x$ Sustained Translational Acceleration Limits	51
5	Ascent and Ascent Aborts $\pm G_z$ Sustained Translational Acceleration Limits	52
6	Return to Earth $\pm G_z$ Sustained Translational Acceleration Limits	53
7	$\pm G_y$ Sustained Translational Acceleration Limits	54
8	Rotational Velocity Limits	55
9	NC Curves	63
10	RF Electromagnetic Field Exposure Limits	74

Downloaded from http://www.everyspec.com

TABLE OF CONTENTS (Continued)

LIST OF TABLES

TABLE		PAGE
1	Inspired Oxygen Partial Pressure Exposure Ranges	30
2	Average Relative Humidity Exposure Limits for Post-Landing Operations	33
3	Potable Water Microbiological Limits	38
4	Acceptable Injury Risk Due to Dynamic Loads	57
5	Acoustic Limits for Launch, Entry, and Abort Phases	59
6	Acoustic Limits for On-Orbit Phase*	60
7	Octave Band SPL Limits for Continuous Noise, dB re 20 µPa	63
8	Intermittent Noise A-Weighted SPL and Corresponding Operational Duration Limits for any 24-Hour Period (measured at 0.6-m distance from the source)	64
9	Frequency-Weighted Vibration Limits by Exposure Time during Dynamic Phases of Flight	68
10	Maximum Permissible Exposure (MPE) to RF Electromagnetic Fields (modified from IEEE C95.1, lower tier)	73
11	EER Equations	76
12	Macronutrient Guidelines for Spaceflight	77
13	Micronutrient Guidelines for Spaceflight	78
14	Food Microorganism Levels	79
15	Medical Care Capabilities	90
16	Corners and Edges	121
17	Loose Equipment Corners and Edges	122
18	Leakage Currents – Equipment Designed for Human Contact	127
19	Maximum System Response Time(s)	144
20	Visual Display Parameters	151
21	Visual Display Character Parameters	152
22	Average Relative Humidity Exposure Limits for Suited Operations	181
23	EVA Spacesuit Inspired Partial Pressure of CO_2 (P_ICO_2) Limits†	184

Downloaded from http://www.everyspec.com

NASA SPACE FLIGHT HUMAN-SYSTEM STANDARD
VOLUME 2: HUMAN FACTORS, HABITABILITY, AND ENVIRONMENTAL HEALTH

1. SCOPE

The scope of this NASA Technical Standard is restricted to human spaceflight missions and includes activities affecting crew in all phases of the life cycle (design, development, test, operations, maintenance), both inside and outside the spacecraft in space and on lunar and planetary surfaces.

1.1 Purpose

The purpose of this NASA Technical Standard is to provide uniform technical requirements for the design, selection, and application of hardware, software, processes, procedures, practices, and methods for human-rated systems.

NASA-STD-3001, Space Flight Human-System Standard, is a two-volume set of National Aeronautics and Space Administration (NASA) Agency-level standards established by the Office of the Chief Health and Medical Officer, directed at minimizing health and performance risks for flight crews in human spaceflight programs. Volume 1 of NASA-STD-3001, Crew Health, sets standards for fitness for duty, spaceflight permissible exposure limits, permissible outcome limits, levels of medical care, medical diagnosis, intervention, treatment and care, and countermeasures. Volume 2 of NASA-STD-3001, Human Factors, Habitability, and Environmental Health, focuses on human physical and cognitive capabilities and limitations and defines standards for spacecraft (including orbiters, habitats, and suits), internal environments, ground processing, facilities, payloads, and related equipment, hardware, and software systems with which the crew interfaces during space operations.

Volume 1 of NASA-STD-3001 considers human physiologic parameters as a system, much as one views the engineering and design of a mechanical device. Doing so allows the human-system to be viewed as an integral part of the overall vehicle design process, as well as the mission reference design, treating the human-system as one system along with the many other systems that work in concert to allow the nominal operation of a vehicle and successful completion of a mission. In Volume 2, the focus turns to human-system integration where the context is about how the human crew interacts with other systems, including the habitat and the environment. The focus is on performance issues during a mission—whether the human and the system can function together (within the environment and habitat) and accomplish the tasks necessary for mission success.

Volume 2 of NASA-STD-3001 is applicable to all human space systems. Developers of a system are to write design requirements tailored for their system that will ensure the end product meets the requirements of Volume 2. A supplementary NASA document, NASA/SP-2010-3407,

Downloaded from http://www.everyspec.com

Human Integration Design Handbook (HIDH), can help with the preparation of the system-specific design requirements. The HIDH is a compendium of human spaceflight history and knowledge. It is organized in the same sequence as NASA-STD-3001, Volume 2, and provides useful background information and research findings. While the HIDH is not a NASA Technical Standard or a requirement, it should be a resource to understand the background associated with the standards to prepare the program- or project-specific requirements. The HIDH can be used not only in the preparation of requirements but also as a useful tool for designers. A complimentary reference document to the HIDH is NASA/TP-2014-218556, Human Integration Design Processes (HIDP). The HIDP describes the "how-to" processes, including methodologies and best practices that NASA has used during the development of crewed space systems and operations.

This NASA Technical Standard addresses the equipment and operational interfaces for both flight crew and ground personnel. System requirements fall into one of two categories:

- Requirements for the design of systems that directly interface with the flight crew (and only the flight crew) during a mission are in sections 3 through 11. These requirements include such topics as environmental support systems, architecture, controls and displays, and operations.

- Requirements for the design of systems that the ground personnel access, assemble, test, and process are addressed in section 12. Section 12 ensures that ground personnel capabilities are accommodated during ground processing and that the flight hardware will not be damaged by ground processing. Requirements for these systems consider the unique characteristics, capabilities, and needs of both the flight and ground support personnel.

This NASA Technical Standard contains fundamental, NASA-sanctioned information necessary for building and verifying human-rated spacecraft and is to be used for the development of lower level, program-specific requirements.

1.2 Applicability

This NASA Technical Standard is applicable to programs and projects that are required to obtain a human-rating certification. NPR 8705.2, Human-Rating Requirements for Space Systems, defines the requirements for space systems. The intent of this NASA Technical Standard is to be formally documented in program/project requirements and verification documentation.

This NASA Technical Standard is approved for use by NASA Headquarters and NASA Centers and Facilities, and applicable technical requirements may be cited in contract, program, and other Agency documents. It may also apply to the Jet Propulsion Laboratory (a Federally Funded Research and Development Center (FFRDC)), other contractors, recipients of grants and cooperative agreements, and parties to other agreements only to the extent specified or referenced in applicable contracts, grants, or agreements.

Downloaded from http://www.everyspec.com

This NASA Technical Standard applies to all internationally provided space systems only if required and documented in distinct separate agreements such as joint or multilateral agreements.

The NASA Technical Authorities—Health and Medical Technical Authority (HMTA), Chief Engineer, and Chief, Safety and Mission Assurance—assess NASA programs and projects for compliance with NASA-STD-3001. If the program or project does not meet the provisions of this NASA Technical Standard, then the associated risk to the health, safety, and performance of the crew is evaluated by the Technical Authorities.

Verifiable requirement statements are designated by the acronym "V2" (Volume 2), numbered, and indicated by the word "**shall**". Explanatory or guidance text is indicated in italics beginning in section 3. To facilitate requirements selection and verification by NASA programs and projects, a Requirements Compliance Matrix is provided in Appendix D.

1.3 Tailoring

As per NPR 7120.5, tailoring is the process used to adjust or seek relief from a prescribed requirement to accommodate the needs of a specific task or activity (e.g., program or project). The tailoring process results in the generation of deviations and waivers depending on the timing of the request. The tailoring of the requirements from this NASA Technical Standard for application to a specific program or project shall be formally documented as part of program or project requirements and formal approval obtained by the delegated Technical Authority in accordance with NPR 7120.5, NASA Space Flight Program and Project Management Requirements.

1.4 Authority

NASA policy for establishing standards to provide health, performance, and medical programs for crewmembers during all phases of spaceflight and to protect the health, performance, and safety of the crew is authorized by NPD 1000.3, The NASA Organization, and NPD 8900.5, NASA Health and Medical Policy for Human Space Exploration.

2. APPLICABLE DOCUMENTS

2.1 General

The documents listed in this section contain provisions that constitute requirements of this NASA Technical Standard as cited in the text.

2.1.1 The latest issuances of cited documents apply unless specific versions are designated.

2.1.2 Non-use of a specifically designated version is approved by the delegated Technical Authority.

Downloaded from http://www.everyspec.com

The applicable documents may be accessed at https://standards.nasa.gov or obtained directly from the Standards Developing Body or other document distributors. When not available from these sources, information for obtaining the document is provided.

2.2 Government Documents

NASA

NPR 7120.5, most current revision	NASA Space Flight Program and Project Management Requirements
NPR 8705.2	Human-Rating Requirements for Space Systems
NASA-STD-3001	NASA Space Flight Human-System Standard, Volume 1: Crew Health
NASA/TM-2013-217380, Revision 1	Application of the Brinkley Dynamic Response Criterion to Spacecraft Transient Dynamic Events
JPR-1800.5	Biosafety Review Board Operations and Requirements Document
JPR-1880.4	Requirements and Limitations for Exposure to Reduced Atmospheric Pressure
JSC-16888	Microbiology Operations Plan for Spaceflight
JSC-20584	Spacecraft Maximum Allowable Concentrations for Airborne Contaminants
JSC-26895	Guidelines for Assessing the Toxic Hazard of Spacecraft Chemicals and Test Materials
JSC-33124	41-Node Transient Metabolic Man Computer Program Documentation – A thermal regulatory model of the human body with environment suit applications

2.3 Non-Government Documents

Advisory Group for Aerospace Research and Development (AGARD)

AGARD-CP-472	Development of Acceleration Exposure Limits for Advanced Escape Systems (Brinkley, J.W.; Specker, L.J.; Armstrong, H.G.; Mosher, S.E. (February 1990)

Downloaded from http://www.everyspec.com

American Conference of Governmental Industrial Hygienists (ACGIH)

ACGIH Threshold Limit Values (TLVs®) and Biological Exposure Indices (BEIs®) Based on the Documentation of the Threshold Limit Values for Chemical Substances and Physical Agents & Biological Exposure Indices (https://www.chemsafetypro.com/Topics/USA/ACGIH_TLVs_Threshold_Limit_Values.html)

American National Standards Institute (ANSI)

ANSI C78-377 (see NEMA C78.377)	Electric Lamps - Specifications for the Chromaticity of Solid State Lighting Products
ANSI/ASA S2.70 (2006)	Guide for the Measurement and Evaluation of Human Exposure to Vibration Transmitted to the Hand
ANSI S3.2 (2009) (see LIA Z136.1)	Method for Measuring the Intelligibility of Speech over Communications Systems
ANSI Z136.1	American National Standard for Safe Use of Lasers

ASTM International

ASTM F2291-16 Standard Practice for Design of Amusement Rides and Devices

Institute of Electrical and Electronics Engineers (IEEE)

IEEE C95.1™ IEEE Standard for Safety Levels with Respect to Human Exposure to Radio Frequency Electromagnetic Fields, 3 kHz to 300 GHz

International Organization for Standardization (ISO)

ISO 2631-1:1997	Mechanical vibration and shock – Evaluation of human exposure to whole-body vibration – Part 1: General requirements, Annex B and Annex D
ISO 20283-5	Mechanical vibration—Measurement of vibration on ships; Part 5 - Guidelines for the measurement, evaluation and reporting of vibration with regard to habitability on passenger and merchant ships
ISO 7731:2003(E)	Ergonomics -- Danger signals for public and work areas -- Auditory danger signals

Reference documents are provided in Appendix A.

Downloaded from http://www.everyspec.com

2.4 Order of Precedence

2.4.1 The requirements and standard practices established in this NASA Technical Standard do not supersede or waive existing requirements and standard practices found in other Agency documentation.

2.4.2 Conflicts between this NASA Technical Standard and other requirements documents will be resolved by the delegated Technical Authority.

Note: ACRONYMS, ABBREVIATIONS, and SYMBOLS are provided in Appendix B.

Note: DEFINITIONS are provided in Appendix C.

3. PROGRAM IMPLEMENTATION STANDARDS

Methods for incorporating an understanding of human capabilities, limitations, and functions (including ill, injured, and deconditioned states) are to be described in an implementation process resulting in performance standards. This strategy ensures that human performance is consistently addressed with system performance throughout the system life cycle and that the design is informed and enhanced by evaluations of human performance-related risks and considers human integration at all levels of the system, from individual components to the level of the complete integrated system.

3.1 Applicability of this NASA Technical Standard

The purpose of this document is to provide all of the requirements necessary for each specific program to enable the human to be healthy and productive during the mission and obtain a human-rating certification. Applicability of individual requirements may change based on individual program parameters and must be considered to ensure cost-effective implementation of this NASA Technical Standard. Therefore, all requirements in this document are applicable to all human spaceflight programs/missions/projects unless determined otherwise and agreed to by the delegated Technical Authority based on the following criteria:

a. Gravitational Environment,
b. Mission Duration,
c. Time to receive terrestrial medical capability,
d. Radiation Environment,
e. EVA Capability (see Appendix E, Space Suit),
f. Destination,
g. Mission Phase, or
h. Other definable mission parameter.

As per NPR 7120.5, during the systems requirements phase of program or project development, the appropriate requirements will be deemed applicable based on the program mission parameters. Refer to Figure 1, Applicability, Tailoring, and Verification of Requirements for

Downloaded from http://www.everyspec.com

Programs, for the process of applicability, tailoring, and verification of requirements for programs or projects.

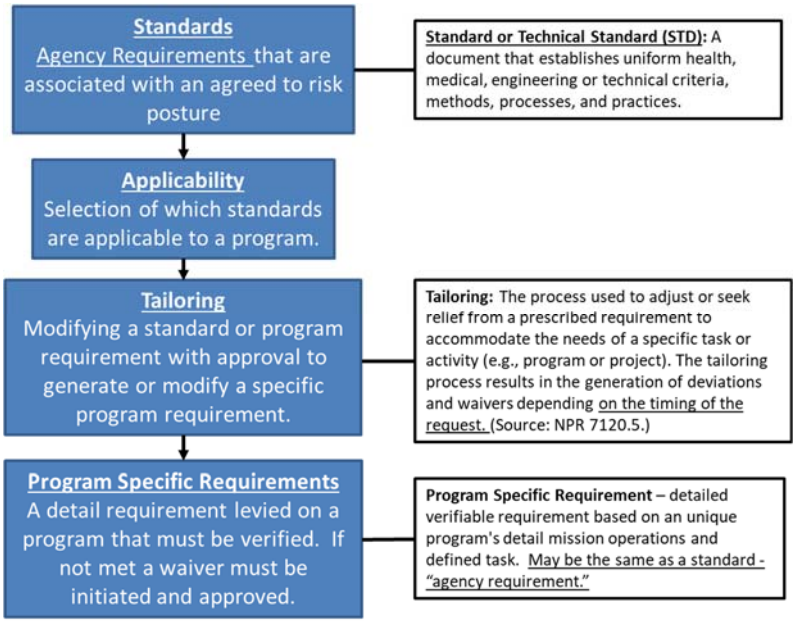

Figure 1—Applicability, Tailoring, and Verification of Requirements for Programs

3.2 Systems Engineering Processes and Requirements

This NASA Technical Standard is tightly linked with NPR 7123.1B, NASA Systems Engineering Processes and Requirements. NPR 7123.1 requires a human-centered design process along with an HSIP. The HSIP includes the implementation of integration of human considerations into the system acquisition and development processes to enhance human system design, reduce life-cycle ownership cost, and optimize total system performance. Human system domain design activities associated with manpower, personnel, training, human factors engineering, safety, health, habitability, and survivability are considered concurrently and integrated with all other systems engineering design activities. NASA-STD-3001 extends human-centric design as outlined in NPR 7123.1 to include a detailed crew task analysis.

3.2.1 Human-Centered Task Analysis

[V2 3006] Each human spaceflight program or project **shall** perform a task analysis to support hardware and operations design.

[Rationale: A detailed task analysis of crew required activities is required to determine appropriate human spacecraft designs and layout along with the appropriate operational activities. This task analysis is utilized by numerous other standards such as net habitable volume, cognitive workload, situational awareness, display design, information management, EVA suit mobility, etc.]

Downloaded from http://www.everyspec.com

4. PHYSICAL CHARACTERISTICS AND CAPABILITIES

A systems engineering process that adequately considers human performance variability and limitations during spacecraft design, development, testing, and evaluation is of critical importance to the health, safety, and performance of flight crews, as well as to the protection of hardware and systems. As with any other system component, there are limits to human capabilities. The conditions encountered during spaceflight can degrade human capabilities. These performance-limiting conditions may include environmental factors such as weightlessness and g-transitions, physiological effects such as space sickness and spatial disorientation, and other factors such as confinement and protective clothing.

The human performance envelope is bounded by physical as well as cognitive limitations. Accommodating these limitations during spaceflight is critical to all aspects of mission success, including the maintenance of crew health and safety.

Physical characteristics and capabilities include body dimensions, strength, reach, and range of motion. It is important that the design of equipment, including vehicles, spacesuits, and other interfaces, accommodates the physical characteristics of the entire user population. Adjustments for the effects of external factors such as gravity environments, clothing, pressurization, and deconditioning related to mission duration are to be included in the design.

4.1 Physical Data Sets

4.1.1 Data Sets

[V2 4001] Each program **shall** identify or develop an anthropometry, biomechanics, aerobic capacity, and strength data set for the crewmember population to be accommodated in support of all requirements in section 4 of this NASA Technical Standard.

[Rationale: Identifying the physical characteristics of the crewmember population is a major driver in the overall design of habitable spaces and the equipment used. Anthropometric data include body lengths, reach distance, body surface area, body volume, and body mass characteristics. Biomechanics data include range of motion and strength data. The physical characteristics of the crew depend on the population from which they are drawn. In the past, crews were not selected from the general population. Crews were selected mainly from military populations, and their dimensions, fitness level, and strength and gender composition were different from those of the general population. Also, human size has historically changed—the average person 50 years ago was smaller than today's average person. Developers of a system likely to be used far into the future are to consider these changes. Physical data sets will include data to accommodate mixed-gender crews; also, for international missions, data sets may represent diverse populations.]

Downloaded from http://www.everyspec.com

4.1.2 Data Set Characteristics

[V2 4002] Characteristics unique to anticipated gravity environments, clothing, protective equipment (including spacesuits), suit pressurization, external interfacing equipment, crew conditions to be accommodated, and mission duration **shall** be documented in a data set and be available for application to system, hardware, and equipment design.

[Rationale: A system developer is to identify the factors that affect human physical characteristics and show that their consideration is an integral part of the system design process.]

4.1.3 Population Definition

[V2 4003] The program **shall** define the range of the population dimensions that system designs are intended to accommodate.

[Rationale: After identifying the population from which the crew is selected, the system developer is to define the range that the design will accommodate: the upper and lower boundaries of the physical dimensions. Accepting a wide range of physical dimensions (from very large to very small) has an advantage: those who select crewmembers can choose from a wide range of backgrounds, talents, and skills. The disadvantages are related to design impacts that can occur because of this wider size range. For example, with wider range boundaries, access openings and seats have to be larger to accommodate bigger individuals while controls and panels have to be closer to accommodate the reach of the smaller individuals.]

4.1.4 Data Set Assumptions

[V2 4004] Physical data sets **shall** include age, gender, physical condition, and other appropriate and distinguishing population characteristics.

[Rationale: The physical data of the crew population selected in section 4.1.1, Data Sets [V2 4001], in this NASA Technical Standard vary with age, gender, and factors such as physical condition or other special considerations. The system developer needs to identify these population characteristics and adjust the numbers in the data set accordingly.]

4.2 Body Lengths

4.2.1 Body Length Data

[V2 4005] Body length data developed in accordance with section 4.1, Physical Data Sets, in this NASA Technical Standard **shall** be applied to the design of all elements of system, hardware, and equipment with which the crew interfaces to ensure that crew tasks can be efficiently and effectively performed.

Downloaded from http://www.everyspec.com

[Rationale: The design of all physical items that interface with the crew is to account for crew body lengths. This includes hand controls, seat dimensions, hatch opening size, the distance from the seat to controls, handle dimensions, etc.]

4.2.2 Changes in Body Length

[V2 4006] In reduced gravity, expected changes in body lengths, circumferences, and posture **shall** be accommodated in the design.

[Rationale: Microgravity significantly changes some human body lengths, circumferences, and the posture. Although it is not certain, this is also likely to be true in reduced gravity such as on the Moon. To properly size items that interface with the crew, system developers are to be aware of the gravity effects on body dimensions and design accordingly. Program-specific data sets are to be created that reflect anticipated reduced gravity environmental effects on body posture, body length, and body circumference.]

4.3 Range of Motion Data

Range of motion data define the direction and limit of movement of the human body.

[V2 4007] Range of motion data developed in accordance with section 4.1, Physical Data Sets, in this NASA Technical Standard **shall** be applied to the design of all elements of system, hardware, and equipment with which the crew interfaces to ensure that crew tasks can be efficiently and effectively performed.

[Rationale: Design constraints may dictate a space vehicle layout and tasks that force the crew to move, twist, or stretch into awkward positions. The development program will have data available that define the range of motion limits for the crew.]

4.4 Reach Data

Human reach capabilities data define the ability to touch and grasp items in the work envelope.

[V2 4008] Reach data developed in accordance with section 4.1, Physical Data Sets, in this NASA Technical Standard **shall** be applied to the design so that all crew interface items are located within the reach limits of the worst-case (i.e., most limited) crewmember in his/her working posture, using the most encumbering equipment and clothing anticipated.

[Rationale: If the crewmember is fixed in a seat or a restraint system, accurate reach limit data are critical to successful system operation. Even if crewmembers are able to move about, excessive reach to interfaces may cause errors and task delays. Worst-case should be determined by evaluating reach cases for the different combinations of anthropometry that exist in the Physical Data Sets for the expected crew.]

Downloaded from http://www.everyspec.com

4.5 Body Surface Area Data

Body surface area data define the size of the outer surface of the body.

[V2 4009] Where appropriate, body surface area data developed in accordance with section 4.1, Physical Data Sets, in this NASA Technical Standard **shall** be applied to the design of all elements of system, hardware, and equipment with which the crew interfaces to ensure that crew tasks can be efficiently and effectively performed.

[Rationale: Depending on mission or design requirements, system developers could need data describing the outer surface area of the body. This could occur when assessing radiation exposure or designing a body contact cooling system. In such cases, the data are to accurately describe the full size range of the crew.]

4.6 Body Volume Data

Body volume defines the volume of environment displaced by the body. Body volume data can describe both whole body and body segment volumes. Body volume is a static measurement and does not describe the volume required to size an area for the movements of human activity.

[V2 4010] Where appropriate, body volume data developed in accordance with section 4.1, Physical Data Sets, in this NASA Technical Standard **shall** be applied to the design of all elements of system, hardware, and equipment with which the crew interfaces to ensure that crew tasks can be efficiently and effectively performed.

[Rationale: Depending on mission or design requirements, system developers could need data describing volume of the body. In such cases, the data are to accurately describe the full size range of the crew.]

4.7 Body Mass Data

Body mass data can describe both whole body and body segments. Body mass data may include center of gravity and moment of inertia, as well as simple body mass. Body mass may be an important design consideration during acceleration and may be used to characterize design forces exerted between crewmembers and equipment such as body support systems, tools, and mobility aids. Body mass centers of gravity may be an important design consideration during dynamic mission phases and on crewmember mobility, balance, and stability.

[V2 4011] Body mass data developed in accordance with section 4.1, Physical Data Sets, in this NASA Technical Standard **shall** be applied to the design of all elements of system, hardware, and equipment with which the crew interfaces to ensure that crew tasks can be efficiently and effectively performed.

[Rationale: Propulsion and system dynamic calculations depend on accurate data for the full range of crewmember sizes. All vehicle systems with human-system interfaces are to be designed

Downloaded from http://www.everyspec.com

such that they will not be damaged after being subjected to the forces that a crewmember can impart on that interface through movement. As an example, body support systems, e.g., seats, brackets, and restraints, are to accommodate forces exerted by a suited crewmember under all anticipated acceleration and gravity environments.]

4.8 Strength

Strength refers to a person's ability to generate force. Maximum strength data can be used to design hardware that will not break under unusual circumstances such as panic application of a brake or shut-off control. Minimum strength data establish criteria that ensure all crewmembers are capable of operating expected system components and equipment.

4.8.1 Strength Data

[V2 4012] Strength data developed in accordance with section 4.1, Physical Data Sets, in this NASA Technical Standard **shall** be applied to the design of all elements of the system, hardware, and equipment with which the crew interfaces to ensure that crew tasks can be efficiently and effectively performed without injury to the crew and that hardware can be used by all crewmembers within the upper and lower ranges of anticipated strength without sustaining damage.

[Rationale: Vehicle components and equipment must be designed to allow for any crewmember to perform any of the requested tasks efficiently and effectively, thus ensuring task and/or mission success. For this reason, a task must not require more strength than can be exerted by the weakest crewmember. Vehicle components and equipment are to be designed to withstand large forces exerted by a strong crewmember during nominal operation, without breaking. Humans may inadvertently exert high forces when operating controls in emergency situations such as stopping a surface vehicle or attempting to open a hatch for emergency egress. The resulting possible damage to equipment could make it impossible to respond safely to the emergency. Program requirements are to ensure that designers have accurate strength data.]

4.8.2 Muscle Effects

[V2 4013] The effects of muscle endurance and fatigue **shall** be factored into system design.

[Rationale: Tasks with high force requirements and repetitive tasks (even with low force requirements) can cause fatigue. Additionally, since spaceflight can decrease muscle size, muscle strength, muscle power, and muscle endurance, these factors are to be considered in system design. Program requirements are to ensure that designers have accurate data of the strength of crewmembers in anticipated fatigued conditions. A fatigued crewmember should be able to perform any requested task.]

Deleted:

[V2 4014] Requirement deleted.

Downloaded from http://www.everyspec.com

4.9 Aerobic Capacity

An individual's absolute aerobic capacity determines the ability to perform a task at a given level of work.

[V2 4015] The system **shall** be operable by crewmembers with the aerobic capacity as defined in NASA-STD-3001, Volume 1.

[Rationale: Aerobic capacity information is an important engineering number, and program requirements are to ensure accurate data are available to system developers. The aerobic capacity in conjunction with the operational concept provides an upper bound for oxygen (O_2) demand, carbon dioxide (CO_2) production, heat rejection requirements, etc. This information is vital for all spacecraft Environmental Control and Life Support System (ECLSS) designs, including the extravehicular activity (EVA) suits. This information would help in sizing the primary and emergency O_2 systems, scrubbers, etc., and help the engineers perform trade studies on various suit designs based on the operational scenarios and metabolic expenditure.]

5. PERCEPTION AND COGNITION

This section articulates human perceptual and cognitive characteristics from a functional, i.e., task performance, perspective. These characteristics can be described in terms of capabilities and limitations that vary such as age, gender, fatigue, and exposure to environmental factors. As there are limitations within the design of system components, there are limits to human capabilities. The environmental conditions of spaceflight can further degrade human capabilities. Systems need to be designed to support human perceptual and cognitive capabilities to meet system performance requirements.

For detailed discussions regarding human performance capabilities, e.g., visual perception, auditory perception, cognition, and workload, see chapter 5, Human Performance Capabilities, of the HIDH. For detailed discussions regarding the design of user interfaces, e.g., visual acquisition of displays, visual displays, layout of displays and controls, see chapter 10, Crew Interfaces, of the HIDH.

5.1 Perceptual and Cognitive Characteristics and Capabilities

5.1.1 Visual Capabilities

Visual capabilities include, at a minimum, visual acuity, spatial contrast sensitivity, visual accommodation, field of regard, color discrimination, stereoscopic depth perception, and temporal contrast sensitivity. Further explanation of these terms can be found in Appendix C, Definitions.

[V2 5001] Visual capabilities **shall** be accommodated in the design of all visual interface elements for anticipated levels of crew capability and anticipated levels of task demands.

Downloaded from http://www.everyspec.com

[Rationale: Design of interface elements such as text, graphics, and icons, as well as design of the display itself and its placement relative to the user, are to ensure that relevant visual information is visible and readable (text) or interpretable (graphical icons or symbols) while a crewmember performs mission tasks. Determination of anticipated levels of crew capability and anticipated levels of task demands is based on a detailed task analysis.]

5.1.2 Auditory Perceptual Capabilities

Auditory capabilities include, at a minimum, absolute threshold of hearing, auditory localization, and speech intelligibility. Auditory localization refers to the aural sensation of the location of a sound in space. Speech intelligibility refers to the ability to correctly identify speech material (typically words) in accordance with a standardized testing method.

[V2 5002] Auditory perceptual capabilities **shall** be accommodated in the design of all auditory system elements that interface with the crew for anticipated levels of crew capability and anticipated levels of task demands.

[Rationale: Audio-communications can play an essential role in completing mission operations. This is especially true for operations that require coordination of individuals remote from each other (a feature of all space missions). Audio-communications are also critical to successful completion of non-scripted operations such as emergency recovery from an off-nominal event. Communication engineering calculations require metrics for ensuring speech intelligibility and quality under all mission phases. All vehicle systems are to be designed with respect to the noise and vibration environment and other sources of auditory masking (from excessive noise) and to accommodate suited versus unsuited conditions, e.g., headset versus loudspeaker conditions. Determination of anticipated levels of crew capability and anticipated levels of task demands can be made through a detailed task analysis.]

5.1.3 Sensorimotor Capabilities

Sensorimotor functional capabilities include balance, locomotion, eye-hand coordination, visual control, tactile perception, and orientation perception.

[V2 5003] Sensorimotor capabilities **shall** be accommodated in the design of all display-control system elements that interface with the crew for anticipated levels of crew capability and anticipated levels of task demands.

[Rationale: Controls and displays can provide information to the operator through sensorimotor perception channels. Requirements are to be written to ensure successful use of that information channel. Transmittal of information through sensorimotor channels is dependent on the nature of the information (rate, direction, quantity, etc.), clothing worn by the operator (gloves, footwear, helmet, etc.), control and display characteristics (control shape, control forces, display orientation, etc.), and the environment (vibration, lighting, acceleration, gravity, etc.). Determination of anticipated levels of crew capability and anticipated levels of task demands is based on a detailed task analysis.]

Downloaded from http://www.everyspec.com

5.1.4 Cognitive Capabilities

Cognitive capabilities include attention, memory, decision making, problem solving, logical reasoning, and spatial cognition applied in both an individual and team.

[V2 5004] Cognitive performance capabilities **shall** be accommodated in the design of all system elements that interface with the crew for all anticipated levels of crew capability and all anticipated levels of task demands.

[Rationale: Accommodating cognitive performance capabilities is important to ensure optimal task performance and crew safety. Design of hardware, including displays and controls, are to take into account the capabilities and limitations of humans to acquire, interpret, and retain information such that the relevant information is available and intelligible. This is especially important during spaceflight, where microgravity can cause deconditioning and affect spatial orientation, radiation can induce acute cognitive deficits, and where stress can affect several cognitive processes. For detailed discussions regarding the effects of stress on cognitive performance, see chapter 5, Human Performance Capabilities, of the HIDH. Determination of anticipated levels of crew capability and anticipated levels of task demands is based on a detailed task analysis with consideration of all nominal, off-nominal, and emergency scenarios, including those of low probability.]

5.2 Integrated Human Performance Capabilities

The system needs to adequately support the crew to operate safely in both nominal and off-nominal situations, i.e., that the integrated design remains within acceptable performance envelopes. Indications of adequate crew support include: (1) tasks can be accomplished within time and performance criteria, (2) the human-system interface supports a high degree of onboard situational awareness (SA), (3) the system design and allocation of functions provide acceptable workload levels to ensure vigilance and a balance between underload/boredom and overload, and (4) the interfaces minimize operator error and provide for error detection and recovery when events do occur.

5.2.1 Time and Performance

Effective task performance includes timeliness and accuracy: the task is to be performed successfully within an appropriate timeframe to meet mission objectives.

[V2 5005] The ability to perform tasks in a timely and accurate manner **shall** be accommodated in the design of all system elements that interface with the crew for anticipated levels of crew capability and anticipated levels of task demands.

[Rationale: Factors to be considered in design include, but are not limited to: time to complete the task; time to train for the task; consequence and time to recover from errors; the nature, type (e.g., independent versus team tasks) and environmental conditions of the task; and the state of

Downloaded from http://www.everyspec.com

the human and the team (e.g., deconditioned, lack of adaptation to microgravity, sleep deprived). Some prominent aerospace accidents have been traced to the human's inability to perform emergency operations under the time demands and environmental challenges present, emphasizing the need for design that integrates crew capability with task demands. Determination of anticipated levels of crew capability and anticipated levels of task demands is based on a detailed task analysis.]

5.2.2 Situational Awareness (SA)

SA refers to the process and outcome of understanding the current context and environment, evaluating that situation with respect to current goals, and projecting how that situation will evolve in the future.

[V2 5006] Systems **shall** provide the SA necessary for efficient and effective task performance and provide the means to recover SA, if lost, for anticipated levels of crew capability and anticipated levels of task demands.

[Rationale: Lack of SA has been associated with numerous accidents and incorrect decisions by flight crews in commercial aviation and in ground-based simulation of spacecraft operations. To maximize SA and optimize operational accuracy and efficiency, designers are to perform a detailed information requirements analysis of all onboard operations and ensure that the crew-vehicle interfaces provide all required information to perform the operation. A useful and effective system design supports the crewmember's ability to rapidly and accurately assess the current situation. Occasional loss of SA is expected in an operational setting where crew may have to unexpectedly move from task to task as events demand. It is important that the system design provides the necessary information, cues, or indicators to help the crewmember easily recover SA. Determination of anticipated levels of crew capability and anticipated levels of task demands is based on a detailed task analysis.]

5.2.3 Nominal Cognitive Workload

Cognitive workload arises from task and environmental demands imposed on humans, human strategies for coping with task demands, and contextual system and environmental factors that may affect human performance.

[V2 5007] The system **shall** provide crew interfaces that, when used to perform nominal crew tasks, result in Bedford Workload Scale ratings of 3 or less (or equivalent rating on another validated workload scale).

[Rationale: Metrics of cognitive workload measure the mental demands required of a person to perform a given task. Appropriate workload levels keep the crewmember engaged in the task, while allowing spare mental capacity to deal with concurrent tasks or issues. Some of the most safety-critical decisions and actions associated with operating a spacecraft are carried out in situations where the crew is multi-tasking, processing numerous inputs, and making decisions concerning multiple, possibly unrelated, problems. Work may also demand abrupt shifts between

Downloaded from http://www.everyspec.com

tasks performed alone and tasks relying on others' inputs. Likewise, environmental stressors such as radiation and altered atmospheric composition or pressure may impede the ability to adapt to changes in cognitive workload. Excessive workload demands on any one task can cause the operators to exclusively focus on one problem or approach to performing the tasks, leaving little or no spare capacity to deal with any other problems that may occur. Therefore, having designed a human-system interface to support a crew task, designers are to assess the operation as part of a human-in-the-loop simulation to determine the workload associated with that operation. If the cognitive workload is judged to be so high that a human has little or no spare capacity to deal with a concurrent problem, the task and supporting interfaces are to be redesigned. The Bedford Workload Scale has been selected by NASA as the workload verification method for a number of program workload requirements, as of the publication of this volume. However, the NASA Task Load Index (TLX) may be preferred for developmental testing, due to its diagnostic properties. Other validated indicators of workload may be used by programs with approval from the Health and Medical Technical Authority.]

5.2.4 Off-Nominal Cognitive Workload

[V2 5008] The system **shall** provide crew interfaces that when used to perform off-nominal crew tasks result in a Bedford Workload Scale rating of 6 or less (or equivalent rating on another validated workload scale).

[Rationale: During off-nominal events, it is important to ensure crewmembers' workload is not excessively high. High workload can leave an operator with little or no spare mental capacity to contend with additional demands that, during an off-nominal situation, could have significant negative outcomes. The Bedford Workload Scale has been selected by NASA as the workload verification method for a number of program workload requirements, as of the publication of this volume. However, the TLX may be preferred for developmental testing, due to its diagnostic properties. Other validated indicators of workload may be used by programs with approval from the Health and Medical Technical Authority.]

6. NATURAL AND INDUCED ENVIRONMENTS

Natural and induced environmental factors include air, water, contamination, acceleration, acoustics, vibration, radiation, and temperature. Environmental design factors that can enhance human performance such as crew station layout and lighting are discussed in section 8, Architecture, in this NASA Technical Standard. Overall, the system's environment is to be compatible with tasks to be performed and promote crew health and performance.

6.1 Trend Analysis of Environmental Data

[V2 6001] The system **shall** provide environmental monitoring data in formats compatible with performing temporal trend analyses.

[Rationale: Requirements are to consider all environmental parameters that may require trend analysis for a given mission. Trending of environmental parameters such as internal

Downloaded from http://www.everyspec.com

atmosphere constituents, temperature, humidity, water, acoustics, and radiation (see sections 6.2 through 6.8 in this NASA Technical Standard for the detailed requirements) is necessary for both anticipating harmful conditions before they occur and troubleshooting using previously stored data. To properly trend, aspects of the data such as the measurement rate are also to be considered, as some parameters may otherwise only be measured infrequently.]

6.2 Internal Atmosphere

A safe, breathable atmosphere is critical to human health and performance. Early identification of potential air quality issues enables mitigation by design. Monitoring atmospheric quality and evaluating trends are essential. The system is to be robust enough to control or allow crew control of atmospheric pressure, humidity, temperature, ventilation flow rate, airborne particulates, partial pressure of O_2 (ppO_2), partial pressure of CO_2 ($ppCO_2$), and trace contaminants within ranges necessary to maintain human health and safety. Although the following requirements address these components individually, they have to be considered as a whole because they are dependent on each other. Additional information about the interplay among internal atmosphere components and the effects on the human is available in section 6.2 of the HIDH. An iterative process should be employed to integrate the human system internal atmospheric limits into the design process, ensuring optimization of the design to afford the most protection possible, within other constraints of the vehicle systems. Atmospheric requirements specific to suited operations can be found in section 11.1, Suit Design and Operations, in this NASA Technical Standard.

6.2.1 Atmospheric Constituents

6.2.1.1 Inert Diluent Gas

[V2 6002] For mission durations in excess of 2 weeks, the atmosphere **shall** contain a physiologically inert diluent gas to prevent lung collapse.

[Rationale: A diluent gas, in addition to O_2, is required in nominal, long-duration, breathable atmospheres to prevent lung collapse, in addition to reducing the ignition/flammability threshold. The choice of diluent gas is dependent on many factors, including physiological activity and contribution to decompression sickness (DCS).]

6.2.1.2 O_2 Partial Pressure Range for Crew Exposure

[V2 6003] The system **shall** maintain inspired oxygen partial pressure (P_IO_2) in accordance with Table 1, Inspired Oxygen Partial Pressure Exposure Ranges.

[Rationale: For all systems, the range of ambient dry-gas ppO_2 should be considered in the context of P_IO_2. Since physiological limits for hypoxic (and hyperoxic) exposure during spaceflight are unknown, systems designed for humans should be normoxic unless strong rationale is provided for an alternative suggestion. For confined and enclosed spaces at sea

Downloaded from http://www.everyspec.com

level, the Occupational Safety and Health Administration (OSHA) defines oxygen-deficient atmosphere as <19.5%, and oxygen-enriched atmosphere as >22% (Electronic Code of Federal Regulations, 1915.12(a)(2), March 28, 2017) with a correlating normoxic P_IO_2 range between 139-157 mmHg. The OSHA-enriched atmospheric limit is more applicable to material flammability than human hyperoxic limit. It is generally accepted that there are no medical or performance issues with constant exposure to ½ an atmosphere of O_2 partial pressure (Clarke, J.M., Oxygen Toxicity (Chapter 6). In: The Physiology and Medicine of Diving (4th ed), Bennett, P.B., Elliott, D.H. (eds). W.B. Saunders Company Ltd: Philadelphia, 1993, pp. 153-69); this is a ppO_2 of 7.35 psia, or 380 mmHg, or as P_IO_2, it is 333 mmHg. NASA operates the extravehicular mobility unit (EMU) at 4.3 psia with 100% O_2, so this is a ppO_2 of 222 mmHg; or as P_IO_2, it would be 175 mmHg, and there are no performance or medical issues to date with this limit. A practical and defensible hyperoxic exposure limit would be a P_IO_2 of 333 mmHg with the assumption that adaptations to microgravity do not modify this terrestrial limit. As far as a hypoxic limit, it has been shown that a mildly hypoxic vehicle system atmosphere as part of a denitrogenation protocol to reduce the risk of DCS is advantageous during spaceflight (e.g., shuttle 10.2 psia/26.5% O_2), as well as recommended by the Exploration Atmospheres Working Group and endorsed by Human Exploration and Operations Mission Directorate (Exploration Atmospheres, HEOMD memo, February 2013). The current acceptable operational hypoxia limit during spaceflight for P_IO_2 is 127 mmHg for short duration missions (<30 days) only and short duration (<1 week) human exposures, and then only when it is shown to improve the overall risk posture for flight crew health and performance (Level II JSC CMO HMTA Position on Potential Atmospheres for Exploration, SA-12-067, August 8, 2012). These guiding P_IO_2 values may change as further research yields information to better define the physiological limits and acceptable duration for an alternative spaceflight system environment.]

Downloaded from http://www.everyspec.com

Table 1—Inspired Oxygen Partial Pressure Exposure Ranges

Inspired O_2 partial pressure P_IO_2 = (PB-47)*FIO2	Normoxia Target Range	Indefinite Hyperoxia Upper Limit	Short-Term Hyperoxia Upper Limit	Mild Hypoxia Lower Limit
P_IO_2 (mmHg) P_IO_2 = (PB-47)*FIO2	145-155	356	791	127
P_IO_2 (psia)	2.8-3.0	6.9	15.3	2.5
Acceptable Duration	Indefinite	Indefinite	6-9 Hours *	1 week**
Examples	Habitat and Spacesuit Minimum	EVA and Cabin Depress In-Suit Survival	O_2 Prebreathe for EVA Preparation	EVA Preparation (ISS Campout, Shuttle 10.2, Exploration Atmosphere of 8.2 psia and 34% O_2)

PB- Ambient Barometric Pressure
F_I - Fractional concentration of inspired oxygen
FIO2 – The dry-gas decimal fraction of ambient O_2
* From Johnson Procedural Requirements (JPR) 1880.4, Requirements and Limitations for Exposure to Reduced Atmospheric Pressure. Page 6 under subsection "g" shows the limits for prebreathe in a spacesuit. The limit is 9 hours when that is the only exposure to enriched O_2 in a 48-hour period. The limit is 6 hours when it is the only exposure to enriched O_2 in a 24-hour period and also states that consecutive daily exposures shall not exceed 5 consecutive days.
** At the time of this publication, 1 week was the accepted limit for this hypoxic exposure. Research and/or in-flight surveillance is proposed to evaluate the possibility of extending this duration.

6.2.1.3 Nominal Vehicle/Habitat Carbon Dioxide Levels

[V2 6004] The system shall limit the average 1-hour CO_2 partial pressure ($ppCO_2$) in the habitat volume to no more than 3 mmHg (760 mmHg cabin pressure).

[Rationale: Achieving this level is dependent on individual and total crew generation of CO_2 for all planned activities (factoring in metabolic rates and respiratory quotient) appropriate CO_2 scrubbing and adequate ventilation flow rates to ensure that no localized pockets of CO_2 are generated throughout the habitat.

Note: Off-nominal CO_2 values are not included within this NASA Technical Standard due to the unique circumstances of each mission (expected human performance, duration of exposure, access to medical care, etc.) and will be derived as a lower level program/project requirement.]

Downloaded from http://www.everyspec.com

6.2.2 Atmospheric Pressure

6.2.2.1 Total Pressure Tolerance Range for Indefinite Crew Exposure

[V2 6006] The system **shall** maintain the pressure to which the crew is exposed to between 26.2 kPa < pressure ≤ 103 kPa (3.8 psia < pressure ≤ 15.0 psia) for indefinite human exposure without measurable impairments to health or performance.

[Rationale: Designers and physiologists have to evaluate and trade off the various atmospheric combinations. A low total pressure is desirable because it allows simple transfer to a low pressure EVA suit. (Low pressure EVA suits are less stiff and allow greater range of motion). Low total pressure requires a higher percentage of oxygen in the atmosphere to provide an acceptable ppO_2. Oxygen-rich atmospheres, however, present safety hazards because of their ability to feed fires. The lowest pressure at which normoxia (P_IO_2 = 149 mmHg) is maintained at 100% O_2 is 3.8 psia. Total pressure has to be considered in conjunction with O_2 and CO_2 requirements. Under certain spacesuit operations (e.g., DCS treatment, leak checks), the crewmember may be exposed to pressure above or below this range for a limited period of time.]

6.2.2.2 Rate of Pressure Change

[V2 6007] The rate of change of total internal vehicle pressure **shall** not exceed 13.5 psi/min.

[Rationale: The rate of change of pressure is to be limited to prevent injury to crewmembers' ears and lungs during depressurization and repressurization. The positive rate of change limit is designed to prevent barotraumas in spaceflight conditions, where microgravity may have affected head and sinus congestion, and is therefore much more conservative than the 30 psi/min (1550 mmHg/min) (75 ft/min) descent rate limit allowed by the U.S. Navy dive manual. The negative rate of change limit is consistent with the U.S. Navy dive manual 13.5 psi/min (700 mmHg/min) (30 ft/min) ascent rate allowance.]

6.2.2.3 Decompression Sickness (DCS) Risk Identification

[V2 6008] Each program **shall** define mission-unique DCS mitigation strategies to achieve the level of acceptable risk of DCS as defined in NASA-STD-3001, Volume 1, section 4.4.3.6.1, Decompression Sickness Prevention.

[Rationale: DCS risk limits have been defined to develop coordinated requirements for the vehicle and EVA suit including: total pressure, ppO_2 and prebreathe before vehicle or suit depressurization, which are all variables in DCS risk.]

Downloaded from http://www.everyspec.com

6.2.2.4 Decompression Sickness Treatment Capability

[V2 6009] The system **shall** provide a DCS treatment capability.

[Rationale: DCS is a potential hazard of spaceflight and EVA because of changes in the operational pressure environment. Rapid and appropriate intervention is required to optimize the outcome for the affected crewmember. If treatment for DCS is instituted quickly, the outcome of therapy has a higher probability of success and will likely require less magnitude and duration of hyperbaric O_2 therapy.]

It is important, therefore, to have the crewmember back to his/her initial saturation pressure as soon as possible, which may resolve DCS symptoms. Initial saturation pressure is defined as the highest pressure to which the crewmember has been exposed during the 36 hours before beginning the EVA. If not addressed quickly, higher pressures may be required to address DCS symptoms. The U.S. Navy Treatment, Table 6, Oxygen Treatment of Type II Decompression Sickness (treatment in a hyperbaric treatment facility), is the terrestrial standard for treating most forms of DCS; however, the terrestrial standard may not be achievable, or required, because the resources required to support it would be prohibitive, and the expected outcomes from sub-terrestrial standard therapy are likely to be adequate for altitude-induced DCS symptoms.

6.2.3 Atmospheric Humidity

6.2.3.1 Relative Humidity

[V2 6010] Average relative humidity (RH) **shall** be maintained between 25% and 75% over each 24-hour period during all mission operations, excluding suited operations of less than 8 hours and post-landing through hatch opening.

[Rationale: Average humidity is to be maintained above this lower limit (25%) to ensure that the environment is not too dry for the nominal functioning of mucous membranes and to prevent static electricity buildup within the cabin, which could pose an increased electrical hazard to people. Average humidity is to be maintained below this upper limit (75%) for crew comfort and to limit formation of condensation. Excess moisture in the glove can contribute to trauma at the fingertips. Considerations are to be given for expected elevations in RH such as during exercise.]

6.2.3.2 Post-Landing Relative Humidity

[V2 6011] For nominal post-landing operations, the system **shall** limit RH to the levels in Table 2, Average Relative Humidity Exposure Limits for Post-Landing Operations.

[Rationale: Average humidity is to be maintained above the lower limits stated to ensure that the environment is not too dry for the nominal functioning of mucous membranes. During low humidity exposures, additional water is to be provided to the crew to prevent

Downloaded from http://www.everyspec.com

dehydration. Humidity is to be maintained below the upper limits for crew comfort to allow for effective evaporation and to limit the formation of condensation. In unsuited scenarios, high RH may interfere with the nominal evaporation process that enables perspiration to cool the body. Thus, high RH in warm environments can pose an additional hazard for core body temperature excess.]

Table 2—Average Relative Humidity Exposure Limits for Post-Landing Operations

Average RH	Time Allowed
25% < RH ≤ 75% (nominal range[1])	Indefinite[2]
75% < RH ≤ 85%	24 hr[3]
85% < RH ≤ 95%	12 hr[3]
95% < RH	8 hr[3]

1. Nominal humidity range is included for completeness.
2. Assumes temperature is within nominal range in accordance with section 6.2.4.2, Temperature Range [V2 6013], in this NASA Technical Standard.
3. Only after doffing a suit post-landing; duration may be shorter if temperature is outside nominal range (specified in section 6.2.4.2, Temperature Range [V2 6013], in this NASA Technical Standard).

6.2.4 Atmospheric Comfort and Temperature

6.2.4.1 Comfort Zone

[V2 6012] The system **shall** be able to maintain thermal conditions in the comfort zone as shown in Figure 2, Environmental Comfort Zone, throughout all mission phases, including planned contingencies.

[Rationale: The comfort zone is defined as the range of environmental conditions, e.g., temperature and RH, in which humans can achieve thermal comfort and not have their performance of routine activities affected by thermal stress. Thermal comfort is affected by the work rate, clothing, and state of acclimatization. This combination of environmental conditions is important to define, since humidity and temperature requirements may be met separately but together may be outside of the comfort zone. This requirement does not apply to EVA suits. Corresponding EVA suit requirements addressing temperature, humidity, pressure, and other elements that affect comfort in a spacesuit are defined in section 11 of this NASA Technical Standard.]

Downloaded from http://www.everyspec.com

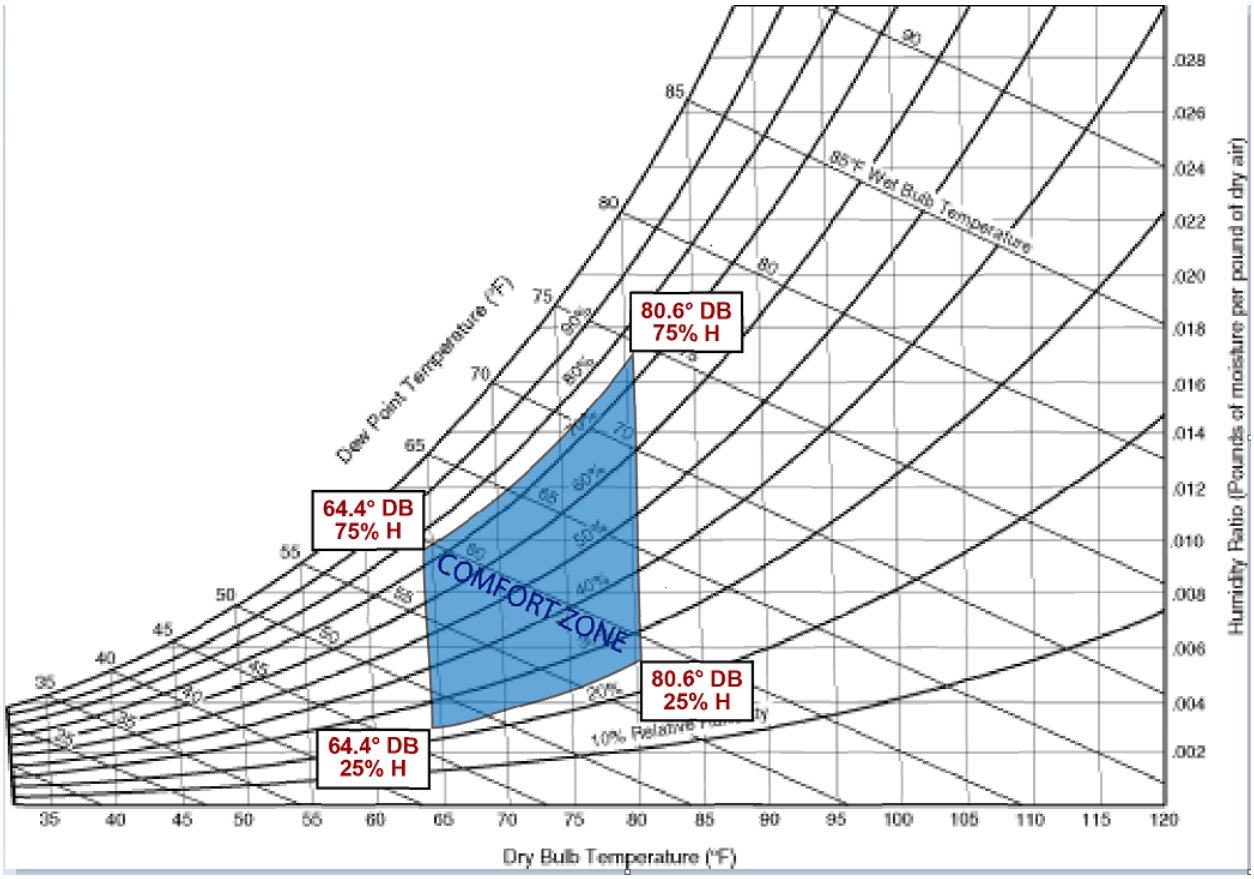

Figure 2—Environmental Comfort Zone

6.2.4.2 Temperature Comfort Range

[V2 6013] The system **shall** maintain the atmospheric temperature within the range of 18 ºC (64.4 ºF) to 27 ºC (80.6 ºF) during all nominal operations, excluding suited operations, ascent, entry, landing, and post-landing.

[Rationale: This temperature range is defined as the range of environmental conditions in which humans can achieve thermal comfort and not have their performance of routine activities affected by thermal stress.]

6.2.4.3 Crewmember Heat Storage

[V2 6014] The system **shall** prevent the energy stored by each crewmember from exceeding the cognitive deficit onset (CDO) limits defined by the range 4.7 kJ/kg (2.0 Btu/lb) > ΔQ stored > -4.1 kJ/kg (-1.8 Btu/lb) during pre-launch operations, ascent, entry, descent, landing, post-landing, contingency, and suited operations longer than 12 hours, where ΔQ stored is calculated using a validated and NASA-approved thermoregulatory model, such as 41-Node Man (JSC-33124, 41-Node Transient Metabolic Man Computer Program Documentation – A thermal regulatory model of the human body with environmental suit applications) or the Wissler model.

Downloaded from http://www.everyspec.com

[Rationale: The intent of this NASA Technical Standard is to protect the crewmember from heat-related illness. Heat stored by crewmembers during launch, landing, and off-nominal suited operations may also need to be addressed as part of total system design and human accommodation. These thermal limits are intended to cover brief temperature excursions related to contingency situations, including excessively high metabolic rates, or operational exposure to excessive ambient heat loads, including suited operations.]

6.2.5 Atmospheric Control

6.2.5.1 Atmospheric Control

[V2 6017] The system **shall** allow the crew to control atmospheric pressure, humidity, temperature, ventilation, and ppO_2.

[Rationale: The ability to control atmospheric conditions is important for crew comfort, e.g., temperature and humidity, and for mission tasks, e.g., ppO_2 and total pressure for expected cabin depressurization, to ensure efficient and effective performance. This requirement does not apply to spacesuits. The corresponding spacesuit requirement is defined in section 11.4, Suited Atmospheric Control [V2 11033], in this NASA Technical Standard.]

6.2.5.2 Remote Adjustment

[V2 6019] The system **shall** provide for the remote adjustment of atmospheric pressure, temperature, and ppO_2.

[Rationale: The ability to adjust atmospheric parameters remotely is important for cases in which a crewed vehicle is to dock with an uncrewed vehicle, whose atmosphere is to be habitable before ingress. This may be done from other spacecraft located in microgravity or on planetary surfaces or from Earth-based control centers.]

6.2.6 Atmospheric Data Availability

6.2.6.1 Atmospheric Data Recording

[V2 6020] For each isolatable, habitable compartment, the system **shall** automatically record pressure, humidity, temperature, ppO_2, and $ppCO_2$ data.

[Rationale: Access to atmospheric data is needed for each habitable compartment (that can be isolated with a pressure hatch) to which the crew has access, as each of these parameters is critical to crew health and comfort. Additionally, the ability to view past recorded data helps to prevent environmental conditions that could harm the crew or vehicle and can aid in the effort to troubleshoot problems. This requirement does not apply to spacesuits. The corresponding spacesuit requirement is defined in section 11.5, Suited Atmospheric Data Recording [V2 11034], in this NASA Technical Standard.]

Downloaded from http://www.everyspec.com

6.2.6.2 Atmospheric Data Displaying

[V2 6021] The system **shall** display real-time values for pressure, humidity, temperature, ppO_2, and $ppCO_2$ data to the crew.

[Rationale: These atmospheric parameters are critical to human health and comfort, and access to this atmospheric data needs to be provided to the crew. The crew needs to view the environmental status in real time to help prevent environmental conditions that could harm them or the vehicle. This requirement does not apply to spacesuits. The corresponding spacesuit requirement is defined in section 11.6, Suited Atmospheric Data Displaying [V2 11035], in this NASA Technical Standard.]

6.2.7 Atmospheric Monitoring and Alerting

6.2.7.1 Atmospheric Monitoring and Alerting

[V2 6022] The system **shall** monitor atmospheric parameters, including atmospheric pressure, humidity, temperature, ppO_2, and $ppCO_2$ and alert the crew when they are outside safe limits.

[Rationale: Systems are to be capable of monitoring the atmosphere to identify when parameters are outside set limits so that the system can alert the crew and the crew can take appropriate actions to maintain health and safety. See sections 10.3.4, Audio Displays, and 10.7.2, Caution and Warning, in this NASA Technical Standard for additional information. This requirement does not apply to spacesuits. The corresponding spacesuit requirement is defined in section 11.7, Suited Atmospheric Monitoring and Alerting [V2 11036], in this NASA Technical Standard.]

6.2.7.2 Trace Constituent Monitoring and Alerting

[V2 6023] The system **shall** monitor trace volatile organic compounds (VOCs) in the cabin atmosphere and alert the crew when they are approaching defined limits.

[Rationale: Monitoring and alerting are required to identify when hazardous contaminants are detected and to alert the crew so they can take appropriate actions to maintain health and safety. Trace contaminant monitoring is important for identifying a wide range of contaminants that may impact human health and safety, including toxic substances that cannot be predicted now or substances that are not normally thought of as part of the atmosphere. Accepted limits may be based on SMACs or on agreements from international partners. There may be specific mission scenarios (e.g., short-duration missions and alternate controls) where trace contaminant monitoring may not be required.]

Downloaded from http://www.everyspec.com

6.2.7.3 Combustion Monitoring and Alerting

[V2 6024] The system **shall** continuously monitor toxic atmospheric components that would result from pre-combustion and combustion events before, during, and after the event and alert the crew in sufficient time for them to take appropriate action.

[Rationale: Monitoring and alerting are required to identify when toxic components are detected and to alert the crew so they can take appropriate actions to maintain health and safety. Because of the extreme danger of combustion in a spacecraft, alerting is to occur quickly enough, e.g., within 5 seconds, to allow the crew to address the hazard, e.g., locating and using a fire extinguisher.]

6.2.7.4 Contamination Monitoring and Alerting

[V2 6025] The system **shall** monitor and display atmospheric compound levels that result from contamination events, e.g., toxic release, systems leaks, or externally originated, before, during, and after an event and alert the crew in sufficient time for them to take appropriate action.

[Rationale: Alerting the crew when contaminants are present is necessary for them to take appropriate action to maintain health and safety. In addition, monitoring after the event is important to verify that levels are safe for human exposure. Monitoring is required to identify when components are detected so that alerting can occur. Potential contaminants, e.g., hydrazine, monomethylhydrazine (MMH), nitrogen tetroxide/nitrogen dioxide and ammonia, need to be monitored after EVA.]

6.3 Water

The challenges of providing quality water are different for different system designs and different water sources, e.g., recycled humidity condensate and ground-supplied water. In the design process, early identification of potential water quality impacts enables mitigation by design. Water quality monitoring through the use of in-flight and pre-flight analysis techniques are essential tools for use in verifying water quality, evaluating trends, and documenting potential exposures.

6.3.1 Water Quality

6.3.1.1 Water Physiochemical Limits

[V2 6026] At the point of crew consumption or contact, the system **shall** provide potable water that is safe for human use, including drinking, food rehydration, personal hygiene, and medical needs and is aesthetically acceptable.

[Rationale: Point of crew consumption or contact refers to the location from which potable water is dispensed for use in drinks, food rehydration, personal hygiene, and medical needs and any potential in-flight maintenance sites. Safe water pollutant levels have been established for

Downloaded from http://www.everyspec.com

certain prioritized compounds specifically for human-rated space vehicles by the JSC Toxicology and Environmental Chemistry Laboratory in cooperation with a subcommittee of the National Research Council Committee on Toxicology; however, the current list in JSC-63414, Spacecraft Water Exposure Guidelines (SWEGs), is not all inclusive, and other compounds may be of concern. For these other compounds, the United States Environmental Protection Agency maximum contaminant levels can be utilized as conservative screening limits. (For additional guidance, reference chapter 6, Natural and Induced Environments, in the HIDH.) To determine which contaminants are present, a complete chemical characterization of potential water sources is to be performed. Evaluation of aesthetic properties is important to ensure that the potable water does not have an adverse odor or taste such that it would cause crewmembers to diminish consumption and increase the risk of underhydration or dehydration of the crewmember. Aesthetic acceptability can either be assessed qualitatively by an evaluation panel or indirectly through compliance with the applicable water quality requirements.]

6.3.1.2 Water Microbial Limits

[V2 6027] At the point of crew consumption or contact, the system **shall** provide potable water quality at or below the microbial limits of Table 3, Potable Water Microbiological Limits, to the crew for drinking, food rehydration, personal hygiene, and medical needs.

[Rationale: Microbially safe water is essential to prevent infection and mitigate risk to crew health and performance. Point of crew consumption or contact refers to the location from which potable water is dispensed for use in drinks, food rehydration, personal hygiene, and medical needs and any potential in-flight maintenance sites.]

Table 3—Potable Water Microbiological Limits

Characteristic	Maximum Allowable	Units
Bacterial Count	50	CFU/ml
Coliform Bacteria	Non-detectable per 100 ml	-
Fungal Count	Non-detectable per 100 ml	-
Parasitic Protozoa, e.g., Giardia and Cryptosporidium	0	-

Note: CFU = colony forming unit.

Deleted:

[V2 6028] Requirement deleted.

6.3.1.3 Total Iodine Concentration at the Point of Consumption

[V2 6105] The total iodine concentration in drinking water **shall** be ≤0.20 mg/L at the point of consumption.

[*Rationale: The intent of this requirement is to protect the crewmember from iodine-related illness if iodine is used as the biocide for the potable water system. This recommended limit includes iodine from all sources, including dietary and potable water consumption. Dietary*

Downloaded from http://www.everyspec.com

exposures account for approximately half of this goal, thus constraining the allowable iodine contributions from drinking water to a rounded value of 0.20 mg/L. These values are based on experience from the Shuttle program; refer to Section 6.3-1 of the HIDH, NASA/SP-2010-3407. Allowable concentrations for other biocide alternatives are referenced in JSC-63414.]

6.3.2 Water Quantity

6.3.2.1 Drinking Water Quantity

[V2 6029] The system **shall** provide a minimum of 2.0 kg (4.4 lb) of potable water per crewmember per mission day for drinking.

[Rationale: To maintain crewmember hydration status and allow crewmembers to perform duties nominally, 2.0 kg (4.4 lb) of drinking water is needed. This quantity is also required for adequate urine output to clear metabolic wastes and to account for perspiratory and other insensible losses. Intake less than 2.0 kg (4.4 lb) will increase the risk of underhydration or dehydration of the crewmember, with consequences ranging from poor communication and crew performance caused by dry mucous membranes, nosebleeds, headache, malaise, and fitful sleep, to urinary tract infection or urinary calculi if the underhydration state is continued.]

6.3.2.2 Food Rehydration Water Quantity

[V2 6030] The system **shall** provide sufficient quantities of potable water per crewmember per mission day to support food rehydration beyond the water quantity specified in section 6.3.2.1, Drinking Water Quantity [V2 6029], in this NASA Technical Standard.

[Rationale: Potable water quantities are to be defined for rehydration use, which will depend on the mission length, number of crew, and design of the food system. Design solutions for spaceflight food systems have typically included quantities of dried food and beverages that require rehydration with measured amounts of ambient or hot temperature potable water.]

6.3.2.3 Hot Rehydration Water Quantity

[V2 6031] The system **shall** provide sufficient quantities of hot potable water to support hot food and beverage hydration for mission durations greater than 3 days.

[Rationale: For missions longer than a few days, hot food and beverages provide an important psychological benefit. The amount of hot water to be provided depends on the number of crew, mission length, and types of food and beverage available.]

6.3.2.4 Personal Hygiene Water Quantity

[V2 6032] The system **shall** provide a sufficient quantity of potable water per crewmember per day for personal hygiene.

Downloaded from http://www.everyspec.com

[Rationale: Potable water quantities are to be defined for personal hygiene use, which will depend on the mission length, number of crew, and design of the hygiene system. Water may not be required for some hygiene activities where alternatives, e.g., rinseless shampoo, pre-wetted towels, are provided.]

6.3.2.5 Eye Irrigation Water Quantity

[V2 6033] The system **shall** provide a minimum of 0.5 kg of immediately available potable water for eye irrigation for particulate events, e.g., dust, foreign objects, and other eye irritations.

[Rationale: Eye irrigation is required for spaceflight, based on experience and data from Shuttle, ISS, and Apollo programs. Eyewash capability for particulate events is expected, especially for lunar missions because of the increased risk of exposure to dust on the lunar surface.]

6.3.2.6 Medical Contingency Water Quantity

[V2 6034] The system **shall** provide a minimum of 5 kg of immediately available water for each medical contingency event, e.g., chemical exposure/burn, as determined by the human spaceflight program.

[Rationale: Water for medical contingency use is required for many situations, including eye and wound irrigation during spaceflight, based on experience and data from Shuttle, ISS, and Apollo programs. Some medical situations require large quantities of water, for example, lithium hydroxide (LiOH) or other toxic substances in the eye or skin, or in a wound. However, these events are off-nominal and occur at lower frequency than particulate events during the mission and may be considered contingencies. The quantity of water to be provided depends on the number of crew and expected contingency events and should ensure that medical treatment can be provided.]

6.3.2.7 Water Quantity for Suited EVA Operations

[V2 6035] The system **shall** provide an additional 240 ml (8 oz) of potable water per hour, above nominal potable water provision, for crewmembers performing EVA operations.

[Rationale: Potable water is necessary during suited operations to prevent dehydration related to perspiration and insensible water loss, as well as to improve comfort. The additional 240 ml (8 oz) is based upon measured respiratory and perspiratory losses during suited operations. The quantity of water to be made available within a suit is defined in section 11.2.3.2, EVA Suited Hydration [V2 11030], in this NASA Technical Standard.]

Downloaded from http://www.everyspec.com

6.3.2.8 Fluid Loading Water Quantity for Earth Entry

[V2 6036] The system **shall** provide a minimum of 1.0 kg (2.2 lb) of potable water per crewmember for re-entry fluid loading countermeasure for each end-of-mission (EOM) opportunity.

[Rationale: The 1.0 kg (2.2 lb) quantity is based on the Space Shuttle aeromedical flight rule for re-entry fluid loading, which requires 1.5 kg (3.3 lbs) initial fluid loading, 0.5 L of which comes from unconsumed daily water allocation per crewmember. This allocation protects for nominal EOM fluid loading plus one additional wave-off opportunity 24 hours later. Without this additional water allocation, the crew may have inadequate water available to fluid load and may become hemodynamically compromised during and after deorbit. Inadequate fluid loading will almost certainly cause physiological difficulties in some, if not most, crewmembers.]

6.3.2.9 Crew Recovery Water Quantity

[V2 6037] The system **shall** provide a minimum of 1.0 kg (2.2 lb) of potable water per crewmember for each 8-hour period of the entire post-landing crew recovery period.

[Rationale: Water is required during the post-landing phase, up to about 36 hours, to ensure crewmembers are properly hydrated. Less water may be needed for hydration following a launch abort, since crewmembers will not have undergone spaceflight fluid loss.]

6.3.2.10 Sampling Water Quantity

[V2 6038] The system **shall** provide sufficient quantities of potable water to support water quality sampling.

[Rationale: The quantity of water required for water sampling is to be defined and requested as above and beyond the nominal potable water quantity requirements, which is done to ensure water quality.]

6.3.3 Water Dispensing

6.3.3.1 Water Dispensing Rate

[V2 6039] Water **shall** be dispensed at a rate that is compatible with the food system.

[Rationale: A water dispensing rate is to be defined as a rate that is compatible with the food packaging and time demands of the allotted meal schedule to ensure that the crew is able to prepare for and perform tasks, e.g., filling drink bags, rehydrating food, in a reasonable amount of time. The rate will depend on the design of the food system and the amount of water required, if necessary, to rehydrate beverages and food. On ISS today, water is dispensed at 25 ml increments. All food portions are sized to be compatible with this increment (i.e., 25 ml to 250

Downloaded from http://www.everyspec.com

ml). The increment was different in previous missions, as low as 15 ml. The program will define appropriate increments in accordance with HMTA.]

6.3.3.2 Water Dispensing Increments

[V2 6040] To prevent overflow, water **shall** be dispensable in specified increments that are compatible with the food preparation instructions and time demands of the allotted meal schedule.

[Rationale: Water dispensing increments are to be defined to properly hydrate food and beverages. In addition, palatability is to be included as part of the assessment when determining the proper hydration of food and beverages. On ISS today, water is dispensed at 25 ml increments. All food portions are sized to be compatible with this increment (i.e., 25 ml to 250 ml). The increment was different in previous missions, as low as 15 ml. The program will define appropriate increments in accordance with HMTA.]

6.3.4 Water Temperature

6.3.4.1 Hot Beverage Water Temperature

[V2 6041] The system **shall** provide potable water for hot beverages with a dispensing temperature between 68.3 ºC (155 ºF) and 79.4 ºC (175 ºF).

[Rationale: Many rehydrated beverages are familiar to crewmembers as warm items and are therefore more palatable served warm. Water at 79.4 ºC (175 ºF) allows for the temperature of rehydrated beverages to remain above 68.3 ºC (155 ºF), which prevents microbial growth. The higher water temperature also allows for faster rehydration of beverages.]

6.3.4.2 Cold Beverage Water Temperature

[V2 6042] The system **shall** provide potable cold beverages at a maximum temperature of 15.6 ºC (60 ºF).

[Rationale: Over the course of long-duration missions, crews can tire of repetitive beverages and foods. Providing cold water is an important way of keeping the crew interested in their meals and providing a familiar contact to normal Earth living. Chilled water was provided during Space Shuttle flights (nominally between 7.2 and 11.7 °C (45 to 53 °F)). In addition, a chiller is available to ISS crews to cool beverages and food items. Cold water makes certain beverages and food items (such as shrimp cocktail, berry medley, strawberries, and breakfast cereals) more acceptable. This can be met by dispensing water directly from the vehicle or a chiller.]

Downloaded from http://www.everyspec.com

6.3.4.3 Food Hydration Water Temperature

[V2 6043] The system **shall** provide potable water for food hydration with a dispensing temperature between 68.3 ºC (155 ºF) and 79.4 ºC (175 ºF).

[Rationale: Many rehydrated foods are familiar to crewmembers as warm items and are therefore more palatable served warm. Water at 79.4 ºC (175 ºF) allows for the temperature of rehydrated food to remain above 68.3 ºC (155 ºF), which prevents microbial growth. The higher water temperature also allows for faster rehydration of food items.]

6.3.4.4 Personal Hygiene Water Temperature

[V2 6044] The system shall provide potable water for personal hygiene with a dispensing temperature between 29.4 ºC (85 ºF) and 46.1 ºC (115 ºF).

[Rationale: This temperature range supports comfortable body cleansing.]

6.3.4.5 Medical Water Temperature

[V2 6045] The system **shall** provide potable water for medical events with a dispensing temperature between 18 ºC (64.4 ºF) and 28 ºC (82.4 ºF).

[Rationale: The temperature range is required to prevent thermal injury to the tissues during irrigation.]

6.3.5 Water Quality Monitoring

[V2 6046] Water quality monitoring capability **shall** include pre-flight, in-flight, and post-flight sampling and analysis.

[Rationale: Rigorous ground processing with pre-flight water sampling and contamination assessment prevents in-flight water quality problems and thus minimizes the need for in-flight contamination monitoring and remediation of any water quality parameters that are out of specification. In-flight sampling capability supports real-time contaminant monitoring and remediation of stored or regenerated water systems as needed for long-duration missions. Ground-based quality analyses of in-flight and post-landing samples provide a record of crew exposures and are used to determine follow-on ground processing steps.]

6.4 Contamination

The system interior atmosphere, water, or surfaces can become contaminated from multiple in-flight sources during operations, including material offgassing, payloads, other vehicles, crew, and planetary environments. Accordingly, only those materials or substances that, if offgassed or released into the habitable volume, are not or will not form hazardous substances and would not threaten human health are to be used within the spacecraft.

Downloaded from http://www.everyspec.com

6.4.1 Toxic Chemicals

6.4.1.1 Toxic Hazard Level Three

[V2 6047] The system **shall** use only chemicals that are Toxic Hazard Level Three or below, as defined in JSC-26895, Guidelines for Assessing the Toxic Hazard of Spacecraft Chemicals and Test Materials, in the habitable volume of the spacecraft.

[Rationale: The intent of this requirement is not to limit or restrict the use of materials, e.g., paints that have the potential of outgassing Toxic Hazard Level Three compounds. Rather, the intent is that when such materials are used in the habitable volume of a system, they be controlled in accordance with JSC-20584, Spacecraft Maximum Allowable Concentrations for Airborne Contaminants. Furthermore, Toxic Hazard Level Three and below compounds could pose an immediate risk to human health; therefore, supplies for crew protection and spill containment are to be provided. This would allow for crewmembers to clean contaminated surfaces and atmospheres of Toxic Hazard Level Three and below compounds. In addition to the supplies needed to respond to a spill, the system itself needs to be capable of controlling the contamination below the spacecraft maximum allowable concentraton (SMAC) limits defined in section 6.4.2, Atmosphere Contamination Limit – Airborne Contaminants [V2 6050], of this NASA Technical Standard. However, should a Toxic Hazard Level Three compound be deemed out of control and unable to be cleaned or contained, then the substance is elevated to Toxic Hazard Level Four and treated as such.]

6.4.1.2 Toxic Hazard Level Four

[V2 6048] The system **shall** prevent Toxic Hazard Level Four chemicals, as defined in JSC-26895, from entering the habitable volume of the spacecraft.

[Rationale: Toxic Hazard Level Four compounds cannot be cleaned up by the crew and pose a risk of permanent injury or worse.]

6.4.1.3 Chemical Decomposition

[V2 6049] The system **shall** use only chemicals that, if released into the habitable volume, do not decompose into hazardous compounds that would threaten health during any phase of operations.

[Rationale: Only a few compounds have been shown to decompose into hazardous compounds during nominal Atmosphere Revitalization System operations on the Space Shuttle, but these compounds could present a toxic threat if the amount of the compound involved is sufficient and the product compound is hazardous.]

Downloaded from http://www.everyspec.com

6.4.2 Atmosphere Contamination Limit – Airborne Contaminants

[V2 6050] The system **shall** limit airborne contaminants to concentrations specified in JSC-20584, Spacecraft Maximum Allowable Concentrations for Airborne Contaminants.

[Rationale: Exposure limits for expected airborne spacecraft contaminants are established to protect crewmembers from illness and injury. The SMACs provide guidance for short-term (1 and 24 hours), medium-term (7 and 30 days), and long-term (180 days) exposure of these constituents. The SMACs take into account several unique factors of human spaceflight missions, including the stress on human physiology, the uniform good health of astronauts, and the absence of pregnant or very young individuals. Short-term SMACs are intended for off-nominal events and should not be used for system design or evaluation of routine exposures.]

6.4.3 Water Contamination Control

[V2 6051] The system **shall** prevent potable and hygiene water supply contamination from microbial, atmospheric (including dust), chemical, and non-potable water sources to ensure that potable and hygiene water are provided.

[Rationale: While ensuring the delivery of potable water to crewmembers on orbit is important, contamination from sources within the delivery system or from the environment is also possible.]

6.4.4 Particulate Contamination Control

Note: For contamination, units of measure are expressed in metric units only in the sections that follow.

6.4.4.1 Particulate Matter

[V2 6052] The system **shall** limit the cabin particulate matter concentration for total dust to <3 mg/m^3, and the respirable fraction of the total dust to <2.5 µm in aerodynamic diameter to <1 mg/m^3.

[Rationale: These values were derived by applying a factor of 5 to the OSHA limits for nuisance dusts, which is the best analog for the ordinary dust present in spacecraft. They do not apply to reactive dust, e.g., LiOH or extraterrestrial dust. The factor of 5 is applied to adjust from intermittent occupational exposure to continuous spaceflight exposure.]

6.4.4.2 Lunar Dust Contamination

[V2 6053] The system **shall** limit the levels of lunar dust particles less than 10 µm in size in the habitable atmosphere below a time-weighted average of 0.3 mg/m^3 during intermittent daily exposure periods that may persist up to 6 months in duration.

Downloaded from http://www.everyspec.com

[Rationale: This limit was based on detailed peer-reviewed studies completed by the Lunar Atmosphere Dust Toxicity Assessment Group (LADTAG) and is specific to the conditions relevant to the lunar surface, i.e., this requirement would not necessarily be applicable to other missions. The requirement assumes that the exposure period is episodic and is limited to the time before ECLSS can remove the particles from the internal atmosphere (assumed as 8 hours post-introduction). Although the requirement is being conservatively applied to all inhalable particles (all particles ≤10 μm), it is most applicable to dusts in the respirable range (≤2.5 μm) that can deposit more deeply into the lungs. Studies show that the particle size of lunar dust generally falls within a range of 0.02-5 μm.]

6.4.5 Microbial Contamination Prevention

6.4.5.1 Fungal Contamination

[V2 6054] The system **shall** limit the levels of fungal contaminants in the internal atmosphere below 100 CFU/m^3 during nominal systems operations.

[Rationale: Fungal limits are necessary to prevent infection and are consistent with those defined in SSP 50260, International Space Station Medical Operations Requirements Document (MORD).]

6.4.5.2 Bacterial Contamination

[V2 6055] The system **shall** limit the levels of bacterial contaminants in the internal atmosphere below 1000 CFU/m^3 during nominal systems operations.

[Rationale: Bacterial limits are necessary to prevent infection and are consistent with those defined in SSP 50260.]

6.4.5.3 Surface Cleanability

[V2 6056] System interior surfaces **shall** be compatible for cleaning of microbial contamination to a level of 10,000 CFU per 100 cm^2 or fewer bacteria and to a level of 100 CFU per 100 cm^2 or fewer fungi.

[Rationale: These limits are intended to ensure that bacterial and fungal contamination on spacecraft internal surfaces can be removed to mitigate the risk of such contamination to the crew. These limits have been documented in SSP 50260. Internal surfaces can become dirtied during normal day-to-day use. This requirement ensures that the dirtied surface is capable of being cleaned, thus precluding an unsafe or unhealthy condition.]

Downloaded from http://www.everyspec.com

6.4.5.4 Surface Microbial Contamination during Nominal Systems Operations

[V2 6057] The system **shall** limit the levels of microbial contaminants on the internal surfaces to 10,000 CFU per 100 cm^2 or fewer bacteria and to 100 CFU per 100 cm^2 or fewer fungi with no medically significant microorganisms present during nominal system operations.

[Rationale: Microbial limits are necessary to prevent infection and are consistent with those defined in SSP 50260. Medically significant microorganisms are based on assessment of the recovered microorganisms by the JSC Biosafety Review Board.]

6.4.5.5 Condensation Limitation

[V2 6058] The system **shall** prevent condensation persistence on surfaces within the internal volume.

[Rationale: The presence of free water in the internal volume can promote the growth of microbial organisms, which poses a hazard to human health. The system is to provide controls and mitigation steps to prevent the formation of condensate on internal surfaces for a length of time, thus preventing microbial growth to unacceptable levels. Initial microbial concentration, the probable types of organisms, the porosity of the surface materials, and exposure can affect the acceptable persistence of the condensate based upon crew health risk mitigation. For example, current ISS requirements provide some flexibility in allowable condensate persistence for areas determined to have minimal crew health risk.]

6.4.5.6 Microbial Air Contamination Prevention

[V2 6059] The system **shall** limit the levels of microbial contaminants by maintaining a continuous flow of air that has been cleaned to have at least 99.97% of airborne particles 0.3 µm in diameter, or larger, removed.

[Rationale: Microbial limits for breathing air are designed to prevent infection and allergic response. The specific air flow rates are dependent on the vehicle design and expected operations. To provide clean air, ISS air systems have relied on High Efficiency Particulate Air (HEPA) filter design, which has performed exceptionally well in controlling atmospheric microbial concentrations.]

6.4.5.7 Biological Payloads

[V2 6060] Biological payloads **shall** meet the criteria defined by the JSC Biosafety Review Board guidelines contained in JPR-1800.5, Biosafety Review Board Operations and Requirements Document.

[Rationale: Biohazardous agents, which include bacteria, fungi, protozoa, viruses, cell cultures, and recombinant deoxyribonucleic acid (DNA), may be infectious and result in disease or contamination of water and food supplies or the internal environment. Payloads that contain

Downloaded from http://www.everyspec.com

biohazardous materials are to ensure that these materials are properly contained, handled, and discarded. JPR-1800.5 establishes requirements for the identification and assessment of biohazardous materials used in payload or ground-based experiments.]

6.4.6 Cross-Contamination

[V2 6061] The system **shall** control cross-contamination among crew, payloads, e.g., animals and plants, surface vehicles, and planetary environments to acceptable levels in accordance with JPR-1800.5.

[Rationale: Contamination from payloads and planetary environments to crewmembers can negatively affect crew health; contamination from crewmembers and planetary environments to payloads can affect scientific data; contamination from crewmembers and payloads to planetary environments may impact the health of the planetary environment, including possible microscopic life forms on the surface.]

6.4.7 Availability of Environmental Hazards Information

[V2 6062] The system **shall** provide toxicological and environmental hazard information in formats accessible by the crew throughout the mission.

[Rationale: In case of accidental contact with hazardous materials during a mission, crew access to hazard information, e.g., Safety Data Sheets (SDSs), is necessary to determine methods of cleanup and exposure treatment.]

6.4.8 Contamination Cleanup

[V2 6063] The system **shall** provide a means to remove or isolate released contaminants and to return the environment to a safe condition.

[Rationale: In the event of a contamination event, contaminants are to be removed, isolated, or reduced from the environment to ensure the crew's health and ability to continue the mission. In some cases such as a spill, vehicle systems may be unable to remove the contaminant; and the crewmembers will have to perform the cleanup themselves. Cleanup of a contamination includes the control and disposition of the contamination.]

6.5 Acceleration

Exceeding acceleration limits can significantly impair human performance and cause injury, thereby threatening mission success and crew survival.

Downloaded from http://www.everyspec.com

6.5.1 Sustained Translational Acceleration Limits

[V2 6064] The system **shall** limit the magnitude, direction, and duration of crew exposure to sustained (>0.5 seconds) translational acceleration by staying below the limits in Figure 3, $+G_x$ Sustained Translational Acceleration Limits; Figure 4, $-G_x$ Sustained Translational Acceleration Limits; Figure 5, Ascent and Ascent Aborts $\pm G_z$ Sustained Translational Acceleration Limits; Figure 6, Return to Earth $\pm G_z$ Sustained Translational Acceleration Limits; and Figure 7, $\pm G_y$ Sustained Translational Acceleration Limits.

[Rationale: The limits in these figures represent safe levels of sustained translational acceleration under nominal and off-nominal conditions. Exposure to acceleration above these limits could significantly affect human performance for maneuvering and interacting with a spacecraft. The limits for return to Earth are lower than launch limits because crewmembers could have degraded capabilities because of deconditioning from exposure to reduced gravity. For the extreme conditions of a launch abort or emergency entry, limits are higher because it may be necessary to expose the crew to accelerations more severe than those experienced nominally. Humans are never to be exposed to translational acceleration rates greater than these elevated limits, as this significantly increases the risk of incapacitation, thereby threatening crew survival. In using Figures 3 through 7, the acceleration vectors are relative to the "axis" of the upper body, particularly with a focus on a line running from the eye to the heart. However, the acceleration limit charts do not account for all body types or temporary off-axis accelerations or body positions. This is why the limits are set conservatively. Therefore, brief excursions past the limits in one axis should be reviewed and may be found to be acceptable.]

Downloaded from http://www.everyspec.com

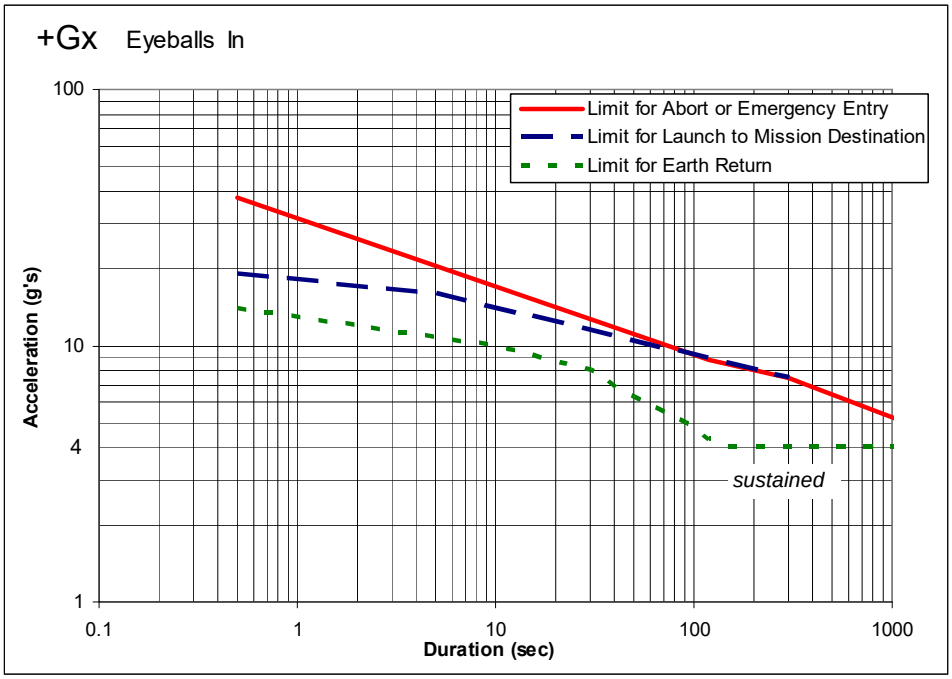

Data for Curves

Return	Duration (sec)	0.5	10	30	50	90	120	150	10000
	Acceleration (g)	14	10	8	6.3	5	4.3	4	4
Launch	Duration (sec)	0.5	5	300					
	Acceleration (g)	19	16	7.5					
Emergency	Duration (sec)	0.5	120	300	1200				
	Acceleration (g)	38	8.8	7.5	5				

Figure 3—+G_x Sustained Translational Acceleration Limits

Downloaded from http://www.everyspec.com

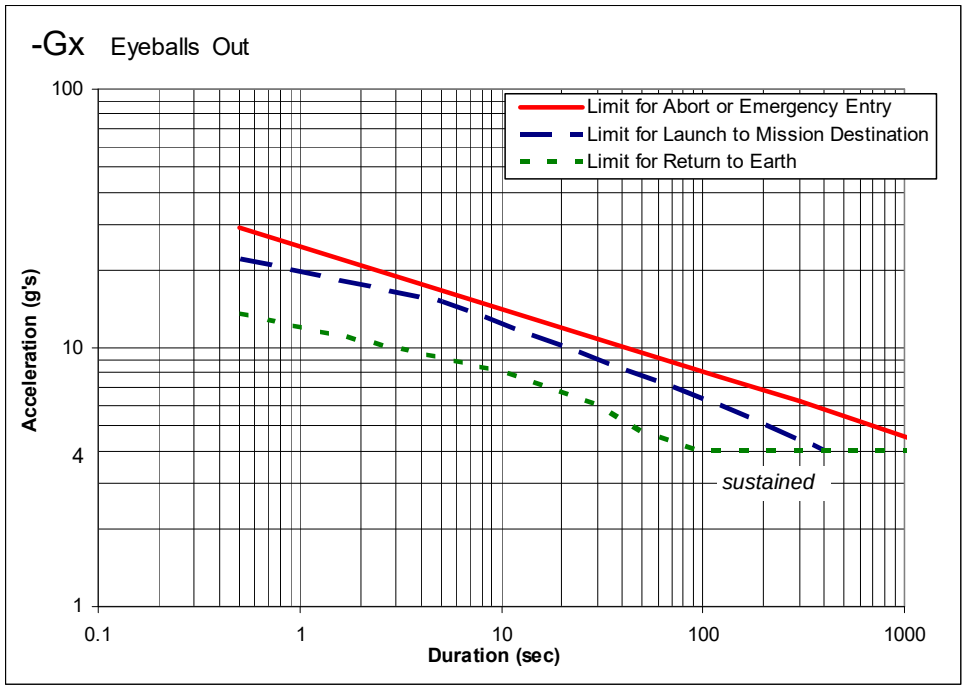

Data for Curves

Return	Duration (sec)	0.5	10	30	50	90	100	100	10000
	Acceleration (g)	13.5	8	6	4.7	4.05	4	4	4
Launch	Duration (sec)	0.5	5	120	400				
	Acceleration (g)	22	15	6	4				
Emergency	Duration (sec)	0.5	120	300	1200				
	Acceleration (g)	29	7.7	6.2	4.3				

Figure 4— -G_x Sustained Translational Acceleration Limits

Downloaded from http://www.everyspec.com

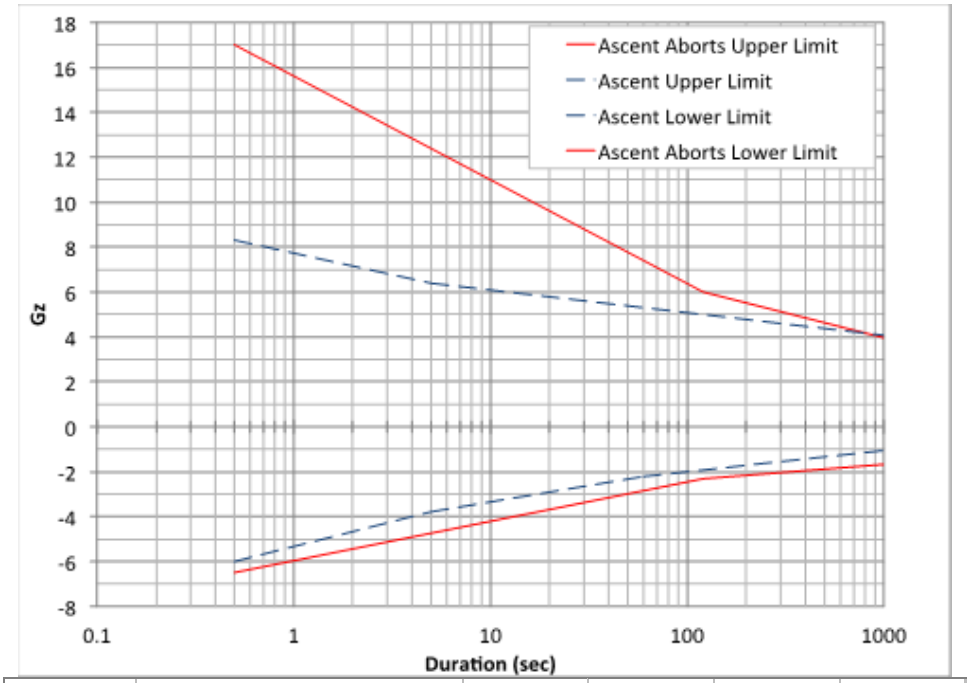

Ascent	**Duration (sec)**	**0.5**	**5**	**1200**	
	Upper Limit	**8.3**	**6.4**	**4**	
	Duration (sec)	**0.5**	**5**	**60**	**1200**
	Lower Limit	**-6**	**-3.8**	**-2.2**	**-1**
Ascent Aborts	**Duration (sec)**	**0.5**	**120**	**1200**	
	Upper Limit	**17**	**6**	**3.8**	
	Lower Limit	**-6.5**	**-2.3**	**-1.6**	

Figure 5—Ascent and Ascent Aborts $\pm G_z$ Sustained Translational Acceleration Limits

Downloaded from http://www.everyspec.com

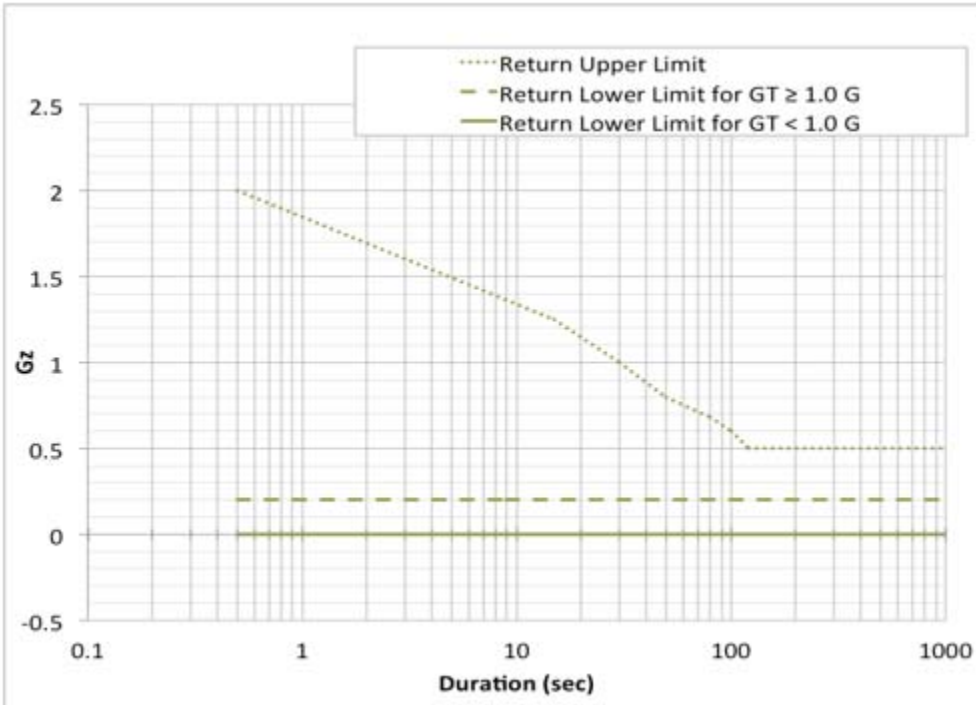

Return	Duration (sec)	0.5	15	30	50	80	100	120	1000
	Upper Limit	2	1.25	1	0.8	0.68	0.6	0.5	0.5
	Lower Limit for $G_T < 1$ G	0	0	0	0	0	0	0	0
	Duration (sec)	0.5	1000						
	Lower Limit for $G_T \geq 1.0$ G	0.2	0.2						

Return limit for sustained (> 0.5 sec) $\pm G_z$ acceleration is:

- $+0.0\ G < G_z \leq +0.5\ G$ from Entry Interface until total Linear Reaction G_T exceeds 1.0 G.
- $+0.2\ G \leq G_z \leq +0.5\ G$ when $G_T \geq 1.0$ G.

where

$$G_T = \sqrt{G_X^2 + G_Y^2 + G_Z^2}$$

Figure 6—Return to Earth $\pm G_z$ Sustained Translational Acceleration Limits

Downloaded from http://www.everyspec.com

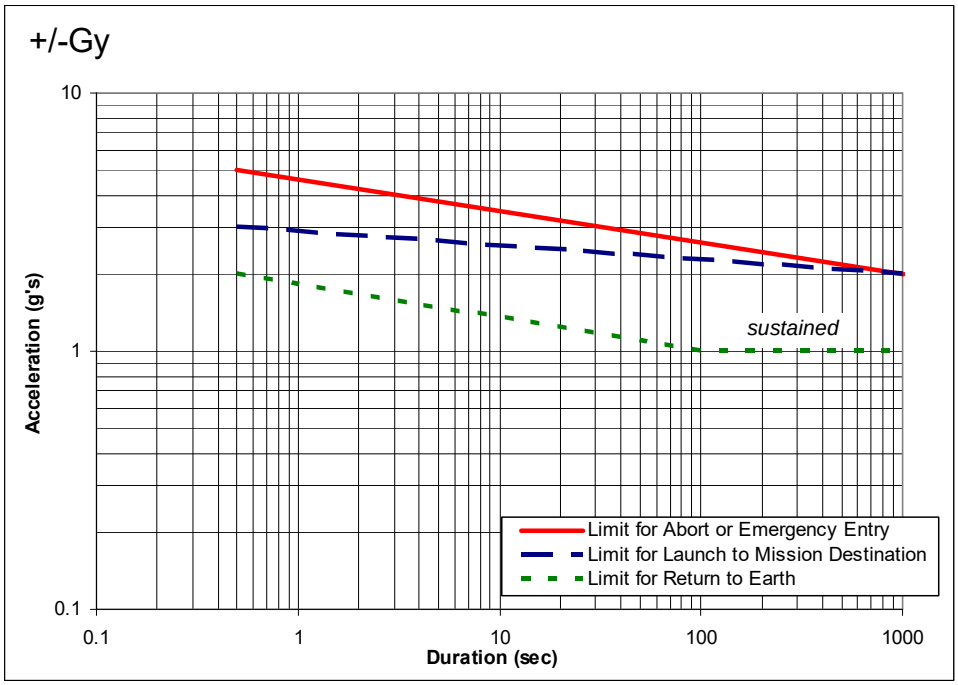

Data for Curves

Return	Duration (sec)	0.5	100	10000
	Acceleration (g)	2	1	1
Launch	Duration (sec)	0.5	1000	1000
	Acceleration (g)	3	2	2
Emergency	Duration (sec)	0.5	1000	1000
	Acceleration (g)	5	2	2

Figure 7—±G_y Sustained Translational Acceleration Limits

6.5.2 Rotation Limits

6.5.2.1 Rotational Velocity

[V2 6065] The system **shall** limit crew exposure to rotational velocities in yaw, pitch, and roll by staying below the limits specified in Figure 8, Rotational Velocity Limits.

[Rationale: The limits in this figure represent safe levels of sustained rotational acceleration for crewmembers under nominal and off-nominal conditions. Exposure to rotational acceleration above these limits could significantly affect human performance for maneuvering and interacting with a spacecraft. The limits for return to Earth are lower than launch limits because crewmembers could have degraded capabilities because of deconditioning from exposure to reduced gravity. For the extreme conditions of a launch abort or emergency entry, limits are higher because it may be necessary to expose the crew to accelerations more severe than those experienced nominally. Humans are never to be exposed to rotational acceleration rates greater than these elevated limits as this significantly increases the risk of incapacitation, thereby threatening crew survival.]

Downloaded from http://www.everyspec.com

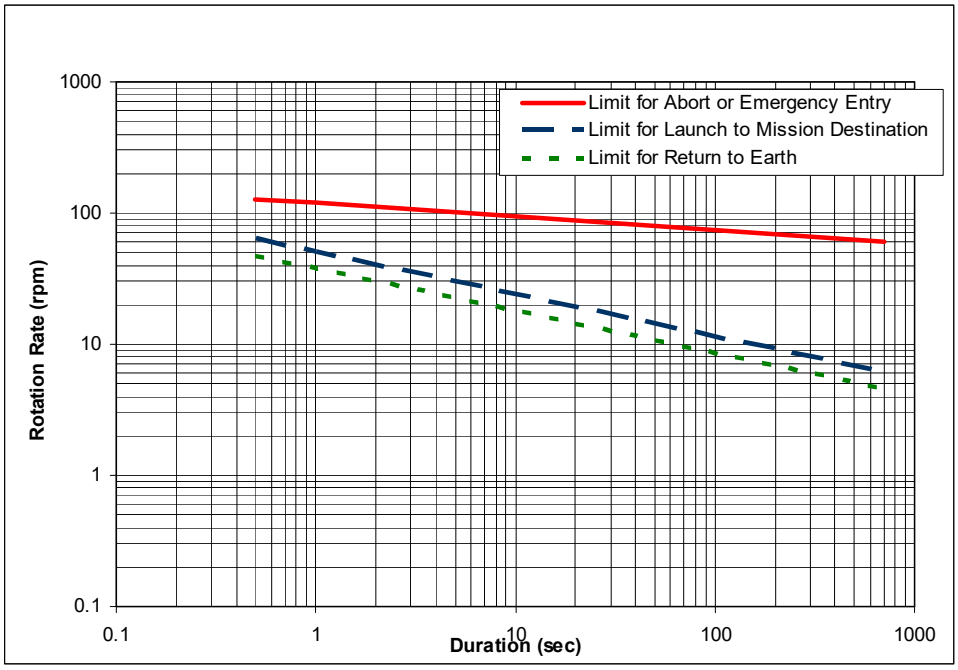

Data for Curves

Return	Duration (sec)	0.5	1	700
	Rotation Rate (rpm)	47	37.5	4.5
Launch	Duration (sec)	0.5	1	700
	Rotation Rate (rpm)	63	50	6
Emergency	Duration (sec)	0.5	1	700
	Rotation Rate (rpm)	129	120	60

Figure 8—Rotational Velocity Limits

6.5.2.2 Sustained Rotational Acceleration Due to Cross-Coupled Rotation

[V2 6066] The system **shall** prevent the crew exposure to sustained (>0.5 second) rotational accelerations caused by cross-coupled rotations greater than 2 rad/s^2.

[Rationale: Crewmembers are not expected to be able to tolerate sustained cross-coupled rotational accelerations (simultaneous rotations about two different axes) in excess of 2 rad/s^2 without significant discomfort and disorientation. Sustained cross-coupled rotational accelerations exceeding this amount have been found to significantly impact human performance and autonomic function (e.g., nausea, dizziness, and disorientation; degradations in neurovestibular and sensorimotor performance, physical reach, and cognition), potentially for an extended period of time after exposure. Note that rotational acceleration due to cross-coupled rotation can be computed for rotational velocity components represented in any vehicle- or head-referenced coordinate frame. Ideally, rotational velocities should be decomposed into their orthogonal principal components before computing the acceleration due to cross-product terms.

Downloaded from http://www.everyspec.com

For scientific references regarding this subject, see chapter 6, Natural and Induced Environments, of the HIDH.]

6.5.2.3 Transient Rotational Acceleration

[V2 6067] The system **shall** limit transient (≤0.5 seconds) rotational accelerations in yaw, pitch, or roll to which the crew is exposed and the limit used appropriately scaled for each crewmember size from the 50th percentile male limits of 2,200 rad/s^2 for nominal and 3,800 rad/s^2 for off-nominal cases.

[Rationale: Crewmembers are not expected to be able to tolerate sustained rotational accelerations in excess of 2,200 rad/s^2 for nominal and 3,800 rad/s^2 for off nominal cases. This could occur as a result of an impact, whereby brief, high-magnitude rotational accelerations are imparted to the crew. These values relate to a risk of 5% or 19% risk of brain injury, respectively, for a 50th percentile male. These values should be appropriately scaled to other crewmember sizes as needed. For additional information scaling these limts, see Petitjean, A., et al. (2015). Normalization and Scaling for Human Response Corridors and Development of Injury Risk Curves. Accidental Injury: Biomechanics and Prevention. N. Yoganadan, A. Nahum and J. Melvin. New York, Springer Science+Business Media: 769-792].

6.5.3 Transient Linear Acceleration Change Rate Limits

6.5.3.1 Acceleration Rate of Change

[V2 6068] The system **shall** limit crew exposure to acceleration rates of change no larger than 500 g/s during any sustained (>0.5 second) acceleration event.

[Rationale: Acceleration onset rates greater than 500 g/s significantly increase the risk of incapacitation, thereby threatening crew survival.]

6.5.3.2 Acceleration Injury Prevention

[V2 6069] The system **shall** mitigate the risk of injury to crewmembers caused by accelerations during dynamic mission phases per Table 4, Acceptable Injury Risk Due to Dynamic Loads.

[Rationale: During dynamic flight phases, there is potential for impact and flail injury, which includes crewmember extremities impacting vehicular surfaces or objects, hyperextending, hyperflexing, hyper-rotating, fracturing, or dislocating if proper restraints and supports are not used. Features such as harnesses, form-fitting seats, and tethers may help maintain the proper position of the crewmember's body and limbs to reduce movement or contact with vehicle surfaces that would produce injury. In addition, the design of spacesuits may contribute to reducing injury to the crew. Preventing the inadvertent contact of extremities with vehicular structure or interior components significantly reduces the likelihood of limb fracture or soft tissue injury during a dynamic flight event. Extremity guards, tethers, garters, and hand holds have been used to reduce injury in other spacecraft, aircraft, and automotive vehicles. Injury

Downloaded from http://www.everyspec.com

classifications are based on the Operationally Relevant Injury Scale defined in NASA/TP-2015-218578, Final NASA Panel Recommendations for Definition of Acceptable Risk of Injury due to Spaceflight Dynamic Events. Occurrence of dynamic cases identified in Table 4 are based on statistical modeling of possible dynamic events. See NASA/TP-2015-218578 for more information.]

Table 4—Acceptable Injury Risk Due to Dynamic Loads

Injury Severity (Class)*	≥95% of dynamic cases	<5% of dynamic cases
Minor (I)	<4%	<23%
Moderate (II)	<1%	<4%
Severe (III)	<0.1%	<0.7% [<1%][T]
Life-Threatening/Fatal (IV)	<0.1%	<0.7%

*Injury classes are defined in NASA/TP-2015-218578.

[T]Acceptance of higher occurrence in brackets assumes Search and Rescue forces are able to access crewmembers within 30 minutes of mishap occurrence.

6.5.3.3 Injury Risk Criterion

[V2 6070] The system **shall** limit the injury risk criterion (β) to no greater than 1.0 per the Brinkley Dynamic Response model (NASA/TM-2013-217380, Revision 1, Application of the Brinkley Dynamic Response Criterion to Spacecraft Transient Dynamic Events).

[Rationale: The Brinkley Dynamic Response model will provide an injury risk assessment during dynamic phases of flight for accelerations <0.5 seconds. Application of this model assumes that the crew will be similarly restrained during all events where the Brinkley model is applied. Human tolerance for injury risk limits for development of space vehicles that are based on human volunteer impact test data and operational emergency escape system experience such as the Brinkley criterion have been adjusted for landing impact after re-entry considering existing knowledge of the physical and physiological deconditioning related to long-term exposure to the microgravity of space. The vast experience in human testing of aircraft ejection seats and operational experience with emergency escape systems have enabled the highest fidelity for injury prediction, using the Brinkley model in the G_z axis. Although the maximum allowable Brinkley β value is 1.0 for any given level of risk, the vehicle occupant protection system design is to strive to achieve β values as low as reasonably achievable for as many of the landing conditions and scenarios as possible. The criteria include dynamic response limits that have been established for varying probabilities of injury. This model may be used primarily for landing scenarios, but it is applicable for all dynamic phases of flight for accelerations less than 0.5 seconds. Application of the Brinkley Dynamic Response model is described in NASA/TM-2013-217380, Application of the Brinkley Dynamic Response Criterion to Spacecraft Transient Dynamic Events. Structural failure may present an occupant protection hazard through impinging upon occupant volume in such a way as to injure crewmembers.]

Downloaded from http://www.everyspec.com

6.6 Acoustics

This section establishes requirements to ensure an acceptable acoustic environment to preclude noise-related hearing loss and interference with communications and to support human performance. For specifications on using sound to relay information, see section 10.3.4, Audio Displays, in this NASA Technical Standard. Table 5, Acoustic Limits for Launch, Entry, and Abort Phases, and Table 6, Acoustic Limits for On-Orbit Phase, are summaries of the acoustic requirements listed in the following sections, referenced by requirement number.*

To ensure that an integrated vehicle (including suit systems) meets the acoustic limits, it is necessary to develop an Acoustic Noise Control Plan that establishes the overall noise control strategy, acoustic limit allocations, acoustic testing, analyses, remedial action steps, schedule, and follow-up activities. This plan needs to be initially released early in the design cycle and then updated as new data and design information become available. The included acoustic limit allocations would define a set of allocated and sub-allocated acoustic limits for systems, sub-systems, and hardware components so that the total contributions of all hardware will result in compliance with this NASA Technical Standard. As part of the Acoustic Noise Control Plan, it is best practice to verify acoustic requirements with test of the actual flight hardware. Modeling the acoustic environment of a complex vehicle with several noise sources and propagation paths is difficult and can be prone to errors. In addition, small design changes or even different part numbers of the same design such as with fans can change the acoustic level. Previous spaceflight experience has shown that without such a plan, it is difficult to develop an integrated system that can meet acoustic limits.]

Downloaded from http://www.everyspec.com

Table 5—Acoustic Limits for Launch, Entry, and Abort Phases

Mission Phase	24-Hour Exposure	Ceiling	Impulse Noise	Infrasonic Noise 1-20 Hz	Referenced Requirements
Launch	Noise dose ≤100, equivalent to 8-hour 85 dBA TWA	≤105 dBA allows 10 dBA headroom for Personal Comm	≤140 dB peak SPL	<150 dB*	V2 6073; V2 6074; V2 6076; V2 6085
Entry	Noise dose ≤100, equivalent to 8-hour 85 dBA TWA	≤105 dBA allows 10 dBA headroom for Personal Comm	≤140 dB peak SPL	<150 dB*	V2 6073; V2 6074; V2 6076; V2 6085
Launch Abort	Noise dose ≤100, equivalent to 8-hour 85 dBA TWA	≤115 dBA	≤140 dB peak SPL	< 150 dB*	V2 6073; V2 6075; V2 6076; V2 6085
Personal Communication	Noise dose ≤100, equivalent to 8-hour 85 dBA TWA	≤115 dBA	≤140 dB peak SPL	Not Applicable	V2 6073; V2 6076; V2 6106

*Hearing protection CANNOT be used to satisfy this limit.

Downloaded from http://www.everyspec.com

Table 6—Acoustic Limits for On-Orbit Phase*

Mission Phase	Continuous Noise	Hazardous Noise	Intermittent Noise	Impulse Noise	Referenced Requirements
On-Orbit	NC-50 Octave Band SPL limits. See Figure 9 and Table 7	<85 dBA	Specified Sound Level (dBA) depending on duration, see Table 5	≤140 dB peak SPL	V2 6077; V2 6078; V2 6080; V2 6083
a. For Sleep on Missions > 30 days	NC-40 Octave Band SPL limits. See Figure 9 and Table 7	<85 dBA	+10 dBA or less above background	+10 dB peak or less above background	V2 6077; V2 6079; V2 6082
b. For Sleep on Missions ≤ 30 days	NC-50 Octave Band SPL limits. See Figure 9 and Table 7	<85 dBA	+10 dBA or less above background	+10 dB peak or less above background	V2 6077; V2 6078; V2 6079; V2 6082

*Hearing protection CANNOT be used to satisfy these limits.

6.6.1 Acoustic Limits

6.6.1.1 Launch, Entry, and Abort Noise Exposure Limits

[V2 6073] During launch, entry, and abort operations, the noise exposure level (not including impulse noise) at the crewmember's ear, calculated over any 24-hour period, **shall** be limited such that the noise dose (D) is ≤100:

$$D = 100\sum_{n=1}^{N}\frac{C_n}{T_n}, \qquad \text{(Eq.1)}$$

where:
N = the number of noise exposure events during the 24-hour period
C_n = the actual duration of the exposure event in minutes
T_n = the maximum noise exposure duration allowed, based on the specific sound level (L_n) of an exposure event in dBA, calculated using the following equation:

$$T_n = \frac{480}{2^{(L_n-85)/3}} \qquad \text{(Eq. 2)}$$

[Rationale: A noise dose of D = 100 is equivalent to an 8-hour, 85-dBA time-weighted average (TWA) using a 3-dB exchange rate. Equivalent noise exposure levels above 85 dBA for more than 8 hours have been shown to increase the risk of noise-induced hearing loss. The above formulae can be used to calculate the 24-hour noise exposure levels based on the 8-hour, 85-dBA criterion recommended by National Institute for Occupational Safety and Health (NIOSH),

Downloaded from http://www.everyspec.com

using the 3-dB trading rule. The noise attenuation effectiveness of hearing protection or communications headsets may be used to satisfy this requirement. Any planned use of hearing protection to satisfy this requirement is to be well documented and approved. Requirements established to meet this requirement are to be included in the Acoustic Noise Control Plan. The Acoustic Noise Control Plan allocates noise levels to individual components and is maintained to ensure that the total system meets the levels defined in this NASA Technical Standard.]

6.6.1.2 Ceiling Limit for Launch and Entry

[V2 6074] During launch and entry operations, the system **shall** limit the combined A-weighted sound levels (not including impulse noise) at the crewmembers' ears to a maximum of 105 dBA; the noise attenuation effectiveness of hearing protection or communications headsets may be used to satisfy this requirement.

[Rationale: Noise levels above 115 dBA have been shown to produce noise-induced hearing loss. In cases where audio communications are required, e.g., launch, entry, a 105-dBA limit is recommended to allow 10 dB of headroom for alarms and voice communications. Any planned use of hearing protection to satisfy this requirement is to be well documented and approved. Requirements established to meet section 6.6.1.2, Ceiling Limit for Launch and Entry [V2 6074], in this NASA Technical Standard are to be included in the Acoustic Noise Control Plan.]

6.6.1.3 Ceiling Limit for Launch Abort

[V2 6075] During launch abort operations, the system **shall** limit the combined A-weighted sound levels (not including impulse noise) at the crewmembers' ears to a maximum of 115 dBA; the noise attenuation effectiveness of hearing protection or communications headsets may be used to satisfy this requirement.

[Rationale: Noise levels above 115 dBA have been shown to produce noise-induced hearing loss. In cases where no audio communications are required, e.g., during abort operations, there is no need to allow 10 dB of headroom for alarms and voice communications. Any planned use of hearing protection to satisfy this requirement is to be well documented and approved.]

6.6.1.4 Launch, Entry, and Abort Impulse Noise Limits

[V2 6076] During launch, entry, and abort operations, impulse noise measured at the crewmember's ear location **shall** be limited to less than 140-dB peak SPL; the noise attenuation effectiveness of hearing protection or communications headsets may be used to satisfy this requirement.

[Rationale: A limit of 140-dB peak SPL for impulse noise prevents trauma to the hearing organs caused by impulse noise (MIL-STD-1474, current version, Department of Defense Design Criteria Standard, Noise Limits). Any planned use of hearing protection to satisfy this requirement is to be well documented and approved. Requirements established to meet section

Downloaded from http://www.everyspec.com

6.6.2.4, Launch, Entry, and Abort Impulse Noise Limits [V2 6076], in this NASA Technical Standard are to be included in the Acoustic Noise Control Plan.]

6.6.1.5 Hazardous Noise Limits for All Phases Except Launch, Entry, and Abort

[V2 6077] For off-nominal operations, broadcast communications, depressurization valves, and maintenance activities, the A-weighted sound level (excluding impulse noise and alarm signals) **shall** be less than 85 dBA, regardless of time duration; except in the case of depressurization valves, the noise attenuation effectiveness of hearing protection or communications headsets may not be used to satisfy this requirement.

[Rationale: The 85-dBA overall SPL defines the hazardous noise limit during all phases except launch, entry, and abort, at which action to reduce the noise level is to be taken so that interference with voice communications and alarms, as well as increased risk for hearing loss, does not occur. This is to help ensure that the habitable environment is safe. This is not intended for nominal hardware emissions but to limit the sound level of sources such as communications systems, depressurization valves, and levels that occur during planned off-nominal operations and maintenance activities. Nominal on-orbit acoustic levels are limited by the Continuous and Intermittent Noise requirements (sections 6.6.1.6 and 6.6.1.8 of this NASA Technical Standard).]

6.6.1.6 Continuous Noise Limits

[V2 6078] In spacecraft work areas, where good voice communications and habitability are required, SPLs of continuous noise (not including impulse noise) **shall** be limited to the values given by the Noise Criterion (NC)-50 curve in Figure 9, NC Curves, and Table 7, Octave Band SPL Limits for Continuous Noise, dB re 20 μPa; the noise attenuation effectiveness of hearing protection or communications headsets may not be used to satisfy this requirement.

[Rationale: NC-50 limits noise levels within the crew-habitable volume to allow adequate voice communications and habitability during mission operations. The noise limit at 16 kHz does not appear in Figure 9 but is given in Table 7. SPLs for continuous noise do not apply to alarms, communications, or noise experienced during maintenance activities. The corresponding spacesuit requirement is defined in section 11.1.2.3, Continuous Noise in Spacesuits [V2 11009] in this NASA Technical Standard.]

Downloaded from http://www.everyspec.com

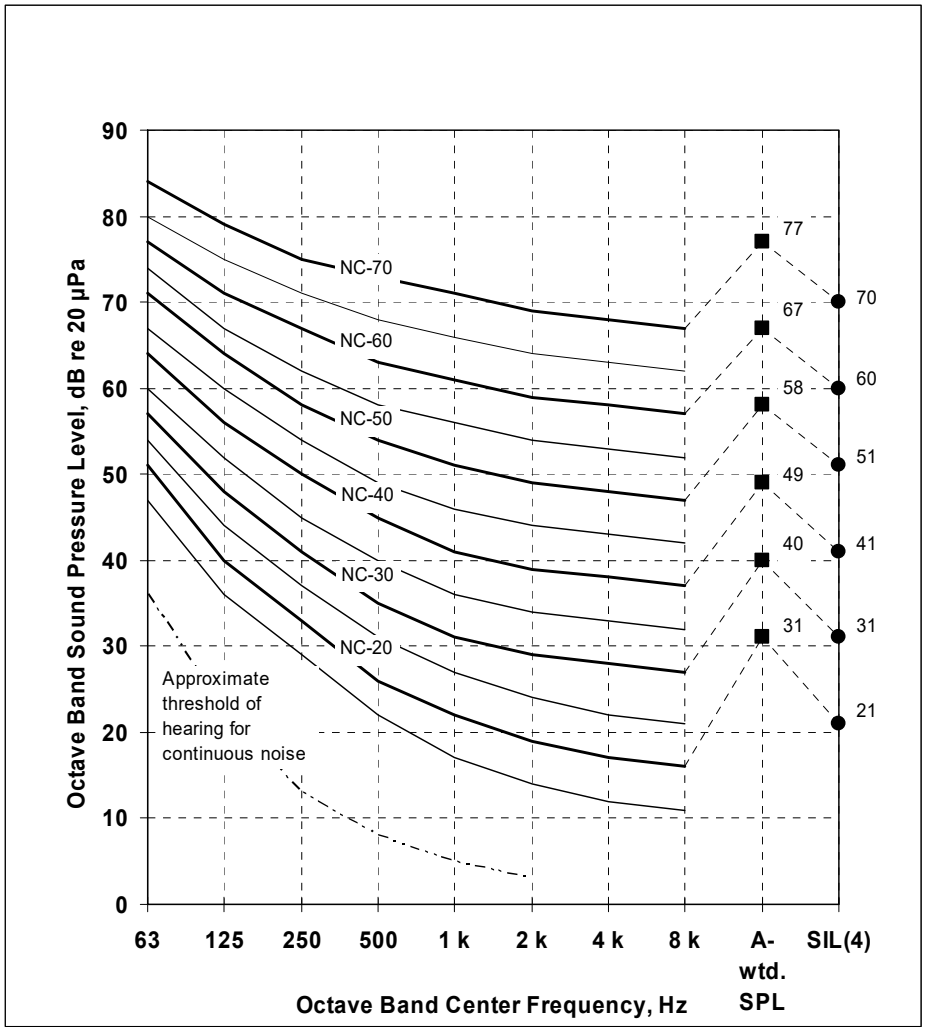

Figure 9—NC Curves

Note: Corresponding A-weighted SPLs and speech interference levels (SILs) are given for reference only (Beranek and Ver. 1992). SIL (4) is Speech Interference Level, 4-band method.

Table 7—Octave Band SPL Limits for Continuous Noise, dB re 20 µPa

	Octave Band Center Frequency (Hz)									
	63	125	250	500	1 k	2 k	4 k	8 k	16 k	NC
Work Areas Maximum (NC-50)	71	64	58	54	51	49	48	47	46	50
Sleep Areas Maximum (NC-40)	64	56	50	45	41	39	38	37	36	40

Downloaded from http://www.everyspec.com

6.6.1.7 Crew Sleep Continuous Noise Limits

[V2 6079] For missions greater than 30 days, SPLs of continuous noise **shall** be limited to the values given by the NC-40 curve (see Figure 9 and Table 7) in crew quarters and sleep areas, for which the noise attenuation effectiveness of hearing protection is not used to satisfy this requirement.

[Rationale: For a crewmember to relax the auditory system, a quiet environment is to be provided during crew sleep; the NC-40 limit provides adequate auditory rest. The noise limit at 16 kHz does not appear in Figure 9 but is given in Table 7. For missions 30 days or less in duration (short-duration missions), acoustic levels during sleep are limited by the [V2 6078] Continuous Noise Limits requirement (NC-50). Intermittent and impulse noise during sleep are controlled by the [V26082] Annoyance Noise Limits for Crew Sleep standard.]

6.6.1.8 Intermittent Noise Limits

[V2 6080] For hardware items that operate for 8 hours or less (generating intermittent noise), the maximum noise emissions (not including impulse noise), measured 0.6 m from the loudest hardware surface, **shall** be determined according to Table 8, Intermittent Noise A-Weighted SPL and Corresponding Operational Duration Limits for any 24-hour Period (measured at 0.6-m distance from the source), for which the noise attenuation effectiveness of hearing protection or communications headsets is not used to satisfy this requirement.

[Rationale: Table 8 limits crew exposure to intermittent noise levels of hardware items that are inherently noisy but that operate for short time periods. Intermittent sources can result in unacceptable noise levels, add to the overall crew noise exposure, impede communications, and cause disruption in crew rest/sleep.]

Table 8—Intermittent Noise A-Weighted SPL and Corresponding Operational Duration Limits for any 24-Hour Period (measured at 0.6-m distance from the source)

Maximum Noise Duration per 24-hr Period	Sound Pressure Level (dBA re 20 µPa)
8 hr	≤49
7 hr	≤50
6 hr	≤51
5 hr	≤52
4.5 hr	≤53
4 hr	≤54
3.5 hr	≤55
3 hr	≤57
2.5 hr	≤58
2 hr	≤60
1.5 hr	≤62
1 hr	≤65
30 min	≤69

Downloaded from http://www.everyspec.com

Maximum Noise Duration per 24-hr Period	Sound Pressure Level (dBA re 20 µPa)
15 min	≤72
5 min	≤76
2 min	≤78
1 min	≤79
Not allowed *	≥80

* To leave a margin from the 85-dBA nominal hazardous noise limit

6.6.1.9 Alarm Maximum Sound Level Limit

[V2 6081] The maximum alarm signal A-weighted sound level **shall** not exceed 95 dBA at the operating position of the intended receiver.

[Rationale: This allows alarm sound levels to exceed the 85-dBA hazard limit because of the need for alarm audibility. Also, alarms can be silenced at the crew's discretion.]

6.6.1.10 Annoyance Noise Limits for Crew Sleep

[V2 6082] With the exception of communications and alarms, the system **shall** limit impulse and intermittent noise levels at the crewmember's head location to 10 dB above background noise levels during crew sleep periods; and the noise attenuation effectiveness of hearing protection may not be used to satisfy this requirement.

[Rationale: Impulse and intermittent noise is to be limited to 10 dB or less above the background noise to avoid waking crewmembers who are sleeping. Communications and alarms are not subject to this requirement.]

6.6.1.11 Impulse Noise Limit

[V2 6083] The system **shall** limit impulse noise measured at the crewmember's head location to less than 140 dB peak SPL during all mission phases except launch and entry; the noise attenuation effectiveness of hearing protection or communications headsets may not be used to satisfy this requirement.

[Rationale: A limit of 140-dB peak SPL for impulse noise prevents acoustic trauma (MIL-STD-1474, current version).]

6.6.1.12 Narrow-Band Noise Limits

[V2 6084] The maximum SPL of narrow-band noise components and tones **shall** be limited to at least 10 dB less than the broadband SPL of the octave band that contains the component or tone.

Downloaded from http://www.everyspec.com

[Rationale: Narrow-band noise component and tone levels should be limited to 10 dB below the broadband level to prevent irritating and distracting noise conditions, which could affect crew performance.]

6.6.1.13 Infrasonic Sound Pressure Limits

[V2 6085] Infrasonic SPLs, including frequencies from 1 to 20 Hz but not including impulse noise, **shall** be limited to less than 150 dB at the crewmember's head location; the noise attenuation effectiveness of hearing protection or communications headsets may not be used to satisfy this requirement.

[Rationale: The 150-dB limit for infrasonic noise levels in the frequency range from 1 to 20 Hz provides for health and well-being effects. (Refer to ACGIH, Threshold Limit Values (TLVs®), Infrasound and Low-Frequency Sound, 2001.)]

Deleted:

[V2 6086] Requirement deleted.

6.6.1.14 Noise Limit for Personal Communication Devices

[V2 6106] The system **shall** limit the maximum A-weighted sound level at the crewmember's ear created by a personal communication device to 115 dBA or less.

[Rationale: Noise levels above 115 dBA have been shown to produce noise-induced hearing loss. Sound levels produced by personal communication devices are allowed to be at higher levels to overcome the noise generated during launch and descent. A personal communication device may be an integrated part of the EVA helmet or an independent communication headset. OSHA identifies 115 dBA as the allowable ceiling for noise exposure limits. This ceiling limit is allowed as long as it does not result in the overall daily TWA exposure exceeding the limit of 85 dBA per requirement [V2 6073].]

6.6.2 Acoustic Monitoring

6.6.2.1 Acoustic Monitoring

[V2 6087] Broadband and frequency-dependent SPLs **shall** be monitored and quantified as needed for crew health and safety.

[Rationale: Acoustic monitoring is needed to ensure that sound levels during the mission are below established limits for crew health and performance. Periodically on ISS, the crew uses acoustic monitors to monitor their environment.]

Downloaded from http://www.everyspec.com

6.6.2.2 Individual Noise Exposure Monitoring

[V2 6088] Noise exposure levels **shall** be monitored and quantified for each crewmember as needed for crew health and safety.

[Rationale: To protect the crew from excessive noise exposure, the noise exposure experienced by the crew is to be understood. Understanding of noise exposure is critical to the protection of crew hearing and helps determine the degree of remedial actions, including moving to a different environment, hardware shutdown, or proper implementation of countermeasures. Periodically on ISS, the crew uses acoustic monitors to monitor their environment.]

6.7 Vibration

Limiting crew exposure to vibration is important for mission success. Excessive vibration can cause injury, fatigue, discomfort, vision degradation, and reduced fine motor control.

6.7.1 Whole Body Vibration

6.7.1.1 Vibration During Pre-Flight

[V2 6089] The system **shall** limit vibration to the crew such that the frequency-weighted acceleration between 0.1 to 0.5 Hz in each of the X, Y, and Z axes is less than 0.05 g (0.5 m/s^2) root mean square (RMS) for each 10-minute interval during pre-launch (when calculated in accordance with ISO 2631-1:1997, Mechanical vibration and shock - Evaluation of human exposure to whole-body vibration - Part 1: General requirements, Annex D, Equation D-1).

[Rationale: Low-frequency vibration, especially in the range between 0.1 and 0.5 Hz, has the potential to cause motion sickness over relatively short exposure periods. This may be encountered while the crew is in the vehicle during the pre-launch period, given that a tall vehicle stack may be susceptible to back-and-forth sway. Reducing the amount of sway will prevent the onset of motion sickness during the pre-launch phase. According to ISO 2631-1: 1997, Annex D, the percentage of unadapted adults who may vomit is equal to 1.3 motion sickness dose value. The value 0.05 g weighted RMS acceleration indicates that approximately 17% or 1 out of 6 crewmembers may vomit. Although ISO 2631-1:1997 limits the acceleration measurement for assessing motion sickness to the vertical direction, this is based on the assumption that the human is in the seated upright posture. Since occupants of a vehicle are likely to be in the semi-supine posture, the requirement is applied to all three orthogonal axes (X, Y, and Z). The purpose of the 10-minute integration time is to constrain the deviations around the permitted average sway during a 2-hour pre-launch period.]

6.7.1.2 Vibration Exposures During Dynamic Phases of Flight

[V2 6090] The system **shall** limit vibration during dynamic phases of flight to the crew such that the vectorial sum of the X, Y, and Z accelerations between 0.5 and 80 Hz, calculated in 1-s intervals and weighted in accordance with ISO 2631-1:1997(E), is less than or equal to the levels

Downloaded from http://www.everyspec.com

plotted for the accumulated durations in Table 9, Frequency-Weighted Vibration Limits by Exposure Time during Dynamic Phases of Flight.

[Rationale: Although there are limited data on the effects of high levels of vibration on health, especially during concurrent hypergravity acceleration, i.e., >1-g bias, internal organs and tissue structures may be damaged if the vibration amplitude goes over these time durations. This duration (under 10 minutes) is expected to bracket the vibration period during ascent and return. If the dynamic event exceeds this 10-minute duration, requirement [V2 6091] "Long-Duration Vibration Exposure Limits for Health during Non-Sleep Phases of Mission," has to be used from the 10-minute point onward. In accordance with ISO 2631-1, Section 6.3.1, vibration calculations shall be based on a running 1-second time window.]

Table 9—Frequency-Weighted Vibration Limits by Exposure Time during Dynamic Phases of Flight

Maximum Vibration Exposure Duration per 24-hr Period	Maximum Frequency-Weighted Acceleration
10 min	3.9 m/s^2 RMS (0.4 g RMS)
1 min	5.9 m/s^2 RMS (0.6 g RMS)

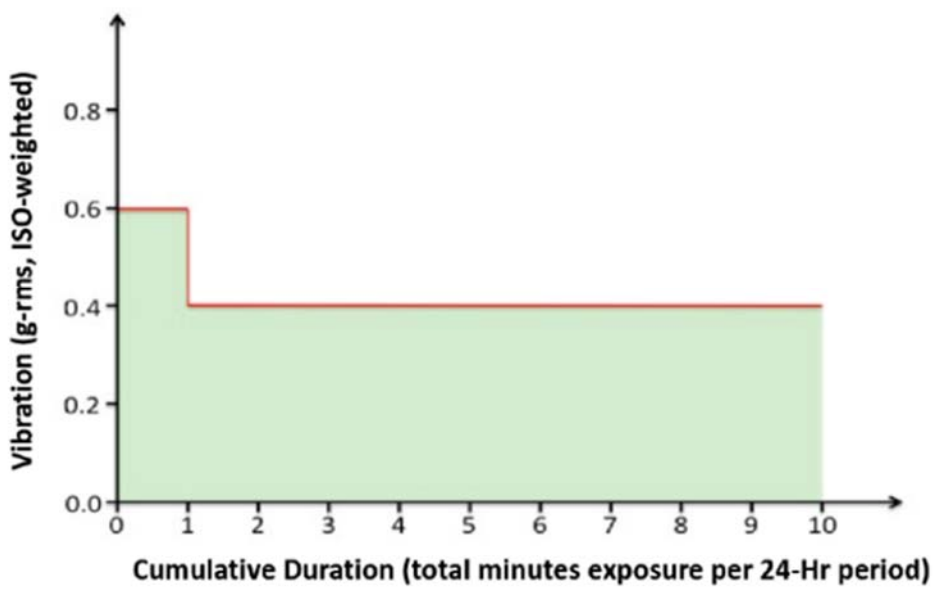

6.7.1.3 Long-Duration Vibration Exposure Limits for Health during Non-Sleep Phases of Mission

[V2 6091] The system **shall** limit vibration to the crew such that the vectorial sum of the X, Y, and Z frequency-weighted accelerations, as computed according to ISO 2631-1:1997(E), do not exceed the minimum health guidance caution zone level defined by Figure B.1 in ISO 2631-1:1997(E), Annex B.

Downloaded from http://www.everyspec.com

[Rationale: Biodynamic and epidemiological research provides evidence of elevated health risk related to long-term exposure to high-intensity whole-body vibration. According to ISO 2631-1:1997(E) Annex B.3.1, "[f]or exposures below the [health guidance caution] zone, health effects have not been clearly documented and/or objectively observed."]

6.7.1.4 Vibration Exposure Limits during Sleep

[V2 6092] The system **shall** limit vibration to the crew such that the acceleration between 1.0 and 80 Hz in each of the X, Y, and Z axes, weighted in accordance with ISO 20283-5, Mechanical vibration—Measurement of vibration on ships; Part 5 - Guidelines for the measurement, evaluation and reporting of vibration with regard to habitability on passenger and merchant ships, Annex A, is less than 0.01 g (0.1 m/s^2) RMS for each 2-minute interval during the crew sleep period.

[Rationale: For long-duration exposure (~8 hours), smaller vibrations to which the crew is exposed can adversely affect crew sleep.

6.7.1.5 Vibration Limits for Performance

[V2 6093] Crew task performance (e.g., motor control accuracy and precision, vision/readability, speech clarity, attentional focus) **shall** not be degraded by vibration.

[Rationale: Tasks and associated equipment should be designed to avoid unacceptable performance degradation during periods of vibration. Thus, while vibration limits may depend on the specific task, specific tasks may be selected or designed to accommodate the associated vibration level. Performance criteria need to be established for tasks and then an assessment made for the impact of vibration on performance. The level and fidelity of assessment will depend on the criticality of the task.]

6.7.2 Hand Vibration

[V2 6094] The system, including tools, equipment, and processes, **shall** limit vibration to the crewmembers' hands such that the accelerations, as computed according to ANSI S2.70-2006, Guide for the Measurement and Evaluation of Human Exposure to Vibration Transmitted to the Hand, do not exceed the Daily Exposure Action Value defined by ANSI S2.70-2006, Annex A, Figure A.1.

[Rationale: In accordance with ANSI S2.70-2006, Annex A.1.1, the Daily Exposure Action Value delineates the health risk threshold defined as "the dose of hand-transmitted vibration exposure sufficient to produce abnormal signs, symptoms, and laboratory findings in the vascular, bone or joint, neurological, or muscular systems of the hands and arms in some exposed individuals."]

Downloaded from http://www.everyspec.com

6.8 Radiation

6.8.1 Ionizing Radiation

Crew occupational exposure to ionizing radiation is managed through system design, in-flight monitoring and procedures, mission architecture and planning, and the application of appropriate countermeasures. Space Permissible Exposure Limits (PELs) are specified in NASA-STD-3001, Volume 1, and include age- and gender-dependent career cancer risks limits and dose limits for short–term and career non-cancer effects. As defined in NASA-STD-3001, Volume 1, exposures are maintained as low as reasonably achievable (ALARA) to ensure astronauts do not approach radiation limits and that such limits are not considered as tolerance values. In practice, the application of the ALARA principle dictates that actions be taken during design and operational phases to manage and limit exposures to ionizing radiation.

6.8.1.1 Ionizing Radiation Protection Limit

[V2 6095] The program **shall** set system design requirements to prevent potential crewmembers from exceeding PELs as set forth in NASA-STD-3001, Volume 1.

[Rationale: The radiation design requirement is imposed to limit the risk of exposure-induced death (REID) and to prevent clinically significant health effects, including performance degradation, sickness, or death in flight as discussed in NASA-STD-3001, Volume 1. The mission scenario and prior crew exposure are to be considered for mission planning and allocation of system design limits across architectural elements, including EVA. The program is to consider the cumulative REID over several missions for individual astronauts in setting the design requirements. This allows experienced crewmembers to potentially support multiple missions; however, the minimum functionality of protection to the most restrictive career limit does not allow unrestricted crew selection related to a crewmember's having prior radiation exposures. That is, previous exposures are to be taken into account during crew selection to ensure that career PELs are not violated. Examples of the various mission and crew selection scenarios are discussed in the HIDH.]

6.8.1.2 Crew Age/Gender Definition for Design Requirements

[V2 6096] The program **shall** set an age- and gender-dependent baseline of crew makeup when setting radiation design requirements.

[Rationale: Career cancer risk limits are age- and gender-specific to account for latency effects and differences in tissue types, sensitivities, and life-spans between genders. In many mission scenarios, the allocation of system design requirements is driven by a 95th percentile confidence of not exceeding career cancer limits for young females. Since the design requirements are derived based on an age- and gender-risk projection, the crew makeup is to be specified. Future reduction in the uncertainty of the REID determination may change this condition.]

Downloaded from http://www.everyspec.com

6.8.1.3 Crew Radiation Exposure Limits

[V2 6097] The program **shall** design systems using the ALARA principle to limit crew radiation exposure.

[Rationale: The ALARA principle is a legal requirement intended to ensure astronaut safety. An important function of ALARA is to ensure that astronauts do not approach radiation limits and that such limits are not considered tolerance values. ALARA is an iterative process of integrating radiation protection into the design process, ensuring optimization of the design to afford the most protection possible, within other constraints of the vehicle systems. The protection from radiation exposure is ALARA when the expenditure of further resources would be unwarranted by the reduction in exposure that would be achieved.]

6.8.1.4 Radiation Environments

[V2 6098] The program **shall** specify the radiation environments to be used in verifying the radiation design requirements.

[Rationale: The relevant space radiation environment is to be used in establishing system design requirements, vehicle design and development of all program architectural elements, and verification of requirements. System design requirements derived from the uncertainty in the calculation of cancer career risk limits are to specify the relevant radiation environment used in determining the requirement, since the 95% confidence interval depends upon the incident radiation field (solar particle event (SPE), galactic cosmic ray (GCR)) and amount of shielding provided. Relevant space radiation parameters include solar maximum and minimum conditions, energy spectra, or precise model inputs, assumptions, and model options.]

6.8.1.5 Space Weather Monitoring

[V2 6099] The program **shall** set requirements specifying appropriate capabilities to be provided for real-time monitoring of space weather for characterization of the radiation environment and operational response by ground personnel and the crew.

[Rationale: Radiation protection for humans in space differs from that on Earth because of the distinct types of radiation, the small population of workers, and the remote location of astronauts during spaceflight. Radiation sources in space have distinct physical and biological damage properties compared to terrestrial radiation, and the spectrum and energy of concern for humans differ from that for electronics. Space weather can directly impact a broad portion of the space radiation environment on short- and long-time scales. Space weather conditions are to be known at all times during missions to allow for appropriate radiation protection planning.]

6.8.1.6 Ionizing Radiation Alerting

[V2 6100] The system **shall** include a method to alert all crewmembers when radiation levels are expected to exceed acceptable levels.

Downloaded from http://www.everyspec.com

[Rationale: The data from charged particle monitoring are the fundamental environmental information required for radiation transport calculations and crew exposure evaluation. Given an accurately measured energy spectra incident on the vehicle during an SPE, detailed crew exposure can be evaluated. This limits the uncertainty of a single absorbed dose measurement in determining crew exposure from an SPE. The crew, at all times, is to be alerted to excessive fluence of particles. Should communications from the ground be interrupted or lost, the crew requires onboard warnings when the radiation environment crosses dangerous thresholds so that appropriate countermeasure actions can be taken. Varying user-defined thresholds may be set according to the radiation environmental conditions that may be encountered, depending on mission phase. The intent is for the vehicle data management system to provide the alerting functionality. Crew needs to be given sufficient time to prepare for a high radiation event.]

6.8.1.7 Ionizing Radiation Dose Monitoring

[V2 6101] To characterize and manage radiation exposures, the program **shall** provide methods for monitoring personal dose and dose equivalent exposure, ambient monitoring of particle fluence as a function of direction, energy, and elemental charge and monitoring of ambient dose and ambient dose equivalent.

[Rationale: These measurements are the primary means for controlling crew exposure during missions to ensure that short-term and career space PELs, as specified in NASA-STD-3001, Volume 1, are not exceeded. Tissue-equivalent micro-dosimeters have been used extensively for crew exposure monitoring in space for this purpose. There is a large set of data and calculations in the published literature that can be directly applied to crew exposure and risk determination, using tissue-equivalent micro-dosimeters. Passive area monitors provide a time-integrated measure of the spatial distribution of exposure rates. The exposure rates change with stowage reconfigurations. Knowledge of the spatial distribution of exposure rate is necessary to identify areas that have a relatively high exposure rate, i.e., avoidance areas, and to reconstruct a crewmember's exposure in the event of lost or unusable personal dosimeter data. The data are used to track the crew exposure throughout the mission, as well as to provide positive indication of proper health and status of the absorbed dose instrument. Passive dosimeters collect data even during situations when power is lost to other instruments. Radiation data are vital for quantifying in-flight risks to the crew and for allowing mission operations to advise the crew on appropriate action in response to an SPE. For periods of time when the crew is not in communication with mission operations, the crew is to be able to ascertain the radiation conditions within the vehicle and take appropriate actions as required. The changes in the radiation environment that could cause additional crew exposure can occur in time periods as small as 1 to 5 minutes. The corresponding EVA spacesuit requirement for radiation dose monitoring is defined in section 11.1.2.4, EVA Suit Radiation Monitoring [V2 11010], in this NASA Technical Standard.]

Downloaded from http://www.everyspec.com

6.8.2 Non-Ionizing Radiation

Sources of non-ionizing radiation are present in spaceflight applications, and exposure is potentially hazardous. Astronaut occupational exposure to non-ionizing radiation is managed through mission architecture, system design, procedures and planning, and application of appropriate countermeasures. This NASA Technical Standard classifies non-ionizing radiation into three categories: radio frequency (RF) radiation, lasers, and incoherent electromagnetic radiation.

6.8.2.1 RF Non-Ionizing Radiation Exposure Limits

[V2 6102] The system **shall** protect the crew from exposure to RF radiation to the limits stated in Table 10, Maximum Permissible Exposure (MPE) to RF Electromagnetic Fields (modified from IEEE C95.1, IEEE Standard for Safety Levels with Respect to Human Exposure to Radio-Frequency Electromagnetic Fields, 3 kHz to 300 GHz – Description, lower tier), and shown graphically in Figure 10, RF Electromagnetic Field Exposure Limits.

[Rationale: These limits were modified from IEEE C95.1 to remove an excessive factor of safety in the power density limit for general populations, including children. Design requirements are to cover exposure RF radiation for the duration of a mission. Limits are intended to establish exposure conditions for RF and microwave radiation to which it is believed that nearly all workers can be repeatedly exposed without injury.]

Table 10—Maximum Permissible Exposure (MPE) to RF Electromagnetic Fields (modified from IEEE C95.1, lower tier)

Frequency Range (MHz)	RMS Electric Field Strength (E)[a] (V/m)	RMS Magnetic Field Strength (H)[a] (A/m)	RMS Power Density (S) E–Field, H–Field (W/m^2)	Averaging Time[b] $\|E\|^2$, $\|H\|^2$, or S (min)	
0.1 – 1.34	614	$16.3/f_M$	$(1{,}000,\ 100{,}000/f_M^2)$ [c]	6	6
1.34 – 3	$823.8/f_M$	$16.3/f_M$	$(1{,}800/f_M^2,\ 100{,}000/f_M^2)$	$f_M^2/0.3$	6
3 – 30	$823.8/f_M$	$16.3/f_M$	$(1{,}800/f_M^2,\ 100{,}000/f_M^2)$	30	6
30 – 100	27.5	$158.3/f_M^{1.668}$	$(2,\ 9{,}400{,}000/f_M^{3.336})$	30	$0.0636 f_M^{1.337}$
100 – 300	27.5	0.0729	2	30	30
300 - 5000	–	–	$f/150$	30	
5000 - 15000	–	–	$f/150$	$150/f_G$	
15000 – 30,000	–	–	100	$150/f_G$	
30,000 – 100,000	–	–	100	$25.24/f_G^{0.476}$	
100,000 – 300,000	–	–	100	$5048/[(9f_G-700)f_G^{0.476}]$	

Note: f_M is the frequency in MHz; f_G is the frequency in GHz.

(a) For exposures that are uniform over the dimensions of the body such as certain far-field plane-wave exposures, the exposure field strengths and power densities are compared with the MPEs in the table. For non-uniform exposures, the mean values of the exposure fields, as obtained by spatially

Downloaded from http://www.everyspec.com

Frequency Range (MHz)	RMS Electric Field Strength (E)[a] (V/m)	RMS Magnetic Field Strength (H)[a] (A/m)	RMS Power Density (S) E–Field, H–Field (W/m^2)	Averaging Time[b] $\|E\|^2$, $\|H\|^2$, or S (min)
averaging the squares of the field strengths or averaging the power densities over an area equivalent to the vertical cross section of the human body (projected area) or a smaller area, depending on the frequency, are compared with the MPEs in the table. For further details, see the notes to Table 8 and Table 9 of IEEE C95.1. (b) The left column is the averaging time for $\|E\|^2$; the right column is the averaging time for $\|H\|^2$. For frequencies greater than 400 MHz, the averaging time is for power density (S). (c) These plane-wave equivalent power density values are commonly used as a convenient comparison with MPEs at higher frequencies and are displayed on some instruments in use.				

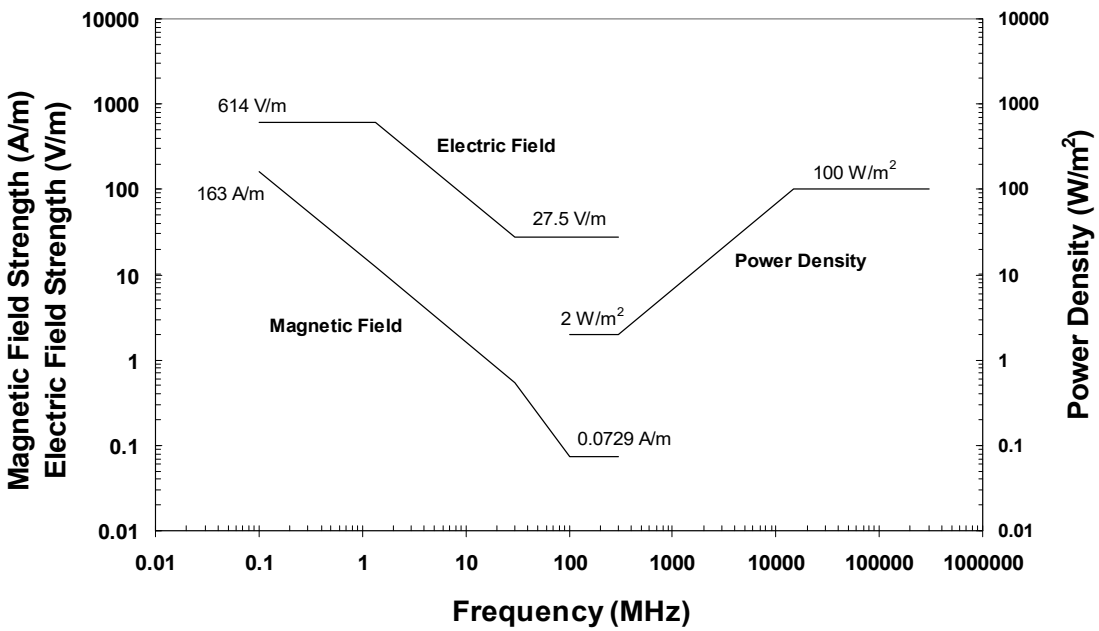

(Illustrated to show whole-body resonance effects around 100 MHz) (modified from IEEE C95.1)

Figure 10—RF Electromagnetic Field Exposure Limits

6.8.2.2 Laser Exposure Limits

[V2 6103] The system **shall** protect the crew from exposure to lasers in accordance with the limits in ANSI Z136.1, American National Standard for Safe Use of Lasers, and ACGIH, Threshold Limit Values (TLVs®) and Biological Exposure Indices (BEIs®) Based on the Documentation of the Threshold Limit Values for Chemical Substances and Physical Agents & Biological Exposure Indices, for limiting skin and ocular exposure to both continuous wave and repetitively pulsed lasers.

Downloaded from http://www.everyspec.com

[Rationale: Design requirements are to cover exposure to both continuous and repetitively pulsed lasers to protect against skin and ocular injury. The limits are adopted from the Laser Institute of America's publication ANSI Z136.1. This requirement applies to lasers used both internal and external to the spacecraft.]

6.8.2.3 Limits on Exposure to Incoherent Electromagnetic Radiation

[V2 6104] For crew exposure to the electromagnetic spectrum from the ultraviolet (180 nm) to the far infrared (3,000 nm), the methodologies given in ACGIH **shall** be adopted and amended for use by NASA through the relaxation of the limits by a factor of 5, with the exception of the calculation for ultraviolet exposure, which is not amended.

[Rationale: The factor of 5 removes the excessive safety margin imposed by the ACGIH on general populations. This methodology allows for the quantification of the relationship between source strength and acceptable exposure times for each of four potential injury pathways: retinal thermal injury caused by exposure to visible light, retinal photochemical injury caused by chronic exposure to blue-light, thermal injury to the ocular lens and cornea caused by infrared exposure, and exposure of the unprotected skin or eye to ultraviolet radiation. These limits do not apply to laser exposure. (See section 6.8.2.2, Laser Exposure Limits, in this NASA Technical Standard.) The numerical values used by the ACGIH are amended for use by NASA by the insertion of a factor of 0.2 in the source term of each calculation, with the exception of the calculation for ultraviolet exposure, which is not amended.]

7. HABITABILITY FUNCTIONS

This section addresses the features of the system required for human occupancy. The specific needs and designs for each feature vary with the type of mission.

7.1 Food and Nutrition

7.1.1 Food Quality and Quantity

7.1.1.1 Food Quality

[V2 7001] The food system **shall** provide the capability to maintain food safety and nutrition during all phases of the mission.

[Rationale: A nutritious, viable, and stable food system that the crew is willing and able to consume is critical for maintaining the health of the crew. The viability of the food system requires not only that food be available for consumption but also that the food has the appropriate nutrient mix to maintain crew health over time. The food is to retain its safety, nutrition, and acceptability for any spaceflight concept of operations, be it of short or long duration.]

Downloaded from http://www.everyspec.com

7.1.1.2 Food Acceptability

[V2 7002] The system **shall** provide food that is acceptable to the crew for the duration of the mission.

[Rationale: A viable and stable food system that the crew is willing and able to consume is critical for maintaining the health of the crew. The crew's willingness to consume these nutrients is impacted by the variety and flavor of the food. Food can lose its acceptance if eaten too frequently, so a variety of foods may offer a solution. The form, texture, and flavor of food are also important for adding variety, as long as nutritional content is not affected.

The dynamics of spaceflight present numerous challenges to food acceptability. A NASA food item measuring an overall acceptability rating of 6.0 or better on a 9-point hedonic scale for the duration of the mission is considered acceptable. The hedonic scale is a quantitative method that is accepted throughout the food science industry as a means to determine acceptability. Further information regarding methods for determining food acceptability can be found in Meilgaard, M., et al. (1999). Food freshness will impact acceptability over time; thus, it is imperative to provide acceptable food initially and a packaging and storage system that will maintain this freshness. Alternatives include growing food or providing basic ingredients and allowing flexibility in their combination and preparation.]

7.1.1.3 Food Caloric Content

[V2 7003] The food system **shall** provide each crewmember with a minimum number of calories per day, based upon estimated energy requirements (EER) with an activity factor of 1.25 (active) as calculated according to Table 11, EER Equations.

[Rationale: A viable and stable food system that the crew is willing and able to consume is critical for maintaining the health of the crew. The food provided is to be of sufficient quality, quantity, and nutrient content to meet the energy demands of various activities, while accommodating each crewmember's individual needs and desires. Guidelines for nutrition requirements are documented in the reference document Nutrition Requirements, Standards, and Operating Bands for Exploration Missions.]

Table 11—EER Equations

Nominal Metabolic Intake <u>EER for men 19 years old and older</u> EER (kcal/day) = 622 – 9.53 × Age [y] + 1.25 × (15.9 × Body Mass [kg] + 539.6 × Height [m]) <u>EER for women 19 years old and older</u> EER = 354 – 6.91 × Age [y] + 1.25 × (9.36 × Body Mass [kg] + 726 × Height [m])

Downloaded from http://www.everyspec.com

7.1.1.4 EVA Food Caloric Content

[V2 7004] For crewmembers performing EVA operations, the food system **shall** provide an additional 837 kJ (200 kcal) per EVA hour above nominal metabolic intake as defined by section 7.1.1.3, Food Caloric Content [V2 7003], in this NASA Technical Standard.

[Rationale: Additional energy and nutrients are necessary during EVA operations, as crewmember energy expenditure is greater during those activities. Consumption of an additional 837 kJ (200 kcal), similar in nutrient content to the rest of the diet, per hour of EVA would allow a crewmember to maintain lean body weight during the course of the mission. This is the metabolic energy replacement requirement for moderate to heavy EVA tasks.]

7.1.1.5 Food Macronutrients

[V2 7005] The diet for each crewmember **shall** include macronutrients in the quantities listed in Table 12, Macronutrient Guidelines for Spaceflight.

[Rationale: Macronutrients are nutrients that provide calories for energy and include carbohydrates, protein, and fat. These macronutrients are necessary to maintain the health of the crew.]

Table 12—Macronutrient Guidelines for Spaceflight

Nutrients	Daily Dietary Intake*
Protein	0.8 g/kg
	And ≤35% of the total daily energy intake
	And 2/3 of the amount in the form of animal protein and 1/3 in the form of vegetable protein
Carbohydrate	50–55% of the total daily energy intake
Fat	25–35% of the total daily energy intake
Ω-6 fatty acids	14 g
Ω-3 fatty acids	1.1–1.6 g
Saturated fat	<7% of total daily energy intake
Trans fatty acids	<1% of total daily energy intake
Cholesterol	<300 mg/day
Fiber	21-38 g

* This field is only expressed in metric units of measure.

7.1.1.6 Food Micronutrients

[V2 7006] The diet for each crewmember **shall** include micronutrients in the quantities listed in Table 13, Micronutrient Guidelines for Spaceflight.

[Rationale: Micronutrients are nutrients that the human body needs in smaller amounts and include vitamins and minerals. These micronutrients are necessary to maintain the health of the crew.]

Downloaded from http://www.everyspec.com

Table 13—Micronutrient Guidelines for Spaceflight

Vitamin or Mineral	Daily Dietary Intake*
Vitamin A	700–900 μg
Vitamin D	25 μg
Vitamin K	Women: 90 μg
	Men: 120 μg
Vitamin E	15 mg
Vitamin C	90 mg
Vitamin B_{12}	2.4 μg
Vitamin B_6	1.7 mg
Thiamin	Women: 1.1 mg
	Men: 1.2 mg
Riboflavin	1.3 mg
Folate	400 μg
Niacin	16 mg niacin equivalents
Biotin	30 μg
Pantothenic acid	5 mg
Calcium	1000–1500 mg
Phosphorus	700 mg
	And ≤1.5 × calcium intake
Magnesium	Women: 320 mg
	Men: 420 mg
	And ≤350 mg from supplements only
Sodium	1500–2300 mg
Potassium	4.7 g
Iron	8–10 mg
Copper	0.5–0.9 mg
Manganese	Women: 1.8 mg
	Men: 2.3 mg
Fluoride	Women: 3 mg
	Men: 4 mg
Zinc	11 mg
Selenium	55–400 μg
Iodine	150 μg
Chromium	35 μg
Note: Compiled from Nutrition Requirements, Standards, and Operating Bands for Exploration Missions, JSC NASA Nutritional Biochemistry Group. * This field is only expressed in metric units of measure.	

7.1.1.7 Food Microorganism Levels

[V2 7007] Microorganism levels in the food **shall** not exceed those specified in Table 14, Food Microorganism Levels (JSC-16888, Microbiology Operations Plan for Spaceflight).

Downloaded from http://www.everyspec.com

[Rationale: To maintain the health and safety of the crew, it is necessary to control microorganism growth.]

Table 14—Food Microorganism Levels

Area/Item	Microorganism Tolerances	
Food Production Area	**Samples Collected**	**Limits**
Surfaces	3 surfaces sampled[a]	3000 Colony Forming Units/ft^2 (total aerobic count)
Packaging Materials	Before use	3000 CFU per Pouch, Septum, 25 cm^2 or base
Air	1 sample of 320 L monthly	113 CFU/320 L (total aerobic count)

Food Product	Factor	Limits
Non-Thermostabilized[b]	Total aerobic count	20,000 CFU/g for any single sample (or if any two samples from a lot exceed 10,000 CFU/g)
	Enterobacteriaceae	100 CFU/g for any single sample (or if any two samples from a lot exceed 10 CFU/g). No detected serious or severe hazard human enteric pathogenic organisms
	Salmonella	0 CFU/g for any single sample
	Yeasts and molds	1000 CFU/g for any single sample (or if any two samples from a lot exceed 100 CFU/g or if any two samples from a lot exceed 10 CFU/g *Aspergillis flavus*)

Downloaded from http://www.everyspec.com

Commercially Sterile Products (thermostabilized and irradiated)	No sample submitted for microbiological analysis	100% inspection for package integrity
Notes: a. Samples collected only on days that food facility is in operation. Additional environmental samples will be collected when there is a 1-hour break in activity, or after 5 hours of continuous work. b. Food samples considered "finished" products that do not require additional repackaging are tested only for total aerobic counts.		

7.1.2 Food Preparation, Consumption, and Cleanup

7.1.2.1 Food Preparation

[V2 7008] The system **shall** provide the capability for preparation, consumption, and stowage of food.

[Rationale: A viable and stable food system that the crew is willing and able to consume is critical for maintaining the health of the crew. Preparation addresses the heating of the food, if necessary, and the use of whatever equipment is required. Consumption relies on utensils or implements such as forks or spoons, a method to open packaging, or a method to rehydrate. Stowage is needed for the food, as well as all the implements for preparation and consumption.]

7.1.2.2 Food Preparation and Cleanup

[V2 7009] The food system **shall** allow the crew to unstow supplies, prepare meals, and clean up for all crewmembers within the allotted meal schedule.

[Rationale: Meal preparation and cleanup activity planning takes into account previous spaceflight lessons learned, the water delivery and food heating systems, stowage configuration, and desire of the crew to dine together. This is to help ensure that mission goals, objectives, and timelines are not negatively impacted.]

7.1.2.3 Food Contamination Control

[V2 7010] The food storage, preparation, and consumption areas **shall** be designed and located to protect against cross-contamination between food and the environment.

[Rationale: Contamination can occur from a number of sources, including proximity to cross-contamination, toxic materials, and the growth of microorganisms. Food is to be processed properly and stored to control or eliminate microbiological concerns. Furthermore, it is critical for crew physical and psychological health that waste management systems (such as food waste, body waste, personal hygiene, exercise) are separate from food preparation, stowage, and consumption activities to protect from cross-contamination. Spaceflight lessons learned indicate this has been an issue during Apollo and ISS missions.]

Downloaded from http://www.everyspec.com

7.1.2.4 Food and Beverage Heating

[V2 7011] The system **shall** provide the capability to heat food and beverages to a temperature appropriate for the given item.

[Rationale: Heating is necessary for the subjective quality of food. Heating food and liquid enhances the palatability of some items, which is important for psychological health, as well as for ensuring that crewmembers eat the food provided. Maintaining the temperature of rehydrated food helps prevent microbial growth. The vehicle is to provide the ability to heat dehydrated and non-rehydrated foods.]

7.1.2.5 Dining Accommodations

[V2 7012] Crewmembers **shall** have the capability to dine together.

[Rationale: Dining together has been shown to support the crew's psychological health and well-being. The food system should account for the volume for all the crew to prepare their meal, gather simultaneously, and accommodate any equipment needed to restrain the food and implements, including utensils necessary for dining. The design and layout of the dining space should be based on a functional task analysis. The specific volume and layout are to meet the requirements defined in Section 8, Architecture, in this NASA Technical Standard. Additional guidance for design for habitable volume is provided in Chapter 8 of the HIDH.]

7.1.2.6 Food System Waste

[V2 7013] The system **shall** provide readily accessible trash collection and control of food system waste.

[Rationale: Food trash is to be considered in the overall plan for all types of trash. It is important to manage any food waste to control odors and microorganism growth. Proximity to the food preparation and consumption location facilitates ease of use and efficiency.]

7.1.2.7 Food Spill Control

[V2 7014] The system **shall** provide the ability to control and remove food particles and spills.

[Rationale: The ability to clean spills or food particles in any area of the vehicle helps to minimize contamination of the spacecraft. Contamination of the food system might occur if spills are not contained, and the physical debris of food particles can jeopardize the safety and health of the crew.]

Downloaded from http://www.everyspec.com

7.1.2.8 Food System Cleaning and Sanitizing

[V2 7015] The system **shall** provide methods for cleaning and sanitizing food facilities, equipment, and work areas.

[Rationale: The ability to clean and disinfect the food system areas helps to minimize microbial contamination of the food system. Contamination of the food system by physical debris can jeopardize the safety and health of the crew.]

7.2 Personal Hygiene

7.2.1 Personal Hygiene Capability

[V2 7016] The system **shall** provide the capability for oral hygiene, personal grooming, and body cleansing.

[Rationale: Oral hygiene and personal grooming activities are to be accommodated by the system through provision of adequate and comfortable bathing and body waste management facilities as these enhance self-image, improve morale, and increase productivity of the crewmember.]

7.2.2 Body Cleansing Privacy

[V2 7017] The system **shall** provide for privacy during body cleansing.

[Rationale: Certain hygiene functions are to have a degree of privacy, especially in a vehicle in which other crewmembers may be performing other functions simultaneously. Privacy provides for the psychological well-being of the crew and is to be provided for whole-body and partial-body cleaning and donning and doffing of clothing.]

7.2.3 Personal Hygiene Provision

[V2 7018] Personal hygiene items **shall** be provided for each crewmember.

[Rationale: Each crewmember is to have personal hygiene provisions, e.g., tooth brush, tooth paste, deodorant for body cleansing, oral hygiene, and personal grooming throughout each space mission. Personal hygiene equipment and supplies are to accommodate the physiological differences in male and female crewmembers in the microgravity environment.]

7.2.4 Hygiene Maintainability

[V2 7019] The system **shall** provide an environmentally compatible sanitization method for personal hygiene facilities and equipment.

Downloaded from http://www.everyspec.com

[Rationale: To remain hygienic, personal hygiene equipment is to be easily cleaned, sanitized, and maintained. Cleaning and sanitizing helps control odor and microbial growth. As part of the overall maintenance of the hygiene facilities, crewmembers are to have readily accessible trash collection for disposable personal hygiene supplies to minimize crew exposure to the used items.]

7.3 Body Waste Management

7.3.1 Body Waste Management Facilities

7.3.1.1 Body Waste Management Capability

[V2 7020] The system **shall** provide the capability for collection, containment, and disposal of body waste.

[Rationale: A body waste management system facilitates the clean, efficient, and reliable collection and management of human waste (urine, feces, vomitus, and menses) and associated equipment and supplies.]

7.3.1.2 Body Waste Management System Location

[V2 7021] The body waste management system **shall** be isolated from the food preparation and consumption areas for aesthetic and hygienic purposes.

[Rationale: Contamination can occur from a number of sources, including proximity to cross-contamination and the growth of microorganisms. It is critical for crew physical and psychological health that any interference between body waste management functions and food preparation and consumption be prevented. Spaceflight lessons learned indicate this has been an issue during Apollo and ISS missions.]

7.3.1.3 Body Waste Management Privacy

[V2 7022] The system **shall** provide privacy during use of the body waste management system.

[Rationale: Certain hygiene functions are to have a degree of privacy, especially in a vehicle in which other crewmembers may be performing other functions simultaneously. Privacy provides for the psychological well-being of the crew and is to be provided for use of the waste management system.]

7.3.1.4 Body Waste Management Provision

[V2 7023] Body waste management supplies **shall** be accessible to and within reach of crewmembers using the waste management system.

Downloaded from http://www.everyspec.com

[Rationale: Personal hygiene and body waste management supplies such as tissues and towels may need to be accessed rapidly.]

7.3.1.5 Body Waste Accommodation

[V2 7024] The body waste management system **shall** allow a crewmember to urinate and defecate simultaneously.

[Rationale: Accidental discharge of one or both waste components into the habitable volume is not wanted, and it may be difficult for a human to relax the gastrointestinal control sphincter without relaxing the urinary voluntary control sphincter and vice versa.]

7.3.1.6 Body Waste Containment

[V2 7025] The system **shall** prevent the release of body waste from the waste management system.

[Rationale: A release of waste into the closed environment of a spacecraft can contaminate the human and risk the initiation or spread of disease but also can contaminate surfaces, materials, and consumables.]

7.3.1.7 Body Waste Odor

[V2 7026] The system **shall** provide odor control for the waste management system.

[Rationale: Uncontrolled waste-associated odors can have an adverse effect on crew performance and can exacerbate pre-existing symptoms of space motion sickness.]

7.3.1.8 Body Waste Trash Receptacle Accessibility

[V2 7027] Body waste management trash collection **shall** be accessible to and within reach of crewmembers using the waste management system.

[Rationale: Waste management items that cannot be collected and contained with human waste are to be disposed of immediately after use. Waste management trash collection items are to be within reach of the crewmember so that it is not necessary to egress the waste management restraint system or to access closed compartments.]

7.3.1.9 Private Body Inspection Accommodation

[V2 7028] The body waste management system **shall** provide a means and sufficient volume for crewmembers to perform private bodily self-inspection and cleaning after urination and defecation.

Downloaded from http://www.everyspec.com

[Rationale: In microgravity, body waste can float; therefore, after waste management, it is important for crewmembers to verify that they are clean.]

7.3.1.10 Body Waste Management Maintenance

[V2 7029] All body waste management facilities and equipment **shall** be capable of being cleaned, sanitized, and maintained.

[Rationale: To remain hygienic, body waste management equipment is to be easily cleaned, sanitized, and maintained. Cleaning and sanitizing helps control odor and microbial growth. As part of the overall maintenance of the hygiene facilities, crewmembers are to have readily accessible trash collection for disposable personal hygiene supplies to minimize crew exposure to the used items.]

7.3.2 Body Waste Capacity

Average values are representative over the entire mission and include occasional occurrences of the maximum values. Fecal mass values are for the biological material only. Fecal collection and containment include both the biological material and all hygiene products required for immediate body cleaning after defecation. The body will generate the same quantity of fecal material based on the food consumption and an individual's metabolism. The variables are the evacuation frequency and water content. An individual can only evacuate the maximum value at a lower rate than the average rate because it is limited by food consumption inputs. Diarrheal events are assumed to be in place of normal fecal elimination with the increased quantity based on increased water content and minor amounts of intestinal cellular material. In practice, a waste system must be capable of accommodating fecal consistency across the continuum from solid low water content to diarrheal without allow escapes of fecal material to the cabin environment.

*Fecal material has a high water content and is assumed to have a specific gravity of 1.0 for purposes of this specification***.**

7.3.2.1 Average Feces per Day

[V2 7030] The human body waste management system **shall** be capable of collecting and containing an average of 150 g (0.3 lb) and 150 ml (5 oz) of solid fecal matter per crewmember per defecation at an average of two defecations per day.

[Rationale: Fecal waste collection is to be performed in a manner that minimizes possible escape of fecal contents into the habitable vehicle during microgravity operations because of the high content of bacteria contained in the stool. In addition, there is the potential of injury to crewmembers and hardware that could result from such dissemination. The collection capacity accounts for the average healthy adult stool output/day. The number of defecations per day is individually variable ranging from two times per week to five times per day, with the assumed average of two times per day. Solid fecal matter is the description for fecal material that is

Downloaded from http://www.everyspec.com

eliminated as discrete boli and will have surface characteristics that range from relatively dry to sticky depending on the internal water content.]

7.3.2.2 Maximum Feces per Event

[V2 7031] The nominal human body waste management system **shall** be capable of collecting and containing a maximum of 500 g (1.1 lb) and 500 ml (16.9 oz) of fecal matter per crewmember in a single defecation.

[Rationale: Fecal waste collection is to be performed in a manner that minimizes possible escape of fecal contents into the habitable vehicle during microgravity operations because of the high content of bacteria contained in the stool and because of the potential of injury to crewmembers and hardware that could result from such dissemination. The collection capacity accounts for the healthy adult maximum output during a single event. When a maximum fecal event will occur is unknown, so the human body waste management system must always (nominally) be capable of collecting it.]

7.3.2.3 Average Diarrhea per Day

[V2 7032] The nominal human body waste management system **shall** be capable of collecting and containing eight diarrheal events (average volume of 500 ml (16.9 oz)) per crewmember per day for up to 2 days.

[Rationale: The fecal discharge related to gastrointestinal illness (diarrhea) occurs at an increased frequency but is also variable and unpredictable. The total collection volume is to accommodate diarrhea caused by likely pathogens such as rotavirus and enterotoxigenic E. coli. When a diarrhea event will occur is unknown, so the body waste management system may process the collection differently, e.g., no compaction. Diarrhea is the description for fecal material that has a sufficiently high water content to not form discrete boli.]

7.3.2.4 Maximum Diarrhea per Event

[V2 7033] The nominal human body waste management system **shall** be capable of collecting and containing a maximum diarrhea volume of 1.5 L (0.4 gal) of diarrhea in a single event.

[Rationale: Fecal waste collection is to be performed in a manner that minimizes possible escape of fecal contents into the habitable vehicle during microgravity operations because of the high content of possibly pathogenic bacteria contained in the stool and because of the potential of injury to crewmembers and hardware that could result from such dissemination. The fecal discharge related to gastrointestinal illness (diarrhea) occurs at an increased frequency and volume but is also variable and unpredictable. The volume for a single discharge is to accommodate diarrhea caused by likely pathogens such as rotavirus and enterotoxigenic E coli. The volume 1.5 L (0.4 gal) is based on evaluation of individuals afflicted with pathogenic diarrhea, as found in medical literature, based on most likely maximal discharge in afflicted individuals. The volume 1.5 L (0.4 gal) is a maximum output, and the average output will be

Downloaded from http://www.everyspec.com

0.5 L (0.13 gal). When a maximum diarrhea event will occur is unknown, so the body waste management system must always (nominally) be capable of collecting it. The body waste management system may process the collection differently, e.g., no compaction.]

7.3.2.5 Fecal and Urine Elimination Concurrence

[V2 7085] The body waste management system **shall** be capable of collecting and containing all waste during simultaneous defecation and urination.

[Rationale: It is common for individuals to not be able to separate defecation and urination. Body waste collection systems must have sufficient capability to capture and contain both.]

7.3.2.6 Urine Capacity

[V2 7034] The human body waste management system **shall** be capable of collecting 1 L (33.8 oz) of urine per event with up to six urination events per crewmember per day.

[Rationale: Rarely, a single void might be as much as 1 L (33.8 oz), so the equipment is to be able to accommodate this maximum. The rate of urinary delivery into the system from the body will vary by gender (greater for females because of lower urethral resistance) but averages 10 to 35 ml/s (0.34 to 1.2 oz/s). Maximum flow rate with abdominal straining in a female may be as high as 50 ml/s (1.9 oz/s) for a few seconds.]

7.3.2.7 Urine per Crewmember

[V2 7035] The human body waste management system **shall** be capable of collecting and containing a maximum total urine output volume of $V_u = 3 + 2t$ liters per crewmember, where t is the mission length in days.

[Rationale: Urine production on the first day after launch, i.e., flight day 0, is 3 L (0.8 gal) per crewmember. Urine output may be slightly greater or lower in various phases of the mission associated with gravity transitions and fluid intake levels. The urinary collection system is to be capable of collecting all of the crewmember's output in succession, with an average void varying from 100 to 500 ml (3.4 to 16.9 oz). Rarely, a single void might be as much as 1 L (33.8 oz), so the equipment is to be able to accommodate this maximum. The rate of urinary delivery into the system from the body will vary by gender (greater for females because of lower urethral resistance) but averages 10 to 35 ml/s (0.34 to 1.2 oz/s). Maximum flow rate with abdominal straining in a female may be as high as 50 ml/s (1.9 oz/s) for a few seconds. The voided urine is to be isolated to prevent inadvertent discharge in the cabin that could result in injury to a crewmember's skin or mucous membranes or damage to equipment.]

Downloaded from http://www.everyspec.com

7.3.2.8 Urine Rate

[V2 7036] The human body waste management system **shall** be capable of collecting a maximum flow rate as high as 50 ml/s (1.9 oz/s).

[Rationale: Urine output may be slightly greater or lower in various phases of the mission associated with gravity transitions and fluid intake levels. The urinary collection system is to be capable of collecting all of the crewmember's output in succession, with an average void varying from 100 to 500 ml (3.4 to 16.9 oz). Rarely, a single void might be as much as 1 L (33.8 oz), so the equipment is to be able to accommodate this maximum. The rate of urinary delivery into the system from the body will vary by gender (greater for females because of lower urethral resistance) but averages 10 to 35 ml/s (0.34 to 1.2 oz/s). Maximum flow rate with abdominal straining in a female may be as high as 50 ml/s (1.9 oz/s) for a few seconds. The voided urine is to be isolated to prevent inadvertent discharge in the cabin that could result in injury to a crewmember's skin or mucous membranes or damage to equipment.]

7.3.2.9 Vomitus per Collection and Containment

[V2 7037] The human body waste management system **shall** be capable of collecting and containing vomitus for up to eight events of an average of 500 ml (16.9 oz) in a single event.

[Rationale: Vomiting and its associated odor, mainly produced by the compound putrescence, may trigger a bystander nausea and vomiting reaction in adjacent crewmembers located in close proximity in an enclosed space. Space Adaptation Syndrome (SAS) occurs in up to 70% of first time fliers (30% of whom may experience vomiting) during the first 48 to 72 hours of microgravity. In addition, a possible water landing may cause crewmembers to succumb to sea sickness. The average number of vomiting episodes per crewmember will vary from 1 to 6 per day, over a 2- to 3-day period. Regurgitation of the entire stomach contents results on average in 0.2 to 0.5 L (6.8 to 16.9 oz) of vomitus per event. Stowage and disposal is to be adequate for a worst-case number of involved crew, severity and duration of symptoms, as well as volume of gastrointestinal contents regurgitated.]

7.4 Physiological Countermeasures

7.4.1 Physiological Countermeasures Capability

[V2 7038] The system **shall** provide countermeasures to meet crew bone, muscle, sensory-motor, and cardiovascular requirements defined in NASA-STD-3001, Volume 1.

[Rationale: Exercise is used to maintain crew cardiovascular fitness (to aid in ambulation during gravity transitions and to minimize fatigue), to maintain muscle mass and strength/endurance, for recovery from strenuous tasks and confined postures, and to rehabilitate minor muscle injuries. Exercise also has behavioral health benefits. Exercise is to commence as early as possible during the mission and continue throughout all mission phases in accordance with results from the Apollo crew's participation in the June 2006 Apollo Medical Summit

Downloaded from http://www.everyspec.com

(NASA/TM-2007-214755, The Apollo Medical Operations Project: Recommendations to Improve Crew Health and Performance for Future Exploration Missions and Lunar Surface Operations), and recommendation from the 2005 Musculoskeletal Summit. See Appendix A, Reference Documents, for complete citations.]

7.4.2 Volume Accommodations

[V2 7039] During physiological countermeasure activities, the volume provided **shall** accommodate a person, expected body motions, and any necessary equipment.

[Rationale: The operational envelope is the greatest volume required by a crewmember to use an exercise device (not the deployed volume of the device). The volume is necessary to permit the crewmember to conduct the countermeasure activities properly to maintain health and fitness.]

7.4.3 Physiological Countermeasure Operations

[V2 7040] The physiological countermeasure system design **shall** allow the crew to unstow supplies, perform operations, and stow items within the allotted countermeasure schedule.

[Rationale: The ease and the efficiency of the countermeasure system assist in the crew's being able to perform their countermeasure activities. The crew needs these activities to maintain health and fitness. It can be expected that daily countermeasure activity will occur.]

7.4.4 Environmental Control

[V2 7041] The system environmental control **shall** accommodate the increased O_2 consumption and additional output of heat, CO_2, perspiration droplets, odor, and particulates generated by the crew in an exercise area.

[Rationale: The ppO_2 in the exercise area(s) is to be maintained at normal levels; otherwise, the required physiological capabilities of crewmembers may be impaired. This requirement also addresses any particulate that may be generated by the exercise activity, e.g., skin, hair, or lint from clothing or other materials.]

7.4.5 Orthostatic Intolerance Countermeasures

[V2 7042] The system **shall** provide countermeasures to mitigate the effects of orthostatic intolerance when transitioning from microgravity to gravity environments.

[Rationale: Orthostatic protection is needed to minimize medical and operational impacts. Impacts can include loss of consciousness, inability to operate controls and pilot the vehicle, and inability to egress the vehicle without assistance and thus could jeopardize the success of the re-entry and landing of the vehicle and the safety of the crewmembers. Examples of methods that have been successfully used to prevent orthostasis include fluid/salt loading regimens to maintain hydration, constrictive leg garments to prevent blood pooling, active cooling to

Downloaded from http://www.everyspec.com

maintain crew comfort, and recumbent crewmember seating to improve cerebral blood flow in 1 g.]

7.5 Medical

7.5.1 Medical Capability

[V2 7043] A medical system **shall** be provided to the crew to meet the medical requirements of NASA-STD-3001, Volume 1, in accordance with Table 15, Medical Care Capabilities.

[Rationale: NASA-STD-3001, Volume 1, includes definitions of the levels of medical care required to reduce the risk that exploration missions are impacted by crew medical issues and that long-term astronaut health risks are managed within acceptable limits. The levels of care and associated appendices define the health care, crew protection, and maintenance capability required to support the crew as appropriate for the specific mission destination and duration, as well as for the associated vehicular constraints. As mission duration and complexity increase, the capability required to prevent and manage medical contingencies correspondingly increases. Very short-duration missions, even if outside low Earth orbit (LEO) are considered as Level I capability medical requirements. The ability to provide the designated level of care applies to all flight phases, including during pressurized suited operations.]

Table 15—Medical Care Capabilities

Level of Care	Space Environment	Mission Duration	Capability
I	LEO	<8 days	Space Motion Sickness, Basic Life Support, First Aid, Private Audio, Anaphylaxis Response
II	LEO	<30 days	Level I + Clinical Diagnostics, Ambulatory Care, Private Video, Private Telemedicine
III	Beyond LEO	<30 days	Level II + Limited Advanced Life Support, Trauma Care, Limited Dental Care
IV	Lunar	>30 days	Level III + Medical Imaging, Sustainable Advanced Life Support, Limited Surgical, Dental Care
V	Mars Expedition		Level IV + Autonomous Advanced Life Support and Ambulatory Care, Basic Surgical Care

7.5.2 Medical Treatment Spatial Accommodation

[V2 7044] The medical system **shall** provide volume and surface area to treat a patient and allow access for the medical care provider and equipment.

[Rationale: The size of a dedicated medical area or area capable of supporting medical activities depends on the number of crewmembers, mission duration, crew activities, and the likelihood that multiple crewmembers may become injured or ill enough to require simultaneous medical attention.]

Downloaded from http://www.everyspec.com

7.5.3 Medical Equipment Usability

[V2 7045] Medical equipment **shall** be usable by non-physician crewmembers in the event that a physician crewmember is not present or is the one who requires medical treatment.

[Rationale: Medical equipment is to be simple and easy to use and require minimal training so that non-medical personnel can administer care to ill or injured crewmembers.]

7.5.4 Medical Treatment Restraints

[V2 7046] The capability **shall** exist to position and restrain a patient, care provider, and equipment during treatment.

[Rationale: Patient restraints are to be capable of preventing the motion of arms and legs, allow stabilization of the head, neck, and spine, and provide attachment to the spacecraft. Care provider restraints are to allow the care provider to remain close to the patient to administer treatment but should be easily removable or allow movement to access nearby equipment. Equipment restraints are to be able to safely restrain large items such as medical kits, as well as individual items.]

7.5.5 Biological Waste Containment and Disposal

[V2 7047] Biological hazards, like blood and other bodily fluids, **shall** be contained and safely disposed to minimize contamination of other crewmembers.

[Rationale: If not properly contained, contents could damage equipment, injure crewmembers, and transmit disease. Biological waste, including suited feces/urine collection devices, vomit, and feminine hygiene products, can also cause injury and transmit disease.]

7.5.6 Medical Equipment Disposal

[V2 7048] Sharp items such as syringe needles **shall** be safely disposed to prevent inadvertent injury to other crewmembers.

[Rationale: The disposal of medical equipment is to be taken into consideration as part of the overall trash management plan. Medical equipment, depending on the type, e.g., sharp items, are to have special disposal methods to ensure that there is no injury to the crew, damage to equipment, or transmission of disease.]

7.5.7 Deceased Crew

[V2 7049] Each human spaceflight program **shall** provide the capability to handle deceased crewmembers.

Downloaded from http://www.everyspec.com

[Rationale: Despite screening, health care measures, and safety precautions, it is possible for crewmembers to die during a mission, particularly on extended duration missions. Problems that can threaten the health and safety of remaining crewmembers include loss of a team member, grief, mission delays, and contamination. Facilities and plans for handling deceased crewmembers that are socially, biologically, and physically acceptable are to be established during system development.]

7.6 Stowage

7.6.1 Provision

7.6.1.1 Stowage Provisions

[V2 7050] The system **shall** provide for the stowage of hardware and supplies, to include location, restraint, and protection for these items.

[Rationale: Some stowed items are removed from stowage, used, and then returned to the provided provisions/location. Other items are temporarily removed from stowage, relocated to another use location, and much later stowed.]

7.6.1.2 Personal Stowage

[V2 7051] The system **shall** provide a stowage location for personal items and clothing.

[Rationale: Stowage locations for personal items and clothing aids crew morale and well-being. When integrated with inventory management, labeling, and operational nomenclature, the stowing of and access to these personal items should be accomplished efficiently.]

7.6.1.3 Stowage Location

[V2 7052] All relocatable items, e.g., food, EVA suits, and spare parts, **shall** have a dedicated stowage location.

[Rationale: To maintain a high level of efficiency in crew operations, it is important to locate items within easy reach of their point of use or consumption. Although difficult to achieve completely, all efforts are to be made to provide stowage for items manifested and flown. An important consideration is the need to keep the translation pathways clear and protect the volume necessary for the crew to execute their tasks safely and efficiently. Stowage is not to hinder the access to any emergency equipment.]

7.6.1.4 Stowage Interference

[V2 7053] The system **shall** provide defined stowage locations that do not interfere with crew operations.

Downloaded from http://www.everyspec.com

[Rationale: Having defined stowage locations supports efficient operations and helps prevent the stowage system from interfering with operations such as translation and vehicle control. Care is to be taken when designing the stowage system so that clear translation can occur in the event of an emergency. To maintain a high level of efficiency in crew operations, it is important to locate items within easy reach of their point of consumption.]

7.6.1.5 Stowage Restraints

[V2 7054] The system **shall** provide the capability to restrain relocatable items during microgravity, transient accelerations, and vibrations.

[Rationale: Stowed items are to be restrained so that they are not free to move during vehicle motion, under the influence of internal air movement, or after inadvertent contact. These restraints assist in keeping the crew safe from items moving about and also assist in ensuring that stowed items remain where required during operations and crew tasks.]

7.6.2 Accessibility

7.6.2.1 Priority of Stowage Accessibility

[V2 7055] Stowage items **shall** be accessible in accordance with their use, with the easiest accessibility for mission-critical and most frequently used items.

[Rationale: Items should be stowed to promote efficient retrieval and operations.]

7.6.2.2 Stowage Operation without Tools

[V2 7056] Stowage containers and restraints **shall** be operable without the use of tools.

[Rationale: To maximize the use of crew time, the stowage system is to permit crew access and reconfiguration without the use of tools.]

7.6.2.3 Stowage Access while Suited

[V2 7057] Stowed items to be used when crewmembers are suited **shall** be accessible by a suited crewmember.

[Rationale: Stowage items need features that allow suited crew to access, open, close, or manipulate the items. This applies to normal as well as contingency operations.]

7.6.3 Identification System

[V2 7058] The stowage identification system **shall** be compatible with the inventory management system.

Downloaded from http://www.everyspec.com

[Rationale: Space Shuttle and ISS experience has shown that stowage management and identification–the knowledge of the quantity, location, and type of each supply–is crucial for mission planning and maintaining crew productivity. Quantity and location are not the only aspects of stowage identification. Stowage, labeling, inventory tracking, and operational nomenclature are also to be considered when developing an integrated system.]

7.7 Inventory Management System

7.7.1 Inventory Tracking

[V2 7059] The system **shall** provide an inventory management system to track the locations and quantities of items (including hazardous trash) throughout the mission.

[Rationale: Space Shuttle and ISS experience has shown that inventory management–the knowledge of the quantity and location of each type of supply–is crucial for mission planning and maintaining crew productivity. Quantity and location are not the only aspects of inventory tracking. Stowage, labeling, and operational nomenclature are also to be considered when developing an integrated system.]

7.7.2 Inventory Operations

[V2 7060] The system **shall** be designed to allow inventory management functions to be completed within the allotted schedule.

[Rationale: The inventory management system is to be efficient and the amount of time required by the crew to perform the functions of the system minimized. A flexible system allows for changes in stowage locations or quantities any time during missions. Lessons learned in past spaceflight have indicated that past inventory operations have exceeded the allocated time required to accomplish the tasks. This can interfere with other expected tasks.]

7.7.3 Nomenclature Consistency

[V2 7061] The nomenclature used to refer to the items tracked by the inventory management system **shall** be consistent with procedures and labels.

[Rationale: It is imperative that spaceflight operations personnel, including all ground controllers and crewmembers, communicate using common nomenclature that unambiguously and uniquely defines all hardware and software items. This nomenclature is also to be common among all operational products, including commands, procedures, displays, planning products, reference information, system handbooks, system briefs, mission rules, schematics, and payloads operations products.]

7.7.4 Unique Item Identification

[V2 7062] Items that need to be uniquely identified **shall** have a unique name.

Downloaded from http://www.everyspec.com

[Rationale: Unique names for inventory items assist in the location and clear identification of the items. This promotes efficiency and reduces the likelihood of mis-selection of items for tasks. This also assists to minimize training.]

7.7.5 Interchangeable Item Nomenclature

[V2 7063] Items within the inventory management system that are identical and interchangeable **shall** have identical nomenclature.

[Rationale: Names for inventory items assist in the location and clear identification of the items. This promotes efficiency and reduces the likelihood of mis-selection of items for tasks.]

7.8 Trash Management System

7.8.1 Provision

7.8.1.1 Trash Accommodation

[V2 7064] The system **shall** provide a trash management system to accommodate (stow, neutralize, and dispose) all expected wet and dry trash, including sharp items, harmful chemicals, and biological and radioactive waste.

[Rationale: If not properly contained, trash contents could damage equipment, injure crewmembers, and transmit disease. Different types of trash require specific types of wrapping and containment. The trash management plan identifies the types of trash to be generated during mission operations; such identification then guides the disposition of the trash. Flight crews as well as ground personnel are expected to manage trash.]

7.8.1.2 Trash Volume Allocation

[V2 7065] Trash stowage volumes **shall** be defined and allocated for each mission.

[Rationale: The trash plan defines the types and quantities of trash expected during mission operations. Trash buildup occurs, especially on missions where there is no expendable vehicle to carry away the trash. Dedicated trash stowage volumes and locations are needed and are to be coupled with appropriate packaging and containment.]

7.8.1.3 Trash Stowage Interference

[V2 7066] The system **shall** provide defined trash stowage that does not interfere with crew operations.

[Rationale: This requirement is intended to prevent the trash system from interfering with normal operations such as translation and vehicle control. Design requirements are to ensure

Downloaded from http://www.everyspec.com

that the trash system does not interfere with translation during emergency events. As well, in an effort to maintain a high level of efficiency in crew operations, it is important to locate trash receptacles within easy reach of their point of use.]

7.8.2 Trash Odor Control

[V2 7067] The trash management system **shall** provide odor control of trash.

[Rationale: Uncontrolled odors can have an adverse effect on crew performance and can exacerbate pre-existing symptoms of SAS.]

7.8.3 Trash Contamination Control

[V2 7068] The trash management system **shall** prevent the release of trash into the habitable environment.

[Rationale: Many components of trash act as nutrient sources for microorganisms that can quickly increase their concentrations. These microorganisms can include medically significant organisms, which could negatively impact crew health and performance.]

7.8.4 Labeling of Hazardous Waste

[V2 7069] Hazardous waste **shall** be labeled on the outermost containment barrier, and available as viewed from different sides of the container that the crew may regard it, to identify the hazard type and level contained (in accordance with JSC-26895).

[Rationale: It is important for safe handling purposes that the waste container label be marked accurately and completely. When multiple types of hazardous waste are accumulated in a single hazardous waste container, the outermost container label is to indicate the highest level of toxicity contained.]

7.9 Sleep

7.9.1 Sleep Accommodation

[V2 7070] The system **shall** provide volume, restraint, accommodations, environmental control (e.g., vibration, lighting, noise, and temperature), and degree of privacy for sleep for each crewmember, to support crew health and performance.

[Rationale: The sleep accommodation requirements depend primarily on the gravity environment and the mission duration. However, in microgravity environments, restraints are provided to secure blankets and maintain positioning, with a range from knees-to-chest to full-body stature. Evidence from short- and long-duration missions and other relevant isolated, confined, and extreme environments suggests that environmental factors such as noise, temperature, vibration, and light inhibit sleep and impact well-being in space. Individual crew

Downloaded from http://www.everyspec.com

preferences vary, so individual control of the sleep environment is necessary in order to ensure adequate sleep and maintain well-being during missions. Examples of sleep accommodations provided to each crewmember include clothing, bedding, ear plugs, light blockers, eye masks, etc. (See section 8.5, Restraints and Mobility Aids, in this NASA Technical Standard.)]

7.9.2 Behavioral Health Privacy

[V2 7071] For long duration missions (>30 days), individual privacy shall be provided to accommodate social retreat, in order to support crew health and performance.

[Rationale: Isolation, confinement, mission task demands, social density, and other associated aspects of spaceflight can lead to stress, which tends to increase with mission duration Privacy and, therefore, is a countermeasure needed to protect the behavioral health of the crew, particularly in spaceflight vehicles with a relatively smaller volume. Terrestrial literature has further shown that greater distance between workstations is associated with improved job performance relative to smaller distances and that increased privacy is related to decreased emotional exhaustion. Providing private accommodations for crew will allow for completion of tasks with reduced distractions, and will allow for crew to temporarily withdraw for emotional restoration. Tasks that require privacy, such as private medical or psychological conferences, will also need to be facilitated by accommodations for visual and auditory privacy.]

Deleted:

[V2 7072] Requirement deleted.**]**

7.9.3 Partial-g Sleeping

[V2 7073] The system **shall** provide for horizontal sleep surface areas for partial-g and 1-g environments.

[Rationale: The sleeping area volume is to accommodate crew body sizes in all gravity environments. Partial-g, i.e. lunar (1/6) and Mars (1/3) gravity, defines the orientation of the volume. Orientation and body support (e.g., cushioning) must be considered in partial-g environments.]

7.10 Clothing

7.10.1 Clothing Quantity

[V2 7074] Clean, durable clothing **shall** be provided in quantities sufficient to meet crew needs.

[Rationale: Requirements are to be based on acceptable definitions of "clean" and "durable." Requirements are then to include the number of days that an individual item of clothing can be worn before laundering or disposal and, for laundered clothing, the lifetime of the clothing item.]

Downloaded from http://www.everyspec.com

7.10.2 Exclusive Use

[V2 7075] Clothing **shall** be provided for each individual crewmember's exclusive use.

[Rationale: Requirements for exclusive clothing use are to include considerations for individual stowage areas, clothing identification (particularly if clothing is laundered), sizing, and individual preference accommodation.]

7.10.3 Safety and Comfort

[V2 7076] Clothing **shall** be comfortable in fit and composition and compatible with the environment, e.g., temperature and humidity, in which it will be worn.

[Rationale: Requirements for clothing types are to be based on anticipated crew activities (exercise, maintenance, lounging, work, etc.) and gravity environments, e.g., very loose clothing and shoes would be inappropriate in a microgravity environment. Layering of clothing may accommadate temperature and personal preferences. Clothing design is also dependent on the range of crew sizes as defined in the physical characteristics database. (See section 4.1.1, Data Sets [V2 4001], in this NASA Technical Standard.)]

7.10.4 Clothing Donning and Doffing

[V2 7077] Clothing **shall** be designed so that crewmembers can don or doff clothing without assistance from other crewmembers in normal as well as in emergency situations.

[Rationale: None required.]

[V2 7078] Requirement deleted.

7.11 Housekeeping

7.11.1 Accessibility for Cleaning

[V2 7079] Sufficient volume **shall** be provided to access areas that need to be cleaned.

[Rationale: The full size range of personnel with appropriate cleaning tools and equipment is to be able to access all areas for routine cleaning. Fixed equipment should not have to be unsecured and moved for routine cleaning. Inaccessible areas are to be closed off to prevent the accumulation of trash and dirt.]

7.11.2 Particulate Control

[V2 7080] The system **shall** be designed for access, inspection, and removal of particulates that can be present before launch or that can result from mission operations.

Downloaded from http://www.everyspec.com

[Rationale: Manufacture, assembly, or other operations in a terrestrial or partial-g environment may accumulate residue and debris. This residue may then contaminate the spacecraft during flight or reduced-gravity environments. System development specifications are to ensure that crews can access residue accumulations for removal.]

7.11.3 Surface Material Selection

[V2 7081] The system **shall** be designed with surface materials that do not promote the growth of microorganisms.

[Rationale: Program requirements are to be established so that unique and non-standard surface materials such as materials that retain moisture or restrict air movement are evaluated for this feature.]

7.11.4 Surface Material Cleaning

[V2 7082] The system **shall** contain surface materials that can be easily cleaned and sanitized using planned cleaning methods.

[Rationale: Program requirements are to be established so that surface materials such as highly textured materials are assessed for this feature.]

7.11.5 Cleaning Materials

[V2 7083] The system **shall** provide cleaning materials that are effective, safe for human use, and compatible with system water reclamation, air revitalization, and waste management systems.

[Rationale: Program requirements are to be established so that cleaning materials are assessed for these features. Effective cleaning materials leave a cleaned surface ready for use without the need for additional cleaning. For example, an effective window cleaning material leaves the window with no accumulation, streaking, or any other artifact that could interfere with the use of the window (photography or piloting tasks). On the other hand, cleaning material used on a dining table could be considered effective even with the presence of streaks or accumulation, as long as the surface is safe on which to prepare, serve, and consume food.]

7.12 Recreational Capabilities

[V2 7084] The system **shall** provide individual and team-oriented recreational capabilities for the crew to maintain behavioral and psychological health.

[Rationale: Appropriate recreational facilities depend on the nature and duration of the mission. Program development requirements are to provide time and resources for psychological

Downloaded from http://www.everyspec.com

assessment of crew needs. The system design is to include recreational facilities, materials, and operational accommodations identified in these assessments.]

8. ARCHITECTURE

Architecture is defined as the arrangement and configuration of the functional areas where the crew lives and works. This includes any items necessary for translation, restraints and mobility aids, hatches, windows, and lighting. For detailed requirements to accommodate the physical characteristics of the crew, see section 4, Physical Characteristics and Capabilities, in this NASA Technical Standard. Accommodations for the specific functions that occur within the architecture of the habitat are addressed in section 7, Habitability Functions, in this NASA Technical Standard. Environmental qualities of the architecture are in section 6, Natural and Induced Environments.

8.1 Volume

8.1.1 Volume Allocation

[V2 8001] The system **shall** provide the volume (operational envelope) and interior configuration necessary for the crew to perform all mission tasks, using necessary tools and equipment to meet mission goals and objectives and support human performance and behavioral health.

[Rationale: Adequate internal size, in terms of volume and surface area, are to be provided to ensure crewmembers can safely, efficiently, and effectively perform mission tasks, including work, sleep, eat, egress, ingress, maintenance, housekeeping, and other tasks necessary for a safe and successful mission. It is important to consider all types of volume–pressurized, habitable, and net habitable, in accordance with JSC-63557, Net Habitable Volume Verification Method, when determining the amount of volume that is necessary. Confinement, isolation, and stress that can accompany a space mission tend to increase with duration. This creates a psychological need for additional volume. Privacy becomes more important for crewmembers as mission durations become longer. When evaluating the net habitable volume and interior configuration needs of a system, careful consideration should be given to cultural attitudes with regard to the overall work space.]

8.1.2 Volume for Crewmember Accommodation

[V2 8002] The system **shall** provide the volume necessary to accommodate the expected number of crewmembers.

[Rationale: Volume needed by each crewmember's activity is to be increased to allow for the interaction of the crewmembers and for safe ingress/egress to the worksite. The designer is to be careful not to assume that volume for any particular activity is not encumbered by the presence of other crewmembers. The interaction of planned activities throughout the mission is to be addressed for its activity volume and location within the spacecraft. Activities that infringe upon

Downloaded from http://www.everyspec.com

the volume of other crewmembers are to be avoided by scheduling or through design of the work volume size and configuration.]

8.1.3 Volume for Mission Accommodation

[V2 8003] The system **shall** provide the volume necessary to accommodate the number of mission and contingency days.

[Rationale: Increasing mission duration requires expansion in the physical volume to accommodate mission tasks and personal needs. The total required net habitable volume (NHV) per crewmember and per total crew complement increases with duration, particularly if the mission is not able to be logistically resupplied. Mission and volume designers are to carefully analyze volume needs of the crew, crew equipment, storage, and trash containment volumes to ensure they are adequately sized to provide adequate NHV for the crew to effectively and efficiently perform mission objectives.]

Deleted:

[V2 8004] Requirement deleted.

8.2 Configuration

8.2.1 Spatial Configuration

8.2.1.1 Functional Arrangement

[V2 8005] Habitability functions **shall** be located based on the use of common equipment, interferences, and the sequence and compatibility of operations.

[Rationale: Design for any system, function, or activity is to be based on the logical sequence and smooth flow of activities that are to occur. Generally, the most efficient layout is to place functions adjacent to each other when they are used sequentially or in close coordination. There are some limitations to this general rule, however. Adjacent positions are not to degrade any of the activities within the stations, nor is the positioning to degrade any of the activities in surrounding stations. General adjacency considerations, beyond simple activity flow, include transition frequency, sequential dependency, support equipment commonality, physical interference, traffic interference, privacy, confidentiality, noise output and sensitivity, lighting, vibration, simultaneous use or adjacent use by multiple crewmembers, and contamination.]

8.2.1.2 Interference

[V2 8006] The system **shall** separate functional areas whose functions would detrimentally interfere with each other.

Downloaded from http://www.everyspec.com

[Rationale: Co-location of unrelated activities can degrade operations, resulting in increased workload and operational delays. This consideration will be difficult to meet in a small volume, but every effort is to be made to separate functions and capabilities that could operationally conflict with each other or that produce environmental conditions that conflict with other tasks, e.g., glare, noise, vibrations, heat, odor.]

8.2.2 Orientation

8.2.2.1 Spatial Orientation

[V2 8007] Interface elements within a crew station **shall** be consistent in spatial orientation.

[Rationale: Whenever possible, a consistent directional orientation is to be established for the entire spacecraft. In a 1-g or partial-g environment, orientation is not a particular problem. Down is the direction in which gravity acts, and the human is normally required to work with feet down and head up. In a microgravity environment, the human working position is arbitrary. There is no gravity cue that defines up or down. In microgravity, orientation is defined primarily through visual cues, which are under the control of the system designer. Several orientation factors to be considered when designing for a microgravity environment include work surfaces, training and testing, disorientation, visual orientation cues, and equipment operation.]

8.2.2.2 Consistent Orientation

[V2 8008] In microgravity, the system **shall** establish a local vertical orientation.

[Rationale: In microgravity, orientation is defined primarily through visual cues, which are under the control of the system designer. The orientation within a particular crew station is referred to as a local vertical. Several orientation factors to be considered when designing a microgravity environment include work surfaces, training and testing, disorientation, visual orientation cues, and equipment operation.]

8.2.2.3 Interface Orientation

[V2 8009] Interface elements within a crew station **shall** have the same orientation in roll as the sagittal plane of the crewmember's head.

[Rationale: Maintaining a consistent orientation of interfaces and their elements minimizes crewmember rotational realignments needed to perform tasks that have directionally dependent components such as reading labels and displays. Inconsistent and varied display and control orientations may contribute to operational delays and errors. Given the complexity of some operations, e.g., piloting, a single orientation for all controls, displays, and labels may not be possible; but every effort is to be made in design to minimize crewmember repositioning required to efficiently perform a task. This requirement is meant to ensure that all equipment at an interface is aligned with the crewmember's head, even if the head is turned, so that an operating

Downloaded from http://www.everyspec.com

crewmember only needs to adjust body orientation slightly in pitch and yaw at a workstation but does not need to adjust body orientation in roll.]

8.2.3 Location and Orientation Aids

8.2.3.1 Location Identifiers

[V2 8010] A standard location coding system **shall** be provided to uniquely identify each predefined location within the system.

[Rationale: Location coding provides a clear method of referring to different locations within the vehicle and serves as a communication and SA tool when traversing the vehicle or unstowing/stowing equipment. An example of Shuttle location coding is the numbering of middeck lockers: locker MF28H is located on the middeck (M), forward (F) surface, 28% of the way to the right of the total width of the surface, and 122 cm (48 in) from the top of the surface. (H indicates eight alphabetic increments of 15.2 cm (6 in) from the top.)]

8.2.3.2 Location Aids

[V2 8011] The system **shall** provide aids to assist crewmembers in locating items or places within the system and orienting themselves in relation to those items or places.

[Rationale: Crewmembers need visual cues to help them quickly adjust their orientation to a local vertical position. When adjacent workstations have vertical orientations differing by 45 degrees or greater, visual demarcations need to be provided to prevent inadvertent use of the adjacent workstation elements.]

8.2.3.3 Visual Distinctions

[V2 8012] The system **shall** provide visual distinctions for adjacent but functionally separate workstations.

[Rationale: Crewmembers need easy-to-read visual cues to help them quickly adjust their orientation to a normal position. These visual cues are to define a horizontal or vertical reference plane. When adjacent workstations have vertical orientations differing by 45 degrees or greater, visual demarcations are to prevent inadvertent use of other workstation elements.]

8.3 Translation Paths

8.3.1 Internal Translation Paths

[V2 8013] The system **shall** provide intravehicular activity (IVA) translation paths to allow for the movement of crew and equipment within the time constraints of both nominal operational, contingency, and emergency conditions.

Downloaded from http://www.everyspec.com

[Rationale: Translation paths are needed to support the safe and efficient movement of the crew and equipment throughout the vehicle. The pathway design is to take into account the type and level of activity that occur at each of the workstations, the required movement of crew and equipment between them, the location of workstations, the number of crew, and the types of equipment being translated. As an example, lessons learned from the ISS indicate that translation paths around the ISS eating area have disrupted crew rest and relaxation required during meals.]

8.3.2 Emergency Translation Paths

[V2 8014] The spacecraft (excluding spacesuits) **shall** be configured such that the crew can ingress or egress (including hatch operation, if applicable) within the time required to preserve crew health and safety in the event of an emergency.

[Rationale: System developers need to define emergency escape routes early in the design process to ensure they are functional. The routes need to be free of obstructions (snags, protrusions, stowed items, etc.), clearly marked, illuminated for emergency operations, and require a minimal number of operations for passage (such as awkward turns or hatch operations). When considering time required, account for the entire route the crew would need to take to get to safety as well as time to access and carry necessary equipment. When sizing the route, designers need to consider the dimensions of the users, including suits and special protective/survival equipment, and the number of concurrent users, including possible rescue personnel.]

8.3.3 Ingress, Egress, and Escape Translation Paths

[V2 8015] The system **shall** provide translation paths for ingress, egress, and escape of suited crewmembers.

[Rationale: Suited crewmembers are to be able to get in and out of the vehicle on the ground or transfer between two docked vehicles in flight easily and quickly.]

8.3.4 Translation Path Interference

[V2 8016] Translation paths **shall** allow movement of crew and equipment without interfering with crew activities.

[Rationale: Traffic flow is not to interfere with other unrelated operational and recreational activities of the crew. These activities may include sensitive spacecraft control, routine servicing, experimentation, eating, sleep, and relaxation.]

8.3.5 Simultaneous Use

[V2 8017] Where appropriate, the translation path size **shall** accommodate simultaneous use by crewmembers.

Downloaded from http://www.everyspec.com

[Rationale: Given the limited volume of spacecraft, movement of crewmembers simultaneously can be expected. The crew may be suited or unsuited, pressurized or unpressurized. Simultaneous use can occur in both nominal and emergency situations. The number of crew and the expected tasks to be performed are to be considered to size the translation pathway.]

8.3.6 Hazard Avoidance

[V2 8018] Translation paths **shall** be designed to prevent exposure to hazards.

[Rationale: Translation pathways are to be clear of protrusions and minimize the possibility of entanglement of translating crewmembers or equipment with loose objects such as restraints, cables, hoses, or wires. Intersecting translation paths with heavy traffic flow are to minimize collisions so that damage does not occur to nearby equipment.]

8.3.7 Path Visibility

[V2 8019] Emergency paths **shall** be marked and be visible under nominal operational, contingency, and emergency conditions.

[Rationale: The possibility exists for a spacecraft or subsystem failure or damage that could require evacuation, thus impacting the design for traffic flow. Crewmembers are to be provided with escape routes for egress and isolation in the event of the need for an emergency egress from their immediate location. Entry and exit pathways are to be protected; the pathways are to be free from obstruction and without dead-end corridors and marked to establish the safe and efficient movement of the crew and equipment.]

8.3.8 Crew Egress Translation Path - Ground

[V2 8020] The system **shall** provide a translation path for assisted ground egress of an incapacitated suited or unsuited crewmember.

[Rationale: Incapacitated crewmembers, suited or unsuited, may be unable to egress the vehicle on their own and may also be in a constrained position that requires assisted extraction, including pre-flight and post-landing. An egress translation path is to accommodate the crewmember being assisted, the assisting personnel, and any necessary equipment, e.g., medical equipment.]

8.3.9 Crew Ingress/Egress Translation Path in Space

[V2 8021] The system **shall** provide an in-space translation path for assisted ingress and egress of an incapacitated suited or unsuited crewmember.

[Rationale: Incapacitated, pressurized-suited crewmembers may be unable to ingress the vehicle or spacecraft on their own and may also be in a constrained position that requires

Downloaded from http://www.everyspec.com

assistance. This may include ingress from EVA or ingress/egress to/from the spacecraft from EVA or any vehicle or module to which the spacecraft is docked. A crewmember in a pressurized suit is the bounding case. This requirement also includes assisted ingress and egress for crewmembers in unpressurized suits, as well as unsuited crew.]

8.3.10 Translation Paths for Suited Crewmembers

[V2 11002] The expected translation paths **shall** be large enough to accommodate a suited crewmember and the motions necessary for translation.

[Rationale: Translation paths support the safe and efficient movement of the crew. Suited crewmembers are to be able to get in and out of the vehicle on the ground or transfer between two docked vehicles in flight easily and quickly. Incapacitated pressurized-suited crewmembers may be unable to ingress on their own and may also be in a constrained position that requires assistance. This may include ingress from EVA or ingress/egress from EVA or docked vehicles. "Crewmember in a pressurized suit" is the bounding case.]

8.3.11 EVA Translation Path Hazard Avoidance

[V2 11005] EVA translation paths **shall** prevent exposure to hazards.

[Rationale: Safety is paramount for all EVA tasks. When translation paths and mobility aids are properly provided, they can reduce the hazards associated with colliding with hardware, intruding into keep-out zones, or contacting contaminated surfaces. Without predefined translation paths and carefully located mobility aids, items or equipment not intended as mobility aids can be damaged from induced loads, such as grabbing, pushing, and pulling.]

8.4 Hatches and Doorways

8.4.1 Operability

8.4.1.1 Hatch Cover and Door Operation without Tools

[V2 8022] Hatch covers and doors **shall** be unlatched and opened and latched and closed without the use of tools from either side by a single suited crewmember.

[Rationale: Hatch operation includes unlatching/opening or latching/closing the hatch. Lost or damaged tools prevent the hatches from being opened or closed, which may result in loss of crew (LOC) or loss of mission (LOM). Ground operation of flight vehicle hatches and suited crew operation of hatches in the ground safe haven following emergency pad egress are not to require the use of tools.]

8.4.1.2 Unlatching Hatch Covers

[V2 8023] Hatch covers **shall** require two distinct and sequential operations to unlatch.

Downloaded from http://www.everyspec.com

[Rationale: Inadvertent hatch opening and subsequent cabin depressurization would be catastrophic. Requiring two separate, distinct operations helps to ensure that the hatch will not be unlatched through accidental contact.]

8.4.1.3 Hatch Cover and Door Operating Times

[V2 8024] For nominal operations, hatch covers and doors **shall** be operable by a single crewmember in no more than 60 seconds, from both sides of the hatch.

[Rationale: Hatch operation includes unlatching/opening or latching/closing the hatch. Excessively long operating times can delay crews on both sides of a hatch, which would prevent ingress or egress. The hatch operating requirement of 60 seconds is based on engineering judgment related to easily operable hatch design without complicating hatch design and includes time for a deconditioned crewmember to operate hatch. This does not preclude a program from implementing more strict design requirements. For emergency hatch operating time, see section 8.3.2, Emergency Translation Paths [V2 8014], in this NASA Technical Standard.]

8.4.1.4 Hatch Cover and Door Operating Force

[V2 8025] The forces required to operate each crew interface for the hatch covers and doors **shall** be within the crewmember strength defined by section 4.1.1, Data Sets [V2 4001] for the worst-case pressure differential and anticipated encumbering equipment and clothing.

[Rationale: All crewmembers are to be able to operate hatches and their covers and doors. Designing operating forces to the strength of the weakest crewmember ensures the crew can perform activities related to safety and to LOM. Determination of anticipated worst-case parameters can be made through a detailed task analysis.]

8.4.1.5 Hatch Cover and Door Gravity Operations

[V2 8026] Hatch covers and doors **shall** be operable in all expected gravity conditions and orientations to which they are exposed.

[Rationale: Hatches and doors are critical to the safety of the crew and vehicle, not only for maintenance of the pressure environment but also for the ability to isolate interior portions of the spacecraft if necessary. Whether designed for a vehicle that operates in microgravity or on a planetary surface, hatches and doors are to be operable in the anticipated environment by any crewmember.]

Downloaded from http://www.everyspec.com

8.4.2 Hatch and Doorway Design

8.4.2.1 Hatch Size and Shape

[V2 8027] Hatches and doorways **shall** be sized and shaped to accommodate all planned translations based on task analysis, including unrestricted passage of a suited crewmember and crewmembers carrying cargo or equipment.

[Rationale: A pressurized-suited crewmember represents a situation where the crewmember's size is enlarged in many dimensions by virtue of the suit. Should a situation arise where the crewmember needs to move through hatches and doorways while suited, especially in an emergency situation, the hatches and doorways are to be large enough for the crewmember to pass safely and efficiently. Planned tasks include all nominal and planned contingency tasks. Also, reconfiguration of a spacecraft may require crewmembers to transport potentially large pieces of equipment across hatches and doorways. Hatch size should also consider the capability for a rescuing crewmember to be able to transport an incapacitated crewmember without being hampered by inadequate hatch or doorway sizes. Hatches and doorways may be designed to accommodate translation of robotic agents, but they must still accommodate crewmembers and their equipment.]

8.4.2.2 Pressure Equalization across the Hatch

[V2 8028] Each side of each hatch **shall** have manual pressure equalization capability with its opposite side, achievable from that side of the pressure hatch by a suited or unsuited crewmember.

[Rationale: Air pressure is to be equalized on either side of a hatch to safely open the hatch. In some vehicle failure scenarios, non-manual methods for pressure equalization may fail. Manual pressure equalization enables hatch opening regardless of vehicle status.]

8.4.2.3 Visibility across the Hatch

[V2 8029] The system **shall** provide a window for direct, non-electronic visual observation of the environment on the opposite side of the hatch.

[Rationale: Direct visual observation of the environment on the opposite side of a hatch allows the crew to determine the conditions or obstructions, such as the presence of fire or debris, on the other side of the hatch for safety purposes. Windows do not have the failure modes associated with cameras and display systems that may not be operable during emergencies when most needed.]

Downloaded from http://www.everyspec.com

8.4.3 Hatch Cover and Door Design

8.4.3.1 Hatch Cover and Door Interference

[V2 8030] When opened, hatch covers and doors **shall** allow for unrestricted flow of traffic.

[Rationale: Open hatches and doors are not to protrude into translation space and inhibit the safe and effective movement of both the crewmembers and any equipment they need to move from one location to another. In addition, open hatch covers and doors are to allow for a clear emergency translation pathway.]

8.4.3.2 Hatch Cover Closure and Latching Status Indication

[V2 8031] The pressure hatch covers **shall** indicate closure and latching status on both sides of the hatch.

[Rationale: Indication of hatch closure and latch status on both sides of the hatch allows both ground personnel (launch pad) and crewmembers to verify that each hatch is closed and latched. By providing both closure and latch position status, proper security of the hatch can be verified. Hatch closure implies that the hatch is in proper position to be latched.]

8.4.3.3 Hatch Cover Pressure Indication

[V2 8032] Pressure hatch covers **shall** indicate, on both sides of the hatch, pressure differential across the hatch.

[Rationale: Indication of pressure difference on both sides of the hatch allows both ground personnel and crewmembers to see the changes in pressure across the hatch and to know when the pressure difference is low enough to safely open the hatch. Use of numerical values, color, or other cues can be used to indicate when it is safe to operate a hatch.]

8.5 Restraints and Mobility Aids

8.5.1 Crew Restraint Provision

[V2 8033] Crew restraints **shall** be provided to assist in the maintaining of body position and location in reduced gravity conditions or during high accelerations.

[Rationale: Maintaining a static position and orientation at a workstation is necessary to ensure that controls can be activated without motion being imparted to the crewmember. Without gravity to hold an individual onto a standing or sitting surface, the body floats or moves in the opposite direction of an applied force. The cognitive and physical work required to maintain body position during a task can interfere with the task performance. Activities that use both hands are not to require handholds to maintain position at a workstation but may require

Downloaded from http://www.everyspec.com

restraints such as foot loops, straps, or harnesses. Restraints/orientation of equipment utilized during crew tasks also need to be considered when designing crew restraints.]

8.5.2 Crew Restraint Design

[V2 8034] Crew restraints **shall** be designed to accommodate the crewmember for the duration of the task.

[Rationale: Crew restraints provide for operator stability. Where it is critical that a workstation operator remain stable for task performance, e.g., view through an eyepiece, operate a keyboard, or repair a circuit, foot restraints and other ad hoc positioning techniques may be sufficient. However, tasks that require a stabilized crewmember to maintain position for long periods of time, e.g., 1 hour of continuous use or longer, require a restraining system designed with task duration, stability, and training to operate in mind.]

8.5.3 Crew Restraint Posture Accommodation

[V2 8035] Crew restraints for microgravity applications **shall** be compatible with the neutral body posture.

[Rationale: The neutral body posture in microgravity places the human in a position unlike the vertical nature of 1-g. Most notable are changes in the angle of the foot, arm, and shoulder elevation, the forward and down head tilt, and hip/knee flexion displacing the torso backward. Crewmembers will fatigue and experience discomfort if equipment does not accommodate the neutral body posture. This can then lead to decreased performance and task execution.]

8.5.4 Crew Restraint Interference

[V2 8036] Crew restraints **shall** not interfere with crewmembers' performance of tasks.

[Rationale: Some simple tasks can be easily performed with one hand while using the other hand for stability. More complex tasks, however, require coordination of both hands; and some type of body or foot restraint system may be required.]

8.5.5 Crew Restraints for Controls Operation

[V2 8037] Crew restraints **shall** provide for the operation of controls during reduced gravity, as well as during dynamic or multi-axis accelerations.

[Rationale: Maintaining a position and orientation during controls operation is necessary to ensure that controls can be activated without motion being imparted to the crewmember. Restraints are meant to support and stabilize the crewmember and protect against inadvertent operation of controls.]

Downloaded from http://www.everyspec.com

8.5.6 Mobility Aid Standardization

[V2 8038] Mobility aids **shall** be standardized, clearly distinguishable, and located to aid the crew in starting or stopping movement, changing direction or speed, or translating equipment.

[Rationale: Mobility aids such as hand holds and foot restraints allow crewmembers to efficiently move from one location to another in microgravity, as well as reduce the likelihood of inadvertent collision into hardware that may cause damage to the vehicle or injury to the crew. Without predefined mobility aids, personnel may use available equipment that may be damaged from induced loads. By standardization of the mobility aids, reduction in crew training can occur, and the aids can be easily identified when translating inside or outside the spacecraft. Commonality among visual cues is important so that crews can easily distinguish intended mobility aids from non-mobility aids that may be damaged by the application of crew-induced loads. During emergencies, crews need to be able to quickly discern mobility aids from the surrounding structures. Visual cues such as color coding may aid in this function.]

8.5.7 Mobility Aid Structural Strength

[V2 8039] All fixed and portable IVA mobility aids **shall** be designed to withstand expected forces of the crew without failure or sustaining damage.

[Rationale: The tasks expected of a spaceflight crew are varied; and mobility aids are to support crewmember translation, as well as the translation of equipment or other crew, suited or unsuited, pressurized or unpressurized. Mobility aids assist in the stabilization of the crew, as well as stopping, starting, or changing of direction.]

8.5.8 Mobility Aid for Assisted Ingress and Egress

[V2 8040] Mobility aids **shall** be provided for the assisted ingress and egress of suited or unsuited crewmembers.

[Rationale: Crewmembers needing assistance (including suited crew, in either pressurized or unpressurized suits, or unsuited crew) may be unable to ingress or egress spacecraft and may also be in a constrained position that requires assistance from another person. Moving the crew may include ingress from EVA or ingress/egress to/from another spacecraft from EVA or any vehicle or module to which a spacecraft is docked. Assisting crew may need mobility aids not only for translating but also for stabilization during the translation of the incapacitated crewmember. Note that the term "mobility aids" is not intended to indicate a specific design solution; rather, the intent is to ensure that physical design of vehicles accommodate operations such as those described here. Mobility aids may refer to specially designed hardware (e.g., handholds) or the use of existing features of the system for mobility (e.g., a handle on a hatch), in which case additional testing and verification may be required.]

Downloaded from http://www.everyspec.com

8.5.9 Unassisted Ingress, Egress, and Escape Mobility Aids

[V2 8041] Mobility aids **shall** be provided for ingress, egress, and escape of crewmembers without assistance from other crew or ground personnel.

[Rationale: In off-nominal situations the crew may need to ingress, egress, or escape unassisted while suited or unsuited. Because a suited crewmember has limited maneuverability, mobility aids allow a more safe and efficient ingress and egress of the vehicle and escape from the pad. Note that the term "mobility aids" is not intended to indicate a specific design solution; rather, the intent is to ensure that physical design of vehicles accommodate operations such as those described here. Mobility aids may refer to specially designed hardware (e.g., handholds) or the use of existing features of the system for mobility (e.g., a handle on a hatch), in which case additional testing and verification may be required.]

8.5.10 IVA Operations Mobility Aids

[V2 8042] Where appropriate, mobility aids **shall** be provided for the crew to conduct IVA operations.

[Rationale: Mobility aids such as hand holds and foot restraints allow crewmembers to efficiently move from one location to another in microgravity, as well as reduce the likelihood of inadvertent collision into hardware that may cause damage to the vehicle or injury to the crew. Early experience in the Skylab program showed the problems of movement in microgravity. Stopping, starting, and changing direction all require forces that are best generated by the hands or feet. Appropriately located mobility aids make this possible. Mobility aids are to be designed to accommodate a pressurized-suited crewmember by providing clearance, non-slip surfaces, and noncircular cross sections. Without predefined mobility aids, personnel may use available equipment that may be damaged from induced loads.]

8.5.11 Mobility Aid Provision for Suited Operations

[V2 11003] Mobility aids **shall** be provided along expected translation paths of suited crewmembers at an interval that accommodates the suited crewmember's reach.

[Rationale: Mobility aids such as hand holds allow crewmembers to efficiently move from one location to another in microgravity, as well as reduce the likelihood of inadvertent collision into hardware that may cause damage to the vehicle or injury to the crew. Without predefined mobility aids, personnel may use available equipment that may be damaged from induced loads. Because of the limited maneuverability of a suited crewmember, mobility aids are required to allow crewmembers to safely and efficiently ingress and egress the vehicle. Mobility aids designed to support pressure-suited operations are to accommodate crewmembers by providing clearance, non-slip surfaces, and non-circular handrail cross sections, and reach in between the mobility aids.]

Downloaded from http://www.everyspec.com

8.5.12 Restraints for Suited Operations – Provision

[V2 11012] Restraints **shall** be placed to ensure the optimum reach and work envelope of the suited crewmember and be adjustable to maximize the work envelope.

[Rationale: Suited crewmembers are not to have to reposition themselves each time they manually operate and view the vehicle's user interfaces. All vehicle seats and restraints are to be adjustable to accommodate the crewmember's ranges of motion. Crew interfaces and controls with which the suited crew interacts are to be located such that they can be reached from the restrained positions within the range of motion of the crewmember. Suits can limit the crew range of motion below the range of motion of the unsuited. Suit pressurization can further reduce the range of motion.]

8.6 Windows

Windows are an integral part of many aspects of spaceflight operations with respect to their location, optical properties, fields of view, and protection. The minimum critical design parameters for windows to support these operations and tasks are size, color balance, haze, transmittance, wavefront quality, reflectance, material inclusions, surface defects, ambient illumination, visual obstructions, e.g., mounting for optical hardware and cameras, internal and external contamination, the position of windows on the spacecraft, and the distance, position, and orientation of the user relative to a window.

8.6.1 Provision

8.6.1.1 Window Provisioning

[V2 8043] The system **shall** provide at least one window on all spacecraft that enables fields of view to support planned crew tasks.

[Rationale: Windows provide direct, non-electronic, through-the-hull viewing and are essential to mission safety and success, as well as to maintaining crew psychological and physical health and safety. They support crew photography (a primary on-and-off duty activity of onboard crews), provide situational awareness of the external environment, facilitate piloting and robotic operations, and permit safe viewing through hatches. Windows also permit stellar navigation, vehicle anomaly detection and inspection, and environmental and scientific observations. Windows do not have the failure modes associated with cameras and display systems that may not be operable during emergencies when most needed.]

8.6.1.2 Window Optical Properties

[V2 8045] System windows **shall** have optical properties commensurate with their tasking in accordance with JSC-66320, Optical Property Requirements for Glasses, Ceramics, and Plastics in Spacecraft Window Systems.

Downloaded from http://www.everyspec.com

[Rationale: System windows are required to have the optical properties necessary to prevent degradation of visual acuity and optical performance. JSC-66320 specifies optical properties for different types of system windows according to their associated tasks (the uses to which they will be put). These optical properties provide system windows with the minimal optical performance necessary to support those tasks and permit the retrieval of imagery through windows so that the retrieved images are not blurred, degraded, or distorted.]

8.6.1.3 Window Obstruction

[V2 8046] Window fields of view **shall** not be obstructed or obscured in any way except for: 1) hardware designed and intended to protect and cover windows; 2) hardware used in conjunction with piloting (i.e., Head's Up Display (HUD), Crew Optical Alignment System (COAS), or other similar equipment); 3) the outer mold line and hull structure of the vehicle, other windows and window mullions; and, 4) instrumentation applied within 13 mm (0.5 in) of the perimeter of the viewing area.

[Rationale: Fixed equipment such as window instrumentation, hardware, or a condensation prevention system that would obscure the field of view from the normal crew position for window viewing may interfere with crew tasks requiring a window.]

8.6.2 Light Blocking

8.6.2.1 Window Light Blocking

[V2 8049] Each system window **shall** be equipped with an opaque shade or shutter that prevents external light from entering the crew compartment, such that the interior light level can be reduced to 2 lux at 0.5 m (20 in) from each window.

[Rationale: External illumination can interfere with internal spacecraft operations such as crew sleep and onboard still and motion imaging, particularly if the illumination causes glare. Shades and shutters block external illumination from entering the habitable compartments through windows.]

8.6.2.2 Window Accessory Replacement/Operation without Tools

[V2 8050] System window accessories designed for routine use **shall** be removable and replaceable or operable from fully closed to open and vice versa by one crewmember without the use of tools.

[Rationale: System window accessories such as window covers, shades, and filters should be designed to be easily installed and removed using their attachment features without additional tools. The ability to remove, open, replace or close window accessories efficiently ensures proper use of the hardware and appropriate protection for the windows and the crew.]

Downloaded from http://www.everyspec.com

8.7 Lighting

8.7.1 Illumination Levels

[V2 8051] The system **shall** provide illumination levels to support the range of expected crew tasks.

[Rationale: A wide range of crew tasks is expected to be performed within the vehicle. The required lighting levels vary, depending on the task being performed. For instance, cabin reconfiguration after orbit insertion may require simultaneous reading of labels and checklists, crew translation, mechanical assembly, and manual control at a variety of vehicle locations, each of which requires sufficient lighting without blockage from crew and equipment in transit. Similarly, rendezvous and proximity operations may require general cabin darkening for out-the-window viewing but sufficient lighting for crew translation and manual control. A single type of lighting at a single illumination level is insufficient to support all tasks; therefore, both general and task illumination are necessary.]

8.7.2 Exterior Lighting

[V2 8052] The system **shall** provide exterior lighting to aid the crew in assembly, maintenance, navigation, rendezvous and docking, ingress and egress, EVA operations, and external task operations.

[Rationale: External operations are performed on a routine basis, especially when vehicles are located on planetary surfaces. The types of operations vary greatly, from supporting the crew in conducting assembly and maintenance and in the locating of the vehicles and habitats to general wayfinding and navigation, to surface geology and other science. Lighting types and illumination levels appropriate to the expected tasks are necessary to accomplish mission objectives. Planetary surface illumination and reflection are to be addressed; these vary, depending on the planetary body selected for the mission, as well as the location on that planetary body.]

8.7.3 Emergency Lighting

[V2 8053] The system **shall** provide emergency lighting for crew egress and/or operational recovery in the event of a general power failure.

[Rationale: Emergency lighting is a part of the overall lighting system for all vehicles. It allows for crew egress and/or operational recovery in the event of a general power failure. The emergency lighting system is to be automatically activated to allow operators and other occupants of a vehicle to move to a safe location and allow efficient transit between any inhabited location and designated safe haven(s). Efficient transit includes appropriate orientation with respect to doorways and hatches, as well as obstacle avoidance along the egress path.]

Downloaded from http://www.everyspec.com

Deleted:

[V2 8054] Requirement deleted.

8.7.4 Lighting Chromaticity

[V2 8059] Interior and exterior lighting intended for operational environments requiring human/camera color vision **shall** have a chromaticity that falls within the chromaticity gamut for white light for the Correlated Color Temperature (CCT) range of 2700 K to 6500 K as defined by ANSI C78-377, Specifications for the Chromaticity of Solid State Lighting Products.

*[Rationale: The ability to make variable customized lighting spectra adds risk that an implementer will come up with a light that meets some color constraints but fails to create an environment that appears white or will create one in which cameras have trouble operating. ANSI C78-377 (see NEMA C78.377) forces the definition of white to be a color gamut along the blackbody locus of the International Commission on Illumination (CIE) 1931 chromaticity chart. For variable CCT systems, it is important that humans and camera***s** *within that environment see color correctly and interpret the light as white light anywhere along the color range of white light as defined by ANSI C78-377. Exceptions to this requirement include conditions that do not require color vision such as window operations and sleep environment, as determined by a task analysis.]*

8.7.5 Lighting Color Accuracy

[V2 8060] Interior and exterior lighting intended for human operational environments requiring photopic vision accuracy **shall** have a score of 90 ± 10 on a color fidelity metric that is appropriate for the utilized lighting technology, as designated by the Color Fidelity Metric (Rf) defined by IES TM-30 methodology.

[Rationale: Accurate representation of the colored environment impacts several areas of concern for human performance and behavior, including critical color matching tasks (e.g., matching litmus strips to cue cards) and the representation of skin tone and biological material (e.g., for health diagnostics). Rapid advancements in modern lighting technology such as solid-state lighting require careful consideration of the proper color fidelity metric selection for the evaluation of color rendition properties of a light source. Color Rendering Index (CIE CRI Ra) is the first established color fidelity metric: it is widely used but it is an improper metric for sources below CCT of 5000 K as well as sources with peaked spectra such as solid-state technology. Color Quality Scale (CQS) improves upon the methodology of CRI to more accurately describe color hue and saturation shifts. For a complete suite of color rendition metrics, the IES TM-30 method is recommended. TM-30 provides a color fidelity metric (Rf) that is analogous to CRI Ra but more accurate, a color gamut index (Rg) to describe color saturation, and a color vector graphic for visualization of hue and saturation changes with respect to a reference source. IES TM-30 has an extensive toolset for evaluation of the ability of a lamp to properly rendered colored materials within an environment. This toolset is advanced from the Color Quality Scale and provides a means to evaluate the performance of a lighting

Downloaded from http://www.everyspec.com

system with any material, given its spectral reflectance, allowing for tailoring for program-specific critical colored surfaces. It is highly recommended that this tool be included in any lighting performance specification. Situations to which this requirement applies should be determined by a task analysis.]

8.7.6 Circadian Entrainment

[V2 8055] During waking hours, lighting systems **shall** provide the crew with retinal light exposure that is sufficient in intensity, optimal in wavelength, and implemented at the proper times and durations to entrain the human circadian pacemaker to a 24-hour day and facilitate schedule shifting.

[Rationale: Terrestrial studies demonstrate that light serves as the strongest external stimulus for maintaining our biological clock. Lighting systems are to provide the proper light for circadian entrainment to address disruptions in the sleep/wake cycles of space flight crews and maintain health and performance. Lighting systems for vehicles supporting long duration (greater than 30 days) missions need to provide white light composed of at least three different configurations of correlated color temperature and intensity: one for general purpose illumination, one for pre-sleep, and another to facilitate alertness and schedule shifting. These settings should be implemented at specific times relative to the day-night cycle, as demonstrated in the HIDH. Short duration vehicles should, at a minimum, ensure that white light in sleeping areas do no harm by providing a dimmable general illumination setting that minimizes short-wavelength light to mitigate against inadvertently suppressing melatonin during the biological night; peripheral light sources that are enriched in short wavelength light, however, should then be made available for use as needed.

8.7.7 Lighting Controls

[V2 8056] Lighting systems **shall** have on-off controls.

[Rationale: Controls for turning lighting on and off within each module allow crewmembers to see the effect of changes to lighting controls without changing their location. Easy access to the controls is necessary. Light sources are to be capable of being turned completely off and returned to on. This control allows for the execution of operations that require observation through windows or photography and for crew functions such as sleep.]

8.7.8 Lighting Adjustability

[V2 8057] Interior lights **shall** be adjustable (dimmable) from their maximum output level to their minimum luminance.

[Rationale: Interior lighting is to be adjustable to permit the crew to use out-the-window views when there is little external light, for example, during rendezvous, and to allow the selection of lower light levels when crewmembers are resting.]

Downloaded from http://www.everyspec.com

8.7.9 Glare Prevention

[V2 8058] Both direct and indirect glare that causes discomfort to humans or impairs their vision **shall** be prevented.

[Rationale: Eye discomfort can occur and visual performance can be negatively affected by glare. If a light source within the observer's field of view provides much more luminance than its surroundings (higher range of contrast) and occupies a significant portion of the field of view, it may act as a direct glare source. If the reflection of a light source from a surface within the field of view provides an area whose luminance greatly exceeds that of its surroundings, it may act as a reflected (indirect) glare source. The types of tasks expected to be performed are to be considered, as well as the location where the tasks occur, whether they are internal or external to the vehicle, and whether they are on or off a planetary surface. Glare should first be eliminated though proper consideration and arrangement of the spacecraft internal system architectural environment, including the lighting system, window design, architectural surface treatments and backlit displays. In situations where this perfect arrangement is not possible, mitigating measures such as lighting source baffles, window shades, and computer monitor glare shields can be used.]

9. HARDWARE AND EQUIPMENT

This section provides requirements applicable to the design of hardware and equipment. Requirements in this section apply to all hardware and equipment with which the crew interfaces—from large and complex systems such as ISS racks, to small items such as tools, drawers, closures, restraints, mobility aids, fasteners, connectors, clothing, and crew personal equipment. Hazard minimization is accomplished through hardware design, and design of interior components which crew may encounter, through nominal mission activities, including maintenance operations, and anticipated off-nominal events

9.1 Standardization

9.1.1 Crew Interface Commonality

[V2 9001] Hardware and equipment performing similar functions **shall** have commonality of crew interfaces.

[Rationale: The intent of this requirement is to ensure commonality and consistency within a given human spaceflight program. This facilitates learning and minimizes crew error.]

9.1.2 Differentiation

[V2 9002] Hardware and equipment that have the same or similar form but different functions **shall** be readily identifiable, distinguishable, and not be physically interchangeable.

Downloaded from http://www.everyspec.com

[Rationale: The intent of this requirement is to avoid potential confusion crewmembers may experience that can lead to errors when items with similar form are not readily identifiable or physically distinguishable.]

9.1.3 Routine Operation

[V2 9003] Interactions with and operation of systems, hardware, and equipment used during routine/nominal operations **shall** not consume an inordinate amount of time such that it disrupts tasks and discourages crew performance of tasks.

[Rationale: Good design of systems and equipment can reduce the amount of time to perform many routine tasks, i.e., food preparation, maintenance, and inventory management. Having to retrieve, use, and stow tools for the routine/nominal operation of systems, hardware, and equipment can be especially cumbersome and burdensome for routine tasks. The ability to perform operations with alacrity helps ensure proper use.]

9.2 Training Minimization

[V2 9004] Hardware and equipment that crew interact with **shall** minimize the time required for training.

[Rationale: Generally, designers can minimize training by following requirements dictated in this NASA Technical Standard under section 9.1, Standardization, and section 10, Crew Interfaces. However, a specific system may have characteristics that could minimize training requirements. For example, an upgrade in technology of an existing system could maintain the same interface. This could be defined in system requirements and would minimize the need for additional training.]

9.3 Hazard Minimization

9.3.1 Mechanical Hazard Minimization

9.3.1.1 Mechanical Hazard

[V2 9005] Systems, hardware, and equipment **shall** protect the crew from moving parts that may cause injury to the crew.

[Rationale: Known mechanical hazard sources can be defined in a requirement. Consistently moving equipment is easy to identify and guard. Infrequent or unpredictable movement may be a less obvious hazard. If possible, system requirements are to identify potential sources of unpredictable or infrequent movement and spell out specific guarding requirements for these systems.]

Downloaded from http://www.everyspec.com

9.3.1.2 Entrapment

[V2 9006] Systems, hardware, and equipment **shall** protect the crew from entrapment (tangles, snags, catches, etc.).

[Rationale: This applies to items with which the crew will come into direct contact. Entrapment can occur in places where loose cables or equipment items block passageways or where crewmembers purposely fasten motion restraints (seat belts and shoulder harnesses, foot restraints, tethers, etc.). Entrapment can also occur from protrusions or openings that snag body parts or personal equipment. For example, if holes are small, then fingers may be entrapped. Larger holes, on the other hand, allow free movement. Crewmembers are likely to be under time-critical conditions when they need to evacuate or return to safety. If possible, requirements are to focus on those situations.]

9.3.1.3 Potential Energy

[V2 9007] Hardware and equipment **shall** not release stored potential energy in a manner that causes injury to the crew.

[Rationale: Requirements are to identify all known sources of stored potential energy. As with all hazards, this can be mitigated by designing out the hazard, the use of safety devices, providing warnings, or through procedures and training. These mitigations are arranged in descending order of preference: designing out the hazard is the most preferred, and relying on procedures or training is the least preferred.]

9.3.1.4 Protection from Projectiles and Structural Collapse

[V2 9008] Hardware mounting and habitat enclosures **shall** be configured such that the crew is protected from projectiles and structural collapse in the event of sudden changes in acceleration or collisions.

[Rationale: Chances for crew survivability in otherwise catastrophic conditions can be greatly increased by attention (early in the design process) to structure and mounting designs such that the crew habitable volume remains intact and free of secondary projectiles.]

9.3.1.5 Sharp Corners and Edges - Fixed

[V2 9009] Corners and edges of fixed and handheld equipment to which the bare skin of the crew could be exposed **shall** be rounded as specified in Table 16, Corners and Edges.

[Rationale: Sharp corners and edges in passageways, maintenance areas, stowage compartments, or workstations present hazardous conditions and are to be avoided. Also, hand-held items such as tools present a hazard to the crew. In addition to potential hazards from IVA exposure, EVA exposure to sharp surfaces could damage suit integrity. This requirement applies to bare skin. Gloves and clothing may protect skin; however, some clothing or equipment items

Downloaded from http://www.everyspec.com

may be more vulnerable to tears and cuts; separate requirements need to be established for those items. The crew may be exposed to items manufactured by a variety of companies, and this requirement is to be reflected in requirements for all of them.]

Table 16—Corners and Edges

Material Thickness (t)	Minimum Corner Radius	Minimum Edge Radius	Figure
t > 25 mm (t > 1 in)	13 mm (0.5 in (spherical))	3.0 mm (0.120 in)	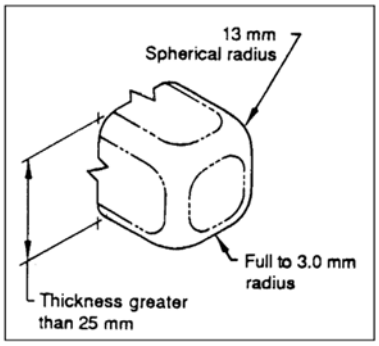
6.5 mm < t ≤ 25 mm (0.25 in < t ≤ 1 in)	13 mm (0.5 in)	3.0 mm (0.125 in)	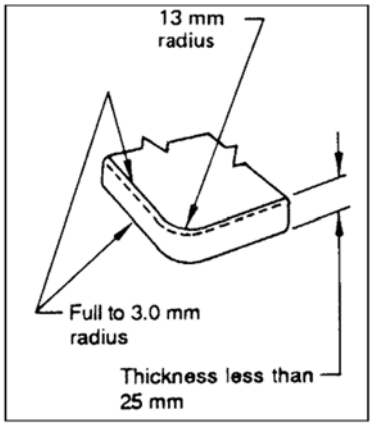
3.0 mm < t ≤ 6.5 mm (0.125 in < t ≤ 0.25 in)	6.5 mm (0.26 in)	1.5 mm (0.06 in)	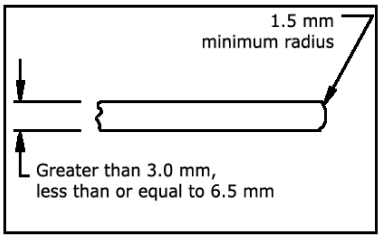
0.5 mm < t ≤ 3.0 mm (0.02 in < t ≤ 0.125 in)	6.5 mm (0.26 in)	Full radius	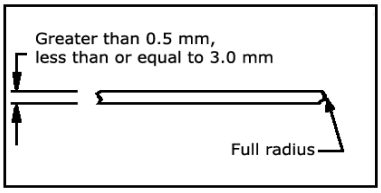

Downloaded from http://www.everyspec.com

Material Thickness (t)	Minimum Corner Radius	Minimum Edge Radius	Figure
t < 0.5 mm (t < 0.02 in)	6.5 mm (0.26 in)	Rolled, curled, or covered to 3.0 mm (0.120 in)	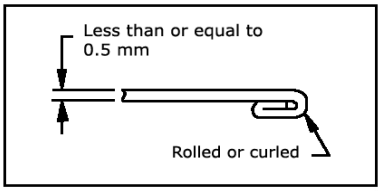

9.3.1.6 Protection from Functionally Sharp Items

[V2 9010] Functionally sharp items **shall** be prevented from causing injury to the crew or damage to equipment when not in use.

[Rationale: Functionally sharp items are those that, by their function, do not meet the requirement for exposed corners and edges, e.g., syringes, scissors, and knives. These items are to be prevented from causing harm when not in nominal use. Capping sharp items is one way of doing this.]

9.3.1.7 Sharp Corners and Edges - Loose

[V2 9011] Corners and edges of loose equipment to which the crew could be exposed **shall** be rounded to radii no less than those given in Table 17, Loose Equipment Corners and Edges.

[Rationale: The force (and resulting damage) in contact with fixed items depends on the mass and speed of the crewmember. The damage from loose items, however, depends on the weight of the item. For example, a person running into a fixed clipboard will cause more damage than if the clipboard were thrown at that person. Therefore, the corners and edges of a loose item do not have to be as rounded as a fixed item. Although hand-held items are loose, they are squeezed, and forces can be high. Therefore, hand-held items are to meet the edge and corner rounding requirements of fixed items (section 9.3.1.5, Sharp Corners and Edges–Fixed [V2 9009] in this NASA Technical Standard).]

Table 17—Loose Equipment Corners and Edges

Equipment Mass		Minimum	Minimum
At Least (kg (lb))	Less Than (kg (lb))	Edge Radius (mm (in))	Corner Radius (mm (in))
0.0 (0.0)	0.25 (0.6)	0.3 (0.01)	0.5 (0.02)
0.25 (0.6)	0.5 (1.1)	0.8 (0.03)	1.5 (0.06)
0.5 (1.1)	3.0 (6.6)	1.5 (0.06)	3.5 (0.14)
3.0 (6.6)	15.0 (33.1)	3.5 (0.14)	7.0 (0.3)
15.0 (33.1)	--	3.5 (0.14)	13.0 (0.5)

9.3.1.8 Burrs

[V2 9012] Exposed surfaces **shall** be free of burrs.

Downloaded from http://www.everyspec.com

[Rationale: Burrs are manufacturing artifacts or can occur during a mission as a result of maintenance or assembly operations. Burrs cause damage to equipment and skin. They are to be removed as a part of the manufacturing process; or, if it is likely that they will be created during a mission, a means is to be provided to eliminate crew exposure to the burrs.]

9.3.1.9 Pinch Points

[V2 9013] Pinch points **shall** be covered or otherwise prevented from causing injury to the crew.

[Rationale: Pinch points can cause injury to the crew but may exist for the nominal function of equipment, i.e., equipment panels. This may be avoided by locating pinch points out of the reach of the crew or by providing guards to eliminate the potential to cause injury.]

9.3.1.10 High-Temperature Exposure

[V2 9014] Any surface to which the bare skin of the crew is exposed **shall** not cause epidermis/dermis interface temperature to exceed the pain threshold limit of 44 °C (111.2 °F).

[Rationale: Research by Greene, L.C., et al. (1958) on human tolerance to heat pain showed that the pain threshold is reached at 43.7 °C (110.6 °F) skin temperature. Lloyd-Smith, D.L., and Mendelssohn, K. (1948) found the pain threshold to be 44.6 °C (112.3 °F). Defrin, et al. (2006) investigated heat pain threshold across the body and found the lowest level in the chest (42 °C (107.6 °F)), the highest in the foot (44.5 °C (112.1 °F)), and in the hand 43.8 °C (110.8 °F). In a study by Moritz, and Henriques. (1947), 44 °C (111.2 °F) was the lowest temperature at which significant epidermal damage occurred, after exposure was sustained for 6 hours. As the contact temperature increased above 44 °C (111.2 °F), the time to damage was shortened by approximately 50% for each 1 °C (1.8 °F) rise in temperature up to about 51 °C (123.8 °F). Increasing contact pressure was not sufficient to increase the risk of thermal injury. At contact skin temperatures above 70 °C (158 °F), it took less than 1 second to produce complete epidermal cell death. Pain threshold, rather than damage threshold, should be used to (a) preclude skin damage and (b) prevent a startle pain reaction, i.e., pulling a hand away quickly, which may cause injury from flailing.]

9.3.1.11 Low-Temperature Exposure

[V2 9015] Any surface to which the bare skin of the crew is exposed **shall** not cause skin temperature to drop below the pain threshold limit of 10 ºC (50 °F).

[Rationale: Studies on the thermal performance of spacesuit gloves have shown that pain from cold occurring at hand skin temperatures of 10 ºC (50 °F) was deemed tolerable (JSC-39116, EMU Phase VI Glove Thermal Vacuum Test and Analysis Final Report; Bue, 2009). Previous research on human tolerance to cold has shown that numbness occurs at 7 ºC (44.6 °F) skin temperature (Provins and Morton, 1960) and risk of frostbite at 0 ºC (32 °F) (Havenith, G., et al. (1992)). Pain threshold, rather than damage threshold, should be used

Downloaded from http://www.everyspec.com

to (a) preclude skin damage and (b) prevent a startle pain reaction, i.e., pulling a hand away quickly, which may cause injury from flailing. In addition, staying above the numbness threshold is important, both because numbness can mask skin damage, which may impact flight safety, and also to allow normal touch sensation for tasks after contact with cold objects.]

9.3.1.12 Equipment Handling

[V2 9016] All items designed to be carried or removed and replaced **shall** have a means for grasping, handling, and carrying (and, where appropriate, by a gloved hand).

[Rationale: Grasping, gripping, and moving hardware using hardware features that are not intended to be handles can damage the hardware or slip away and injure the crewmember or damage surrounding hardware. This can be prevented by designing obvious features that are intended for grasping, gripping, or moving the item.]

9.3.2 Electrical Shock Hazard Minimization

9.3.2.1 Power Interruption

[V2 9017] The system **shall** provide the crew with capability to control the power to an electrical circuit.

[Rationale: This assumes that, at some point in a mission, all circuits could require crew contact with exposed conductors. There is to be a way for the crew to eliminate this exposure. At the least, it could interfere with task performance; and, at the most, it could cause serious injury or death.]

9.3.2.2 Energized Status

[V2 9018] The system **shall** provide and display the de-energized status (interruption of electrical power) of a circuit to the crew and within their fields of regard.

[Rationale: When de-energizing a system, the user should always be provided with feedback that confirms the function has occurred. Because of the critical nature of this information, the complexity of some circuits, and the possibility of a false indication, many times circuit status is verified using a separate tool such as an electromagnetic sensor.]

9.3.2.3 Nominal Physiological Electrical Current Limits

[V2 9019] Under nominal situations (routine human contacts to hardware), the program **shall** limit crew exposure to $\leq$ 0.4 mA for direct current (DC) and $\leq$ 0.2 mA for alternating current (AC).

[Rationale: These values are below the physiological effect of sensation for the most sensitive members of the astronaut population. This requirement is intended to address typical exposure

Downloaded from http://www.everyspec.com

situations where human contact can routinely occur with conductive housing of electrical equipment and in these situations no perceptible current flow is the design requirement. Typically NASA engineering teams establish 1 MΩ isolation along with grounding to conductive surfaces with Class H or better bond to prevent current flow through crew members.]

9.3.2.3.1 Catastrophic Physiological Electrical Current Limits

The following two requirements set the physiological electrical current limits used in hazard analysis (for all circumstances [V2 9020] and specifically for unique circumstances where startle reaction may cause a catastrophic event [V2 9021]) for determining hazard severity, failure tolerance and controls of a system that could pose a catastrophic electrical shock to the human. These thresholds are used when a hazard analysis is considering failure scenarios and off nominal events where failures such as electrical short circuits have compromised system isolation and pose a risk of catastrophic electrical shock to the human.

9.3.2.3.1.1 Catastrophic Physiological Electrical Current Limits for all Circumstances

[V2 9020] Any hazard analysis that determines a crew exposure to ≥ 40mA for direct current (DC) and ≥ 8 mA for alternating current (AC) **shall** be considered catastrophic to the human.

Notes: AC limit is for 50/60 Hz. If different frequencies are required refer to IEC 60479-2, Figure 2. For different waveshapes and AC/DC combinations refer to IEC60479-2 limits. For voltage spikes of short duration (< 1 second) refer to IEC60479-5 for limits (Figure 5, curve c1 for AC and Figure 14, curve c1 for DC).

[Rationale: The IEC is the leading global organization that prepares and publishes international standards for all electrical, electronic, and related technologies. The current values were chosen based on the threshold for maintaining muscle control if shocked to protect 99.5% of the population (IEC TR 60479-2, Figure 7). This NASA Technical Standard is intended to provide the threshold where additional engineering controls will be required to mitigate electrical shock/physiological effects to the human.]

9.3.2.3.1.2 Catastrophic Physiological Electrical Current Limits for Startle Reaction

[V2 9021] For unique situations where a startle reaction is deemed potentially detrimental (such as during manual control of a spacecraft or during an EVA), any hazard analysis that determines a crew exposure to > 2 mA for DC and > 0.5 mA for AC **shall** be considered catastrophic to the human.

Note: AC voltage is for 50/60 Hz. If different frequencies are required refer to IEC 60479-2, Figure 2. For different waveshapes and AC/DC combinations refer to IEC60479-2 limits.

[Rationale: The IEC is the leading global organization that prepares and publishes international standards for all electrical, electronic, and related technologies. The current values were chosen based on the threshold for a startle reaction if shocked (IEC TR 60479-5, Table 1). Under certain circumstances such as startle reaction, more restrictive thresholds than

Downloaded from http://www.everyspec.com

the physiological catastrophic limits of the 9.3.2.x.2 limits above may be employed in hazard and risk assessments. Consider the terrestrial examples of involuntary reaction and let go thresholds. For a person at rest in a chair not performing a critical task, these exposures are not catastrophic. However, consider an electrician on a ladder or the pilot of an aircraft where split second involuntary reactions can have dire consequences where the threshold of safety should be set lower at the startle reaction electrical current values. The application of these lower thresholds would be case by case in unique circumstances where it's deemed appropriate.

9.3.2.3.2 Body Impedance for Voltage Calculations Utilizing Electrical Current Thresholds

[V2 9022] The program shall use the 5th percentile values for the appropriate conditions (wet/dry, AC/DC, voltage level, large/small contact area) from IEC TR6049-1 to determine the appropriate body impedance to calculate the voltage associated with any current limit analysis.

[Rationale: The IEC is the leading global organization that prepares and publishes international standards for all electrical, electronic, and related technologies. For example 850 Ω *represents the 5th percentile of the population for a touch voltage of 125 volts and a large contact area (such as full hand or a surface area of 82 cm^2) in saltwater-wet conditions (IEC TR 60479-1, Table 3).*

9.3.2.4 Leakage Currents – Equipment Designed for Human Contact

[V2 9023] For equipment that is specifically designed to contact the human body, electrical leakage currents caused by contact with exposed surfaces **shall** be kept below the levels specified in Table 18, Leakage Currents–Equipment Designed for Human Contact.

[Rationale: Some equipment needs to pass small amounts of current through the body to accomplish its intended function, e.g., bias currents in medical monitoring equipment. The amount of current allowed depends on the frequency and whether the part of the equipment contacting the crewmember is isolated from the power source. Examples of isolated equipment are intra-aortic catheters and electrocardiogram (ECG) monitors. Examples of non-isolated equipment are blood pressure cuffs and digital thermometers. These levels of leakage current are consistent with those in IEC 60601-1, Medical Electrical Equipment–Part 1: General Requirements for Basic Safety and Essential Performance, for patient auxiliary and patient leakage currents in isolated (type CF) and non-isolated (types B and BF) equipment. These leakage currents are measured across parts applied to the crewmember and also from the applied parts to ground. The summation of all the currents should be compared to the current limits in Table 18.]

Downloaded from http://www.everyspec.com

Table 18—Leakage Currents – Equipment Designed for Human Contact

Maximum Current (mA RMS)				
Body Contact	**Frequency**	**Operating Condition**	**Equipment Type**	
			Isolated Equipment	**Non-Isolated Equipment**
External*	dc to 1 kHz	Normal	0.1	
		Single Fault	0.5	
	>1 kHz	Normal	Lesser of (0.1 x frequency in kHz) or 5	
		Single Fault	Lesser of (0.5 x frequency in kHz) or 5	
Internal	dc to 1 kHz	Normal	0.01	Not Allowed
		Single Fault	0.05	
	>1 kHz	Normal	Lesser of (0.01 x frequency in kHz) or 1	
		Single Fault	Lesser of (0.05 x frequency in kHz) or 1	
*For dc, there is a small risk of heating and tissue necrosis for prolonged duration of contact.				

9.3.3 Fluid and Gas Spill Hazard Minimization

9.3.3.1 Fluid/Gas Release

[V2 9024] Hardware and equipment **shall** not release stored fluids or gases in a manner that causes injury to the crew.

[Rationale: Crew injuries are likely to be caused by either highly pressurized fluids and gases or toxic fluids and gases. In both cases, design requirements are to be developed so that the crew is protected during both storage and handling of these fluids and gases.]

9.3.3.2 Fluid/Gas Isolation

[V2 9025] The system **shall** provide for the isolation or shutoff of fluids and gases in hardware and equipment.

[Rationale: Gases and fluids are most likely to be temporarily shut off at service and maintenance points. System developers are to identify those points and create isolation capabilities. Without dedicated isolation controls, crews could create bypasses, which waste crew time and possibly damage systems. Also, to save time and reduce the possibilities of error,

Downloaded from http://www.everyspec.com

e.g., forgetting to shut them off or to turn them back on when maintenance is complete, the shut-off valves are to be located near those service points.]

9.3.3.3 Fluid/Gas Containment

[V2 9026] The system **shall** provide for containment and disposition of fluids and gases that might be released.

[Rationale: Excess gases and fluids are likely to be released during draining and filling of systems. Designs are to accommodate these possibilities to ensure capture, containment, and disposal that is safe and effective. Capture facilities are to be located near the points where release is likely to occur (maintenance or service points).]

9.4 Durability

9.4.1 Protection

[V2 9027] Systems, hardware, and equipment **shall** be protected from and be capable of withstanding forces imposed intentionally or unintentionally by the crew.

[Rationale: Unintentional damage can occur if items are in a location where crew is focused on other activities such as translation, moving equipment, or maintaining other systems. Designers are to identify areas of crew activity and decide if exposed hardware and equipment are sufficiently durable for unintended forces. Such hardware and equipment may have to be relocated, guarded, covered, e.g., with close-out panels, or simply designed to be more durable. "Intentional" damage may result from crewmembers securing or tightening items (latches, retainers, bolts, screws, etc.) using forces beyond their design limits. This often occurs under panic conditions. Hardware designers are to use crew strength data and to assume the crew could apply their maximum strength forces.]

9.4.2 Isolation of Crew from Spacecraft Equipment

[V2 9028] Protective provisions, e.g., close-out panels, **shall** be provided to isolate and separate equipment from the crew within the habitable volume.

[Rationale: Protective provisions such as closeout panels serve the following functions: provide protection from forces in accordance with section 9.4.1, Protection [V2 9027], in this NASA Technical Standard; provide fire abatement protection and isolation and support of fire extinguishing operations; protect crew from ignition sources and sharp edges and retain debris from coming out into habitable volume; protect equipment from ground or flight crew operations; provide acoustic barrier for noise generated behind panels; minimize snag potential; and prevent loose items or equipment from becoming lost. In addition, protective provisions are designed to provide a smooth surface, faired-in with the adjacent crew compartment structure, and be compatible with crew passageway requirements.]

Downloaded from http://www.everyspec.com

9.5 Assembly and Disassembly

9.5.1 Hardware and Equipment Mounting and Installation

[V2 9029] System hardware and equipment **shall** be designed so that it cannot be mounted or installed improperly.

[Rationale: Ideally, similar items are interchangeable. The preferred method of preventing improper installation and mating is a design that prevents it such as misaligned mounting holes, pins, or keys. The designs to prevent installation and mating errors are to be rugged enough to withstand persistent attempts. Cues (such as color or labeling) can be provided to remind crewmembers so they save the time of trying to make improper installations. However, these cues are not to be the sole countermeasure to improper installation and mating.]

9.5.2 Mating and Demating

9.5.2.1 Connector Spacing

[V2 9030] The spacing between connectors **shall** permit mating and demating by crewmembers wearing expected clothing.

[Rationale: Adequate access and working space allows personnel to efficiently access equipment in a way that allows nominal and off-nominal tasks to be performed. Access to connectors may be required during equipment assembly, reconfiguration, or maintenance. Access and work envelopes are different for differing tasks. In particular, protective garments, e.g., spacesuits, may be required by the flight crew and are to be accommodated.]

9.5.2.2 Connector Actuation without Tools

[V2 9031] Connectors **shall** be operable without tools for mating and demating.

[Rationale: Connector actuation includes mating/connecting and demating/disconnecting of a connection. Lost or damaged tools prevent connectors from being connected or disconnected, which may result in LOC or LOM.]

9.5.2.3 Incorrect Mating, Demating Prevention

[V2 9032] Cable, gas and fluid lines, and electrical umbilical connectors **shall** prevent potential mismating and damage associated with mating or demating tasks.

[Rationale: Ideally, similar items are interchangeable. The preferred method of preventing improper installation and mating is a design that prevents it such as misaligned mounting holes, pins, or keys. The designs to prevent installation and mating errors are to be rugged enough to withstand persistent attempts. Cues (such as color or labeling) can be provided to remind

Downloaded from http://www.everyspec.com

crewmembers so they save the time of trying to make improper installations. However, these cues are not to be the sole countermeasure to improper installation and mating.]

9.5.2.4 Mating, Demating Hazards

[V2 9033] The system **shall** not subject personnel and equipment to hazards, including spills, electrical shocks, and the release of stored energy, during mating or demating.

[Rationale: Maintenance or service tasks are not likely to be familiar, and thus crews may be more focused on these tasks. Hazards that would normally be identified and avoided may go unnoticed during maintenance. Design requirements and solutions are to identify hazards that are exposed during maintenance activities and determine ways to eliminate these hazards or protect the crew from them.]

9.6 Cable Management

9.6.1 Cable Management

[V2 9034] The system **shall** manage cable, wire, and hose location, protection, routing, and retention to prevent physical interference with crew operations and safety.

[Rationale: Designers are to define areas of activity and route fixed lines and cables so that they are both protected and also do not interfere with these activities. Also, system designers are to focus on non-fixed lines and cables that may be unstowed or moved for a specific task or temporary rearrangement. While the rerouted cable or line may accommodate a specific need, the routing path may interfere with other, non-related activities. Designers are to identify potential uses for lines and cables and ensure the start points, end points, and cable and line routes in between accommodate all crew activities.]

9.6.2 Cable Identification

[V2 9035] All maintainable cables, wires, and hoses **shall** be uniquely identified.

[Rationale: Some conductors do not terminate in a keyed connector; they are individually attached. It is essential that the conductors be attached to the correct terminal points. All individual conductors that attach to different terminal points are to be coded. Terminal points are normally fixed and can be identified with labels and illustrations. Conductors, on the other hand, are to have identifications affixed to them. This is normally done with color coding of the insulation materials or by tagging the conductors.]

Downloaded from http://www.everyspec.com

9.7 Design for Maintainability

9.7.1 General

9.7.1.1 Design for Maintenance

[V2 9036] The system **shall** provide the means necessary for the crew to safely and efficiently perform routine service, maintenance, and anticipated unscheduled maintenance activities.

[Rationale: Maintenance and servicing are not directly related to mission goals. Reduction in the time devoted to maintenance and servicing can mean more crew time devoted to achieving mission goals. Also, because of the complexity of space missions and the interdependency of many factors (equipment, supplies, weather, solar flares, political considerations, etc.), designs are to minimize reliance on outside maintenance support. Designs are to provide the tools, parts, supplies, training, and documentation necessary for crews to maintain efficient and safe operations.]

9.7.1.2 Commercial Off-the-Shelf Equipment Maintenance

[V2 9037] Maintenance for commercial off-the-shelf equipment **shall** be suitable to the spaceflight environment.

[Rationale: Systems designed for terrestrial environments may be adapted for space missions. This adaptation is to include procedures and features that will allow maintenance tasks to be performed safely and effectively in a space mission environment. Major changes that likely need accommodation are differences in gravity or crewmembers wearing gloves.]

9.7.1.3 In-Flight Tool Set

[V2 9038] Each program **shall** establish a set of in-flight tools necessary to maintain or reconfigure the spaceflight system.

[Rationale: Tool set design is to be based partly on reducing the demands on the crew: selecting tools that are likely to be familiar to crewmembers and minimizing the number of different tools. Also, tools are to be usable by the full range of crew sizes and strengths wearing any protective equipment (EVA suits, protective eyewear, gloves, etc.).]

9.7.2 Maintenance Efficiency

9.7.2.1 Maintenance Time

[V2 9039] Planned maintenance for systems and associated hardware and equipment **shall** be capable of being performed within the allotted crew schedule.

Downloaded from http://www.everyspec.com

[Rationale: Maintenance and servicing are directly related to the amount of time available for mission goals. Reduction in the time devoted to maintenance and servicing means more crew time devoted to achieving mission goals. Also, because of the complexity of space missions and the interdependency of many factors (equipment, supplies, weather, solar flares, political considerations, etc.), designs are to minimize reliance on outside maintenance support. Designs are to provide the tools, parts, supplies, training, and documentation necessary for crews to maintain efficient and safe operations.]

9.7.2.2 Minimizing Maintenance

[V2 9040] All systems and equipment **shall** be designed to reduce the need for maintenance.

[Rationale: Maintenance and servicing are directly related to mission goals. Reduction in the time devoted to maintenance and servicing means more crew time devoted to achieving mission goals. Also, because of the complexity of space missions and the interdependency of many factors (equipment, supplies, weather, solar flares, political considerations, etc.), designs are to minimize reliance on outside maintenance support. Designs are to provide the tools, parts, supplies, training, and documentation necessary for crews to maintain efficient and safe operations.]

9.7.2.3 Equipment Modularity

[V2 9041] Where possible, equipment **shall** be replaceable as modular units.

[Rationale: Modular units can reduce maintenance times by eliminating removal, replacement, and checkout of individual components. Modular units may also reduce training times.]

9.7.2.4 Captive Fasteners

[V2 9042] Fasteners used by the crew during maintenance **shall** be captive.

[Rationale: Fasteners can be lost either by loosening during normal use or by becoming misplaced during maintenance operations. Space missions are generally isolated, and replacement parts are not available. This is particularly important in zero gravity environments because small items such as fasteners can be very difficult to find.]

9.7.2.5 Minimum Number of Fasteners - Item

[V2 9043] For items that may be serviceable by the crew, the number of fasteners used **shall** be the minimum required to meet structural engineering design practices.

[Rationale: Designers can add a safety factor to some configurations by increasing the number of fasteners. However, when crews are to routinely remove the fasteners, selection of the number of fasteners is also to consider reduction of crew time devoted to maintenance activities.]

Downloaded from http://www.everyspec.com

9.7.2.6 Minimum Variety of Fasteners - System

[V2 9044] The system **shall** be serviceable with a common set of fasteners that meet structural engineering design practices.

[Rationale: Different fasteners require different tools and procedures for removal and replacement. Commonality of fasteners can reduce times to access and the need for different tools. It can also reduce training times necessary to introduce crews to the fastener types.]

9.7.3 Accessibility

9.7.3.1 Maintenance Item Location

[V2 9045] The system **shall** locate maintenance items so that the maintenance task does not require the removal or disabling of other systems or components.

[Rationale: Location of items depends on many factors (physical room, interface with other items, manufacturing considerations, etc.), and maintenance can be easily overlooked. It is important, therefore, that, early in a design, system developers identify those items that will require maintenance. Accessibility to those items then becomes a higher priority in selecting the location of these items.]

9.7.3.2 Check and Service Point Accessibility

[V2 9046] Check points and service points for systems, hardware, and equipment **shall** be directly accessible.

[Rationale: System designs are to support mission goals that do not normally devote crew time to maintenance tasks. Removal of items to access check and service points increases maintenance times. Also, complex and time-intensive maintenance procedures could discourage performance of scheduled tasks.]

9.7.3.3 Maintenance Accommodation

[V2 9047] Physical work access envelopes **shall** accommodate the crew, required tools, and any protective equipment needed to perform maintenance.

[Rationale: Maintenance tasks are to be defined and analyzed with worst-case assumptions. Volume is to be provided to allow the size extremes in the crewmembers performing the tasks using proper tools and protective equipment within the prescribed times.]

9.7.3.4 Visual Access for Maintenance

[V2 9048] Maintenance tasks that require visual feedback **shall** be directly visible during task performance.

Downloaded from http://www.everyspec.com

[Rationale: Efficient and safe performance of many maintenance tasks requires vision during task performance. In crowded spaces, hands and tools can block vision of the task. On those tasks that require vision during task performance (such as alignments or adjustments), designers are to locate and design equipment to provide this vision.]

9.7.3.5 Hand Clearance for Maintenance

[V2 9049] Clearance **shall** be provided for the crewmember to obtain hand access required for performing maintenance tasks, while wearing the most encumbering equipment and clothing anticipated.

[Rationale: Hand clearance for in-flight maintenance tasks is to be provided by the hardware developer to ensure that maintenance tasks can be performed. Determination of anticipated parameters can be made through a detailed task analysis.]

9.7.3.6 Tool Clearance

[V2 9050] The system **shall** provide tool clearances for tool installation and actuation for all tool interfaces during in-flight maintenance.

[Rationale: Tools to be used for in-flight maintenance are to be identified by the hardware developer, and clearance for application is to be accommodated to ensure that maintenance tasks can be performed.]

9.7.4 Failure Notification

9.7.4.1 Fault Detection

[V2 9051] The system **shall** provide rapid and positive fault detection and isolation of defective items.

[Rationale: Fault detection is a means to reduce crew time devoted to maintenance activities. Properly designed aids to fault detection and isolation can also reduce crew training requirements. Terminology, references, and graphics used are to be coordinated with other crew task demands so as to minimize additional training. Designers are to define systems that are likely to fail and then create features that help identify these failures when they occur. In addition to the fault detection and isolation capabilities, the crew is to be provided tools and supplies to maintain and repair the defective systems.]

9.7.4.2 Failure Notification

[V2 9052] The system **shall** alert the crew when critical equipment has failed or is not operating within tolerance limits.

Downloaded from http://www.everyspec.com

[Rationale: An alerting system allows crew to quickly surmise a system or component failure. Terminology, references, and graphics used are to be coordinated with other crew task demands so as to minimize additional training.]

9.8 Protective and Emergency Equipment

9.8.1 Protective Equipment

9.8.1.1 General

9.8.1.1.1 Protective Equipment

[V2 9053] Protective equipment **shall** be provided to protect the crew from expected hazards.

[Rationale: Analyses are to define anticipated hazards and appropriate protective equipment. Protective equipment might include gloves, respirators, goggles, and pressure suits. The equipment is to fit the full range of crewmembers. This might require adjustable gear or multiple sizes (with consideration of the number of crewmembers that may have to use the equipment at the same time.) Because the gear could be used under emergency conditions, it is to be located so that it is easily accessed and is to be simple to adjust and don.]

9.8.1.1.2 Protective Equipment Use

[V2 9054] Protective equipment **shall** not interfere with the crew's ability to conduct the nominal or contingency operations that the crew is expected to perform while employing the protective equipment, including communication among crewmembers and with ground personnel.

[Rationale: Analyses are to be performed of the situations and operations in which protective equipment is to be used. This analysis is to define the task demands and the requirements for protective equipment design. Task performance demands might include visibility, range of motion, dexterity, and ability to communicate.]

9.8.1.1.3 Protective Equipment Automation

[V2 9055] Automation of protective equipment **shall** be provided when the crew cannot perform assigned tasks.

[Rationale: The crew may need to perform tasks to activate protective equipment operation or to activate rescue aids. If these tasks are to be performed under emergency or stressful conditions (where the crewmember is distracted or disabled), then the tasks are to be automated. An example of an automatically activated protective system is the automatic parachute release device. The emergency locator transmitter in an airplane is an example of an automatically activated rescue system.]

Downloaded from http://www.everyspec.com

9.8.1.2 Hearing Protection

9.8.1.2.1 Use of Hearing Protection

[V2 9056] The system **shall** meet SPL limits of section 6.6.2, Acoustic Limits, in this NASA Technical Standard, except where otherwise specified in this NASA Technical Standard, without requiring the use of personal hearing protection.

[Rationale: Hearing protection normally operates by decreasing the level of sound at the ear (passive protection). Normal, long-term operations are to be conducted without the impairment to hearing from hearing protection. This would interfere with the ability to communicate and hear audio signals. In some situations (such as launch and reentry), however, noise levels may be uncontrollably high for relatively short periods. Facilities for communications and audio signals can be adapted so that they are possible in those situations. Requirements are to specify those periods allowing the use of hearing protection, and then designs are to accommodate effective crew functioning during that time.]

9.8.1.2.2 Hearing Protection Provision

[V2 9057] Appropriate personal hearing protection **shall** be provided to the crew during all mission phases for contingency or personal preference.

[Rationale: Crews are to have readily accessible hearing protection for unanticipated high noise levels. Hearing protection is also to be available to block noise according to individual preferences such as for concentration or for sleep.]

9.8.1.2.3 Hearing Protection Interference

[V2 9058] The system **shall** be designed so that hearing protection does not inhibit voice communication, monitoring of systems, and detection of alerts.

[Rationale: Some conditions might temporarily expose the crew to high noise levels. Facilities for communications and audio signals can be adapted so that they are possible in those situations. Requirements are to specify those periods allowing the use of hearing protection, and then designs are to accommodate effective crew functioning during that time.]

9.8.2 Fire Protection System

9.8.2.1 Fire Detecting, Warning, and Extinguishing

[V2 9059] A fire protection system comprised of detecting, warning, and extinguishing devices **shall** be provided to all spacecraft volumes during all mission phases without creating a hazardous environment.

Downloaded from http://www.everyspec.com

[Rationale: Fire protection is to be based on the anticipated nature of the fire and the likely location of the crew in the event of a fire. Automated systems are to be used where crews are not capable of extinguishing anticipated fires (large fires or fires where crew could be absent). Other systems may be effectively protected with portable extinguishers. Hand-operated extinguishers are to be clearly labeled and easily accessed by the crew. All extinguishing systems are not to create any additional hazardous conditions for the crew.]

9.8.2.2 Fire Protection System Health and Status

[V2 9060] The fire protection system health and status data **shall** be provided to the crew and other mission systems.

[Rationale: Design requirements are to ensure that the crew has the capability of determining the health and status of the fire protection system. The crew is to be aware as soon as possible when the fire protection system has failed or is unreliable.]

9.8.2.3 Fire Protection System Failure Alerting

[V2 9061] The crew **shall** be alerted to failures of the fire protection system.

[Rationale: Design requirements are to ensure that the crew is notified in the event the fire protection system fails. The crew is to be aware as soon as possible when the fire protection system cannot be relied upon.]

9.8.2.4 Fire Protection System Activation

[V2 9062] The fire protection system **shall** be capable of being manually activated and deactivated.

[Rationale: Automated systems may fail and not respond correctly to a fire or may continue extinguishing after a fire is under control. Design requirements are to ensure that the crew is provided with a fire protection system that allows for manual activation and deactivation.]

9.8.2.5 Portable Fire Extinguishers

[V2 9063] A fire protection system **shall** include manually operated portable fire extinguishers.

[Rationale: Small fires might be detected and controlled early (before detection by an automated system). Design requirements are to ensure that the crew is provided with a portable fire-fighting capability, even if a fixed firefighting system is provided.]

9.8.3 Emergency Equipment Accessibility

[V2 9064] Emergency equipment **shall** be clearly identified, accessible, and useable to complete emergency response in the time required.

Downloaded from http://www.everyspec.com

[Rationale: Design requirements are to consider all emergency scenarios requiring access to emergency equipment. Clear identification of emergency equipment includes markings, placards, labels, or etchings. The location and proximity of emergency equipment, with respect to the crew, impacts the accessibility of emergency equipment. For equipment to be usable, its design has to consider the crew-system interfaces to allow crew to safely, accurately, and completely respond to the emergency (e.g., fire). The design also has to account for the effects of the specific environment where the equipment may be used (e.g., microgravity, partial gravity). Requirements need to be defined in terms of time constraints to perform emergency actions. Furthermore, each emergency may have a unique time requirement and, therefore, a different constraint on access. Refer to HIDH for guidance on emergency response times, including fire extinguishment times.

10. CREW INTERFACES

This section covers the crew interfaces through which static and dynamic information is exchanged between the crew and the system (primarily through controls and displays). Well-designed crew interfaces are critical for crew safety and productivity and for minimizing training requirements. Visual displays deliver information by using visible media to present text, graphics, colors, images, video, and symbols. Audio displays deliver information using sound and include voice communication and audio alarms. Haptic displays deliver information using the sense of touch for the purpose of information presentation. Labels form a distinct class of crew interfaces, usually providing a static identification of a device or device component or brief static message. Labels may be text or graphic symbols. Communication systems form another special class of crew interfaces involving ongoing dynamic exchange of voice, text, video, and/or telemetry information between humans or between humans and systems.

10.1 General

10.1.1 Usability

10.1.1.1 Usability Acceptance Criteria

[V2 10001] Each program **shall** define usability acceptance criteria for crew interfaces.

[Rationale: Usable crew interfaces allow users to achieve task goals efficiently, effectively, and with satisfaction (ISO-9241-11). Efficiency, effectiveness, and satisfaction are the three major components of usability; therefore, acceptance criteria for all three should be defined by every program. Usability testing must be part of the verification process. Effective crew interfaces allow users to achieve specified tasks with accuracy and completeness. Efficient crew interfaces allow users to expend appropriate amounts of resources, e.g., time, workload, to achieve the effectiveness necessary in a specified context of use. Users are satisfied with a crew interface if they are willing to use a crew interface and have positive subjective responses and attitudes toward the crew interface.]

Downloaded from http://www.everyspec.com

10.1.1.2 Crew Interface Effectiveness

[V2 10002] The system **shall** provide crew interfaces that enable the crew to perform their tasks effectively, e.g., within acceptable error limits and scheduled operating times.

[Rationale: For optimal safety and productivity, crew interfaces are to support crew performance effectively with minimal errors. Errors are defined as an action that is not intended or desired by the person or a failure on the part of the person to perform a prescribed action within specified limits of accuracy, sequence, or time that does not produce the expected result and has led or has the potential to lead to an unwanted consequence. Usability errors include missed or incorrect inputs or selections, navigation errors, loss of SA, and inability to complete a task. The usability error rate is to be computed as a percentage and is to be calculated from the ratio of the number of task steps performed erroneously to the number of total task steps. A minimal impact error is defined as an error that does not result in a change to the system state, like vehicle or mission-critical robotics. Each program needs to define acceptable error limits and operating times based on detailed task analysis.]

10.1.1.3 Crew Interface Efficiency

[V2 10003] The system **shall** provide crew interfaces that are efficient, e.g., with reduced training time, task time, and frustration.

[Rationale: Efficiency is determined by time on task, number of errors made, and the training demands. Maximizing efficiency should not be achieved through high training demands or performance pressure. Crew interfaces that do not maximize efficiency can result in frustration.]

10.1.2 Handling Qualities

Handling qualities are defined as "those qualities or characteristics of [dynamic vehicle control] that govern the ease and precision with which a [user] is able to perform the tasks required" (Cooper and Harper, 1969). The Cooper-Harper rating scale is a standard method for measuring handling qualities.

10.1.2.1 Controllability and Maneuverability

[V2 10004] The spacecraft **shall** exhibit Level 1 handling qualities (Handling Qualities Rating (HQR) 1, 2 and 3), as defined by the Cooper-Harper Rating Scale, during manual control of the spacecraft's flight path and attitude when manual control is the primary control mode or automated control is non-operational.

[Rationale: Level 1 handling qualities are the accepted standard for manual control of flight path and attitude in military aircraft. Level 1 handling qualities will allow the crew to effectively control the spacecraft when necessary for mission completion or to prevent a catastrophic event. "Non-operational" is defined as automated control system failed or manually disabled. Select manual control scenarios that have to meet Level 1 handling qualities will be defined and scoped

Downloaded from http://www.everyspec.com

with applicable Program agreement. A scenario includes one or more handling quality-related vehicle control tasks performed during a flight phase under specified conditions. A handling quality-related task is defined as the manual control capability that is being rated with the Cooper-Harper Rating Scale. Each task within a scenario is rated separately and has to meet the appropriate Level 1 handling qualities (handling quality ratings of 1, 2, or 3). Reference NASA-TN-D-5153, The use of pilot rating in the evaluation of aircraft handling qualities, for the Cooper-Harper Rating Scale.]

Level 2 or better handling qualities (HQR 1-6) are acceptable during manual control in all other scenarios.

10.1.3 Standardization

10.1.3.1 Crew Interfaces Standardization

[V2 10005] Crew interfaces **shall** be standardized throughout a system.

[Rationale: The intent of this requirement is to ensure as much commonality and consistency as possible across a system. This facilitates learning and minimizes interface-induced crew error. Standardized/common interfaces are easy to learn and use, because new learning does not have to occur with each new interface. The use of lower level design standards and guidelines that specify the "look" (visual characteristics) and "feel" (style of interaction or operation) can help ensure standardization.]

10.1.3.2 Operations Nomenclature Standardization

[V2 10006] Operational nomenclature **shall** be standardized throughout a system.

[Rationale: It is imperative that spaceflight operations personnel, including all ground personnel and crewmembers, communicate using common nomenclature that unambiguously and uniquely defines all aspects of crew operations. This includes but is not limited to defining the operations, the methods employed by the crew, the equipment, hardware, and software items used, and any associated data. This nomenclature is also to be common among all operational products, including commands, procedures, displays, planning products, reference information, system handbooks, system briefs, mission rules, schematics, and payloads operations products.]

10.1.3.3 Display Standards, Labelling Plan, and Icon Library

[V2 10007] Each program **shall** establish display standards, a labelling plan, and an icon library.

[Rationale: A program-wide label plan is to explicitly specify the characteristics of labels such as font, size, style, color, etc., and includes many example pictures. A display standards document subsequently results in increased usability and safety since the plan enforces standardization. It also results in cost savings, since the plan simplifies label verification.]

Downloaded from http://www.everyspec.com

10.1.3.4 Units of Measure

[V2 10008] Units of measure **shall** be consistent across like items.

[Rationale: The intent of this requirement is to ensure the use of one unit across a system for common types of measurements. This minimizes crew training and the potential for conversion errors by crew and ground personnel, which can impact crew and vehicle safety.]

10.1.3.5 Crew Interface Operations Standardization

[V2 10009] Methods of operating crew interfaces **shall** be standardized within and across system elements.

[Rationale: The intent of this requirement is to ensure as much commonality and consistency of crew interface operations as possible across a spacecraft. This facilitates learning and minimizes interface-induced crew error. For example, if the operational design of a toggle switch for one spacecraft is such that up is on and down is off, that operational design should be the same across all spacecraft to avoid the potential for error and reduce training requirements.]

10.1.3.6 Consistent Displays and Controls

[V2 10010] Crew interfaces **shall** use consistent control and display layout within and across system elements.

[Rationale: The intent of this requirement is to ensure as much consistency of displays and controls as possible across a spacecraft. Consistent layouts make crew interfaces easy to learn and use, because learning does not have to occur when new displays or controls are encountered within or across the spacecraft.]

10.1.3.7 Displays and Controls Commonality

[V2 10011] Display and control interfaces performing similar functions **shall** have commonality.

[Rationale: The intent of this requirement is to ensure as much commonality of displays and controls as possible across a system. This can be achieved by specifying a standard "look" (visual characteristics) and "feel" (style of interaction or operation) for similar displays and controls. Common displays and controls are easy to learn and use because learning does not have to occur with each display or control.]

10.1.3.8 Consistent Procedures

[V2 10012] Procedures for performing similar tasks **shall** be consistent.

Downloaded from http://www.everyspec.com

[Rationale: The intent of this requirement is to ensure as much consistency of procedures as possible across a system. This can be achieved by specifying a standard "look" (visual characteristics) and "feel" (style of interaction or operation) for task procedures that are similar. The design of similar procedures should be consistent in terms of structure, format, sequence of steps, and other attributes. Consistent procedures are easy to learn and use because learning does not have to occur when new procedures are encountered. This applies to both the task actions as well as the documentation of procedures such as training materials and instructions.]

10.1.4 Distinction

10.1.4.1 Display and Control Distinctions

[V2 10013] Display and control actions that result in different outcomes **shall** be distinguishable to preclude unintended results.

[Rationale: Display and control actions that have different outcomes are not to be easily confused, else errors result. It is important that display and control actions be distinct, having different visual, haptic, and operational characteristics].

10.1.4.2 Syntax Distinction

[V2 10014] The syntax of any two commands that result in different outcomes **shall** be distinguishable to preclude issuing of the unintended command.

[Rationale: The syntax of commands that have different outcomes should be easy to differentiate. As an example, ending a program or navigating to the end of the data set should be issued by different commands such as "Quit" and "Go to End." Using the command "End" for both could be confusing to a person using a data base.]

10.1.5 Use of Cues, Prompts, or Other Aids

10.1.5.1 Use of Cues

[V2 10015] Crew interfaces **shall** use cognitive aids to reduce the demand on crewmember memory to allow the crew to accomplish their tasks within the required performance parameters.

[Rationale: Design requirements are to ensure that visual, auditory, or haptic cues are used as appropriate to communicate information and options and to remind the crew of expected events or actions. Such cues can speed understanding, maximize productivity, and minimize error. Visual, auditory, and haptic cues can be designed to communicate meaning, an event or condition, or group membership. Examples of reminder cues are pop-up visual alerts or auditory alarms. Examples of option cues are menus or other lists of applicable items.]

Downloaded from http://www.everyspec.com

10.1.5.2 Cue Saliency

[V2 10016] Cues **shall** be used such that the saliency of the cue is consistent with the importance of the message to be conveyed and urgency of response.

[Rationale: Visual, auditory, and haptic cues are to be highly noticeable when the message being conveyed is important and less noticeable when the message to be conveyed is not as important. The most important or critical alerts are to be highly noticeable, and less important alerts are to be less noticeable. This is done so that, when there is an off-nominal event, the response of the crew is appropriate. Edworthy (1994) provides design guidance for alert tones that convey meaning.]

10.1.6 System Interaction

10.1.6.1 System Health and Status

[V2 10017] The system **shall** provide system health and status information to the crew, either automatically or by request.

[Rationale: Key system parameters and off-nominal system, subsystem, and component trend data are to be available for crew viewing. System health and status information is critical for the crew to retain SA and to have the information necessary to make decisions and troubleshoot problems.]

10.1.6.2 System Messages

[V2 10018] System messages **shall** be specific and informative.

[Rationale: System messages are to be clearly written and understandable, so that they provide all the information necessary to address any issue at hand. Messages that are not specific and informative can cause errors. For example, when performing certain scientific experiments, a person may need to take certain actions at specific times throughout the experiment. Therefore, it may be necessary to display the actual time elapsed in seconds versus providing a simple on/off indicator. This level of detail is determined as a result of a task analysis of the scientific operation.]

10.1.6.3 Display Update

[V2 10019] Data **shall** be updated for display within 1.0 second of the crew-commanded state change.

[Rationale: When a change to vehicle state occurs, that change is to be reflected on the display monitor within 1.0 second. State changes are changes to the configuration or functional state of vehicle subsystems and components. A state change can be hardware or software. Excessive

Downloaded from http://www.everyspec.com

delays in the presentation of information lead to a decrease in productivity and an increase in frustration.]

10.1.6.4 Missing Data Display

[V2 10020] When the display of a data parameter cannot be completed because it is missing or unavailable, the system **shall** provide feedback to the crew within the time specified in Table 19, Maximum System Response Time(s).

[Rationale: Feedback on data that are unavailable, i.e., lost or stale, is important to the crew for accurately weighing data during troubleshooting and decision-making periods.]

Table 19 —Maximum System Response Time(s)

System Response	System Response Time (s)
Indication of a discrete input, e.g., keystroke	0.1
Display of information on crew request	1.0
Local update of crew selection, e.g., menu	0.5
Display of updated data on crew command of state change	1.0
Feedback that the crew's command is in progress, completed, or cannot be completed	2.0

10.1.6.5 Control Feedback

[V2 10021] The system **shall** provide a positive indication of crew-initiated control activation.

[Rationale: A positive indication of control activation is used to acknowledge the system response to the control action. For example, a physical detent, an audible click, an integral light, or a switch position may be used to provide a positive indication of control activation.]

10.1.6.6 System Feedback

[V2 10022] The system **shall** provide feedback to the crew in accordance with the system response times in Table 19.

[Rationale: Response times that are too long will impair interaction, often resulting in additional, redundant inputs, errors, and frustration. Minimizing variability in response time is also important.]

10.1.7 Electronic Procedures

10.1.7.1 Current Procedure Step

[V2 10023] The system **shall** indicate to the crew which step in the electronically displayed procedure is currently being executed.

Downloaded from http://www.everyspec.com

[Rationale: The current procedure line is to be highlighted in some way to prevent the crew from missing steps, which can result in errors and wasted time. In addition, if the crew becomes distracted or called to support a different task and needs to be able to come back to the last completed step, devices/markers should be available to support resuming the interrupted procedure.]

10.1.7.2 Completed Procedure Steps

[V2 10024] The system **shall** indicate to the crew which steps in the electronically displayed procedure have been completed.

[Rationale: This requirement prevents the crew from re-executing steps in a procedure by highlighting the steps that have been completed. Completed steps need to be highlighted in some way to prevent the crew from re-executing steps, which can result in errors and wasted time.]

10.1.7.3 View of Procedure Steps

[V2 10025] The system **shall** provide a method for viewing prior and future steps in the electronically displayed procedure.

[Rationale: The crew is to be able to look back in procedures to see what has been completed and to be able to look forward in procedures to see upcoming steps.]

10.1.7.4 Procedure Flexibility

[V2 10026] The system **shall** provide a method for the crew to make real-time insertion, deletion, and rearrangement of electronic procedures.

[Rational: During the course of a mission, the crew may need to make real-time modifications of procedures. In addition, performance can often be more effective if the sequence of procedures remains flexible throughout the mission. For lunar robotic activities, a priori information (resolution of maps, simulation of mobility over lunar regolith) of the lunar surface (or lack thereof), plans, and timelines for activities will be subject to change in real time. Real-time replanning of lunar surface activities will be necessary, and corresponding electronic procedures will need to be rearranged and assessed accordingly.]

10.1.8 Error Prevention and Recovery

10.1.8.1 Inadvertent Operation Prevention

[V2 10027] Control systems **shall** be designed to prevent inadvertent operation.

[Rationale: This requirement allows for the design to preclude inadvertent operation. For example, accidental activation by bumping can be prevented by the use of guards, covers, and

Downloaded from http://www.everyspec.com

physical separation from other controls. Accidental activation of commands using a computer display can be prevented with an "arm-fire" mechanism. This requirement is not intended to prevent operators from initially selecting the wrong control.]

10.1.8.2 Inadvertent Operation Recovery

[V2 10028] Control systems **shall** allow for recovery from inadvertent operation and accidental changes in system status.

[Rationale: This requirement allows for the design of mechanisms for fixing a control input. If there has been an inadvertent input or a mistake in input, design requirements are to ensure the crew can recover with minimal impact.]

10.2 Layout of Displays and Controls

10.2.1 Location

Deleted:

[V2 10029] Requirement deleted.

10.2.1.1 Display and Control Location and Design

[V2 10030] Displays and controls **shall** be designed and located so that they are operable to the required degree of accuracy in expected operating positions and conditions.

[Rationale: Displays need to be visible and controls need to be within the functional reach envelope and operable to the required degree of accuracy (determined by a task analysis). This applies to all vehicle conditions (e.g., g-loads and vibration) and expected crew postures (e.g., suited, seated, restrained, and unrestrained). Controls can include display devices such as touchscreens. This requirement is intended to encourage the design of a layout that optimizes operations in the cockpit.]

10.2.1.2 High Priority Displays and Controls

[V2 10031] Emergency, critical, important, and most frequently used displays and controls **shall** be located in the most prominent crew viewing and operating zones.

[Rationale: During the design process, trade-off of location of critical controls is to be made; however, all controls are required to be within the functional reach envelope of the crew. The most important or critical displays and controls are to be located in the most prominent, noticeable locations and also be quickly accessible. This helps ensure quick processing and reaction to important displays and controls. Criticality should be determined through a detailed task analysis.]

Downloaded from http://www.everyspec.com

10.2.2 Display and Control Grouping

[V2 10032] Displays and controls **shall** be grouped according to purpose or function.

[Rationale: This requirement is intended to encourage the design of a layout that optimizes operations in the cockpit. This would help ensure that displays and controls are easily accessible when used together. Grouping should be determined through a detailed task analysis.]

10.2.3 Display-Control Relationships

10.2.3.1 Display-Control Relationships

[V2 10033] All display-control relationships **shall** be logical and explicit.

[Rationale: The relationship between displays and controls needs to be obvious. This relationship can be indicated by relative location, color coding, and labeling. This requirement is intended to encourage the design of a layout that optimizes operations in the cockpit. This helps ensure that it is easy for the crew to understand how displays and controls are related without additional instructions or explanations.]

10.2.3.2 Display and Control Movement Compatibility

[V2 10034] Displays **shall** be compatible with control movement, e.g., control motion to the right is compatible with clockwise roll, right turn, and direct movement to the right.

[Rationale: The movement of a control is to have an intuitive correspondence to the movement on a display. If displays are overlaid on a visual (camera or direct view) scene, control movement should be relative to this point of view. This helps ensure easy understanding of relations between controls and displays.]

10.2.3.3 Display and Control Sequence of Use

[V2 10035] Displays and controls **shall** be arranged in relation to one another according to their sequence of use.

[Rationale: Rapid, error-free operation and quick comprehension of system status are all improved by well-designed co-location of related controls. Displays and controls that are used in sequence are to be placed accordingly].

Downloaded from http://www.everyspec.com

10.3 Displays

10.3.1 Display Design

10.3.1.1 Display Identifying Features

[V2 10036] Displays **shall** have identifying features (such as location, size, shape, and color) that allow the crew to correctly navigate, locate, and identify the display in a timely manner.

[Rationale: Display characteristics are to make displays easy to identify to prevent mode confusion and maintain SA.]

10.3.1.2 Display Area

[V2 10037] The system **shall** provide the display area to present all critical task information within a crewmember's field of regard.

[Rationale: To ensure that critical tasks can be performed quickly, easily, and accurately, especially during critical mission phases, it is important to avoid scrolling or switching among several display pages and to avoid excessive head or body movement by the crewmember to view several displays. Criticality should be deteremined through a detailed task analysis.]

10.3.2 Display Content

10.3.2.1 Display Interpretation

[V2 10038] Displays **shall** be accurately interpretable within the time required to meet mission needs.

[Rationale: To increase the user's accuracy and response time, displays need to provide the required information in a manner that is compatible with the operating environment and the decision to be made.]

10.3.2.2 Display Readability

[V2 10039] Displays **shall** be readable by the crew from the crew's operating locations and orientation.

[Rationale: Design of the displays is to be appropriate for the possible viewing angles, distances of the crew, and the expected environmental conditions during use (such as high acceleration and/or vibration). This will ensure that the information on the displays will be accurately and completely read from all operating locations and orientations.]

Downloaded from http://www.everyspec.com

10.3.2.3 Display Information

[V2 10040] Information displayed **shall** contain only what is needed for the crew to maintain SA, diagnose, make decisions, plan responses, and perform the required tasks.

[Rationale: Too much information increases visual clutter and leads to increased task completion times. Lack of relevant information impacts situational awareness and increases the chances of an error. Appropriate display content can be determined by task analysis.

Deleted:

[V2 10041] Requirement deleted.

10.3.2.4 Display Information Flow

[V2 10042] Information displayed **shall** be grouped, arranged, and located to support task flow.

[Rationale: The information displayed should be grouped, arranged, and located based on frequency of use, sequence of use, and criticality to support the task flow. This helps ensure that the task is accomplished in a timely manner. Task flow should be determined through a detailed task analysis]

10.3.2.5 Display Navigation

[V2 10043] Display navigation **shall** allow the crew to move within and among displays without loss of SA and in a timely manner.

[Rationale: Unnecessary steps in navigation may increase task time and may reduce crew's SA related to task completion. In general, to make navigation more transparent, it is recommended to have a shallow navigational structure for navigation instead of a deep structure.]

10.3.2.6 Display Nomenclature

[V2 10044] The nomenclature for each item or process **shall** be self-explanatory and direct the crew to the function or usage of the item.

[Rationale: Item and process names are to be easy to understand and to remember. This limits the time spent on recognizing and understanding names. Also, this limits the training needed to understand the nomenclature of the items.]

10.3.2.7 Display Coding Redundancy

[V2 10045] For critical information and critical tasks when color is used to convey meaning, the system **shall** provide an additional cue.

Downloaded from http://www.everyspec.com

[Rationale: Redundant coding is required to accommodate the variability in people's capability to see color under different lighting conditions and to increase the saliency of identification markings. Redundant cues can include labels, icons, and speech messages.]

10.3.2.8 Measurement Units

[V2 10046] Units of measure **shall** be displayed with their corresponding values.

[Rationale: Measurement units are to be identifiable with the correct magnitude and scale. This ensures correct decision making when comparing or using these units in some other way.]

10.3.3 Visual Display Devices

10.3.3.1 Visual Display Legibility

[V2 10047] Displays **shall** be legible in the viewing conditions expected during task performance.

[Rationale: Legibility includes both text elements, as well as meaningful graphic elements such as symbols, icons, and maps, and is important for the timely and accurate processing of information. Legibility depends upon display properties such as resolution and contrast, as well as text properties such as font contrast, color, and size, background color and texture, as well as the visual capabilities of the crew and the ambient illumination. In addition, the possible viewing angles, distances of the crew from displays, the presence of a visor, and the expected environmental conditions during use (such as high acceleration and/or vibration) need to be considered.]

10.3.3.2 Visual Display Parameters

[V2 10048] Displays **shall** meet the visual display requirements in Table 20, Visual Display Parameters.

[Rationale: Legibility of displayed information is important for the timely and accurate processing of information. To ensure legibility and visual quality, displays are to have sufficient spatial and temporal resolution, brightness, luminance contrast, and color gamut, taking into account the ambient illumination, glare, reflections, vibration, and distance, position, and orientation of the display relative to the crew.]

Downloaded from http://www.everyspec.com

Table 20—Visual Display Parameters

Metric	Minimum	Maximum	Context	Notes
Peak white luminance	25 cd/m^2	--	Emissive displays	≥100 cd/m^2 preferred
Ambient contrast ratio	10	--		Includes ambient illumination
Color gamut area	0.17	--	Color displays	Fraction of CIE 1976 u'v' chromaticity space
Viewing angle	-45 deg	+45 deg		Four point viewing angle (left, right, up, down), contrast and color gamut criteria met
Spatial resolution	32 pixels/deg	--	Image and video displays	
Frame rate	60 Hz	--	Video displays	
Moving edge blur	--	15 ms		Using metric GET (preferable) or BET; use average of five equal lightness levels, including white and black
Number of colors	2^{24} (1,627,716)	--	Image and video displays	
	2^{12} (4,096)	--	Text and graphics displays	
Number of gray levels	2^8 (256)	--	B/W image and video displays	
Note: Except where noted, metrics are as defined as in International Committee on Display Metrology (ICDM), Display Measurement Standard (DMS 1.0), or Video Electronics Standards Association (VESA) Flat Panel Display Measurements (FPDM 2.0). Further details on metrics may be found in chapter 10, Crew Interfaces, of the HIDH.				

10.3.3.3 Visual Display Character Parameters

[V2 10049] Displays **shall** meet the visual display character requirements in Table 21, Visual Display Character Parameters.

[Rationale: Character (text) elements are a critical component of displayed information, and the legibility of characters is important for timely and accurate processing of information. To ensure legibility of text, characters are to have sufficient luminance contrast and size, taking into account the ambient illumination, glare, reflections, vibration, and distance, position, and orientation of the display relative to the crew. Character contrast refers to the ratio of character luminance to background luminance. Font height in degrees refers to the angle subtended at the eye by the height of an upper-case letter in the font.]

Downloaded from http://www.everyspec.com

Table 21—Visual Display Character Parameters

Metric	Minimum	Notes
Character contrast	0.2 (Weber Contrast)	Includes ambient illumination
Character height	0.25 deg	≥0.4 deg preferred. (0.25 deg is 10-point type at 32 in)

10.3.3.4 Display Font

[V2 10050] Font size and type **shall** be selected to ensure acquisition, readability, and interpretability of visual displays.

[Rationale: Choice of text font and size can have a large impact on legibility and is important for the timely and accurate processing of information. While a minimum character height may be acceptable in some circumstances, in general, the size required depends on the task. For example, the smallest font sizes are acceptable for occasional scrutiny, but comfortable reading relies on larger font sizes; rapid comprehension of critical displays relies on larger fonts still. All font size choices depend on the visual capabilities of the crew, including visual acuity and ability to accommodate. In addition, the possible viewing angles, distances of the crew from displays, and the expected environmental conditions during use (such as high acceleration and/or vibration) need to be considered.]

10.3.4 Audio Displays

10.3.4.1 General Audio Displays

10.3.4.1.1 Intelligibility of Electronically Stored Speech Messages

[V2 10052] Electronically stored speech messages from audio displays **shall** have 100% intelligibility and discriminability between the ensemble of different messages the audio display is programmed to produce (as measured under realistic background noise conditions and at locations where the display will be used).

[Rationale: Some audio displays and alarms express their messages using electronically stored speech. The consequences of misunderstanding these messages can result in lost time and possible missed or false alarms and can ultimately be a critical safety issue.]

10.3.4.1.2 Sound Pressure Level

[V2 10053] The system **shall** provide SPLs above background noise and compliant with acoustic limits to ensure audio display usability.

[Rationale: Auditory displays are to be audible as well as interpretable by the crew. This helps make sure that appropriate responses are taken as needed.]

Downloaded from http://www.everyspec.com

10.3.4.1.3 Sound Distortion Level

[V2 10054] The system **shall** provide audio signals with a minimal level of distortion and an appropriate frequency range to ensure usability of the audio display.

[Rationale: Auditory displays are to be audible as well as interpretable by the crew. This helps makes sure that appropriate responses are taken as needed.]

10.3.4.1.4 Distinguishable and Consistent Alarms

[V2 10055] The system **shall** provide distinguishable and consistent alarms to ensure audio display usability.

[Rationale: Different types of alarms (different enough to be easy to identify) are to be used. To avoid confusion, the alarm system is to use a distinctive signal to ensure appropriate responses from the crew.]

10.3.4.2 Sound Characteristics

10.3.4.2.1 Audio Display Sound Level

[V2 10056] Alarms **shall** produce auditory annunciations with an SPL that meets at least one of the following criteria:

a. Using measurements of A-weighted sound levels (ISO 7731:2003(E), Ergonomics – danger signals for public and work areas – Auditory danger signals, method a in section 5.2.2.1), the difference between the two A-weighted SPLs of the signal and the ambient noise is greater than 15 dBA (LS,A to LN,A > 15 dBA).

b. Using measurements of octave band SPLs (ISO 7731:2003(E), method b in section 5.2.3.1), the SPL of the signal in one or more octave bands is greater than the effective masked threshold by at least 10 dB in the frequency range from 250 Hz to 4,000 Hz (LSi,oct to Lti,oct > 10 dB).

c. Using measurements of 1/3 octave band SPLs (ISO 7731:2003(E), method c in section 5.2.3.2), the SPL of the signal in one or more 1/3 octave bands is greater than the effective masked threshold by 13 dB in the frequency range from 250 Hz to 4,000 Hz (LSi,1/3oct to LTi,1/3oct > 13 dB).

[Rationale: To get the attention of the crew, alarms are to be louder than the background noise. The masking threshold is the SPL of a sound one needs to hear in the presence of a masker signal. Having the audio displays 13 dB above the masked threshold ensures that the crew can hear them, regardless of the background noise.]

Downloaded from http://www.everyspec.com

10.3.4.2.2 Reverberation Time

[V2 10057] The system **shall** provide a reverberation time of less than 0.6 seconds within the 500-Hz, 1-kHz, and 2-kHz octave bands.

[Rationale: This 0.6-second reverberation time requirement limits degradation of speech intelligibility to no more than 10% for ideal signal-to-noise ratios of >30 dB or 15% for a signal-to-noise ratio of 3 dB (Harris, 1997).]

10.3.4.2.3 Frequency

[V2 10058] Frequency content of auditory alarms **shall** correspond to maximal human sensitivity (200 Hz to 4 kHz).

[Rationale: Auditory alarms are to use frequencies that are appropriate for human hearing. Using frequencies below or above those appropriate for human hearing makes auditory displays inaudible for the crew.]

10.3.4.2.4 Auditory Alarms for Sleeping Crewmembers

[V2 10059] If the alarm signal is intended to arouse sleeping crewmembers, the requirement in section 10.3.4.2.1, Audio Display Sound Level [V2 10056], in this NASA Technical Standard **shall** be increased by an additional 5-dB signal-to-noise ratio at the sleep head-location with all sleep station doors closed.

[Rationale: Although conclusive data do not exist, the additional 5 dB will better assure the awakening of sleeping crewmembers so that they can respond to emergency alarms.]

10.3.5 Labels

10.3.5.1 Label Provision

[V2 10060] Labels **shall** be provided, as necessary, for the crew to identify items, interpret and follow nominal and contingency procedures, and avoid hazards.

[Rationale: Crew interface items are to have identifiers (labels) to aid in crew training and error-free operation. Labels reduce memory load and improve accuracy of tasks. This includes identification of emergency equipment and procedures.]

10.3.5.2 Label Standardization

[V2 10061] Labels **shall** be consistent and standardized throughout the system.

Downloaded from http://www.everyspec.com

[Rationale: Standardization of labels reduces learning and recognition times, which is especially important in emergencies. Specific labels are always to be used for the same type of item, and similarities are reflected by using similar nomenclature on the label.]

10.3.5.3 Label Display Requirements

[V2 10062] Labels **shall** meet the requirements of visual displays (section 10.3.3, Visual Display Devices, in this NASA Technical Standard), except font height (section 10.3.5.7, Label Font Height [V2 10066], in this NASA Technical Standard).

[Rationale: The requirements that apply to visual displays also apply to labels in all aspects such as font size, colors, contrast, and legibility. By meeting requirements, crew performance across systems is enhanced.]

10.3.5.4 Label Location

[V2 10063] Labels **shall** be positioned on or directly adjacent to the item they are labeling.

[Rationale: Labels that are placed far from items they intend to label can result in the crew's missing their association or misidentifying items. This can slow down task performance and may cause errors.]

10.3.5.5 Label Categories

[V2 10064] Labels **shall** be categorized by type, e.g., safety, procedure, and identification, with each label type having standardized, visually distinct characteristics.

[Rationale: Labels are to be categorized as a certain type and thus be identified as being part of that category. Providing similar characteristics for labels of similar type can improve identification and interpretation of labels.]

10.3.5.6 Label Distinction

[V2 10065] Labels **shall** be easily recognizable and distinguishable from other labels.

[Rationale: Each label is to be distinctive enough to be recognized as an individual label. Individually distinguishable labels reduce the possibility of errors and confusion and save crew time.]

10.3.5.7 Label Font Height

[V2 10066] Font height of 0.4 degrees or greater **shall** be used on labels.

[Rationale: Font height in degrees refers to the angle subtended at the eye by the height of an uppercase letter in the font. Labels are to use a large enough font size to ensure legibility. Small

Downloaded from http://www.everyspec.com

fonts can make labels difficult to perceive by the crew, consequently increasing the time needed for item identification. The font height given is a minimum. The font may have to be larger for readability when taking into account the ambient illumination, glare, reflections, vibration, position, and orientation of the label relative to the crew.]

10.4 Controls

10.4.1 Control Shape

[V2 10067] The shape of a control **shall** not interfere with ease of control manipulation.

[Rationale: The shape chosen for a control is to facilitate use, rather than making it more difficult to use. This makes sure that the operation of controls is easy and does not cause fatigue or time delays.]

10.4.2 Identification

10.4.2.1 Control Identification

[V2 10068] Controls that are intended for out-of-view operation **shall** be spatially or tactually distinct from one another.

[Rationale: When the crew inadvertently operates the wrong control, serious errors can result. Controls designed to be out of view while being operated are to be spaced or shaped/textured such that the control can be identified with a pressurized gloved hand without line of sight. This would include controls for vehicle operation, as well as other controls, e.g., seat positioning). It has been shown that human operators can use simple tactile coding to reliably distinguish between items.]

10.4.2.2 Emergency Control Coding

[V2 10069] The system **shall** provide coding for emergency controls that are distinguishable from non-emergency controls.

[Rationale: When the crew inadvertently operates the wrong control, serious errors can result. Controls designed to be out of view while being operated are to be spaced or shaped/textured such that the control can be identified with a pressurized gloved hand without line of sight. This would include controls for vehicle operation, as well as other controls, e.g., seat positioning. It has been shown that human operators can use simple tactile coding to reliably distinguish between items.]

Downloaded from http://www.everyspec.com

10.4.3 Access

10.4.3.1 Control Size and Spacing

[V2 10070] The size and spacing of controls **shall** be optimized for operation by the expected body part, e.g., finger, hand, foot, and expected clothing.

[Rationale: The size of a control is to be appropriate for the way it is intended to be used. Controls operated by finger are to be smaller than controls operated by hand to ensure optimal manipulation. Incorrectly sized controls may cause errors during control operation.]

10.4.3.2 Control Arrangement and Location

[V2 10071] The arrangement and location of functionally similar or identical controls **shall** be consistent throughout the system.

[Rationale: Controls with similar functions are to have similar properties, specifically location and arrangement for easy identification. This helps reduce the time necessary to find and operate a control.]

10.4.3.3 Control Proximity

[V2 10072] Controls used by a restrained or unrestrained crewmember **shall** be located within the functional reach zones of the crew.

[Rationale: A control that is required to be used at any time in a task is to be readily available and reachable by the crew to ensure smooth operation. Controls that are not readily available or not reachable can increase the time to perform operations.]

10.4.3.4 Control Operation during Accelerations

[V2 10073] The system **shall** provide body or limb supports and restraints that enable accurate crew control of applicable interfaces and prevent inadvertent control inputs during expected microgravity, acceleration, and vibration conditions.

[Rationale: During expected microgravity acceleration and vibration conditions, the accuracy of gross limb movements is compromised, and thus control action under these conditions is to be limited to hand and wrist motions alone. Furthermore, accidental actuation of controls can result in errors and reduce safety.]

Downloaded from http://www.everyspec.com

10.4.4 Operating Characteristics

10.4.4.1 Control Operating Characteristics

[V2 10074] Controls **shall** have operating characteristics, e.g., control type, forces, response rate, response latency, tactile feedback, to allow the crew to make the controlled item respond with the required levels of accuracy, precision, and speed.

[Rationale: Controls are to have the appropriate properties to allow for error-free operation. Controls can be tested to make sure that their speed, response to action, and other properties are optimal for their intended operational conditions. Control operating characteristics of vehicle should be evaluated in conjunction with handling qualities, controllability, and maneuverability.]

10.4.4.2 Control Input-Response Compatibility

[V2 10075] Controls **shall** be compatible with the resulting system response.

[Rationale: The relation between input direction and system responses is to be intuitive and easy to perceive. This makes sure that when a control is used, system response is easy to link and conforms to crew expectations. Operator confusion may result, should system responses not be compatible with input directions.]

10.4.4.3 Control Latency

[V2 10076] The system **shall** provide controls such that the crew is unimpeded by the time lag between the operation of a control and the associated change in system state.

[Rationale: State changes associated with the operation of a control are to be easy to link together in time. If the two events occur with a time lag, it is difficult to identify whether the operation of the control had the intended effect.]

10.4.4.4 Control Resistive Force

[V2 10077] Control resistive force **shall** prevent unintended drifting or changing of position.

[Rationale: Controls are not to be capable of being accidentally actuated by unintended actions. This reduces the number of errors and increases safety.]

10.4.4.5 Detent Controls

[V2 10078] Detent controls **shall** be provided when control movements occur in discrete steps.

Downloaded from http://www.everyspec.com

[Rationale: Mechanisms that provide control feedback to crewmembers are to be based on the amount of the movement applied to the control. This is usually provided using auditory and haptic feedback.]

10.4.4.6 Stops Controls

[V2 10079] Stops **shall** be provided at the beginning and end of a range of control positions, if the control is not required to be operated beyond the end positions or specified limits.

[Rationale: Limits within which controls can be operated are to be obvious to the crew by the provision of easy-to-perceive stops in the mechanism of the controls. Failure to include stops can result in increased operations time, as the operator may needlessly continue to turn a dial after it has reached its functional end point.]

10.4.5 Confirmation

10.4.5.1 Command Confirmation

[V2 10080] Crew confirmation **shall** be required before completing critical, hazardous, or destructive commands.

[Rationale: Critical commands are to be prevented from being accidentally issued, which can be accomplished by requesting confirmation from the crew, thus reducing the chance of errors.]

10.4.6 Suited Use of Controls

10.4.6.1 Suited Control Operations

[V2 10081] Controls to be used by suited crewmembers **shall** be operable by a suited crewmember.

[Rationale: Controls that are intended to be used by suited crewmembers are to have the appropriate features for suited use. For instance, these controls may have to be adjusted to increase haptic feedback when used with gloved hand to make sure that the speed and accuracy of suited use is comparable to unsuited performance.]

10.4.6.2 Suited Control Spacing

[V2 10082] Controls to be used by suited crewmembers **shall** be spaced such that they can be operated by a suited crewmember without inadvertent operation of adjacent controls.

[Rationale: Control layout is to take into account the fact that pressurized suited operators cannot operate with the same precision and dexterity as lightly clothed crewmembers in expected

Downloaded from http://www.everyspec.com

conditions, e.g., g-loads, vibration, and acceleration. Insufficient spacing may lead to inadvertent operation of an adjacent control.]

10.5 Communication Systems

Communication systems include information (e.g., telemetry) provided to and from the crew by way of voice, text, or video.

10.5.1 Communication System Design

[V2 10083] Communication systems **shall** be designed to support coordinated and collaborative distributed teamwork.

[Rationale: To ensure optimal team collaboration in exploration missions, it is essential to design communication systems that provide an accurate, comprehensive, real-time understanding of the current situation and to implement tools that enable team members across the multi-team system of crew and ground to communicate and collaborate effectively. This is particularly critical when teams are operating in the presence of communication transmission delays and intermittent transmission. Communication systems process information to and from the crew and may consist of the following media: voice, video, text, and data.]

10.5.2 Communication Capability

[V2 10084] The system shall provide the capability to send and receive communication among crewmembers, spacecraft systems, and ground systems to support crew performance, behavioral health, and safety.

[Rationale: Communication capabilities are necessary to enable information exchange in order to accomplish tasks efficiently, to maintain crew physical and behavioral health, and to ensure crew safety. The capability to send and receive information among crew (intravehicular activity (IVA) and EVA), Earth-based mission control, orbiting vehicles, planetary habitats, rovers, robotic systems, and other systems is to be supported as required by the task analysis for the particular Design Reference Mission (DRM). Communications can include voice, text, video, telemetry, and other formats, depending on the needs as determined by a task analysis.]

10.5.3 Audio Communications

10.5.3.1 Communication Speech Levels

[V2 10085] Audio communication systems **shall** allow crew to communicate with one another and with the ground at normal speech levels and with expected background SPLs.

[Rationale: When crewmembers and ground personnel use the voice communication systems, they are to be able to do so using their normal level of speech, rather than having to raise their

Downloaded from http://www.everyspec.com

voices to higher levels. Higher voice levels distort sounds, make speech less intelligible, and are more strenuous to keep up for longer periods.]

10.5.3.2 Communication Operational Parameters

[V2 10086] To ensure intelligibility, audio communications **shall** address system operational parameters, including frequency, dynamic range, noise cancelling and shields, pre-emphasis, and peak clipping.

[Rationale: Communication is optimized by taking into account all parameters needed for speech intelligibility. For example, noise cancelling can enable normal voice levels.]

10.5.3.3 Communication Environmental Parameters

[V2 10087] To ensure intelligibility, audio communications **shall** address appropriate background sound levels and architectural acoustical characteristics for both transmitter and receiver area.

[Rationale: Background noise, reverberations, and other acoustic phenomena are not to interfere with crew communications. High levels of background noise can make audibility of speech difficult; similarly, high reverberations interfere with speech intelligibility.]

10.5.3.4 Communication Controls and Procedures

[V2 10088] To ensure intelligibility, audio communications **shall** address operating controls and procedures, including volume, squelch, natural language, acknowledgement feedback, and muting.

[Rationale: Appropriate controls and procedures are to be employed to increase intelligibility. Procedures are to use natural language; there are to be ways to acknowledge receiving a message or muting a message. This improves communications by reducing frustration and confusion.]

10.5.3.5 Communication Transmitter and Receiver Configuration

[V2 10089] To ensure intelligibility, audio communications **shall** address transmitter and receiver configuration, e.g., headsets, microphones, air conduction, and bone conduction.

[Rationale: Transmitters and receivers are to have optimal properties to support good communication. By having appropriate headsets and microphones, the crew can send and receive high-quality voice and audio.]

Downloaded from http://www.everyspec.com

10.5.3.6 Audio Communications Quality

[V2 10090] Audio communication speech quality **shall** ensure that auditory speech communications do not impact crew performance.

[Rationale: Audio communication is to be of the appropriate quality to help and not impede task completion. If procedures, for example, cannot be heard appropriately, it is likely that errors are going to occur.]

10.5.3.7 Speech Intelligibility

[V2 10091] For critical communications, the system **shall** ensure 90% English word recognition, using ANSI/ASA S3.2-2009, Method for Measuring the Intelligibility of Speech over Communication Systems.

[Rationale: Voice communication is to be perceived accurately. If messages are perceived with errors or low precision, important information may be missed; therefore, crew may make errors in tasks, and their safety may be jeopardized. Note: Section 10.5.3.7, Word Recognition [V2 10091, in this NASA Technical Standard is not meant to apply to speech recognition software.]

10.5.3.8 Private Audio Communication

[V2 10093] The system **shall** provide the capability for private audio communication with the ground.

[Rationale: Private communication capabilities are to exist for the crew to discuss topics such as family, health, and medical issues with the ground in private.]

10.5.4 Video Communications

Video communications systems are communications channels designed to convey visual information such as camera video, animated graphics, and photographic images.

10.5.4.1 Video Communications Visual Quality

[V2 10094] Video communications **shall** employ digital encoding or alternate coding of equivalent visual quality.

[Rationale: The quality of the video communications is to be appropriate for correct information transfer. Bad image quality can be misinterpreted, can cause communication problems, and can increase time needed to accomplish tasks.]

10.5.4.2 Video Communications Spatial Resolution

[V2 10095] Video communications **shall** provide sufficient spatial resolution (width and height in pixels) to accomplish relevant tasks.

Downloaded from http://www.everyspec.com

[Rationale: The resolution of video is to be appropriate for the task that it is intended to serve, so that errors related to artifacts of low resolution and delays in task completion are avoided.]

10.5.4.3 Video Communications Temporal Resolution

[V2 10096] Video communications **shall** provide sufficient temporal resolution (frames/s) to accomplish relevant tasks.

[Rationale: The temporal resolution of a communication is to be appropriate so as to perceive human speech, motion, and object motion through the video. Inappropriate resolution can make these more difficult or impossible, thus causing difficulties in information transfer.]

10.5.4.4 Video Communications Color and Intensity

[V2 10097] Video communications **shall** provide sufficient color and intensity levels to accomplish relevant tasks.

[Rationale: Color and intensity are to be transmitted appropriately. Inappropriate color and intensity in video communication may cause misidentification and misinterpretation of information, thus causing errors and problems in task completion.]

10.5.4.5 Video Communications Bit Rate

[V2 10098] Video communications systems **shall** support bit rates high enough to ensure that compression artifacts are as low as reasonably achievable.

[Rationale: The compression method and level used for video communication are not to introduce excessive visible artifacts. Artifacts can hinder information transfer and can cause communication difficulties.]

10.5.4.6 Audio-Visual Lag Time

[V2 10099] Communications systems that carry sound and video that are intended to be synchronized **shall** ensure that the sound program does not lead the video program by more than 15 ms or lag the video program by more than 45 ms.

[Rationale: The video and associated audio should not have time lag that can cause perceptual difficulties for the crew. When listening to human speech, even small lags between audio and video can be noticeable and disturbing.]

10.6 Automated and Robotic Systems

Decisions regarding functional allocations between crew and automation define the level of automation that is designed into a particular operation. Low levels of automation yield

Downloaded from http://www.everyspec.com

operations in which most task elements are performed manually; high levels yield operations in which most task elements are performed by machine. However, all levels of automation require interfaces with the user. A special category of automated systems is the mobile machine, which includes rovers, robotic agents, and mobile assistants, operating in space or on planetary surfaces. Mobile and autonomous machines rely on crew interfaces with special constraints.

10.6.1 Automated and Robotic System Design

10.6.1.1 Automated and Robotic System Provision

[V2 10100] Automated or robotic systems **shall** be provided when crew cannot reliably, safely, or efficiently perform assigned tasks.

[Rationale: Tasks that cannot be reliably, safely, or efficiently performed by the crew are to be identified. Requirements are to provide automated or robotic solutions that can perform these identified tasks. Tasks may include ones where 1) crew cannot respond as quickly, precisely, or repeatedly as necessary; 2) crew cannot physically complete the task; or 3) using automation/robotic solutions reduces crew risk exposure (e.g., high radiation environments, limited life support availability). The program will set requirements specifying appropriate capabilities to be provided for real-time monitoring of crew physiological or behavioral information to be fed back to the human or automated/robotic solution to facilitate crew readiness to perform (e.g., through intelligent alerting) or automated performance of identified tasks (e.g., in the event of assured indication of crew incapacitation).]

10.6.1.2 Automated and Robotic System Design

[V2 10101] Automated and robotic systems **shall** include safeguards to prevent mission degradation, equipment damage, or injury to crew.

[Rationale: Automated and robotic systems are to have preventive/safety measures in place such as mechanical constraints, threshold set points, automatic shutoffs, and emergency stops to ensure that they cannot negatively impact the mission, hardware, or crew health and safety. Robotics systems with internal safety checks that recognize and avoid unsafe conditions, e.g., excessive speed, force, torque, are more likely to achieve mission success. This applies to robotic systems both inside and outside spacecraft. For more information regarding this subject, see chapter 10, Crew Interfaces, of the HIDH.]

10.6.1.3 Robotic Control Stations - Common and Consistent

[V2 10102] For a given robotic system, operator control stations **shall** be common and consistent, independent of physical location, e.g., on Earth, in space, on the lunar surface, or on a planetary surface.

[Rationale: The intent of this requirement is to ensure that robotic control stations are the same to the greatest extent possible, especially when the tasks are the same, regardless of their

Downloaded from http://www.everyspec.com

physical location. This includes all operator hardware and software interfaces, as well as physical layout and design. Control stations for a given system may exist in different locations, such as on Earth, in space, on the lunar surface, or on a planetary surface. Likewise, a robotic system may be controlled or monitored by multiple operators simultaneously. It is important that operators be able to transfer skills and share knowledge in real time without losing SA or experiencing negative training. Limitations may be present when real estate or other potential constraints exist, i.e., control of a robot from an EVA suit.]

10.6.1.4 Automated and Robotic System Situational Awareness

[V2 10103] Operator control stations for automated or robotic systems **shall** provide the displays and interfaces needed for SA to perform tasks and manage the system.

[Rationale: Operator control stations need to be designed such that the SA necessary for efficient and effective task performance is provided, and can be recovered if lost. Particular consideration should be paid to telerobotic software and hardware that may be required to operate robotic systems in the presence of communication transmission delays or when the operator and automation/robot are not co-located.]

10.6.1.5 Automation Levels

[V2 10104] The crew interfaces to automated and robotic systems **shall** support the appropriate level(s) of automation to accomplish the task effectively.

[Rationale: Design requirements are to ensure that different levels of automation are available, depending on which level best suits the task/situation. While higher levels of automation result in increased crew performance (e.g., less errors) and lower workload, however, also result in poorer SA and loss of crew skills (Onnusch, Wicken, Li, & Manzey, 2013). This trade-off must be taken into consideration when designing automation and robotic systems. Automation is to be leveraged for tasks where human is unable to reliably, efficiently, or safely perform them. Task analysis in conjunction with functional allocation evaluations should determine the appropriate level of automation, and a trade analysis should be conducted to meet all the expected human-system performance.]

10.6.1.6 Automation Level Status Indication

[V2 10105] Operators of automated and robotic systems **shall** be provided with information on the status of the automation, including when the system changes between levels of automation.

[Rationale: The intent of this requirement is to ensure that operators are always able to ascertain the status of automated processes in an effort to maintain mode awareness. The operators need to be able to determine and affect what level of automation the system is operating in, as well as which processes are being automated. Analysis will determine cases where alerting may be required when automation takes control from human operators or switches to a higher level of automation. Evaluation of operator SA and mental models of

Downloaded from http://www.everyspec.com

automation while executing program-specific tasks should be included as part of the verification process.]

10.6.1.7 Robotic System Status

[V2 10106] Robotic assets **shall** interact with the operating crew in accordance with section 10.1.6, System Interaction, in this NASA Technical Standard such that the operator can determine the asset health, status, and place in a procedural sequence and the ability of the robotic asset to comprehend and accept operator commands.

[Rationale: The crew needs to have the constant ability to be aware of the status of a robotic asset to allow sufficient time for deliberate procedural modifications or emergency actions. Status information needs to include robotic asset health, past actions, confirming feedback to procedural modifications, and intended future actions.]

10.6.1.8 Robotic System Arbitration

[V2 10107] Robotic systems designed to have multiple operators **shall** be able to accept the input from and arbitrate between multiple operators so as to perform safely and without degradation.

[Rationale: Control of robotic systems may be performed by multiple groups that need to alternate control of the system within a given operating session, e.g., EVA and/or IVA crewmembers, lunar- /planetary-based operators, Earth-based operators. This transfer of control needs to (a) be accepted by these integrated systems, (b) occur in a safe manner such that it does not interfere with performance, and (c) occur without impeding upon the actions of the operators within or across groups. Design of controls should also allow the takeover of a robotic system from a primary operator by another operator/group in contingency or emergency situations.]

10.6.1.9 Automated and Robotic System Operation – with Communication Limitations

[V2 10108] Automated and robotic systems **shall** be capable of receiving and sending commands and performing tasks in the presence of a communication latency and intermittent transmission related to remote operations.

[Rationale: Automated and robotic systems need to be designed such that any delays associated with remote mission operations are accounted for to ensure efficient and effective performance. Automation should be sufficiently autonomous to function without continuous human supervision. Time delays between control inputs and system responses can cause problems, and mechanisms need to be in place to ensure that the system functions as expected. Consideration should be given to telerobotic software and hardware that may be required to operate robotic systems in the presence of such time delays, intermittent transmission of data, or when the operator and robot are not co-located.]

Downloaded from http://www.everyspec.com

10.6.1.10 Automation and Robotics Shut-Down Capabilities

[V2 10109] The crew **shall** be provided the ability to shut down automated and robotic systems.

[Rationale: The system is to allow the crew the ability to shut down automated or robotic systems if it is determined that these systems present a risk or are no longer providing the intended benefit. The crew is to remain in ultimate control of the vehicle at all times throughout a mission.]

10.6.1.11 Automation and Robotics Override Capabilities

[V2 10110] The crew **shall** be provided the ability to override automated and robotic systems.

[Rationale: The system is to allow the crew the ability to override automated or robotic systems if it is determined that these systems present a risk or if redirection of activities is needed. The crew is to remain in ultimate control of the vehicle at all times throughout a mission.]

10.6.1.12 Crew Interfaces to Robotic Systems - Spatial Disorientation

[V2 10111] Crew interfaces to robotic systems **shall** account for different frames of reference between the operator and the robot to minimize spatial disorientation and allow the crew to accomplish their tasks within the required performance parameters.

[Rationale: The frame of reference used for a human-robotic task is to be intuitive to the crew. Requirements are to accomplish this through specifying techniques such as matching of crew and robot frames of reference where appropriate or, at minimum, providing appropriate frame-of-reference labels and visual cues. In cases where the operator is to be immersed in the robot field of view, this would involve matching the robot frame of reference. Task efficiency (whether task time, accuracy, errors, or other relevant metrics) should not be degraded by lack of consideration of differing reference frames between robot and operator. For more information regarding this subject, see chapter 10, Crew Interfaces, of the HIDH.]

10.6.1.13 Crew Interfaces to Robotic Systems - Frames of Reference

[V2 10112] Crew interfaces to robotic systems **shall** be designed to enable effective and efficient coordination of or shifting between multiple frames of reference.

[Rationale: Coordination of or shifting between different frames of reference in a human-robotic task is to be intuitive to the crew, particularly when operating robotic arms. Requirements are to accomplish this through specifying techniques such as matching of crew and robot frames of reference or, at minimum, providing appropriate frame-of-reference labels and visual cues.]

Downloaded from http://www.everyspec.com

10.7 Information Management

10.7.1 Information Management Capabilities – Provision

[V2 10113] The information management system **shall** provide data critical to mission planning, mission operations, system maintenance, and system health and status at an appropriate level of detail to support effective and efficient crew performance.

[Rationale: The information management system is to provide all types of data needed by the crew to perform their tasks at the proper level of detail needed for each task in such a way that it is rapidly recognized and understood. The system should minimize requirements for making mental caculations or transformations and use of recall memory. Task analysis can help define data and level of detail needed for crew task performance.]

10.7.2 Caution and Warning

10.7.2.1 Visual and Audio Annunciations

[V2 10114] The information management system **shall** provide visual and audio annunciations to the crew for emergency, warning, and caution events.

[Rationale: Visual and audio annunciations are to be defined and provided for all levels of alerts. Annunciations are to have dual coding, e.g., be seen and heard, and are to be distinctive and identifiable. Audio annunciations can implement speech alarms as a way to provide information efficiently and lead to quick and accurate response times.]

10.7.2.2 Set-Point Alerts

[V2 10115] The system **shall** alert the crew if the selected set-points are outside safe limits.

[Rationale: A set-point is the target value that an automatic control system aims to reach. Two set-points, e.g., high and low set-points, define a range of values within which a system operates. The crew or ground personnel may be able to select set-points in an automatic control system. In the event that a set-point is changed to one that is outside the safe limit, the system will alert the crew that a change has been made that puts the set-point at an unsafe setting. The alert acts as a check to ensure that the crew intentionally made the change and reminds them that there is a hazard associated with a set-point in this range.]

10.7.2.3 Audio Annunciation Silencing

[V2 10116] The information management system **shall** provide a manual silencing feature for active audio annunciations.

[Rationale: The capability to manually silence any alarm is to be provided to the crew. Requirements are to prescribe a method of manual silencing that is intuitive, achievable from

Downloaded from http://www.everyspec.com

different locations within the cabin and during different flight phases, and consistent with any other manual silencing mechanisms.]

10.7.2.4 Visual and Auditory Annunciation Failures

[V2 10117] The information management system **shall** test for a failure of the visual and auditory annunciators upon crew request.

[Rationale: A mechanism is to be provided to allow the crew to independently test for a failure of the visual or auditory annunciation system. The mechanism is to consist of a control to initiate the test and some type of display to provide the results for the visual and auditory portions of the system.]

10.7.2.5 Visual Alerts - Red

[V2 10118] The color red **shall** be used as a visual indicator for the highest alert level.

[Rationale: In situations where there is a need to communicate information about the highest level of alert, the color red is to be used for the text and/or graphics.]

10.7.2.6 Visual Alerts - Yellow

[V2 10119] The color yellow **shall** be used as a visual indicator for the second highest alert level.

[Rationale: In situations where there is a need to communicate information about the second highest level of alert, the color yellow is to be used for the text and/or graphics.]

10.7.3 Information Management Capabilities

10.7.3.1 Information Management Methods and Tools

[V2 10120] The information management system **shall** provide methods and tools that allow the crew to effectively input, store, receive, display, process, distribute, update, and dispose of mission data.

[Rationale: The system is to provide the hardware and software architecture, including crew interfaces necessary, to manage all of the data in the information management system. Usability testing can help ensure that the information management methods and tools provided are easy to use and effective.]

10.7.3.2 Information Management Standard Nomenclature

[V2 10121] The information management system **shall** use standard nomenclature.

Downloaded from http://www.everyspec.com

[Rationale: Nomenclature throughout the information management system is to follow program standards or, at minimum, is consistent throughout the system. Standard nomenclature is most often ensured through specific program operations nomenclature standards.]

10.7.3.3 Information Management Compatibility

[V2 10122] The information management system **shall** be compatible with other systems within the spacecraft.

[Rationale: The information management system displays, controls, nomenclature, and user interfaces are to be consistent and compatible with other spacecraft systems. Requirements are to ensure that the systems work together successfully and efficiently to ensure task and mission success.]

10.7.3.4 Information Management Operation Rate

[V2 10123] The information management system **shall** operate at a rate that enables the crew to perform tasks effectively and efficiently, e.g., within acceptable error limits and scheduled operating times.

[Rationale: Response times that are too long prevent the crew from performing tasks effectively and efficiently; thus, minimal system response times are to be established for information management functions.]

10.7.3.5 Information Management Data Provision

[V2 10124] The information management system **shall** provide the crew with data to perform tasks at each workstation where those tasks are to be performed.

[Rationale: Design requirements are to specify which tasks are to be performed at which workstations and subsequently ensure that all task-relevant data be available at those workstations. Task analysis is to be performed to identify tasks and data needs.]

10.7.3.6 Information Management Security

[V2 10125] The information management system **shall** have features for the protection of sensitive and private data, transmission, secure viewing, and sender verification.

[Rationale: Data sensitivity and protection or handling measures are to be identified such that mechanisms for the protection of the data such as encryption or password protection can be put in place.]

Downloaded from http://www.everyspec.com

10.7.3.7 Information Management Ground Access

[V2 10126] The information management system **shall** allow for ground access to perform all onboard database functions without crew intervention.

[Rationale: Ground personnel are to have the capability to access and perform data management functions for all onboard data. Architecture is to be in place to support this as a ground-to-vehicle interaction, without crew participation. This access is to take the following into consideration: data protection, data transmission bandwidth, and—most importantly—visibility to the crew. Although the crew is not required to accomplish these ground-initiated functions, the crew is to be aware that the operations will occur, are presently occurring, or have taken place.]

10.7.3.8 Information Capture and Transfer

[V2 10127] The information management system **shall** provide a capability for the crew to capture and transfer information in a portable fashion.

[Rationale: The system is to provide the crew with the capability to transport information from a display to another location. Requirements are to specify techniques such as screenshots or digital downloads or captures to provide access to displayed information in locations where there is no permanent display device.]

10.7.3.9 Information Annotation

[V2 10128] The information management system **shall** provide a capability for annotation by the crew.

[Rationale: The capability to allow the crew to annotate data displays through techniques such as real-time markup capability, direct display modification, or hardcopy printing and redlining is to be provided by the system. Annotation capability provides documentation of changes to procedures or notes and tips from the crew that may be forgotten if left only as verbal commentary.]

10.7.3.10 Information Backup and Restoration

[V2 10129] The information management system **shall** provide for crew-initiated data backup and restoration for all mission data and automatic backup for critical data.

[Rationale: Measures such as data backups and data restores are to be in place to ensure that data are protected from accidental loss. Backups are to occur automatically for critical data that cannot be recreated; backups for less critical data are to be initiated on crew request, using standard user interface commands.]

Downloaded from http://www.everyspec.com

10.7.3.11 Alternative Information Sources

[V2 10130] The information management system **shall** provide alternative information sources for use in the event of the loss of the information management system.

[Rationale: In the event that the information management system becomes unavailable, the system needs to ensure that backup information sources are available for critical tasks, e.g., emergency procedures may have paper cue cards.]

10.7.3.12 Software System Recovery

[V2 10131] The information management system **shall** be rapidly recoverable from a software system crash.

[Rationale: In the event of a system failure, the information management software is to be sophisticated enough to be rapidly recovered. Additionally, the minimum time delay that is acceptable before the information management system becomes operational after a system crash is to be identified.]

11. SPACESUITS

Section 11 includes requirements that are specific to spacesuits and suited operations. Spacesuits provide a self-contained habitable environment that sustains human life and meets crew health, safety, and performance needs throughout suited mission durations. Suited activities (EVA or IVA) are an essential part of many human space missions. Accordingly, all spacesuit-applicable requirements are identified as being applicable to either EVA Spacesuits, Launch, entry and abort (LEA) Spacesuits, or both EVA and LEA Spacesuits. For the purposes of this NASA Technical Standard, the following definitions are used for LEA Spacesuit Systems and EVA Spacesuit Systems:

- *LEA Spacesuit System Definition: Any spacesuit system designed without an independent life support system and primarily for use during launch, entry, and abort phases of spaceflight, primarily to protect against toxic exposure, ebullism, hypoxia, and decompression sickness in the event of an unplanned cabin depressurization or toxic release into the cabin. It may also be worn during other dynamic phases of flight such as rendezvous and docking during which there is an increased risk of cabin depressurization due to cabin leaks. The duration for which LEA spacesuits are designed to operate will depend on mission scenarios and may range from a few hours to several days per use.*

- *EVA Spacesuit System Definition: Any spacesuit system designed to allow astronauts to perform tasks outside of a spacecraft or habitat. Performance of spaceflight EVA consists of placing a human in a micro-environment that provides all the life support, nutrition, hydration, waste, and consumables management function of an actual space vehicle, while allowing crewmembers to perform mission tasks. EVA spacesuits*

Downloaded from http://www.everyspec.com

are designed to be used for durations of less than a day due to potential human and suit system constraints. This includes all suited phases (e.g., prebreathe, leak checks, airlock depress).

For planetary exploration missions, crew access to the planetary surface within an EVA suit is fundamental to mission success and safety. Suited activities allow many aspects of mission science, exploration, and maintenance. Compliance with the requirements stated here is crucial to the health, safety, and performance of the suited crew. As described in section 3.1 and Appendix E, many other requirements in this NASA Technical Standard are also intended to be applicable to spacesuits; section 11 is a subset of requirements that are uniquely applicable to spacesuits and suited operations. Consult NASA-STD-3001, Volume 1, for EVA health and medical requirements. Consult EVA-EXP-0035, Exploration EVA System Compatibility document, for detailed guidance and constraints primarily concerned with safety, design of EVA support equipment, layout of EVA translation paths, and human-machine interfaces for crew operation. It is important for vehicle designers to understand and account for the interfaces between vehicle systems and spacesuits. Human system standards that require consideration of the suit: system interface are also identified in Appendix E.

11.1 Suit Design and Operations

11.1.1 Suited Donning and Doffing

[V2 11001] The system **shall** accommodate efficient and effective donning and doffing of spacesuits for both nominal and contingency operations.

[Rationale: Spacesuit donning and doffing is a non-productive activity. Plus, tedious and difficult tasks are more prone to neglect and human error. Finally, rapid donning can be critical in an emergency. System developers need to consider total system design and human accommodation, including emergency scenarios, assess donning task times, and evaluate features such as unassisted donning.]

Moved:

[V2 11002] Requirement moved to section 8.

Moved:

[V2 11003] Requirement moved to section 8.

Deleted:

[V2 11004] Requirement deleted.

Downloaded from http://www.everyspec.com

Moved:

[V2 11005] Requirement moved to section 8.

11.1.2 Suit Environment

11.1.2.1 Suit Pressure Set-Points

[V2 11006] The suit **shall** provide the capability for the crew to select discrete suit pressure set-points within the suit operating pressure ranges during pressurized and unpressurized suited operations.

[Rationale: To implement operational concepts possible in a variable pressure suit, the crew is to be able to select the desired discrete pressure setting.]

11.1.2.2 Suit Equilibrium Pressure

[V2 11007] Suits **shall** maintain pressure within 1.72 kPa (0.25 psi) after the suit has achieved an equilibrium pressure for a set-point.

[Rationale: Maintaining a constant pressure level after a set-point has been reached is important to protect the crew from discomfort in body cavities and sinuses, especially in the ear. Maintaining a constant pressure level is intended to protect the crewmember in the pressurized suit. Because of the relatively small total pressure volume in the suit, it is important that the pressurized-suited crewmember is exposed to a pressure set-point that is constant (unchanging). Excess fluctuations in suit pressure cause pressurized-suited crewmembers to constantly re-equilibrate pressure in body cavities and sinuses, which increases the likelihood of pressure-induced discomfort in these areas.]

Deleted:

[V2 11008] Requirement deleted.

11.1.2.3 Continuous Noise in Spacesuits

[V2 11009] Suits **shall** limit suit-induced continuous noise exposure at the ear to NC-50 or below without the use of auxillary hearing protection.

[Rationale: This requirement limits noise levels within the suit to allow for adequate voice communications and comfort. This requirement does not apply to alarms, communications, or to any noise experienced during maintenance activities. The noise attenuation effectiveness of hearing protection or communications headsets may not be used to satisfy this requirement unless they are included in the nominal suit configuration, i.e., not added to meet this requirement. Consideration is to be given to protect the frequencies necessary for communications transmission from ambient or suit-generated noise.]

Downloaded from http://www.everyspec.com

11.1.2.4 EVA Suit Radiation Monitoring

[V2 11010] The suit **shall** provide or accommodate radiation monitoring and alerting functions to allow the crew to take appropriate actions.

[Rationale: Radiation monitors are to provide primary data for controlling crew radiation exposures during EVA. The current exposure limits for deterministic effects (short-term exposure limits) are specified in NASA–STD-3001, Volume 1; and to demonstrate compliance, radiation monitoring is required.]

11.1.2.5 Suited Crewmember Heat Storage

[V2 11011] The system **shall** prevent the energy stored by each crewmember during nominal suited operations from exceeding the limits defined by the range 3.0 kJ/kg (1.3 Btu/lb) > ΔQ stored > -1.9 kJ/kg (-0.8 Btu/lb), where ΔQ stored is calculated using the 41 Node Man or Wissler model.

[Rationale: This requirement applies to nominal microgravity EVA operations, nominal surface EVA operations. Excess heat load and accumulation may quickly reach human tolerance limits and may impair performance and health. Impairment begins when skin temperature increases greater than 1.4 ºC (2.5 ºF) (0.6 ºC (1 ºF) core or if pulse is greater than 140 bpm. Increases in body core temperature may lead to associated performance decrements. Keeping the heat storage value below the performance impairment line allows the crew the ability to conduct complex tasks without heat-induced degradation. If the crewmember is in a suit, the heat load may increase rapidly. Supporting data from military aircrew protective ensembles suggest body temperature may increase more rapidly over time in suited crewmembers compared to those in a shirt-sleeve environment. The current change in heat storage limit is to allow nominal suited operations with crewmember metabolic rates of 528 to 2220 kJ/hr (500 to 2100 Btu/hr) without undue heat discomfort.]

Moved:

[V2 11012] Requirement moved to section 8.

11.1.3 Suit Waste Management

11.1.3.1 Suited Body Waste Management – Provision

[V2 11013] Suits **shall** provide for management of urine, feces, menses, and vomitus of suited crewmembers.

[Rationale: The total system is to be designed for body waste collection, as well as disposal of waste in the system's waste management system and cleaning of the suit for reuse. Waste management items are to be able to contain and dispose of human waste with as much

Downloaded from http://www.everyspec.com

containment and isolation as possible. Provisions are to be available for personal hygiene and suit cleaning.]

11.1.3.2 EVA Suit Urine Collection

[V2 11028] EVA suits **shall** be capable of collecting a total urine volume of V_u=0.5 +2.24t/24 L, where t is suited duration in hours.

[Rationale: This EVA suit requirement is separate from the LEA suit requirement above (V2 11014) to ensure that the increased EVA suit hydration (per V2 6036 specifying an additional 8 ounces ≈ 0.24 L per hour for EVA suited operations) is a design consideration for EVA suit urine collection. This straightforward input-output equation does not consider variables such as metabolic rate, relative humidity, or hydration, which could affect V. The voided urine is to be isolated to prevent inadvertent discharge in the suit that could result in injury to a crewmember's skin or mucous membranes or damage to the suit system.]

11.1.3.3 LEA Suit Urine Collection

[V2 11014] LEA suits **shall** be capable of collecting a total urine volume of V_u=0.5 + 2t/24 L throughout suited operations, where t is suited duration in hours.

[Rationale: This requirement allows crewmembers to eliminate liquid waste at their discretion without affecting work efficiency during suited operations. The suit is only responsible for the expected urinary output during the time that the crewmember is in the suit. The urinary collection system is to be capable of collecting all of the crewmember's output in succession, with an average void varying from 100 to 500 ml (3.4 to 16.9 oz). The rate of urinary delivery into the system from the body varies by gender (greater for females because of lower urethral resistance) but averages 10 to 35 ml/s (0.34 to 1.2 oz/s). Maximum flow rate with abdominal straining in a female may be as high as 50 ml/s (1.9 oz/s) for a few seconds. Output collection capacity is designed to match water input potential; the V_u equation does not consider variables such as metabolic rate, relative humidity, or hydration, which could affect total urine volume. The voided urine is to be isolated to prevent inadvertent discharge in the cabin that could result in injury to a crewmember's skin or mucous membranes or damage to equipment.]

11.1.3.4 Suit Urine Collection per Day - Contingency

[V2 11015] For contingency suited operations lasting longer than 24 hours, suits **shall** be capable of collecting and containing 1 L (33.8 oz) of urine per crewmember per day.

[Rationale: Urine output may be slightly greater or lower in various phases of the mission associated with g-transitions and fluid intake levels. Rarely, a single void might be as much as 1 L (33.8 oz), so the equipment is to be able to accommodate this maximum. Also, in the event of an unrecoverable vehicle pressure failure wherein an extended stay in the suit is used to maintain life, crewmembers are to have the capability to access fecal and urine collection systems. The voided urine is to be contained by the stowage and disposal hardware to prevent

Downloaded from http://www.everyspec.com

inadvertent discharge into the suit that could result in injury to the crewmember's mucous membranes or equipment.]

11.1.3.5 Suit Feces Collection per Day – Contingency

[V2 11016] During contingency suited operations, suits **shall** be capable of collecting 75 g (0.15 lb) (by mass) and 75 ml (2.5 oz) (by volume) of fecal matter per crewmember per day.

[Rationale: In the event of an unrecoverable vehicle pressure failure wherein an extended stay in the suit is used to maintain life, crewmembers are to have the capability to access fecal and urine collection systems. Fecal waste collection is to be performed in a manner that minimizes escape of fecal contents into the general suit environment during microgravity operations because of the high content of possibly pathogenic bacteria contained in the stool. In addition, there is the potential of injury to crewmembers and hardware that could result from such dissemination. EVA suits are to accommodate for fecal waste collection and containment during all suited activities. Suited activities are nominally not expected to exceed 10 hours. The waste quantities reflect the altered composition of the nutrition supplied during contingency suited operations and are characteristically low in residue.]

11.1.3.6 Suit Isolation of Vomitus

[V2 11017] Suits **shall** provide a means for the isolation of vomitus from the crewmember's face.

[Rationale: SAS has affected crewmembers in the first 72 hours of flight. The crew is nominally suited during the first 72 hours of flight for certain dynamic phases; vomiting in the suit may occur at these times or if a contingency EVA occurs within that time frame. On the planetary surface, a high magnitude SPE could result in exposures that produce prodromal nausea and vomiting. If vomitus enters the internal suit environment, it should be kept away from the suited crewmember's naso-pharyngeal space. Uncontrolled accumulation of vomitus may also interfere with a crewmember's vision.]

11.1.4 Suit Vision

11.1.4.1 Suited Field of Regard

[V2 11018] Suits **shall** provide a field of regard sufficient to allow the crewmember to accomplish required suited tasks.

[Rationale: To enhance work efficiency index and mission success, the visor is to have minimal interference with nominal visual acuity. The visor is to promote an adequate field of view to perform ground, IVA, and EVA tasks and prevent tunnel vision. Suit designers need to consult with vehicle designers.]

Downloaded from http://www.everyspec.com

11.1.4.2 Suit Helmet Optical Quality

[V2 11019] Suit helmets **shall** have sufficient optical qualities to allow the crewmember to accomplish required suited tasks.

[Rationale: To enhance work efficiency index and mission success, the visor is to have minimal interference with nominal visual acuity. The visor is to minimize haze, discoloration, and fog.]

11.1.4.3 Suit Helmet Luminance Shielding

[V2 11020] Suit helmets **shall** provide protection to suited crewmembers from viewing objects with luminance that could prevent successful completion of required suited tasks.

[Rationale: Individual tasks or crewmembers may require or desire higher or lower lighting levels than that provided for other tasks or crewmembers.]

11.1.4.4 Suit Helmet Visual Distortions

[V2 11021] Suit helmets **shall** be free from visual distortion.

[Rationale: To enhance mission success, vision through a suited crewmember's helmet is to be free of visual distortion.]

11.1.5 Suit Helmet Displays

[V2 11022] Suit helmet field of regard **shall** be unencumbered if helmet- or head-mounted displays are provided.

[Rationale: To enhance mission success, vision through a suited crewmember's helmet is to have minimal interference with nominal visual acuity. Inclusion of any display in the helmet is to promote an adequate field of regard to perform ground, IVA, and EVA tasks and prevent tunnel vision.]

11.1.6 Suit Information Management

[V2 11023] The system **shall** allow the crew to effectively input, store, receive, display, process, distribute, update, and dispose of relevant information on consumable levels, suit status and alerts, and biomedical data.

[Rationale: Feedback of relevant suit atmospheric and physiologic information to the crew allows better consumable management, improves optimization of EVA task performance, and reduces risk of physiologic stress/injury. Having insight into trends in physiological parameters and life-sustaining consumables allows the IVA or EVA crew to act prospectively in preventing unsafe operating conditions or responding to off-nominal scenarios. This requirement may be met by integrated systems with the details of each system's responsibility defined in individual

Downloaded from http://www.everyspec.com

System Requirements Documents (SRDs) and in Information Requirements Documents (IRDs). Where feasible, it may be desirable for ground medical support to see biomedical telemetry during contingency and mission-preserving EVA, as well as during unrecoverable vehicle pressure loss, to ensure the health and safety of the crew. These data will also be monitored during nominal lunar surface operations to ensure the health and safety of the crew, although automated suit algorithms may be the primary method rather than ground medical support. Derived body core temperature and heart rhythm (real time) are desired for microgravity operations, and derived body core temperature is desired for lunar operations. Note that crew may refer to the suited crewmember, the intravehicular crew, or ground crew. The recipients of the data should be defined by the program or project. Relevant information should be determined through task analysis.]

11.2 Suited Functions

11.2.1 Suit Mobility, Dexterity, and Tactility

11.2.1.1 Ability to Work in Suits

[V2 11024] Suits **shall** provide mobility, dexterity, and tactility to enable the crewmember to accomplish suited tasks within acceptable physical workload and fatigue limits while minimizing the risk of injury.

[Rationale: Suited crewmembers are to be able to perform tasks required to meet mission goals and operate human-system interfaces required for use during suited operations. Suits can limit the crew mobility, dexterity, and tactility below that of unsuited crew. Suit pressurization can further reduce crew capabilities.]

11.2.2 Nutrition

11.2.2.1 Suited Nutrition

[V2 11025] The system **shall** provide a means for crew nutrition in pressure suits designed for surface (e.g., moon or Mars) EVAs of more than 4 hours in duration or any suited activities greater than 12 hours in duration.

[Rationale: Additional nutrients, including fluids, are necessary during suited operations as crewmember energy expenditure is greater during those activities. Additional kilocalories, based on metabolic energy replacement requirements from moderate to heavy EVA tasks, allow the crewmember to maintain lean body weight during the course of the mission. Lean body (especially muscular) weight maintenance is a key component of preserving crew health during the missions and keeping performance at a level required to complete mission objectives. Nutritional supply during suited operations allows the crewmembers to maintain high performance levels throughout the duration of the EVA. Apollo astronauts strongly recommended the availability of a high-energy substance, either liquid or solid, for consumption during a surface EVA. During contingency microgravity EVAs and/or for EVAs less than 4 hours

Downloaded from http://www.everyspec.com

in duration, this capability is not required. During long-duration suited operations such as an unplanned pressure reduction scenario, the crew is to be able to consume nutrition from an external source to maintain crew performance.]

11.2.3 Drinking Water

Deleted:

[V2 11026] Requirement deleted.

11.2.3.1 LEA Suited Hydration

[V2 11029] The system **shall** provide a means for on-demand crew hydration while suited, including a minimum quantity of potable water of 2 L per 24 hours for the LEA suit.

[Rationale: Potable water is necessary during suited operations to prevent dehydration caused by perspiration and insensible water loss, as well as to improve crew comfort. LEA-suited hydration has to be available both while suited and unpressurized as well as suited and pressurized. Having the potable water system be rechargeable from an external source is acceptable as long as the suit system has sufficient capacity to allow on-demand ready access to water at crew-discretion without impacting work efficiency. During long-duration LEA-suited operations such as an unplanned pressure reduction scenario, the crew is to be able to consume water from an external source to prevent crew performance degradation associated with dehydration.]

11.2.3.2 EVA Suited Hydration

[V2 11030] The system **shall** provide a means for on-demand crew hydration while suited, including a minimum quantity of potable water of 240 ml (8 oz) per hour for EVA suited operations.

[Rationale: Potable water is necessary during suited operations to prevent dehydration caused by perspiration and insensible water loss, as well as to improve crew comfort. Having the potable water system be rechargeable from an external source is acceptable as long as the internal suit reservoir has sufficient capacity to allow ready access to water without impacting work efficiency. Hundreds of microgravity EVAs have been performed using a 32-oz in-suit drink bag, but this alone does not meet the minimum recommendations for hydration during moderate activity. Factors that may affect an individual's hydration needs include body size, sweat rates, thermal environment, humidity, and metabolic rate. Given the wide range of differences between people and EVA characteristics, 8 oz/hour is the minimum recommendation to cover most applications. During surface EVAs, crewmembers will most likely be suited for 10 hours, including approximately 7 hours expending energy on the lunar surface. Apollo astronauts strongly recommended the availability of an appropriate quantity of water for consumption during a lunar EVA. Specifically, Apollo astronauts recommended the availability of 237 ml (8 oz) per hour of water for consumption during a lunar EVA, with water available for

Downloaded from http://www.everyspec.com

contingency scenarios such as a 10-km walk-back in case of rover failure. The intent of this requirement is for the suit system to have sufficient capacity to allow on-demand ready access to water at crew-discretion without impacting work efficiency.]

11.2.4 Medication

11.2.4.1 Suited Medication Administration

[V2 11027] The system **shall** provide a means for administration of medication to a suited, pressurized crewmember for pressurized suited exposures greater than 12 hours.

[Rationale: As a contingency, administration of medication from an external source to a suited crewmember may be required at a time in which it is not possible to doff the suit, e.g., during an unplanned pressure reduction scenario. Medication and administration method designs are to be integrated into suit design.]

11.2.5 Relative Humidity

11.2.5.1 Suited Relative Humidity

[V2 11031] For suited operations, the system **shall** limit RH to the levels in Table 22, Average Relative Humidity Exposure Limits for Suited Operations.

[Rationale: Average humidity is to be maintained above the lower limits stated to ensure that the environment is not too dry for the nominal functioning of mucous membranes. During low humidity exposures, additional water is to be provided to the crew to prevent dehydration. Humidity is to be maintained below the upper limits for crew comfort to allow for effective evaporation and to limit the formation of condensation. Excess moisture in the glove can contribute to trauma at the fingertips.]

Table 22 — Average Relative Humidity Exposure Limits for Suited Operations

Average RH	Time Allowed
RH ≤ 5%	1 hr
5% < RH ≤ 15%	2 hr
15% < RH ≤ 25%	8 hr
25% < RH ≤ 75% (nominal range[1])	Indefinite[2]

1. Nominal humidity range is included for completeness.
2. Assumes temperature is within nominal range in accordance with section 6.2.4.2, Temperature Range [V2 6013], in this NASA Technical Standard.

11.3 LEA Suited Decompression Sickness Prevention Capability

[V2 11032] LEA spacesuits **shall** be capable of a minimum of 40 kPa (5.8 psia) operating pressure to protect against Type II decompression sickness in the event of a cabin depressurization.

Downloaded from http://www.everyspec.com

[Rationale: LEA spacesuits are worn inside spacecraft to protect crewmembers in the event of contingencies such as contamination or depressurization of the spacecraft cabin. Protection against serious life-threatening (Type II) DCS in the event of an unplanned rapid cabin depressurization depends on providing adequate suit pressure to crewmembers because there is no opportunity for oxygen prebreathe or immediate post-event treatment. Based on best available data and computational models, LEA spacesuit pressure of 40 kPa (5.8 psia) will limit the probability of Type II DCS occurrence to less than 15% for a rapid depressurization.]

11.4 Suited Atmospheric Control

[V2 11033] The suit **shall** allow the suited crewmembers and remote operators to adjust the suit thermal control system.

[Rationale: The ability to control suited atmospheric conditions is important for crew health and comfort, and for mission tasks, to ensure efficient and effective performance. Temperature can be adjusted in a number of ways depending on the suit and vehicle system designed (e.g., changing water flow, inlet temperature.]

11.5 Suited Atmospheric Data Recording

[V2 11034] Systems **shall** automatically record suit pressure, ppO_2, and $ppCO_2$.

[Rationale: Access to atmospheric data is needed for suit systems, as each of these parameters is critical to crew health and comfort. Additionally, the ability to view past recorded data helps to prevent suited environmental conditions that could harm the crew or suit system and can aid in the effort to troubleshoot problems. ppO_2 can be directly measured or calculated indirectly and recorded. Recording of thermal comfort variables may be useful.]

11.6 Suited Atmospheric Data Displaying

[V2 11035] Suits **shall** display suit pressure, ppO_2, and $ppCO_2$ data to the suited crew.

[Rationale: These atmospheric parameters are critical to human health and comfort, and access to this atmospheric data needs to be provided to the crew. The crew needs to view the environmental status in real time to help prevent environmental conditions that could harm them or the suit system. The implementation of the display is addressed by various requirements in section 10 of this NASA Technical Standard.]

11.7 Suited Atmospheric Monitoring and Alerting

[V2 11036] Suits **shall** monitor suit pressure, ppO_2, and $ppCO_2$ and alert the crew when they are outside safe limits.

[Rationale: Systems are to be capable of monitoring the atmosphere to identify when parameters are outside set limits so that the system can alert the crew and the crew can take

Downloaded from http://www.everyspec.com

appropriate actions to maintain health and safety. See sections 10.3.4, Audio Displays, and 10.7.2, Caution and Warning, in this NASA Technical Standard for additional information. Note that crew may refer to the suited crewmember, the intravehicular crew, or ground crew. The recipients of the data should be defined by the program or project. Monitoring and alerting of thermal comfort variables may be useful.]

11.8 Suited Metabolic Rate Measurement

[V2 11037] The system **shall** measure or calculate metabolic rates of suited EVA crewmembers.

[Rationale: Real-time monitoring during EVA is a current medical requirement and provides awareness of exertion level, including whether or not exertion levels are above or below normal for a particular crewmember and task.]

11.9 Suited Metabolic Rate Display

[V2 11038] The system **shall** display metabolic data of suited EVA crewmembers to the crew.

[Rationale: Metabolic data are important indicators of human health and performance, and access to these data needs to be provided to the crew. The crew needs to view the metabolic information in real time to provide awareness and potential adjustment of exertion level, including whether or not exertion levels are above or below normal for a particular crewmember and task. Note that crew may refer to the suited crewmember, the intravehicular crew, or ground crew. The recipients of the data should be defined by the program or project.]

11.10 Nominal EVA Spacesuit Carbon Dioxide Levels

[V2 11039] The EVA spacesuit **shall** limit the inspired CO_2 partial pressure (P_ICO_2) in accordance with Table 23, EVA Spacesuit Inspired Partial Pressure of CO_2 (P_ICO_2) Limits.

[Rationale: Spacesuit design (flow rate, helmet shape, etc.) and crewmember metabolic rates (average and transient) affect the extent to which CO_2 accumulates inside a spacesuit and is inspired by crewmembers. Inspired CO_2 partial pressure levels in Table 23 are based on review of scientific literature combined with past EVA experience, prescribed standardized human-in-the-loop testing, suit inlet CO_2 of < 2 mmHg, and suit ventilation utilized in heritage designs. Verification methods would utilize the standardized testing method as published in ICES-2018-15, Bekdash, et al., July 2018. TBR – Additional publications are pending that will further detail the testing methodology and analysis techniques.]

Note: Off-nominal CO_2 values are not included within this NASA Technical Standard due to the unique circumstances of each mission (expected human performance, duration of exposure, access to medical care, etc.) and would be derived as a lower level program/project requirement.

Downloaded from http://www.everyspec.com

Table 23—EVA Spacesuit Inspired Partial Pressure of CO_2 (P_ICO_2) Limits †

P_ICO_2 (mmHg)	Allowable Cumulative Duration (hours per day)
$P_ICO_2 > 15.0$	Do Not Exceed
$12.5 < P_ICO_2 \leq 15.0$	≤ 0.5
$10.0 < P_ICO_2 \leq 12.5$	≤ 1.0
$7.0 < P_ICO_2 \leq 10.0$	≤ 2.5
$4.0 < P_ICO_2 \leq 7.0$	≤ 7.0
$P_ICO_2 \leq 4.0$	≤ 14.0

The requirements in Table 23 are to be met in the presence of the expected average and transient metabolic rates for the full suited duration, including prebreathe, checkout, EVA, and repressurization time. Total duration in the suit is not to exceed 14 hours.

† The values in Table 23 are based on Shuttle and ISS EVA experience, representing a frequency of up to 4 EVAs over a 14-day mission or up to 5 EVAs during a 6-month mission. If additional frequency of EVAs beyond the existing experience base is required, monitoring of crewmembers for hypercapnic signs and symptoms will be necessary until a sufficient experience base is generated.

12. GROUND ASSEMBLY DESIGN AND EMERGENCY EGRESS OPERATIONS

This section focuses on the design of spaceflight systems, hardware, and equipment that are accessed, used, or interfaced in some way by personnel other than just the spaceflight crews (e.g., ground support personnel) and ground emergency egress operations.

12.1 Ground Assembly Design

This section focuses on the design of spaceflight systems, hardware, and equipment that are accessed, used, or interfaced in some way by personnel other than just the spaceflight crews (e.g., ground support personnel). Spaceflight systems include those systems that support crew launch, orbit, return, and recovery. Ground support personnel perform numerous tasks utilizing spaceflight systems, hardware, and equipment at times other than during spaceflight such as during ground operations before launches and after landings. Improper performance of tasks and/or improper use of hardware and equipment by the ground support personnel could lead to loss of mission (LOM) or loss of crew (LOC) of the spaceflight crew.

The requirements in this section ensure that the capabilities and needs of the ground processing crew are considered during the design and development of the flight system along with ensuring that the flight system is not compromised during the assembly, test, and operational phases.

Downloaded from http://www.everyspec.com

The requirements listed in Section 12.1 apply only to the design and development of flight systems interfaced by ground support personnel at integration, launch, landing, and recovery sites. These requirements are optional for designs at manufacturing and development sites.

12.1.1 System Assumptions

[V2 12003] Each human spaceflight program **shall** document the system support design and environment:

a. Work environment (e.g., lighting, heating, atmosphere, gravity).
b. Tools and support equipment.
c. Ground support personnel characteristics (e.g., size, training, experience, number, physical and cognitive capabilities, skills).

[Rationale: A separate support system (i.e., facilities, equipment, personnel, procedures) is required to support the spaceflight system. The two systems have to work together so that the spaceflight system can achieve its performance goals. The spaceflight system developer may not be in control of the support system; but in order to properly design the spaceflight system, the developer has to have a clear understanding of the support system, including its functions and users.]

12.1.2 Ground Support Personnel Accommodation

12.1.2.1 Anthropometry, Biomechanics, Range of Motion, and Strength

[V2 12004] Each program **shall** identify an anthropometry, biomechanics, range of motion, and strength data set for the ground support population to be accommodated in support of all requirements in this section of this NASA Technical Standard.

[Rationale: Ground support personnel anthropometry, reach, biomechanics, range of motion, and strength need to be defined for the program in a data set. Ground support personnel data sets may represent different populations than spaceflight crew. Existing data sets found in the HIDH can be used; but if not, applicable new data sets may need to be developed. Systems need to accommodate the physical capabilities and limitations of ground support personnel to allow for required servicing, maintenance, assembly, testing, or operational use by ground support personnel (e.g., rescue, flight test, special docking). Systems architecture and vehicle layout and tasks should not force ground support personnel to move, twist, or stretch into awkward positions. Tasks that require awkward positioning can increase the likelihood of errors or injury.]

12.1.2.2 Protective Equipment

[V2 12005] The system **shall** accommodate ground personnel protective equipment and attire.

[Rationale: The design has to accommodate for ground personnel functions constrained or increased by protective equipment or combinations of such (e.g., pressurized or unpressurized suits, breathing hoses or air packs, gloves, fall protection harnesses, masks, hats or helmets, sensors, cords). Protective equipment often limits human capabilities (e.g., visual envelope, range of motion, reach envelope, audio, communication, grasp) and often increases personnel

Downloaded from http://www.everyspec.com

work volumes or quantity of personnel anticipated (e.g., pressurized suited tasks often require a minimum of two personnel and air packs or hoses). Design factors for audio, communication, displays, and control systems should accommodate for face, ear, and/or hand protection (e.g., larger knobs, increased volume, larger tactile surfaces, resistive touchscreens). Integrated task analysis has to be performed to identify designs or functions that may be affected by protective equipment or attire. Physical characteristics of protective equipment need to be provided to designers so the protective equipment can be accommodated in system design.]

12.1.2.3 Volume Accommodation

[V2 12006] The system **shall** provide the volume necessary for the ground support personnel to perform all ground processing tasks using the required tools and equipment.

[Rationale: The physical work envelopes have to accommodate full or partial access for the expected number of ground support personnel, equipment required to perform the task, and any associated protective equipment. The volume has to accommodate body, work, reach, visual, tool, and protective equipment envelopes to accomplish the task. The physical work envelopes of doors, hatches, and entryways should consider further volumetric restrictions imposed by ground processing, including door/hatch masses and hinges, if captive, actuators, or other entry mechanisms along with air ducts, cords, sensors, protective covers, safety equipment, portable lighting, and potential mechanical assist devices (e.g., personnel and equipment entry platforms, lift devices). For safe passage, timeliness, and to prevent collateral damage, hatches and ingress/egress openings have to be large enough for the ground support personnel to pass safely and efficiently in situations involving suited personnel, transporting equipment or hardware through the opening, emergency or contingency operations, or incapacitated personnel rescue.]

12.1.2.4 Ground Processing – Induced Forces

[V2 12007] Systems, hardware, and equipment **shall** be protected from or be capable of withstanding forces imposed by the ground support personnel or GSE, in a 1 G environment.

[Rationale: Either by vehicle design (preferred) or through other means (e.g., labels, placard, cover, training, walking platforms, procedures), the spaceflight system needs to be protected from the forces imposed by ground support personnel (and their associated equipment) while performing vehicle tasks. Furthermore, any accessible items that could be inappropriately used such as handles, steps, handrails, or mobility aids should either be designed to withstand the forces imposed by the ground support personnel or be clearly labeled as a keep-out zone. Historical experience with Shuttle and ISS has shown that it is important to make it clear which parts of a vehicle may not be used as handles, steps, or handrails so that ground support and spaceflight crews do not inadvertently damage delicate portions of the vehicle. Preference should be given to designing to support in areas where ground support and spaceflight crews will travel frequently.]

Downloaded from http://www.everyspec.com

12.1.2.5 Systems Accessibility

[V2 12008] System components, hardware, and/or equipment that requires ground support personnel inspection or interaction **shall** be accessible.

[Rationale: Ground support personnel have to be able to access system components, hardware, or equipment that requires inspection or interaction. Consideration needs to be given for type of access and inspection (e.g., physical and visual) needed for each component, hardware, and equipment during vehicle design. Proximity and envelope required for the access and inspection is defined by the function.]

12.1.2.6 Tool Clearance

[V2 12009] The system **shall** provide tool clearances for tool installation and actuation for all tool interfaces during ground processing.

[Rationale: The required tool clearance for fit and actuation is to be determined and applied to the design of hardware. Consideration needs to be given to type of tool, the user's hand action, the tool's motion envelope and forces needed, the user population hand anthropometric data, adjacent equipment, the inclusion and use of appropriate shields/guards/gloves, and the need for tool tethering when determining the minimum clearance dimensions.]

12.1.3 Hardware and Software Design to Support Ground Operations

12.1.3.1 Flight Hardware Differentiation

[V2 12010] Flight system components that have the same or similar form but different functions **shall** be readily identifiable, distinguishable, and not be physically interchangeable.

[Rationale: Components requiring installation (including but not limited to LRU) that are not interchangeable functionally will not be interchangeable physically. This requirement addresses installation of a component in the wrong location. While some installable units may be used for the same function in multiple instances (e.g., redundant strings), many may be physically similar but functionally distinct. In such cases, installation in the wrong location could result in damage to the hardware or to the system into which it is inserted. This requirement is intended to preclude such installation in the wrong location. In addition to differentiation, labeling to show distinctions should be applied.]

12.1.3.2 Hardware Protection

[V2 12011] The system **shall** provide a means of protecting flight hardware and equipment from damage during ground processing.

[Rationale: Equipment that can reasonably sustain damage during ground processing should have a means of being protected during ground operations (e.g., window covers, wire covers, propulsion line covers).]

Downloaded from http://www.everyspec.com

12.1.3.3 Mobility Aids

[V2 12012] The system **shall** provide mobility aids to support expected ground support personnel tasks.

[Rationale: Mobility aids such as hand holds allow ground support personnel to safely and efficiently move from one location to another, preventing inadvertent damage to equipment. Required tasks will need to be determined by task analysis, which will include the identification of mobility aids.]

12.1.3.4 Equipment Handling Design

[V2 12013] All items designed to be carried, supported, or removed and replaced **shall** have a means for grasping, handling, and carrying.

[Rationale: This requirement is intended to avoid damage to flight hardware and to prevent injury to ground support personnel. Items that are unable to be reasonably moved may incur injury to ground support personnel or damage to the flight systems if handled inappropriately. Flight items that have to be moved may be damaged if handled inappropriately. Damage to flight hardware and injury to the ground support personnel can result from poor grips on a non-handle protrusion or from protrusions that do not hold the weight of the hardware. Non-handle protrusions can break and lead to dropping flight hardware. Handles or handholds need to be designed to support the weight of the hardware, any lifting mechanisms, accommodate bare or gloved hands where appropriate, be non-slip, and/or be clearly labeled.]

12.1.3.5 Inadvertent Operation Prevention

[V2 12014] The system **shall** be designed to prevent inadvertent operation of controls during ground processing.

[Rationale: The system needs to be designed to preclude inadvertent operation. For example, accidental activation by contact can be prevented by the use of guards, covers, and physical separation from other controls. Accidental activation of commands can be prevented with an "arm-fire" mechanism. Two-step commanding allows for ground support personnel confirmation before completing critical, hazardous, or destructive commands. Controls need to be spaced to prevent inadvertent actuation of adjacent switches. For example, hard plastic, molded covers may be placed over contact-sensitive items, covers placed over adjacent switches, or metal foot and handholds may be added to assure only applicable steps are executed.]

12.1.3.6 Incorrect Installation Prevention

[V2 12015] System hardware and equipment **shall** be designed to prevent incorrect mounting or installation.

[Rationale: This requirement is intended to assure that fasteners are inserted in the correct holes, brackets are attached in the correct location, connectors are installed in the correct position, and so forth. Improperly mounting equipment during ground processing will result in

Downloaded from http://www.everyspec.com

unsafe conditions for spaceflight crews, and increase the risk of LOC/LOM events through damage to hardware or changes in configuration during launch and ascent. Physical features to prevent incorrect mounting or installation largely prevent these situations. Examples of physical features include supports, guides, size or shape differences, fastener locations, and alignment pins. Physical features are the first line of defense for preventing such errors. In addition to physical features, labeling or marking mitigates human error. Visual indication might include any marking on or adjacent to the hardware/equipment interface, labels, or color coding that provides information about mounting. Unique labeling of hardware/equipment provides an indication that the item to be mounted and the mounting location match. Labels provide contextual information to help assure that the ground support personnel do not attempt to install a hardware item incorrectly; such an attempt could damage the hardware or the interfaces on the vehicle.]

12.1.3.7 Pre-Defined Tool Set

[V2 12016] The system **shall** be designed to be assembled, prepared for launch, maintained, and reconfigured using a pre-defined set of standard tools and lesser set of any pre-established set of specialized tools.

[Rationale: Establishing a minimal set of tools for pre- and post-mission processing of flight hardware requires integration across spaceflight systems, hardware, and equipment designs. The goal is to have an integrated set of tools (across systems or programs) that can be used for all ground processing tasks, using common tools wherever possible. Defined toolsets would reduce the number and types of tools and subsequently reduce the number and types of fasteners. Minimizing the variations and quantity within the tool set reduces training time, processing time, potential damage to hardware and injury to personnel, and decreases the chance of using the wrong tool for the work. System designs and tool determinations should accommodate tool reach, grasps, and volumes of ground personnel populations, tool motions, and any concurrent flight system component volume needed around the tool use. For example, designs should account for tools being used by one person while adjacent personnel assist in securing the weight or positioning of a removable or tested component. Tool grasps, weights, tethering, and clearance may also be affected by varying postures needed for access or visibility. Integrated task analyses should be performed to support use of common tools or determine where specialized tools may need to be pre-defined.]

12.1.3.8 Captive Fasteners

[V2 12017] Fasteners on installable units **shall** be captive.

[Rationale: A captive fastener is one that is automatically retained in a work piece when it is not performing its load-bearing job. Captive fasteners for maintenance, assembly, integration, and processing tasks, therefore, do not require ground support personnel to restrain and store them during task performance, and can more easily be installed with one hand, reducing task times and reducing the chance of fastener loss. Dropped fasteners could become Foreign Object Debris (FOD), which pose a risk during the mission. They can cause injury, impact launch schedule, and damage equipment.]

Downloaded from http://www.everyspec.com

12.1.3.9 Ground Processing Without Damage

[V2 12018] The system **shall** be designed for assembly, testing and checkout, troubleshooting, and maintenance that prevents damage to other components.

[Rationale: Damage to certified flight components will cause costly recertification and may impact the launch. This requirement is intended to limit such damage and recertification by maintaining a flight configuration for all systems that are not part of the maintenance activity and providing mitigation strategies when possible. To define the necessary accommodations for maintenance without damage, an integrated task analysis has to be performed for each maintenance activity. Methods that have been successfully used to preclude damaging other components during maintenance include the following: (1) routing cables to prevent mechanical damage, pinching by doors, or twisting; (2) protecting against inadvertent actuation; and (3) implementing provisions for components that are susceptible to abuse or those frequently used.]

12.1.3.10 Replaceable Items

[V2 12019] The system **shall** locate maintenance items so that a planned ground processing (e.g., corrective or preventive maintenance) task does not require the deintegration or demating of other systems or components.

[Rationale: Deintegration of certified flight components will cause costly recertification if disturbed. This requirement is intended to limit damage and recertification by maintaining a flight configuration of all systems and providing mitigation strategies when possible. Corrective maintenance is limited to LRUs, whereas preventive maintenance is a planned maintenance activity (e.g., battery replacement). To define the necessary accommodations for maintenance without damage, an integrated task analysis has to be performed for each maintenance activity.]

12.1.3.11 Visual Access for Ground Processing

[V2 12020] The system **shall** provide direct line-of-sight visual access to all flight system components requiring inspections or other human-system interactions, except self-mating connectors, on which ground processing is performed by ground personnel.

[Rationale: Direct line-of-site visual access reduces the likelihood of human error that can occur when blind (by feel) operations or operations requiring the use of specialized tools (e.g., mirrors or bore scopes) are performed. The addition of obstructions from the hands, tools, equipment, PPE (e.g., gloves, protective suits), corrective lenses, and the components or cabling needs to be considered during the line-of-sight operation. Reliance on just the "feel" of the hardware introduces human error variances. A self-mating connector is a connector that, when two pieces of hardware slide into place, they automatically self-mate. See section 12.1.3.5, Connectors.]

12.1.3.12 Lighting

[V2 12021] The system **shall** provide lighting to perform ground processing tasks in the vehicle.

Downloaded from http://www.everyspec.com

[Rationale: Lighting is required to ensure that the ground support personnel can adequately view the hardware/equipment associated with the task. Flight lighting may serve this dual-purpose. Additionally, this may require an integrated solution, utilizing the flight vehicle and ground equipment providers. Lighting or illumination types, levels, controls, selection, and design factors should accommodate general assembly or bench work tasks down to extra fine precision while accounting for lux or lumen levels, shadow prevention, indirect and direct glare mitigations, color temperature, brightness adjustability, dark adaptation, color rendering, and lighting color techniques (e.g., red flood, low-color temperature, bright markings (foot-lamberts)). Variations in operating conditions such as natural sunlight, artificial lighting, or filtering also have to be considered.]

12.1.3.13 Supplemental Systems

[V2 12022] The system **shall** be designed to support any supplemental systems that are required to assist ground support personnel when an assigned task cannot reliably, safely, or effectively be performed by ground support personnel alone.

[Rationale: Tasks that cannot be reliably, safely, or efficiently performed by the ground support personnel are to be identified. In those cases, supplemental systems (such as GSE) will need to be accommodated in design. This may include providing attach points for GSE, rails, tracking or removal guides, and/or accommodation of ground support lighting.]

12.1.3.14 Operational Consistency

[V2 12023] The system **shall** be designed for consistent operation across ground processing tasks.

[Rationale: The intent of this requirement is to ensure commonality and consistency across flight systems. This will facilitate learning and minimize interface-induced ground support personnel error. Examples include consistent use of control direction ("on" is always "up"), "closed" direction is always the same (right), consistent use of a release mechanism, terminology, markings, color coding, etc.]

12.1.3.15 Restraints and Platforms

[V2 12024] The system **shall** accommodate restraint and platform placement that ensures the optimum reach and work envelope of the suited or unsuited ground support personnel for the required tasks.

[Rationale: Restraints and platforms are intended to keep personnel from falling (or related hazards), allow for hardware access, and protect the hardware from inadvertent ground support personnel collision. Design of these items needs to consider placement of the ground support personnel and required reach and work volumes for tasks.]

12.1.3.16 System Feedback

[V2 12025] The system **shall** provide feedback to the operator indicating successful task completion.

Downloaded from http://www.everyspec.com

[Rationale: Feedback can include visual indication, audible click, handle position, bolt height, alert, etc. Feedback at task completion is important to prevent continual inputs into the system, which may lead to damage to the system. For example, when filling a tank, feedback that the tank is full is important to prevent overfilling, which may result in human injury or hardware/equipment damage. If system feedback is not possible, another means of feedback is necessary (i.e., GSE). For example, if the system does not provide indication of a full tank, the equipment used to fill the tank should provide the feedback.]

12.1.3.17 Stowage Access

[V2 12026] The system **shall** provide access for ground support personnel to spacecraft stowage volumes that require late loading and early unloading of items.

[Rationale: Ground personnel are responsible for any 'late loading' of items such as fresh food, pharmaceuticals, experiment items with short lifetimes that need to be placed onboard the spacecraft. Similarly, 'early access' items need to be retrieved off the spacecraft within a short time after landing. Regular unloading requires waiting until the spacecraft returns to the processing facility, which could be weeks later. The intent of this requirement is to allow the ground support personnel to perform these access operations safely without disruption to the spaceflight crew or spacecraft and minimize deintegration.]

12.1.3.18 Flight Software Systems

[V2 12027] The system **shall** allow the ground support personnel safe operation of flight software systems for ground processing.

[Rationale: Ground support personnel may be required to access flight software systems during ground operations tasks. Therefore, it is critical for flight software systems to have a mode or configuration for safe operation by ground support personnel.]

12.1.4 Safety

12.1.4.1 Sharp Edge and Burr Injury Prevention

[V2 12028] The system **shall** protect ground support personnel from injury resulting from sharp edges and burrs.

[Rationale: Protection of ground support personnel from injury controls ground operations costs. In those areas that the ground support personnel would access for ground processing and maintenance, the design should protect them from burrs, sharp edges, and sharp corners. Support personnel may have an additional risk that system hardware may be in a more exposed configuration during maintenance or installation/removal operations. The intent of this requirement is for a design solution, not an operational solution, since the latter results in expensive recurring costs. The requirement might be met by rounding of edges and corners, sanding burrs, or by designing flight structure that hides sharp edges and corners and burrs from ground personnel during planned operations. It cannot be met by design of remove-before-flight protective structure.]

Downloaded from http://www.everyspec.com

12.1.4.2 Pinch Point Prevention

[V2 12029] The system **shall** be designed to protect ground personnel from injury due to pinch points.

[Rationale: A pinch point can cause injury to ground personnel or damage to hardware if not protected. Pinch points may exist for the nominal function of equipment (i.e., equipment panels), but need to be covered or protected during ground operations. Injury may be avoided by locating pinch points out of the reach of the ground personnel or providing guards to eliminate the potential to cause injury.]

12.1.4.3 Hazard Controls

[V2 12030] The system **shall** be designed to prevent unnecessary exposure of ground support personnel and equipment to hazards, including spills, electrical shocks, and the release of stored energy.

[Rationale: Ground support personnel should not be exposed to hazards unnecessarily. Spill hazards can be avoided by capturing the spill or by adding extensions to the flight vehicle to relocate the hose to flight connection away from the vehicle. Electrical exposure can be avoided by shielding, interlocks, and de-energizing electrical stored energy. Interlocks should not be the sole mean of de-energizing electrical circuits of equipment and are not substitutes for lockout and tag-out procedures and practice.]

12.1.4.4 System Safing for Ground Operations

[V2 12031] The system **shall** alert and allow ground personnel to safe the system before performing any ground operation.

[Rationale: Elements or systems have to provide methods for system safing during ground assembly and maintenance activities to protect the system, hardware, and equipment from damage or personnel from injury. To ensure all areas in which a method should be in place for system safing, an integrated task analysis has to be performed. The system has to alert ground personnel of unsafe conditions. To safe or unsafe a system, a combination of mechanical actuation (physical lockout) with corresponding indicators (tagout means) should allow ground personnel to engage or disengage the system while informing personnel of safe or unsafe conditions (e.g., flashing or steady lights of various colors, distinct audio alarms, positive locking engagements, other status indicators using multiple modalities). Safing or unsafing mechanisms and controls have to be accessible to ground personnel for safe and timely execution. Methods that have been successfully used as controls for system safing include physical protection, interlocks, software disabling or multiple key combinations, cut-out switches, warning placards, and guards.]

12.1.4.5 Contaminaton Controls

[V2 12032] Ground support operations **shall** prevent the introduction of contaminants to the flight vehicle.

Downloaded from http://www.everyspec.com

[Rationale: Elements or systems cannot release hazardous or non-hazardous materials into the spaceflight system during maintenance activities. Controls have to be designed to prevent contamination.]

12.1.4.6 Containment of Fluids and Gases

[V2 12033] The system **shall** provide for containment and disposal of the inadvertent release of fluids and gases into the flight system.

[Rationale: This can be accomplished by isolating, draining, or venting pressurized fluids. System developers are to identify the containment points and create isolation capabilities. The control valves are to be located near those service points to avoid control errors.]

12.1.4.7 Safe Weight Limit

[V2 12034] Hardware and equipment installed or removed by ground support personnel without ground support equipment **shall** be less than a safe weight limit.

[Rationale: Handling of hardware and equipment that is too heavy can result in injury or damage to the equipment (e.g., dropped hardware). NIOSH has published a lifting equation, designed to determine a recommended weight limit for safely lifting loads. It accounts for factors that would affect a person's ability to lift, including the position of the load relative to the body, the distance lifted, the frequency of lifts, and the coupling (gripping) method. These various factors need to be accounted for while determining safe weight limits for the ground support personnel during assembly, processing, and maintenance tasks. Other factors such as obstructions, surrounding environment, the carefulness needed in placing an object should also be considered in design.]

12.1.4.8 Safe Flight System Component Arrangement

[V2 12035] Flight system components **shall** be designed, arranged, or located to prevent hazards, interference, or errors during concurrent ground processing tasks.

[Rationale: Hardware, personnel, software, and/or automation could interact in such a way during concurrent tasks as to create undesired outcomes. For example, crossing cables during installation may lead to inadvertent forces on those cables which may cause problems in flight. The system and components should provide a means of damage detection by inspection or test and a means to recover. Consequences of errors on safety or system performance should be made clear. Placing items in view on system mold lines, rather than stacked or hidden, can provide visual indicators of damage or interferences. Obtaining a test failure should indicate the isolated area of the fault, and the system should provide physical and visual means to the affected area. For pneumatic systems, clear sight glasses have been incorporated showing mechanical indicators to clearly identify performance flow or inoperability. In software or instrumentation, system status windows with conditional indicators for online, offline, optimal, or off nominal, can provide means of detecting the failure or damage in time to recover before flight.]

Downloaded from http://www.everyspec.com

12.1.5 Connectors

12.1.5.1 Connector Design and Spacing

[V2 12036] Connectors **shall** be designed and spaced to allow for accurate, damage-free mating and demating by ground support personnel.

[Rationale: Connectors need to be grasped firmly for connecting and disconnecting. The clothing, gloves, equipment, and PPE worn by the ground support personnel during the task have to be considered in design.]

12.1.5.2 Connector Incorrect Mating Prevention

[V2 12037] Connectors **shall** be designed to prevent incorrect mating and mismating.

[Rationale: Connector similarity could lead to inadvertent mismating, which is the mating of a male plug to the wrong female jack. Mismating can damage pins or mechanisms, or even (once powered or filled with fluids) lead to personnel injury or equipment damage. Incomplete electrical connector mating can result in short circuits or open circuits. Incomplete fluid connector mates, especially in pressurized systems, can result in unexpected and possibly hazardous fluid release. Physical features such as color coding, different size connectors, connector keying, and tactile feedback can help ensure proper installation. Connector savers can be used to reduce the probability of extensive rework caused by high repetition of mating/demating or the possibility of mismating. Labels can help to identify which connector plug is intended to be mated with which jack, as well as proper orientation for mating.]

12.1.6 Labels

These requirements ensure that the design and placement of labels allow users to locate and identify controls and human interfaces, to interpret and follow procedures, or to avoid hazards. Labels may include permanent labels, placards, etchings, engravings, part markings, decals, ink-stamped labels, engraved labels, or silk-screened labels.

12.1.6.1 Label Provisions

[V2 12038] Labels and placards **shall** be provided for the ground support personnel to identify items, interpret and follow procedures, and avoid hazards.

[Rationale: Ground support personnel interface items have to have identifiers (labels) to aid in assembly, maintenance, test, and checkout operations. Labels for ground support personnel interfaces help prevent ground processing mishaps, process escapes, and human errors. Labels need to be positioned so it is intuitive which item is being identified. Labels reduce memory load and improve accuracy of tasks. This includes, but is not limited to, identification of emergency equipment and procedures, safe weight limits, and hazards identification.]

Downloaded from http://www.everyspec.com

12.1.6.2 Label Standardization

[V2 12039] Labels and placards **shall** be consistent and standardized throughout the system.

[Rationale: Systems, hardware, and equipment that are intended to be used by ground support personnel and the spaceflight crew need to employ standardized nomenclature, label formats, coding, language, measurement units, and icons in concordance with the space vehicle system.]

12.1.6.3 Label Content

[V2 12040] The content of labels and placards **shall** be of sufficient size, color contrast, and character height and style to support readability.

[Rationale: Labels and placards need to be readable at the intended viewing distance. Designers need to consider the distances at which the labels and placards are expected to be viewed, any worn PPE, and the lighting conditions in which the labels and placards will be viewed.]

12.1.6.4 Readable Label Positioning

[V2 12041] Labels and placards **shall** be located such that they are readable by the operator, considering ambient lighting conditions.

[Rationale: Labels and placards need to be readable in the normal operating position. Designers need to consider the lighting conditions for the operation of the hardware and make sure the labels are readable, given the task demands.]

12.1.6.5 Non-obstructive Labels

[V2 12042] Labels, placards, or part markings used for ground processing **shall** not visually or operationally interfere with spaceflight crew interface labeling.

[Rationale: Spaceflight crew interface flight labeling has to take precedence over ground labeling to ensure safe flight operations. Interference with the flight labeling by ground labeling can cause confusion for the spaceflight crew. When and where possible, the ground labeling should not be visible to the crew in-flight.]

12.2 Emergency Egress Operations

The capability for ground support personnel emergency egress and access to medical care during ground processing, preflight, and post-flight is critical to ensure the safety and health of ground and spaceflight crews. Note these requirements augment the requirement in NPR 8705.2, section 3.6.1.1, that requires the space system to provide the capability for unassisted crew emergency egress to a safe haven during Earth prelaunch activities.

Downloaded from http://www.everyspec.com

12.2.1 Emergency Egress at the Launch Site

[V2 12043] The system **shall** be designed such that the spaceflight crew and ground support personnel can egress within the time required to preserve the health and safety of all spaceflight crew and ground support personnel in the event of an emergency.

[Rationale: Spaceflight crew egress may require the assistance from ground support personnel, and ground support personnel may need to egress due to emergencies during processing. Ground support personnel wearing protective clothing need to be accommodated, in addition to the spaceflight crewmember wearing an ascent/entry suit during emergency egress scenarios. Ground support protective clothing may include a bulky backpack and airtank. Egress scenarios need to be evaluated to adequately configure the egress paths in the design.

12.2.2 Emergency Egress to Medical Care

[V2 12044] The system **shall** be designed to ensure spaceflight crew and ground support personnel can egress to a location providing advanced pre-hospital life support.

[Rationale: Egress systems primarily relocate personnel to a safe location. Upon an emergency egress, it is likely that medical care will be needed. An egress system that delivers personnel to a location that provides advanced pre-hospital life support is important to prevent delayed medical treatment.]

12.2.3 Nominal Timely Egress

[V2 12045] Following a post-mission nominal landing, launch scrub, or abort scenario, crew egress from the system **shall** be expedited to ensure crew health.

[Rationale: Environmental, safety, and health considerations may necessitate expedited egress. For the well-being of all crewmembers, it is necessary to expedite egress. For example, it is possible that one or more crewmembers may experience health issues following a re-adaptation to Earth's gravity. In addition, following a launch scrub/mission abort, vehicle troubleshooting may be required quickly after crew egress.]

12.2.4 Emergency Egress Acceleration Limits

[V2 12046] For ground emergency egress systems, the system **shall** limit the magnitude and direction of crew exposure to accelerations according to ASTM F2291-16, Standard Practice for Design of Amusement Rides and Devices, Section 7, Acceleration Limits. (TBR)*

[Rationale: Emergency Egress Systems should provide and maintain a level of system safety sufficient to permit routine use of the system in crew training operations while ensuring that safety measures do not adversely affect the performance of the system during its intended use in emergency scenarios. Human tolerance levels and stability under acceleration vary broadly depending on the axes of acceleration, restraint type, duration, and condition of the subjects. The limits in this standard represent safe levels of translational acceleration and start

Downloaded from http://www.everyspec.com

and stop changes in acceleration or jerk for the human. Exposure to acceleration above these limits could cause injury.

** This standard may be revised based on tailoring of the ASTM F2291-16, Standard Practice for Design of Amusement Rides and Devices, to be more specific to human spaceflight parameters.*

Downloaded from http://www.everyspec.com

APPENDIX A

REFERENCE DOCUMENTS

A.1 Purpose and/or Scope

This Appendix provides guidance made available in the reference documents listed below.

A.2 Reference Documents

A.2.1 Government Documents

Department of Defense

	The U.S. Navy Treatment, Table 6, Oxygen Treatment of Type II Decompression Sickness
MIL-HDBK-1908	Definitions of Human Factors Terms
MIL-STD-1474, most current revision	Department of Defense Design Criteria Standard, Noise Limits

Federal

	Precautions and the order of testing before entering confined and enclosed spaces and other dangerous atmospheres, 29 U.S.C. §1915.12(a)(2), March 28, 2017
OMB Circular No. A-119	Federal Participation in the Development and Use of Voluntary Consensus Standards and in Conformity Assessment Activities, as revised January 27, 2016, at Federal Register Vol. 81, No. 17, page 4673, accessible at https://obamawhitehouse.archives.gov/sites/default/files/omb/inforeg/revised_circular_a-119_as_of_1_22.pdf

NASA

	Clarke, J.M. Oxygen Toxicity (Chapter 6). In: The Physiology and Medicine of Diving (4th ed), Bennett, P.B., Elliott, D.H. (eds). W.B. Saunders Company Ltd: Philadelphia, 1993, pp. 153-69)
	Deliberations of the Exploration Atmospheres Working Group (EAWG), 2006

Downloaded from http://www.everyspec.com

	Human Exploration and Operations Mission Directorate (HEOMD) memo, Exploration Atmospheres, February 2013
	Nutrition Requirements, Standards, and Operating Bands for Exploration Missions, December 2005. Johnson Space Center, Scott M. Smith
EC-09-154	Bue, Grant C., Lyndon B. Johnson Space Center Memorandum, Tolerable Limit for Hand Skin Temperatures in Glove Tests, November 3, 2009
EVA-EXP-0035	Exploration EVA System Compatibility
SA-12-067	Level II Johnson Space Center (JSC) Chief Medical Officer (CMO) Health and Medical Technical Authority (HMTA) Position on Potential Atmospheres for Exploration, August 8, 2012
JSC-28918	EVA Design Requirements and Considerations
JSC-39116	EMU Phase VI Glove Thermal Vacuum Test and Analysis Final Report, Doc. #CTSD-SS-1621, NASA Johnson Space Center, August 20, 1998
JSC-63414	Spacecraft Water Exposure Guidelines (SWEGs)
JSC-63557	Net Habitable Volume Verification Method
JSC Interpretation Letter MA2-99-142	On-Orbit Boarding and Grounding
JSC Interpretation Letter MA2-299-170	Mate/Demate
JSC Interpretation Letter TA-94-029	Electrical Shock
NASA/SP-2010-3407	Human Integration Design Handbook (HIDH)
	https://www.nasa.gov/sites/default/files/atoms/files/human_integration_design_handbook_revision_1.pdf

Downloaded from http://www.everyspec.com

NASA/SP-6105, most current revision	NASA Systems Engineering Handbook
NASA/TM-2007-214755	The Apollo Medical Operations Project: Recommendations to Improve Crew Health and Performance for Future Exploration Missions and Lunar Surface Operations
NASA/TM-2008-215198	The Use of a Vehicle Acceleration Exposure Limit Model and a Finite Element Crash Test Dummy Model to Evaluate the Risk of Injuries during Orion Crew Module Landings
NASA/TM-2013-217380	Application of the Brinkley Dynamic Response Criterion to Spacecraft Transient Dynamic Events
NASA-TN-D-5153	The use of pilot rating in the evaluation of aircraft handling qualities
NASA/TP-2015-218578	Final NASA Panel Recommendations for Definition of Acceptable Risk of Injury due to Spaceflight Dynamic Events
NASA/TP-2014-218556	Human Integration Design Process (HIDP)
NPD 1000.3	The NASA Organization
NPD 8900.5	NASA Health and Medical Policy for Human Space Exploration
NPR 7120.7	NASA Information Technology and Institutional Infrastructure Program and Project Management Requirements
NPR 7123.1, most current revision	NASA System Engineering Processes and Requirements
NPR 8715.3	NASA General Safety Program Requirements
SSP 50260	International Space Station Medical Operations Requirements Document (MORD)
MSFC Form 4657	Change Request for a NASA Engineering Standard

Downloaded from http://www.everyspec.com

A.2.2 Non-Government Documents

Biegelmeir, G. New knowledge of the impedance of the human body. Proceedings of the First International Symposium on Electrical Shock Safety Criteria. (1985) Bridges J.E., Ford, G.L., Sherman, I.A., Vainberg, M. (Eds). pp 115-132. Pergamon, New York

Chatterjee, I., Wu, D., and Gandhi, O. P. Human Body Impedance and Threshold Currents for Perception and Pain for Contact Hazard Analysis in the VLF-MF Band. IEEE Transactions on Biomedical Engineering, BME-33(5): 486-494, 1986

Cooper, G.E., and Harper, R. P., Jr. The Use of Pilot Rating in the Evaluation of Aircraft Handling Qualities. North Atlantic Treaty Organization Advisory Group for Aerospace Research and Development (Organisation du Traite de l'Atlantique Nord). Ames Research Center, Moffett Field, CA. Cornell Aeronautical Laboratory, Buffalo, NY. April 1969

Defrin, R., Shachal-Shiffer, M., Hadgadg, M., Peretz, C. (2006). Quantitative Somatosensory Testing of Warm and Heat-Pain Thresholds: The Effect of Body Region and Testing Method. Clinical Journal of Pain, Vol 22, No.2, pp. 130-136

Freiberger R. The Electrical Resistance of the Human Body to Commercial Direct and Alternating Currents. Trans. Allen Translation Service. Maplewood, New Jersey: Bell Laboratories, 1934

Greene, L.C., Alden, J.C., and Hardy, J.D. Adaptation to Pain. Federation Proc. 17: 60, 1958

Downloaded from http://www.everyspec.com

Handbook of Acoustical Measurements and Noise Control, 3rd edition. (1997). C.M. Harris (Ed.) p. 16.8. McGraw-Hill, New York. p. 16.8

Harris, C.M., (1998). *Handbook of Acoustical Measurements and Noise Control* (3rd ed.). C.M. Harris (Ed.) Acoustical Society of America, Woodbury, NY. Harris (1997)

Havenith, G., van de Linde, E.J.G., Heus, R. (1992). Pain, thermal sensation and cooling rates of hands while touching cold materials. European Journal of Applied Physiology; 65: 43–51

Infrasound and Low-Frequency Sound. Proceedings of the 2001 American Conference of Governmental Industrial Hygienists, Threshold Limit Values (TLVs). Documentation of the Threshold Limit Values for Physical Agents. ACGIH@ Worldwide. Cincinnati, OH, pp. 1-15

Lloyd-Smith, D.L., and Mendelssohn, K. (1948).Tolerance limits to radiant heat. British Medical Journal, p. 975

Moritz, A.R., and Henriques, F.C. (1947). Studies in Thermal Injury II. The Relative Importance of Time and Air Surface Temperatures in the Causation of Cutaneous Burns. American Journal of Pathology, 23:695-720

Meilgaard, M., Civille, G.V., and Carr, B.T. Sensory Evaluation Techniques, 3rd ed. Boca Raton, FL: CRC Press, 1999 (pages 165-166, 243)

Noise and Vibration Control Engineering - Principals and Applications. (1992). L.L. Beranek and I.L. Vér (Eds.) pp 685-720. John Wiley and Sons

Onnusch, Wicken, Li, and Manzey, 2013.

Downloaded from http://www.everyspec.com

Provins, K.A., and Morton, R. (1960). Tactile discrimination and skin temperature. Journal of Applied Physiology; 15: 155–60

Petitjean, A., et al. (2015). Normalization and Scaling for Human Response Corridors and Development of Injury Risk Curves. Accidental Injury: Biomechanics and Prevention. N. Yoganadan, A. Nahum and J. Melvin. New York, Springer Science+Business Media: 769-792]

Taylor, R.J. Body impedance for transient high voltage currents. Proceedings of the First International Symposium on Electric Shock Safety Criteria. (1985) Bridges, J.E., Ford, G.L., Sherman, I.A., Vainberg, M. (Eds). pp 251-258. Pergamon, New York

ACGIH — Threshold Limit Values (TLVs®), Infrasound and Low-Frequency Sound, 2001

ICDM DMS 1.0 — International Committee on Display Measurement Metrology (ICDM), Display Measurement Standard (DMS 1.0), available from Society for Information Display (SID). www.sid.org (June 1, 2009)

ICES-2018-15 — Validation of Inspired Carbon Dioxide Measurement Methods in the Extravehicular Mobility Unit Space Suit, 48th International Conference on Environmental Systems, July 2018, Albuquerque, New Mexico, Bekdash, et al.

IEC 60601-1 — Medical Electrical Equipment – Part 1: General Requirements for Basic Safety and Essential Performance. Third Edition. International Electrotechnical Commission, Geneva, Switzerland, December, 2005

IEC TR 60479-5 Edition 1.0 — Effects of current use on human beings and livestock

Downloaded from http://www.everyspec.com

IEC TR 60479-5 Edition 1.0	Effects of current use on human beings and livestock – Part 5: Touch voltage threshold values for physiological effects
ISO 2631-1:1997	Mechanical vibration and shock – Evaluation of human exposure to whole-body vibration – Part 1: General requirements
ISO 9241-210	Ergonomics of human-system interaction — Part 210: Human-centered design for interactive systems
VESA FPDM 2.0	Video Electronics Standards Association (VESA) Flat Panel Display Measurements (FPDM) Standard Version 2.0 (June 1, 2001), www.vesa.org

Downloaded from http://www.everyspec.com

APPENDIX B

ACRONYMS, ABBREVIATIONS, AND SYMBOLS

This Appendix provides guidance, made available in the acronym, abbreviation, and symbol definitions listed below.

~	approximately
β	beta, injury risk criterion
°	degree
Δ	delta (change)
=	equal
>	greater than
≥	greater than or equal to
<	less than
≤	less than or equal to
-	minus
μ	mu, micro
μm	micrometer
Ω	omega, ohm
%	percent
+	plus
±	plus or minus
θ	theta, angle of incidence
A	ampere
A/m	ampere per meter
AC	alternating current
ACGIH	American Conference of Governmental Industrial Hygienists
AGARD	Advisory Group for Aerospace Research and Development
ALARA	as low as reasonably achievable
ANSI	American National Standards Institute
APP	applicable
B/W	black and white
BEI	biological exposure index (indices)
BET	Blur Edge Time
bpm	beats per minute
Btu	British thermal unit
C	Celsius
cal	calorie
CCT	Correlated Color Temperature
cd	candela
CDO	cognitive deficit onset
CFU	colony forming unit

Downloaded from http://www.everyspec.com

CIE	International Commission on Illumination
cm	centimeter
cm^2	square centimeter
CMO	Chief Medical Officer
C_n	minutes of noise exposure
CO_2	carbon dioxide
COAS	Crew Optical Alignment System
CQS	Color Quality Scale
CRI	Color Rendering Index
D	noise dose
dB	decibel
dBA	decibels, A-weighted
DC	direct current
DCS	decompression sickness
deg	degree
DMS	Display Measurement Standard
DNA	deoxyribonucleic acid
DRM	Design Reference Mission
E	perceptual distance between colors
	electric field strength
EAWG	Exploration Atmospheres Working Group
ECG	electrocardiogram
ECLSS	Environmental Control and Life Support System
EER	estimated energy requirements
EMU	extravehicular mobility unit
EOM	end of mission
EPA	Environmental Protection Agency
EVA	extravehicular activity
F	Fahrenheit
f	frequency
f_G	frequency in gigahertz
f_M	frequency in megahertz
FFRDC	Federally Funded Research and Development Center
FOD	Foreign Object Debris
FPDM	Flat Panel Display Measurements
ft	foot, feet
G	gravitational constant
g	gram
	gravity (gravity equals 9.8 m/s^2)
gal	gallon
GCR	galactic cosmic ray
GET	Gaussian Edge Time
GHz	gigahertz
GSE	Ground Support Equipment
GUI	graphical user interface

Downloaded from http://www.everyspec.com

H	magnetic field strength
HDBK	handbook
HEA	human error analysis
HeNe	helium-neon
HEOMD	Human Exploration and Operations Mission Directorate
HEPA	high efficiency particulate air
HIDH	Human Integration Design Handbook
HIDP	Human Integration Design Processes
HMTA	Health and Medical Technical Authority
HQR	Handling Qualities Rating
hr	hour
HSIP	Human Systems Integration Plan
HUD	head's up display
Hz	Hertz
ICDM	International Committee on Display Metrology
IEC	International Electrotechnical Commission
IEEE	Institute of Electrical and Electronics Engineers
in	inch
IRD	Information Requirements Document
ISO	International Organization for Standardization
ISS	International Space Station
IVA	intravehicular activity
J	Joule
JPR	Johnson Procedural Requirements
JSC	Johnson Space Center
k	kilo
kcal	kilocalorie
kg	kilogram
kHz	kilohertz
kJ	kilojoule
km	kilometer
kPa	kilopascal
L	liter
LADTAG	Lunar Atmosphere Dust Toxicity Assessment Group
lb	pound
LEA	Launch, entry and abort
LEO	low Earth orbit
LiOH	lithium hydroxide
L_n	sound level of a noise exposure event in dBA
LOC	loss of crew
LOM	loss of mission
LRU	Line Replacement Unit
m	meter
m^3	cubic meter
mA	milliampere

Downloaded from http://www.everyspec.com

ma	maximum current
Max	maximum
mg	milligram
MHz	megahertz
MIL	Military
min	minute
ml	milliliter
mm	millimeter
MMH	monomethylhydrazine
mmHg	millimeter of mercury
MORD	Medical Operations Requirements Document
MPE	maximum permissible exposure
ms	millisecond
MSFC	Marshall Space Flight Center
N	number of noise exposure events in a 24-hour period
N_2	Nitrogen
N/A	not applicable
NASA	National Aeronautics and Space Administration
NC	noise criterion
	normal condition
NEMA	National Electrical Manufacturers Association
NHV	Net habitable volume
NIOSH	National Institute for Occupational Safety and Health
nm	nanometer
NPD	NASA Policy Directive
NPR	NASA Procedural Requirements
NTO	nitrogen tetroxide
O_2	oxygen
OMB	Office of Management and Budget
OSHA	Occupational Safety and Health Administration
oz	ounce
Pa	Pascal
PA	potentially applicable
PDA	personal digital assistant
PEL	permissible exposure limit
P_ICO_2	inspired carbon dioxide partial pressure
P_IO_2	inspired oxygen partial pressure
pp	partial pressure
$ppCO_2$	partial pressure of carbon dioxide
PPE	Personal Protective Equipment
ppO_2	partial pressure of oxygen
psi	pound(s) per square inch
psia	pound(s) per square inch absolute
Q	heat
rad/s^2	radians per second squared

Downloaded from http://www.everyspec.com

REID	risk of exposure-induced death
RF	radio frequency
RH	relative humidity
RMS	root mean square
rpm	revolutions per minute
s	second
S	power density
SA	situational awareness
SAS	space adaptation syndrome
SCAPE	Self-Contained Atmospheric Protective Ensemble
SDS	Safety Data Sheet
sec	second
SI	International System of Units
SIL	speech interference level
SMAC	spacecraft maximum allowable concentration
SP	special publication
SPE	solar particle event
SPL	sound pressure level
SRD	System Requirements Document
SSP	Space Station Program
STD	Standard
SWEG	spacecraft water exposure guideline
TBR	to be revised
TLV	threshold limit value
TLX	Task Load Index
TM	technical memorandum
T_n	maximum noise exposure duration allowed
TP	technical publication
TWA	time-weighted average
U.S.	United States
u'v'	uniform-chromaticity scale (CIE 15.2, Colorimetric 2nd ed. Commission International d l' Cellarage, Vienna Austria 1986)
V	Volt
V/m	volt(s) per meter
V2	Volume 2 (in designating numbered requirements)
VESA	Video Electronics Standards Association
VOC	volatile organic compound
V_u	urinary output volume
W	watt
W/m	watt(s) per meter
W/m^2	watt(s) per meter squared
wtd	weighted
y	year

Downloaded from http://www.everyspec.com

APPENDIX C

DEFINITIONS

This Appendix provides guidance, made available in the definitions listed below.

Activity Center: A specific location uniquely configured for a human activity such as personal hygiene, body waste, food, sleep, trash, stowage, and exercise countermeasures.

Acute Field of View: The region of visual angle in which acuity remains at least half its maximum. It is about 3 degrees in diameter.

Advisory: A message that indicates a safe or normal configuration, indicates safe or normal operation of essential equipment, or imparts information for routine action purposes.

Affect: Observable behavior that represents the expression of a subjectively experienced feeling state (mood, morale). Common examples of affect are sadness, fear, joy, and anger. The normal range of expressed affect varies considerably between different cultures and even within the same culture.

All Mission Systems: Includes terrestrial ground control centers, other spacecraft on an occupied planetary body, other orbiting spacecraft, and other locations onboard a spacecraft.

Anthropogenic: Induced or altered by the presence of humans.

Anthropometry: The science of measuring the human body and its parts and functional capabilities. Includes lengths, circumferences, body mass, etc.

Attenuation: Diminution in force or intensity of sound.

Automatic: Pertaining to a function, operation, process, or device that, under specified conditions, functions without intervention by the crew.

Automation: (1) The implementation of a process by automatic means. (2) The theory, art, or technique of making a process more automatic. (3) The investigation, design, development, and application of methods of rendering processes automatic, self-moving, or self-controlling.

Biomechanics: The study of the principles and relationships involved with muscular activity.

Blur Edge Time (BET): A measure of the amount of motion blur on an electronic display, especially liquid crystal display. This metric is defined in ICDM-DMS 1.0.

Downloaded from http://www.everyspec.com

Body Referenced Interfaces: Interfaces that are controlled by the dynamic movements of the human body such as virtual environments.

Broad Spectrum: A spectrum or list of a sufficient number of target compounds anticipated from all expected off-nominal events.

Capability: Having attributes (such as physical or cognitive) required for performance.

Catastrophic: (1) A hazard that could result in a mishap causing fatal injury to personnel and/or loss of one or more major elements of the flight vehicle or ground facility. (2) A condition that may cause death or permanently disabling injury, major system or facility destruction on the ground, or loss of crew, major systems, or vehicle during the mission (NPR 8715.3, NASA General Safety Program Requirements).

Caution: Notification of an event that needs attention but not immediate action.

Clear Viewing Aperture: The area of a window that is not covered by the window assembly frame or other structure that would block incident light rays.

Cognitive: Pertaining to the mental processes of perception, learning, memory, comprehension, judgment, and reasoning.

Color Discrimination: The ability to distinguish between pairs of colors that span the space of colors under standard viewing conditions. The International Commission on Illumination (CIE) has defined ΔE units that specify the perceptual distance between colors.

Communication Systems: Communication systems include information provided to and from the crew by way of voice, text, video, and/or telemetry.

Contamination: The act of rendering unfit for use by the introduction or deposition of unwholesome or undesirable, usually foreign, elements.

Contingency: An off-nominal situation that is identified in the hazard analysis process and has a preplanned response to mitigate the risks to crew and/or vehicle.

Continuous Noise: Noise that exists in a steady state for durations of more than 8 hours in a 24-hour period. Typical continuous sources of noise include environmental control equipment and avionics equipment (e.g., fans, pumps, ventilation systems).

Countermeasures: A means to offset undesirable physical, physiological, and psychological effects of spaceflight on humans.

Crewmember: Human onboard the vehicle or habitat during a mission.

Crew Station: A location in a vehicle or habitat where crewmembers perform an activity.

Downloaded from http://www.everyspec.com

Critical: A condition that may cause severe injury, occupational illness, or major property damage to facilities, systems, or flight hardware (NPR 8715.3); also of essential importance, vital, or indispensable as in "critical" design parameters. Frequently used in this NASA Technical Standard to cover both "critical" (as defined above) and "catastrophic."

Decompression: The act or process of reduction of pressure, as occurs when releasing compressed air from a vehicle or habitat to the vacuum of space.

Decompression Sickness: A sickness induced by too rapid a decrease in atmospheric pressure sufficient to cause bubbles to form from gases (normally nitrogen (N_2)) dissolved in blood and other body tissues.

Deconditioned Crew (deconditioning): Decreased functionality of physiological systems, e.g., musculoskeletal, cardiovascular, vestibular, and nervous systems, related to adaptation to reduced gravity.

Diffuse Reflectance: The fraction of incident electromagnetic radiation such as light or other type of wave within a specified wavelength band that is reflected from a surface uniformly in all directions, regardless of the angle of incidence of the incident waves or rays. A truly diffusely (Lambertian) reflective surface has the same luminance (appears to have the same brightness) from all viewpoints, regardless of the direction of the source relative to the surface. This type of reflection is associated with matte or "flat" surface treatments on objects and is contrasted with specular reflectance. Most surfaces exhibit a combination of specular and diffuse reflectance.

Display: Anything that provides visual, auditory, and/or haptic information to crewmembers, e.g., label, placard, tone, or display device. The term "display" includes text-based user interfaces, as well as Graphical User Interfaces (GUIs).

Display Device: The hardware used to present visual, aural, and tactile information to the crew or ground operations personnel. Display devices include computer monitors and Personal Digital Assistants (PDAs).

Doorway: An opening with an operable cover (such as a door) that separates two adjoining volumes and allows physical passage of people and/or material from one volume to the other.

Effective Masked Threshold: The level of auditory danger signal just audible over the ambient noise, taking account of the acoustic parameters of both the ambient noise in the signal reception area and the listening deficiencies (hearing protection, hearing loss, and other masking effects). The method for calculating the masked threshold is given in ISO 7731:2003(E) Annex B.

Downloaded from http://www.everyspec.com

Error: Either an action that is not intended or desired by the person or a failure on the part of the person to perform a prescribed action within specified limits of accuracy, sequence, or time that does not produce the expected result and has led or has the potential to lead to an unwanted consequence.

Emergency: Time-critical event that requires immediate action and crew survival procedures.

Emergency Equipment: A set of components (hardware and/or software) used to mitigate or control hazards, after occurrence, which present an immediate threat to the crew or crewed spacecraft. Examples include fire suppression systems and extinguishers, emergency breathing devices, and crew escape systems (NPR 8705.2).

Emergency Only Controls: Controls that are only used during emergencies, e.g., eject, abort.

Equipment: Items such as tools used to accomplish a task or activity.

EVA Spacesuit System: Any spacesuit system designed to allow astronauts to perform tasks outside of a spacecraft or habitat. Performance of spaceflight EVA consists of placing a human in a micro-environment that has to provide all the life support, nutrition, hydration, waste, and consumables management function of an actual space vehicle, while allowing crewmembers to perform mission tasks. EVA spacesuits are designed to be used for durations of less than a day due to potential human and suit system constraints. This includes all suited phases (e.g., prebreathe, leak checks, airlock depress).

Extravehicular Activity: Operations performed by suited crew outside the pressurized environment of a flight vehicle or habitat (during spaceflight or on a destination surface). Includes contingency operations performed inside unpressurized vehicles or habitats.

Fatigue: Weariness, exhaustion, or decreased attention related to labor, exertion, or stress. May also result from lack of sleep, circadian shifts, depression, boredom, or disease. May result in decreased ability to perform mental or physical tasks.

Field of Regard: The solid angle that can be seen by an observer with eye and head movements.

Field of View: The solid angle that can be seen at one time by the stationary eye. It is about 150 degrees horizontally by 125 degrees vertically. When the two eyes operate together, the horizontal extent enlarges to about 190 degrees.

Field of View for Windows: All points through a window that can be viewed directly by at least one eye, given the combination of achievable eye, head, and body movement. The field of view is restricted by obstructions imposed by the facial structure around the eye and/or placed in front of the eye such as the crewmember's helmet if worn, mullions, structure, and/or other equipment. Achievable movement varies for different flight phases and operational tasks and is

Downloaded from http://www.everyspec.com

dependent on any constraints to movement that are extant such as being suited, seated, and/or restrained, and any g-loads present. With respect to line-of-sight phenomena such as contamination deposition and pluming, any point outboard of the window that is above the plane of the outer surface of the outermost pane of the window port is considered within the field of view of the window.

Gaussian Edge Time (GET): A measure of the amount of motion blur on an electronic display, especially a liquid crystal display. This metric is defined in ICDM-DMS 1.0.

Ground Support Personnel: Human team of one or more members supporting a mission from the ground during pre-flight, in-flight, surface, and post-flight operations.

Ground Support Operations: Operations and tasks performed by ground personnel utilizing spaceflight systems, hardware and equipment at times other than during spaceflight such as before launches and after landings.

Habitability: The state of being fit for occupation or dwelling. Meeting occupant needs of health, safety, performance, and satisfaction.

Habitat: A type of spacecraft, not normally mobile, that has the conditions necessary to sustain the life of the crew and to allow the crew to perform their functions in an efficient manner.

Habitable Volume: The volume remaining within a pressurized volume after accounting for all installed hardware and systems.

Hardware: Individual components of equipment, including but not limited to, fasteners, panels, plumbing, switches, switch guards, and wiring.

Hatch: An opening with an operable, sealable cover that separates two adjoining environments and allows physical passage of people and/or material from one environment to the other (such as between two separate pressurized spacecraft when they are mated or from the inside to the outside of a spacecraft or vice versa). A hatch is composed of two components: a hatchway (the opening itself) and a hatch cover (the piece that closes the hatchway and provides structural support to the spacecraft). A pressure hatch is one in which the atmospheric pressure on one side of the hatch can be different from that on the opposite side of the hatch when the hatch cover is closed. Sometimes, the term “hatch” is used in place of hatch cover. In this NASA Technical Standard, however, the word “hatch cover” is used.

Human Factors: The scientific discipline concerned with the understanding of interactions among humans and other elements of a system and the profession that applies theory, principles, data, and other methods to design to optimize human well-being and overall system performance.

Downloaded from http://www.everyspec.com

Impulse Noise: A burst of noise, which exists for 1 second or less, that is at least 10 dB above the background noise.

Information Management: The act of performing functions with electronic data, including data input, organization, internal processing, storage, distribution, saving, and disposal of information about the system. Information management functions are typically performed by crew and ground personnel using displays on display devices.

Interpretable: Capable of being explained or told the meaning of; translated into intelligible or familiar language or terms.

Ionizing Radiation: Radiation that converts impacted items wholly or partly into ions (electrically charged particles). The particulate radiation component includes all subatomic particles such as protons, neutrons, electrons, atomic nuclei stripped of orbital electrons, mesons, etc.

Intravehicular Activity: Operations performed by crew within the pressurized environment of a spacecraft during a mission.

Intermittent Noise: Noise that is generated for operational durations of 8 hours or less in a 24-hour period. Typical intermittent sources of noise are waste control system components (pumps, fans, separators, valves), exercise equipment (treadmill, cycle ergometer), galley fans, personal hygiene station components (pumps, fans, valves), and pressure regulators.

LEA Spacesuit System: Any spacesuit system designed for use during launch, entry, and abort phases of spaceflight, primarily to protect against toxic exposure, ebullism, hypoxia, and decompression sickness in the event of an unplanned cabin depressurization or toxic release into the cabin. It may also be worn during other dynamic phases of flight such as rendezvous and docking during which there is an increased risk of cabin depressurization due to cabin leaks. The duration for which LEA spacesuits are designed to operate will depend on mission scenarios and may range from a few hours to several days per use.

Linear Acceleration: The rate of change of velocity of a mass, the direction of which is kept constant.

Local Vertical: Achieved by a consistent arrangement of vertical cues within a given visual field to provide a definable demarcation at the crew station boundary within the visual field. A consistent local vertical within modules is highly desirable.

Maintenance: All actions necessary for retaining material in (or restoring it to) a serviceable condition. Maintenance includes servicing, repair, modification, modernization, overhaul, inspection, condition determination, corrosion control, and initial provisioning of support items (MIL-HDBK-1908B, Definitions of Human Factors Terms).

Downloaded from http://www.everyspec.com

Mission: A major activity required to accomplish an Agency goal or to effectively pursue a scientific, technological, or engineering opportunity directly related to an Agency goal. Mission needs are independent of any particular system or technological solution.

Monitoring: Includes checking for quality or fidelity; testing to determine if a signal comes within limits; watching and observing for a specific signal or purpose; keeping track of, regulating, or controlling.

Net Habitable Volume (NHV): The functional volume left available on a spacecraft after accounting for the loss of volume caused by deployed equipment, stowage, trash, and any other items that decrease the functional volume.

Noise: Sound in the auditory range (15 Hz to 20,000 Hz) that is hazardous, undesired, and/or inappropriate to the intended use of the space. In this NASA Technical Standard, the word "noise" is used interchangeably with “sound” and is not intended to convey any relative or absolute degree of hazard or other acoustical characteristic.

Nominal: Within expected, acceptable operational limits or in accordance with planned operational concepts; normal, satisfactory (aerospace usage).

Non-Ionizing Radiation: Includes three categories of electromagnetic radiation: RF radiation, lasers, and incoherent electromagnetic radiation.

Off-Nominal: Outside of expected, acceptable operational limits or not in accordance with planned operational concepts; anomalous, unsatisfactory (aerospace usage).

Operation: An activity, mission, or maneuver, including its planning and execution.

Perception: The process of acquiring knowledge about environmental objects and events by extracting and processing the information received through the senses.

Personal Protective Equipment (PPE): Equipment that is worn to minimize exposure to a variety of hazards. Examples of PPE include such items as gloves, foot and eye protection, hearing protection devices (earplugs, muffs), hard hats, respirators, and full body suits.

Potable Water: Water that is suitable, safe, or prepared for drinking.

Pressurized Volume: The total volume within a pressure shell.

Privacy: Having an acceptable level of control over the extent of sharing oneself (physically, behaviorally, or intellectually) with others. Acceptable level is dependent upon an individual’s background and training.

Program: A strategic investment by a Mission Directorate or Mission Support Office that has a defined architecture and/or technical approach, requirements, funding level, and a

Downloaded from http://www.everyspec.com

management structure that initiates and directs one or more projects. A program defines a strategic direction that the Agency has identified as critical.

Psychomotor: Of or relating to muscular action believed to ensue from conscious mental activity.

Reflectance: The fraction or percentage of incident electromagnetic radiation such as light or other type of wave at a specified wavelength that is reflected from a surface. (See also "specular reflectance" and "diffuse reflectance.")

Rotational Acceleration: The rate of change of angular velocity.

Safe: Freedom from those conditions that can cause death, injury, occupational illness, damage to or loss of equipment or property, or damage to the environment.

Sensory: The information-gathering abilities of humans to see, hear, touch, smell, and taste. Includes temperature, pain, kinesthesia, and equilibrium.

Sound Quality: Those features of a sound that contribute to the subjective impression made on a listener, with reference to the suitability of the sound for a particular set of design goals. It is meant particularly to account for aspects of communication systems that are not quantifiable by intelligibility measurements.

Spacecraft: A habitable vehicle or device, including but not limited to, orbiters, capsules, modules, landers, transfer vehicles, rovers, EVA suits, and habitats designed for travel or operation outside Earth's atmosphere.

Spaceflight: A process that begins when the crew has boarded the spacecraft on Earth and the hatch is closed and terminates when the spacecraft has returned to Earth and all of the crew have egressed the spacecraft and are in the care of ground personnel. In the event of a launch abort, spaceflight continues until all crew have been returned to the care of ground personnel.

Spatial Contrast Sensitivity: Defined by the inverse of the smallest contrast of a spatial sinusoidal luminance grating that can be detected, at each spatial frequency, under standard viewing conditions. Peak contrast sensitivity is about 500, and the highest frequency visible is about 60 cycles/deg.

Specular Reflectance: The perfect, mirror-like reflection of an incident wave or ray such as light from a surface, in which the wave or ray from a single incoming direction is reflected into a single outgoing direction as described by Snell's Law ($\theta i = \theta r$). Diffuse reflection, on the other hand, refers to light that is reflected in a broad range of directions. (See "diffuse reflectance.") The most familiar example of the distinction between specular and diffuse reflection in the case of light waves would be glossy and matte paints or photo prints. While both finishes exhibit a combination of specular and diffuse reflectance, glossy paints and photo prints have a greater proportion of specular reflectance, and matte paints and photo prints have a

Downloaded from http://www.everyspec.com

greater proportion of diffuse reflectance. Anti-reflection coatings reduce the amount of light that is reflected from a given surface. Reflectance for an uncoated glass surface is ~4 percent, which yields ~8 percent for the two surfaces of a single "pane." Anti-reflective coatings can reduce the total reflectance to ~2 percent or less.

Standard: The definition of a "standard" is described as follows:

a. The term "standard," or "technical standard," includes all of the following:

(1) Common and repeated use of rules, conditions, guidelines or characteristics for products or related processes and production methods, and related management systems practices; (2) The definition of terms; classification of components; delineation of procedures; specification of dimensions, materials, performance, designs, or operations; measurement of quality and quantity in describing materials, processes, products, systems, services, or practices; test methods and sampling procedures; formats for information and communication exchange; or descriptions of fit and measurements of size or strength; and, (3) terminology, symbols, packaging, marking or labeling requirements as they apply to a product, process, or production method.

b. "Performance standard" is a standard that states requirements in terms of required results, but without stating the methods for achieving required results; may define the functional requirements for the item, operational requirements, and/or interface and interchangeability characteristics; also may be viewed in juxtaposition to a prescriptive standard.

c. "Non-government standard" is a standard as defined above that is in the form of a standardization document developed by a private sector association, organization, or technical society that plans, develops, establishes, or coordinates standards, specifications, handbooks, or related documents.

Standardize: To make uniform.

Stereoscopic Depth Perception: The ability to distinguish objects at different depths as a result of their different positions (disparities) in the two eyes.

Suited: Wearing clothing that is designed to protect the crewmember from differences in environment such as pressure, atmosphere, acceleration, or temperature. "Suited" can refer to both pressurized and unpressurized pressure suits.

Sustained Accelerations: Events, linear or rotational, with a duration of greater than 0.5 seconds.

System: The combination of elements that function together to produce the capability to meet a need. The elements include all hardware, software, equipment, facilities, personnel,

Downloaded from http://www.everyspec.com

processes, and procedures needed for this purpose. (Source: NPR 7120.7, NASA Information Technology and Institutional Infrastructure Program and Project Management Requirements.)

Tailoring: The process by which requirements are derived for a specific system. This process involves two steps:

a. Selecting applicable requirements - Not all requirements within a Standard may apply to all systems. Systems are defined by parameters such as the number of crewmembers, mission duration and operations, gravity environment, and EVA activities. Some requirements apply to only some parameters. For example, mission duration may influence the volume dedicated for certain crew functions such as crew sleep and hygiene. Or the operational gravity environment may influence which requirements are applicable such as a lunar surface rover would not have met the microgravity requirements.

b. Creating requirements that can be verified - Some requirements use general terms such as "effective." When tailoring for a specific system, these terms are then defined with values that are objective and measurable. The tailored requirement has to comply with the intent of the general requirement. For example, analysis of a specific system may show that a critical task has to be performed in less than 20 seconds. In the tailoring process, the word "effective" would be replaced by words that limit critical task performance times to 20 seconds.

Task: A specific type, piece, or amount of work; a subset of an activity or job that is called out in a procedure.

Transient Accelerations: Events, linear or rotational, with a duration of less than or equal to 0.5 seconds.

Transmittance: The fraction or percentage of incident electromagnetic radiation such as light at a specified wavelength that passes through a medium.

Unsuited: Wearing the type of clothing that is ordinarily worn in the interior of a spacecraft, especially a habitat, and as might be worn on Earth.

Vehicle/Habitat: A mobile or static spacecraft with a pressurized atmosphere appropriate for sustained, unsuited survival and crew operations. The vehicle is a container, generally composed of multiple elements, used to transport persons or things to/from a location outside of Earth's atmosphere. (See "habitat" as defined above.) Includes all hardware and equipment within or attached to the pressurized environment.

Visual Accommodation: Defined by the change in optical power of the eye to bring objects at different distances into focus. In young observers, average accommodative power is about 15 diopters but declines to 0 by the age of 60.

Downloaded from http://www.everyspec.com

Visual Acuity: Defined by the smallest letters that can be identified under standard viewing conditions. An average acuity for young adults is about -0.1 logMAR but declines with age.

Voluntary Consensus Standards: A type of standard developed or adopted by voluntary consensus standards bodies, through the use of a voluntary consensus standards development process defined in the definition of voluntary consensus standards bodies in this section. These bodies often have intellectual property rights (IPR) policies that include provisions requiring that owners of relevant patented technology incorporated into a standard make that intellectual property available to implementers of the standard on a non-discriminatory and royalty-free or reasonable royalty terms (and to bind subsequent owners of standards essential patents to the same terms). A standard that includes patented technology needs to be governed by such policies, which should be easily accessible, set out clear rules governing the disclosure and licensing of the relevant intellectual property, and take into account the interests of all stakeholders, including the IPR holders and those seeking to implement the standard. (Source: OMB Circular No. A-119.)

Voluntary Consensus Standards Body: A type of association, organization, or technical society that plans, develops, establishes, or coordinates voluntary consensus standards using a voluntary consensus standards development process that includes the following attributes or elements:

a. Openness: The procedures or processes used are open to interested parties. Such parties are provided meaningful opportunities to participate in standards development on a non-discriminatory basis. The procedures or processes for participating in standards development and for developing the standard are transparent.

b. Balance: The standards development process should be balanced. Specifically, there should be meaningful involvement from a broad range of parties, with no single interest dominating the decision-making.

c. Due process: Due process shall include documented and publicly available policies and procedures, adequate notice of meetings and standards development, sufficient time to review drafts and prepare views and objections, access to views and objections of other participants, and a fair and impartial process for resolving conflicting views.

d. Appeals process: An appeals process shall be available for the impartial handling of procedural appeals.

e. Consensus: Consensus is defined as general agreement, but not necessarily unanimity. During the development of consensus, comments and objections are considered using fair, impartial, open, and transparent processes. (Source: OMB Circular No. A-119).

Warning: Notification of an event that requires immediate action.

Downloaded from http://www.everyspec.com

Wavefront: The surface joining all adjacent points on a wave that have the same phase, particularly light that travels as an electromagnetic wave.

Wavefront Error: The total optical path difference induced into a wavefront with respect to the wavelength of light, usually referenced to a helium-neon (HeNe) laser wavelength of 632.8 nm. For planar waves, wavefront error occurs when the wavefront is distorted such that an individual wavefront is no longer in phase. This occurs when different parts of the wavefront travel different optical path lengths. In an ideal window, a planar wave will pass through it such that the optical path length at each point on the window is the same, and the wavefront retains the same phase. Wavefront error is aperture dependent. In an imperfect window, the wavefront is distorted, i.e., the phase is not maintained. Wavefront error can be distorted by surface imperfections (the window is not "flat") or by material inhomogeneities (the index of refraction varies across the window).

Window: A non-electronic means for direct through-the-hull viewing using a transparent material; the same as and used interchangeably with window port and window assembly.

Window Assembly: The same as and used interchangeably with window and window port.

Window Cover: An internal non-pressure-containing, transparent sheet or pane, usually of a different material than the window panes such as acrylic or other material intended to protect the underlying window pressure and/or protective pane(s) from incidental crew contact. A window cover is normally not an integral part of the window assembly and has the characteristics as specified in section 8.6, Windows, of the HIDH. Non-integral protective panes can be considered temporary, i.e., replaceable after some period of time, after which their optical quality has degraded below the category level for which they were designed. External window protection devices are referred to as shutters.

Window Filter: An internal, non-pressure-containing, transparent sheet or pane, usually of a different material than the window panes such as polycarbonate or other material intended to filter non-ionizing radiation hazards to safe levels. A window filter is not considered an integral part of the window assembly. Window filters are easily removed and reinstalled without the use of tools by one crewmember. A window filter may also serve as a window cover.

Window Port: The finished assembly including the frame structure (includes all gaskets, bolts, spacers, and other such parts) and all window panes that would normally be used at a specific location with any protective panes, permanent coatings, plastic films, or laminates applied or in place; the same as and used interchangeably with window and window assembly.

Window Shade: Usually, an internal, non-pressure-containing, opaque sheet intended to block external light from entering the interior of a crew cabin. A window shade may or may not be an integral part of the window assembly. Non-integral window shades are easily removed and reinstalled without the use of tools by one crewmember. Window shades that are an integral part of the window assembly can also act as window shutters.

Downloaded from http://www.everyspec.com

Window Shutter: An internally and remotely operable external cover intended to prevent natural and induced environmental degradation, e.g., contamination, erosion, and impacts, of the outboard-most window pane with open and close indicators that are readable from the remote operating location. Window shutters can be operated through their full range of motion in less than 10 seconds and can serve as window shades.

Workload: The amount of work expected in a unit of time. Physical workload refers to the number of individual physical activities that are conducted simultaneously or in close succession. Similarly, mental or cognitive workload refers to the number of mental operations or activities that are conducted simultaneously or in close succession.

APPENDIX D

REQUIREMENTS COMPLIANCE MATRIX

Downloaded from http://www.everyspec.com

APPENDIX D

REQUIREMENTS COMPLIANCE MATRIX

D.1 Purpose

Due to the complexity and uniqueness of space flight, it is unlikely that all of the requirements in a NASA technical standard will apply. The Requirements Compliance Matrix below contains this NASA Technical Standard's technical authority requirements and may be used by programs and projects to indicate requirements that are applicable or not applicable to help minimize costs. Enter "Yes" in the "Applicable" column if the requirement is applicable to the program or project or "No" if the requirement is not applicable to the program or project. The "Comments" column may be used to provide specific instructions on how to apply the requirement or to specify proposed tailoring.

NASA-STD-3001, Volume 2, Revision B				
Section	**Description**	**Requirement in this Standard**	**Applicable (Enter Yes or No)**	**Comments**
3.5.1	Human-Centered Task Analysis	[V2 3006] Each human spaceflight program or project **shall** perform a task analysis to support hardware and operations design.		
4.1.1	Data Sets	[V2 4001] Each program shall identify or develop an anthropometry, biomechanics, aerobic capacity, and strength data set for the crewmember population to be accommodated in support of all requirements in section 4 of this NASA Technical Standard.		
4.1.2	Data Set Characteristics	[V2 4002] Characteristics unique to anticipated gravity environments, clothing, protective equipment (including spacesuits), suit pressurization, external interfacing equipment, crew conditions to be accommodated, and mission duration shall be documented in a data set and be available for application to system, hardware, and equipment design.		
4.1.3	Population Definition	[V2 4003] The program shall define the range of the population dimensions that system designs are intended to accommodate.		
4.1.4	Data Set Assumptions	[V2 4004] Physical data sets shall include age, gender, physical condition, and other appropriate and distinguishing population characteristics.		
4.2.1	Body Length Data	[V2 4005] Body length data developed in accordance with section 4.1, Physical Data Sets, in this NASA Technical Standard shall be applied to the design of all elements of system, hardware, and equipment with which the crew interfaces to ensure that crew tasks can be efficiently and effectively performed.		

Downloaded from http://www.everyspec.com

NASA-STD-3001, Volume 2, Revision B				
Section	**Description**	**Requirement in this Standard**	**Applicable (Enter Yes or No)**	**Comments**
4.2.2	Changes in Body Length	[V2 4006] In reduced gravity, expected changes in body lengths, circumferences, and posture shall be accommodated in the design.		
4.3	Range of Motion Data	[V2 4007] Range of motion data developed in accordance with section 4.1, Physical Data Sets, in this NASA Technical Standard shall be applied to the design of all elements of system, hardware, and equipment with which the crew interfaces to ensure that crew tasks can be efficiently and effectively performed.		
4.4	Reach Data	[V2 4008] Reach data developed in accordance with section 4.1, Physical Data Sets, in this NASA Technical Standard shall be applied to the design so that all crew interface items are located within the reach limits of the worst-case (i.e., most limited) crewmember in his/her working posture, using the most encumbering equipment and clothing anticipated.		
4.5	Body Surface Area Data	[V2 4009] Where appropriate, body surface area data developed in accordance with section 4.1, Physical Data Sets, in this NASA Technical Standard shall be applied to the design of all elements of system, hardware, and equipment with which the crew interfaces to ensure that crew tasks can be efficiently and effectively performed.		
4.6	Body Volume Data	[V2 4010] Where appropriate, body volume data developed in accordance with section 4.1, Physical Data Sets, in this NASA Technical Standard shall be applied to the design of all elements of system, hardware, and equipment with which the crew interfaces to ensure that crew tasks can be efficiently and effectively performed.		
4.7	Body Mass Data	[V2 4011] Body mass data developed in accordance with section 4.1, Physical Data Sets, in this NASA Technical Standard shall be applied to the design of all elements of system, hardware, and equipment with which the crew interfaces to ensure that crew tasks can be efficiently and effectively performed.		
4.8.1	Strength Data	[V2 4012] Strength data developed in accordance with section 4.1, Physical Data Sets, in this NASA Technical Standard shall be applied to the design of all elements of the system, hardware, and equipment with which the crew interfaces to ensure that crew tasks can be efficiently and effectively performed without injury to the crew and that hardware can be used by all crewmembers within the upper and lower ranges of anticipated strength without sustaining damage.		
4.8.2	Muscle Effects	[V2 4013] The effects of muscle endurance and fatigue shall be factored into system design.		
4.9	Aerobic Capacity	[V2 4015] The system shall be operable by crewmembers with the aerobic capacity as defined in NASA-STD-3001, Volume 1.		
5.1.1	Visual Capabilities	[V2 5001] Visual capabilities shall be accommodated in the design of all visual interface elements for anticipated levels of crew capability and anticipated levels of task demands.		
5.1.2	Auditory Perceptual Capabilities	[V2 5002] Auditory perceptual capabilities shall be accommodated in the design of all auditory system elements that interface with the crew for anticipated levels of crew capability and anticipated levels of task demands.		

Downloaded from http://www.everyspec.com

NASA-STD-3001, Volume 2, Revision B				
Section	**Description**	**Requirement in this Standard**	**Applicable (Enter Yes or No)**	**Comments**
5.1.3	Sensorimotor Capabilities	[V2 5003] Sensorimotor capabilities shall be accommodated in the design of all display-control system elements that interface with the crew for anticipated levels of crew capability and anticipated levels of task demands.		
5.1.4	Cognitive Capabilities	[V2 5004] Cognitive performance capabilities shall be accommodated in the design of all system elements that interface with the crew for all anticipated levels of crew capability and all anticipated levels of task demands.		
5.2.1	Time and Performance	[V2 5005] The ability to perform tasks in a timely and accurate manner shall be accommodated in the design of all system elements that interface with the crew for anticipated levels of crew capability and anticipated levels of task demands.		
5.2.2	Situational Awareness (SA)	[V2 5006] Systems shall provide the SA necessary for efficient and effective task performance and provide the means to recover SA, if lost, for anticipated levels of crew capability and anticipated levels of task demands.		
5.2.3	Nominal Cognitive Workload	[V2 5007] The system shall provide crew interfaces that, when used to perform nominal crew tasks, result in Bedford Workload Scale ratings of 3 or less (or equivalent rating on another validated workload scale).		
5.2.4	Off-Nominal Cognitive Workload	[V2 5008] The system shall provide crew interfaces that when used to perform off-nominal crew tasks result in a Bedford Workload Scale rating of 6 or less (or equivalent rating on another validated workload scale).		
6.1	Trend Analysis of Environmental Data	[V2 6001] The system shall provide environmental monitoring data in formats compatible with performing temporal trend analyses.		
6.2.1.1	Inert Diluent Gas	[V2 6002] For mission durations in excess of 2 weeks, the atmosphere shall contain a physiologically inert diluent gas to prevent lung collapse.		
6.2.1.2	O_2 Partial Pressure Range for Crew Exposure	[V2 6003] The system shall maintain inspired oxygen partial pressure (P_IO_2) in accordance with Table 1, Inspired Oxygen Partial Pressure Exposure Ranges.		

Table 1—Inspired Oxygen Partial Pressure Exposure Ranges

Inspired O_2 partial pressure P_IO_2 = (PB-47)*FIO2	Normoxia Target Range	Indefinite Hyperoxia Upper Limit	Short-Term Hyperoxia Upper Limit	Mild Hypoxia Lower Limit
P_IO_2 (mmHg) P_IO_2 = (PB-47)*FIO2	145-155	356	791	127

Downloaded from http://www.everyspec.com

NASA-STD-3001, Volume 2, Revision B								
Section	**Description**	**Requirement in this Standard**					**Applicable (Enter Yes or No)**	**Comments**
		P_IO_2 (psia)	2.8-3.0	6.9	15.3	2.5		
		Acceptable Duration	Indefinite	Indefinite	6-9 Hours *	1 week**		
		Examples	Habitat and Spacesuit Minimum	EVA and Cabin Depress In-Suit Survival	O_2 Prebreathe for EVA Preparation	EVA Preparation (ISS Campout, Shuttle 10.2, Exploration Atmosphere of 8.2 psia and 34% O_2)		
		PB- Ambient Barometric Pressure F_I - Fractional concentration of inspired oxygen FIO2 – The dry-gas decimal fraction of ambient O_2 * From Johnson Procedural Requirements (JPR) 1880.4, Requirements and Limitations for Exposure to Reduced Atmospheric Pressure. Page 6 under subsection "g" shows the limits for prebreathe in a spacesuit. The limit is 9 hours when that is the only exposure to enriched O_2 in a 48-hour period. The limit is 6 hours when it is the only exposure to enriched O_2 in a 24-hour period and also states that consecutive daily exposures shall not exceed 5 consecutive days. ** At the time of this publication, 1 week was the accepted limit for this hypoxic exposure. Research and/or in-flight surveillance is proposed to evaluate the possibility of extending this duration.						
6.2.1.3	Nominal Vehicle/Habitat Carbon Dioxide Levels	[V2 6004] [V2 6004] The system shall limit the average 1-hour CO_2 partial pressure ($ppCO_2$) in the habitat volume to no more than 3 mmHg (760 mmHg cabin pressure).						
6.2.2.1	Total Pressure Tolerance Range for Indefinite Crew Exposure	[V2 6006] The system shall maintain the pressure to which the crew is exposed to between 26.2 kPa < pressure ≤ 103 kPa (3.8 psia < pressure ≤ 15.0 psia) for indefinite human exposure without measurable impairments to health or performance.						
6.2.2.2	Rate of Pressure Change	[V2 6007] The rate of change of total internal vehicle pressure shall not exceed 13.5 psi/min.						
6.2.2.3	Decompression Sickness (DCS) Risk Identification	[V2 6008] Each program shall define mission-unique DCS mitigation strategies to achieve the level of acceptable risk of DCS as defined in NASA-STD-3001, Volume 1, section 4.4.3.6.1 Decompression Sickness Prevention.						
6.2.2.4	Decompression Sickness Treatment Capability	[V2 6009] The system shall provide a DCS treatment capability.						

Downloaded from http://www.everyspec.com

NASA-STD-3001, Volume 2, Revision B				
Section	**Description**	**Requirement in this Standard**	**Applicable (Enter Yes or No)**	**Comments**
6.2.3.1	Relative Humidity	[V2 6010] Average relative humidity (RH) shall be maintained between 25% and 75% over each 24-hour period during all mission operations, excluding suited operations of less than 8 hours and post-landing through hatch opening.		
6.2.3.2	Post-Landing Relative Humidity	[V2 6011] For nominal post-landing operations, the system shall limit RH to the levels in Table 2, Average Relative Humidity Exposure Limits for Post-Landing Operations. **Table 2—Average Relative Humidity Exposure Limits for Post-Landing Operations** **Average RH** / **Time Allowed** 25% < RH ≤ 75% (nominal range[1]) / Indefinite[2] 75% < RH ≤ 85% / 24 hr[3] 85% < RH ≤ 95% / 12 hr[3] 95% < RH / 8 hr[3] 1. Nominal humidity range is included for completeness. 2. Assumes temperature is within nominal range in accordance with section 6.2.4.2, Temperature Range [V2 6013], in this NASA Technical Standard. 3. Only after doffing a suit post-landing; duration may be shorter if temperature is outside nominal range (specified in section 6.2.4.2, Temperature Range [V2 6013], in this NASA Technical Standard).		
6.2.4.1	Comfort Zone	[V2 6012] The system shall be able to maintain thermal conditions in the comfort zone as shown in Figure 2, Environmental Comfort Zone, throughout all mission phases, including planned contingencies.		
6.2.4.2	Temperature Comfort Range	[V2 6013] The system shall maintain the atmospheric temperature within the range of 18 ºC (64.4 ºF) to 27 ºC (80.6 ºF) during all nominal operations, excluding suited operations, ascent, entry, landing, and post-landing.		
6.2.4.3	Crewmember Heat Storage	[V2 6014] The system shall prevent the energy stored by each crewmember from exceeding the cognitive deficit onset (CDO) limits defined by the range 4.7 kJ/kg (2.0 Btu/lb) > ΔQ stored > -4.1 kJ/kg (-1.8 Btu/lb) during pre-launch operations, ascent, entry, descent, landing, post-landing, contingency, and suited operations longer than 12 hours, where ΔQ stored is calculated using a validated and NASA-approved thermoregulatory model, such as 41-Node Man (JSC-33124, 41-Node Transient Metabolic Man Computer Program Documentation – A thermal regulatory model of the human body with environmental suit applications,) or the Wissler model.		
6.2.5.1	Atmospheric Control	[V2 6017] The system shall allow the crew to control atmospheric pressure, humidity, temperature, ventilation, and ppO_2.		
6.2.5.2	Remote Adjustment	[V2 6019] The system shall provide for the remote adjustment of atmospheric pressure, temperature, and ppO_2.		

Downloaded from http://www.everyspec.com

NASA-STD-3001, Volume 2, Revision B				
Section	**Description**	**Requirement in this Standard**	**Applicable (Enter Yes or No)**	**Comments**
6.2.6.1	Atmospheric Data Recording	[V2 6020] For each isolatable, habitable compartment, the system shall automatically record pressure, humidity, temperature, ppO_2, and $ppCO_2$ data.		
6.2.6.2	Atmospheric Data Displaying	[V2 6021] The system shall display real-time values for pressure, humidity, temperature, ppO_2, and $ppCO_2$ data to the crew.		
6.2.7.1	Atmospheric Monitoring and Alerting	[V2 6022] The system shall monitor atmospheric parameters, including atmospheric pressure, humidity, temperature, ppO_2, and $ppCO_2$ and alert the crew when they are outside safe limits.		
6.2.7.2	Trace Constituent Monitoring and Alerting	[V2 6023] The system shall monitor trace volatile organic contaminants (VOCs) in the cabin atmosphere and alert the crew when they are approaching defined limits.		
6.2.7.3	Combustion Monitoring and Alerting	[V2 6024] The system shall continuously monitor toxic atmospheric components that would result from pre-combustion and combustion events before, during, and after the event and alert the crew in sufficient time for them to take appropriate action.		
6.2.7.4	Contamination Monitoring and Alerting	[V2 6025] The system shall monitor and display atmospheric compound levels that result from contamination events, e.g., toxic release, systems leaks, or externally originated, before, during, and after an event and alert the crew in sufficient time for them to take appropriate action.		
6.3.1.1	Water Physiochemical Limits	[V2 6026] At the point of crew consumption or contact, the system shall provide potable water that is safe for human use, including drinking, food rehydration, personal hygiene, and medical needs and is aesthetically acceptable.		
6.3.1.2	Water Microbial Limits	[V2 6027] At the point of crew consumption or contact, the system shall provide potable water quality at or below the microbial limits of Table 3, Potable Water Microbiological Limits, to the crew for drinking, food rehydration, personal hygiene, and medical needs.		

Downloaded from http://www.everyspec.com

NASA-STD-3001, Volume 2, Revision B				
Section	**Description**	**Requirement in this Standard**	**Applicable (Enter Yes or No)**	**Comments**
		Table 3—Potable Water Microbiological Limits **Characteristic** / **Maximum Allowable** / **Units** Bacterial Count / 50 / CFU/ml Coliform Bacteria / Non-detectable per 100 ml / - Fungal Count / Non-detectable per 100 ml / - Parasitic Protozoa, e.g., Giardia and Cryptosporidium / 0 / - Note: CFU = colony forming unit.		
6.3.1.3	Total Iodine Concentration at the Point of Consumption	[V2 6105] The total iodine concentration in drinking water shall be ≤0.20 mg/L at the point of consumption.		
6.3.2.1	Drinking Water Quality	[V2 6029] The system shall provide a minimum of 2.0 kg (4.4 lb) of potable water per crewmember per mission day for drinking.		
6.3.2.2	Food Rehydration Water Quality	[V2 6030] The system shall provide sufficient quantities of potable water per crewmember per mission day to support food rehydration beyond the water quantity specified in section 6.3.2.1, Drinking Water Quantity [V2 6029], in this NASA Technical Standard.		
6.3.2.3	Hot Rehydration Water Quantity	[V2 6031] The system shall provide sufficient quantities of hot potable water to support hot food and beverage hydration for mission durations greater than 3 days.		
6.3.2.4	Personal Hygiene Water Quantity	[V2 6032] The system shall provide a sufficient quantity of potable water per crewmember per day for personal hygiene.		
6.3.2.5	Eye Irrigation Water Quantity	[V2 6033] The system shall provide a minimum of 0.5 kg of immediately available potable water for eye irrigation for particulate events, e.g., dust, foreign objects, and other eye irritations.		
6.3.2.6	Medical Contingency Water Quantity	[V2 6034] The system shall provide a minimum of 5 kg of immediately available water for each medical contingency event, e.g., chemical exposure/burn, as determined by the human spaceflight program.		
6.3.2.7	Water Quantity for Suited EVA Operations	[V2 6035] The system shall provide an additional 240 ml (8 oz) of potable water per hour, above nominal potable water provision, for crewmembers performing EVA operations.		
6.3.2.8	Fluid Loading Water Quantity for Earth Entry	[V2 6036] The system shall provide a minimum of 1.0 kg (2.2 lb) of potable water per crewmember for re-entry fluid loading countermeasure for each end-of-mission (EOM) opportunity.		
6.3.2.9	Crew Recovery Water Quantity	[V2 6037] The system shall provide a minimum of 1.0 kg (2.2 lb) of potable water per crewmember for each 8-hour period of the entire post-landing crew recovery period.		
6.3.2.10	Sampling Water Quantity	[V2 6038] The system shall provide sufficient quantities of potable water to support water quality sampling.		

Downloaded from http://www.everyspec.com

NASA-STD-3001, Volume 2, Revision B				
Section	**Description**	**Requirement in this Standard**	**Applicable (Enter Yes or No)**	**Comments**
6.3.3.1	Water Dispensing Rate	[V2 6039] Water shall be dispensed at a rate that is compatible with the food system.		
6.3.3.2	Water Dispensing Increments	[V2 6040] To prevent overflow, water shall be dispensable in specified increments that are compatible with the food preparation instructions and time demands of the allotted meal schedule.		
6.3.4.1	Hot Beverage Water Temperature	[V2 6041] The system shall provide potable water for hot beverages with a dispensing temperature between 68.3 ºC (155 ºF) and 79.4 ºC (175 ºF).		
6.3.4.2	Cold Beverage Water Temperature	[V2 6042] The system shall provide potable cold beverages at a maximum temperature of 15.6 ºC (60 ºF).		
6.3.4.3	Food Hydration Water Temperature	[V2 6043] The system shall provide potable water for food hydration with a dispensing temperature between 68.3 ºC (155 ºF) and 79.4 ºC (175 ºF).		
6.3.4.4	Personal Hygiene Water Temperature	[V2 6044] The system shall provide potable water for personal hygiene with a dispensing temperature between 29.4 ºC (85 ºF) and 46.1 ºC (115 ºF).		
6.3.4.5	Medical Water Temperature	[V2 6045] The system shall provide potable water for medical events with a dispensing temperature between 18 ºC (64.4 ºF) and 28 ºC (82.4 ºF).		
6.3.5	Water Quality Monitoring	[V2 6046] Water quality monitoring capability shall include pre-flight, in-flight, and post-flight sampling and analysis.		
6.4.1.1	Toxic Hazard Level Three	[V2 6047] The system shall use only chemicals that are Toxic Hazard Level Three or below, as defined in JSC-26895, Guidelines for Assessing the Toxic Hazard of Spacecraft Chemicals and Test Materials, in the habitable volume of the spacecraft.		
6.4.1.2	Toxic Hazard Level Four	[V2 6048] The system shall prevent Toxic Hazard Level Four chemicals, as defined in JSC-26895, from entering the habitable volume of the spacecraft.		
6.4.1.3	Chemical Decomposition	[V2 6049] The system shall use only chemicals that, if released into the habitable volume, do not decompose into hazardous compounds that would threaten health during any phase of operations.		
6.4.2	Atmosphere Contamination Limit – Airborne Contaminants	[V2 6050] The system **shall** limit airborne contaminants to concentrations specified in JSC-20584, Spacecraft Maximum Allowable Concentrations for Airborne Contaminants.		
6.4.3	Water Contamination Control	[V2 6051] The system **shall** prevent potable and hygiene water supply contamination from microbial, atmospheric (including dust), chemical, and non-potable water sources to ensure that potable and hygiene water are provided.		
6.4.4.1	Particulate Matter	[V2 6052] The system shall limit the cabin particulate matter concentration for total dust to <3 mg/m^3, and the respirable fraction of the total dust to <2.5 µm in aerodynamic diameter to <1 mg/m^3.		
6.4.4.2	Lunar Dust Contamination	[V2 6053] The system shall limit the levels of lunar dust particles less than 10 µm in size in the habitable atmosphere below a time-weighted average of 0.3 mg/m^3 during intermittent daily exposure periods that may persist up to 6 months in duration.		

Downloaded from http://www.everyspec.com

NASA-STD-3001, Volume 2, Revision B				
Section	**Description**	**Requirement in this Standard**	**Applicable (Enter Yes or No)**	**Comments**
6.4.5.1	Fungal Contamination	[V2 6054] The system shall limit the levels of fungal contaminants in the internal atmosphere below 100 CFU/m^3 during nominal systems operations.		
6.4.5.2	Bacterial Contamination	[V2 6055] The system shall limit the levels of bacterial contaminants in the internal atmosphere below 1000 CFU/m^3 during nominal systems operations.		
6.4.5.3	Surface Cleanability	[V2 6056] System interior surfaces shall be compatible for cleaning of microbial contamination to a level of 10,000 CFU per 100 cm^2 or fewer bacteria and to a level of 100 CFU per 100 cm^2 or fewer fungi.		
6.4.5.4	Surface Microbial Contamination during Nominal Systems Operations	[V2 6057] The system shall limit the levels of microbial contaminants on the internal surfaces to 10,000 CFU per 100 cm^2 or fewer bacteria and to 100 CFU per 100 cm^2 or fewer fungi with no medically significant microorganism present during nominal system operations.		
6.4.5.5	Condensation Limitation	[V2 6058] The system shall prevent condensation persistence on surfaces within the internal volume.		
6.4.5.6	Microbial Air Contamination Prevention	[V2 6059] The system shall limit the levels of microbial contaminants by maintaining a continuous flow of air that has been cleaned to have at least 99.97% of airborne particles 0.3 µm in diameter, or larger, removed.		
6.4.5.7	Biological Payloads	[V2 6060] Biological payloads shall meet the criteria defined by the JSC Biosafety Review Board guidelines contained in JPR-1800.5, Biosafety Review Board Operations and Requirements Document.		
6.4.6	Cross-Contamination	[V2 6061] The system shall control cross-contamination among crew, payloads, e.g., animals and plants, surface vehicles, and planetary environments to acceptable levels in accordance with JPR-1800.5.		
6.4.7	Availability of Environmental Hazards Information	[V2 6062] The system shall provide toxicological and environmental hazard information in formats accessible by the crew throughout the mission.		
6.4.8	Contamination Cleanup	[V2 6063] The system shall provide a means to remove or isolate released contaminants and to return the environment to a safe condition.		
6.5.1	Sustained Translational Acceleration Limits	[V2 6064] The system shall limit the magnitude, direction, and duration of crew exposure to sustained (>0.5 seconds) translational acceleration by staying below the limits in Figure 3, $+G_x$ Sustained Translational Acceleration Limits; Figure 4, $-G_x$ Sustained Translational Acceleration Limits; Figure 5, Ascent and Ascent Aborts $+G_z$ Sustained Translational Acceleration Limits; Figure 6, Return to Earth $\pm G_z$ Sustained Translational Acceleration Limits; and Figure 7, $\pm G_y$ Sustained Translational Acceleration Limits.		

Downloaded from http://www.everyspec.com

NASA-STD-3001, Volume 2, Revision B				
Section	**Description**	**Requirement in this Standard**	**Applicable (Enter Yes or No)**	**Comments**
6.5.2.1	Rotational Velocity	[V2 6065] The system shall limit crew exposure to rotational velocities in yaw, pitch, and roll by staying below the limits specified in Figure 8, Rotational Velocity Limits. 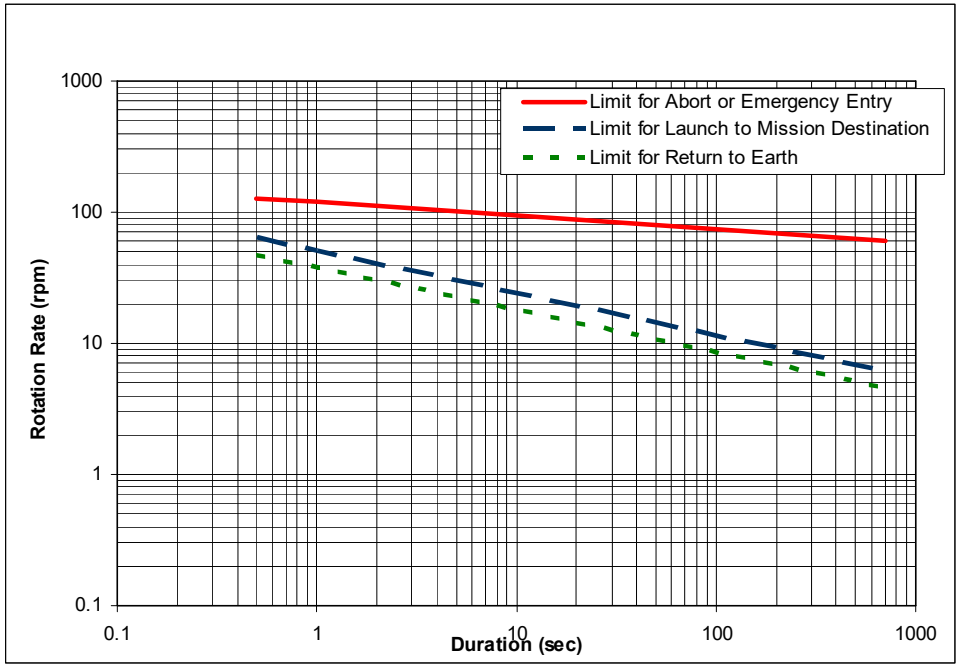		

Downloaded from http://www.everyspec.com

<table>
<tr><th colspan="6">NASA-STD-3001, Volume 2, Revision B</th></tr>
<tr><th>Section</th><th>Description</th><th>Requirement in this Standard</th><th>Applicable (Enter Yes or No)</th><th colspan="2">Comments</th></tr>
<tr><td></td><td></td><td>
<table>
<tr><th colspan="5">Data for Curves</th></tr>
<tr><td rowspan="2">Return</td><td>Duration (sec)</td><td>0.5</td><td>1</td><td>700</td></tr>
<tr><td>Rotation Rate (rpm)</td><td>47</td><td>37.5</td><td>4.5</td></tr>
<tr><td rowspan="2">Launch</td><td>Duration (sec)</td><td>0.5</td><td>1</td><td>700</td></tr>
<tr><td>Rotation Rate (rpm)</td><td>63</td><td>50</td><td>6</td></tr>
<tr><td rowspan="2">Emergency</td><td>Duration (sec)</td><td>0.5</td><td>1</td><td>700</td></tr>
<tr><td>Rotation Rate (rpm)</td><td>129</td><td>120</td><td>60</td></tr>
</table>
Figure 8—Rotational Velocity Limits</td><td></td><td colspan="2"></td></tr>
<tr><td>6.5.2.2</td><td>Sustained Rotational Acceleration Due to Cross-Coupled Rotation</td><td>[V2 6066] The system shall prevent the crew exposure to sustained (>0.5 seconds) rotational accelerations caused by cross-coupled rotations greater than 2 rad/s^2.</td><td></td><td colspan="2"></td></tr>
<tr><td>6.5.2.3</td><td>Transient Rotational Acceleration</td><td>[V2 6067] The system shall limit transient (≤0.5 seconds) rotational accelerations in yaw, pitch, or roll to which the crew is exposed and the limit used appropriately scaled for each crewmember size from the 50th percentile male limits of 2,200 rad/s^2 for nominal and 3,800 rad/s^2 for off-nominal cases.</td><td></td><td colspan="2"></td></tr>
<tr><td>6.5.3.1</td><td>Acceleration Rate of Change</td><td>[V2 6068] The system shall limit crew exposure to acceleration rates of change no larger than 500 g/s during any sustained (>0.5 seconds) acceleration event.</td><td></td><td colspan="2"></td></tr>
<tr><td>6.5.3.2</td><td>Acceleration Injury Prevention</td><td>[V2 6069] The system shall mitigate the risk of injury to crewmembers caused by accelerations during dynamic mission phases per Table 4, Acceptable Injury Risk Due to Dynamic Loads.
Table 4—Acceptable Injury Risk Due to Dynamic Loads
<table>
<tr><td>Injury Severity (Class)*</td><td>≥95% of dynamic cases</td><td><5% of dynamic cases</td></tr>
<tr><td>Minor (I)</td><td><4%</td><td><23%</td></tr>
<tr><td>Moderate (II)</td><td><1%</td><td><4%</td></tr>
<tr><td>Severe (III)</td><td><0.1%</td><td><0.7%
[<1%]^T</td></tr>
<tr><td>Life-Threatening/Fatal (IV)</td><td><0.1%</td><td><0.7%</td></tr>
</table>
*Injury classes are defined in NASA/TP-2015-218578.
^{T}Acceptance of higher occurrence in brackets assumes Search and Rescue forces are able to access crewmembers within 30 minutes of mishap occurrence.</td><td></td><td colspan="2"></td></tr>
</table>

Downloaded from http://www.everyspec.com

NASA-STD-3001, Volume 2, Revision B				
Section	**Description**	**Requirement in this Standard**	**Applicable (Enter Yes or No)**	**Comments**
6.5.3.3	Injury Risk Criterion	[V2 6070] The system shall limit the injury risk criterion (β) to no greater than 1.0 per the Brinkley Dynamic Response model (NASA/TM-2013-217380, Revision 1, Application of the Brinkley Dynamic Response Criterion to Spacecraft Transient Dynamic Events).		
6.6.1.1	Launch, Entry, and Abort Noise Exposure Limits	[V2 6073] During launch, entry, and abort operations, the noise exposure level (not including impulse noise) at the crewmember's ear, calculated over any 24-hour period, **shall** be limited such that the noise dose (D) is ≤100: $$D = 100\sum_{n=1}^{N}\frac{C_n}{T_n}, \quad \text{(Eq.1)}$$ where: N = the number of noise exposure events during the 24-hour period C_n = the actual duration of the exposure event in minutes T_n = the maximum noise exposure duration allowed, based on the specific sound level (L_n) of an exposure event in dBA, calculated using the following equation: $$T_n = \frac{480}{2^{(L_n-85)/3}} \quad \text{(Eq. 2)}$$		
6.6.1.2	Ceiling Limit for Launch and Entry	[V2 6074] During launch and entry operations, the system **shall** limit the combined A-weighted sound levels (not including impulse noise) at the crewmembers' ears to a maximum of 105 dBA; the noise attenuation effectiveness of hearing protection or communications headsets may be used to satisfy this requirement.		
6.6.1.3	Ceiling Limit for Launch Abort	[V2 6075] During launch abort operations, the system shall limit the combined A-weighted sound levels (not including impulse noise) at the crewmembers' ears to a maximum of 115 dBA; the noise attenuation effectiveness of hearing protection or communications headsets may be used to satisfy this requirement.		
6.6.1.4	Launch, Entry, and Abort Impulse Noise Limits	[V2 6076] During launch, entry, and abort operations, impulse noise measured at the crewmember's ear location shall be limited to less than 140-dB peak SPL; the noise attenuation effectiveness of hearing protection or communications headsets may be used to satisfy this requirement.		
6.6.1.5	Hazardous Noise Limits for All Phases Except Launch, Entry, and Abort	[V2 6077] For off-nominal operations, broadcast communications, depressurization valves, and maintenance activities, the A-weighted sound level (excluding impulse noise and alarm signals) shall be less than 85 dBA, regardless of time duration; except in the case of depressurization valves, the noise attenuation effectiveness of hearing protection or communications headsets may not be used to satisfy this requirement.		

Downloaded from http://www.everyspec.com

NASA-STD-3001, Volume 2, Revision B				
Section	**Description**	**Requirement in this Standard**	**Applicable (Enter Yes or No)**	**Comments**
6.6.1.6	Continuous Noise Limits	[V2 6078] In spacecraft work areas, where good voice communications and habitability are required, SPLs of continuous noise (not including impulse noise) shall be limited to the values given by the Noise Criterion (NC)-50 curve in Figure 9, NC Curves, and Table 7, Octave Band SPL limits for Continuous Noise, dB re 20 μPa; the noise attenuation effectiveness of hearing protection or communications headsets may not be used to satisfy this requirement.		

Downloaded from http://www.everyspec.com

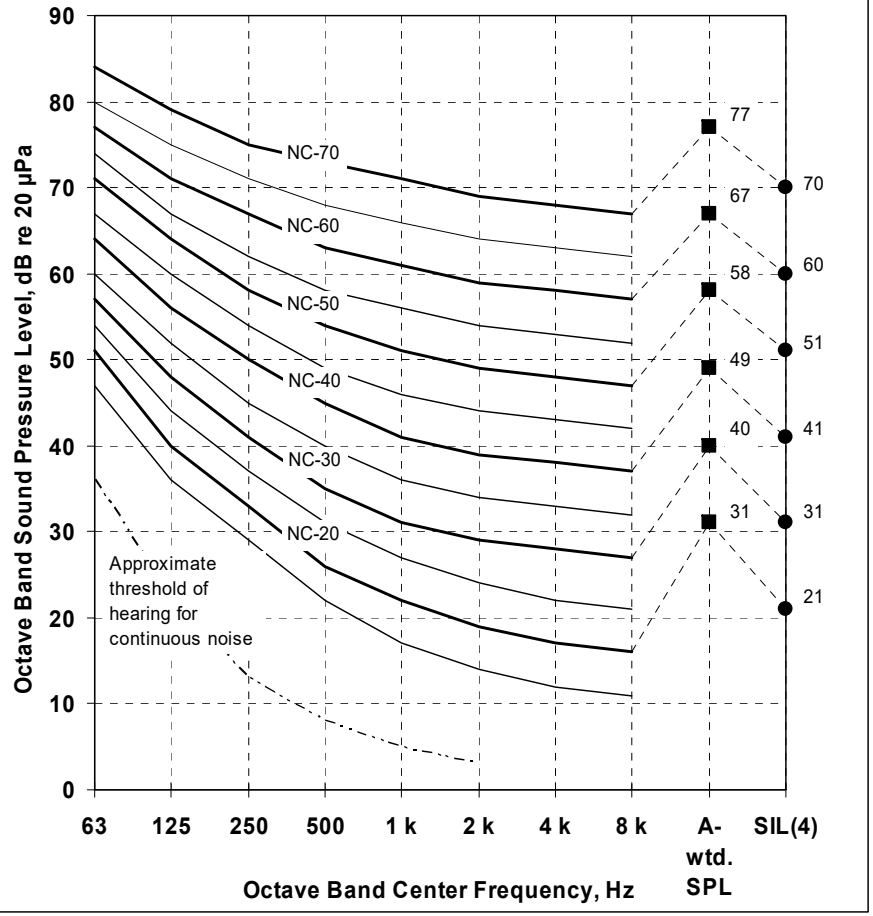

Figure 9—NC Curves

Note: Corresponding A-weighted SPLs and speech interference levels (SILs) are given for reference only (Beranek and Ver. 1992). SIL (4) is Speech Interference Level, 4-band method.

Downloaded from http://www.everyspec.com

NASA-STD-3001, Volume 2, Revision B				
Section	**Description**	**Requirement in this Standard**	**Applicable (Enter Yes or No)**	**Comments**
		Table 7—Octave Band SPL Limits for Continuous Noise, dB re 20 µPa		

	Octave Band Center Frequency (Hz)									
	63	125	250	500	1 k	2 k	4 k	8 k	16 k	NC
Work Areas Maximum (NC-50)	71	64	58	54	51	49	48	47	46	50
Sleep Areas Maximum (NC-40)	64	56	50	45	41	39	38	37	36	40

6.6.1.7	Crew Sleep Continuous Noise Limits	[V2 6079] For missions greater than 30 days, SPLs of continuous noise shall be limited to the values given by the NC-40 curve (Figure 9 and Table 7) in crew quarters and sleep areas, for which the noise attenuation effectiveness of hearing protection is not used to satisfy this requirement.		
6.6.1.8	Intermittent Noise Limits	[V2 6080] For hardware items that operate for 8 hours or less (generating intermittent noise), the maximum noise emissions (not including impulse noise), measured 0.6 m from the loudest hardware surface, shall be determined according to Table 8, Intermittent Noise A-Weighted SPL and Corresponding Operational Duration Limits for any 24-hour Period (measured at 0.6-m distance from the source), for which the noise attenuation effectiveness of hearing protection or communications headsets is not used to satisfy this requirement.		

Table 8—Intermittent Noise A-Weighted SPL and Corresponding Operational Duration Limits for any 24-Hour Period (measured at 0.6-m distance from the source)

Maximum Noise Duration per 24-hr Period	Sound Pressure Level (dBA re 20 µPa)
8 hr	≤49
7 hr	≤50
6 hr	≤51
5 hr	≤52
4.5 hr	≤53

Downloaded from http://www.everyspec.com

NASA-STD-3001, Volume 2, Revision B				
Section	**Description**	**Requirement in this Standard**	**Applicable (Enter Yes or No)**	**Comments**
		4 hr: ≤54 3.5 hr: ≤55 3 hr: ≤57 2.5 hr: ≤58 2 hr: ≤60 1.5 hr: ≤62 1 hr: ≤65 30 min: ≤69 15 min: ≤72 5 min: ≤76 2 min: ≤78 1 min: ≤79 Not allowed *: ≥80 * To leave a margin from the 85-dBA nominal hazardous noise limit		
6.6.1.9	Alarm Maximum Sound Level Limit	[V2 6081] The maximum alarm signal A-weighted sound level shall not exceed 95 dBA at the operating position of the intended receiver.		
6.6.1.10	Annoyance Noise Limits for Crew Sleep	[V2 6082] With the exception of communications and alarms, the system shall limit impulse and intermittent noise levels at the crewmember's head location to 10 dB above background noise levels during crew sleep periods, and the noise attenuation effectiveness of hearing protection may not be used to satisfy this requirement.		
6.6.1.11	Impulse Noise Limit	[V2 6083] The system shall limit impulse noise measured at the crewmember's head location to less than 140 dB peak SPL during all mission phases except launch and entry; the noise attenuation effectiveness of hearing protection or communications headsets may not be used to satisfy this requirement.		
6.6.1.12	Narrow-Band Noise Limits	[V2 6084] The maximum SPL of narrow-band noise components and tones shall be limited to at least 10 dB less than the broadband SPL of the octave band that contains the component or tone.		
6.6.1.13	Infrasonic Sound Pressure Limits	[V2 6085] Infrasonic SPLs, including frequencies from 1 to 20 Hz but not including impulse noise, shall be limited to less than 150 dB at the crewmember's head location; the noise attenuation effectiveness of hearing protection or communications headsets may not be used to satisfy this requirement.		
6.6.1.14	Noise Limit for Personal	[V2 6106] The system shall limit the maximum A-weighted sound level at the crewmember's ear created by a personal communication device to 115 dBA or less.		

Downloaded from http://www.everyspec.com

NASA-STD-3001, Volume 2, Revision B				
Section	**Description**	**Requirement in this Standard**	**Applicable (Enter Yes or No)**	**Comments**
	Communication Devices			
6.6.2.1	Acoustic Monitoring	[V2 6087] Broadband and frequency-dependent SPLs shall be monitored and quantified as needed for crew health and safety.		
6.6.2.2	Individual Noise Exposure Monitoring	[V2 6088] Noise exposure levels shall be monitored and quantified for each crewmember as needed for crew health and safety.		
6.7.1.1	Vibration During Pre-Flight	[V2 6089] The system shall limit vibration to the crew such that the frequency-weighted acceleration between 0.1 to 0.5 Hz in each of the X, Y, and Z axes is less than 0.05 g (0.5 m/s^2) root mean square (RMS) for each 10-minute interval during pre-launch (when calculated in accordance with ISO 2631-1:1997, Mechanical vibration and shock - Evaluation of human exposure to whole-body vibration - Part 1: General requirements, Annex D, Equation D-1).		
6.7.1.2	Vibration Exposures During Dynamic Phases of Flight	[V2 6090] The system **shall** limit vibration during dynamic phases of flight to the crew such that the vectorial sum of the X, Y, and Z accelerations between 0.5 and 80 Hz, calculated in 1-s intervals and weighted in accordance with ISO 2631-1:1997(E), is less than or equal to the levels plotted for the accumulated durations in Table 9, Frequency-Weighted Vibration Limits by Exposure Time during Dynamic Phases of Flight.		

Downloaded from http://www.everyspec.com

<table>
<tr><th colspan="5">NASA-STD-3001, Volume 2, Revision B</th></tr>
<tr><th>Section</th><th>Description</th><th>Requirement in this Standard</th><th>Applicable (Enter Yes or No)</th><th>Comments</th></tr>
<tr><td></td><td></td><td>
Table 9—Frequency-Weighted Vibration Limits by Exposure Time during Dynamic Phases of Flight
<table>
<tr><th>Maximum Vibration Exposure Duration per 24-hr Period</th><th>Maximum Frequency-Weighted Acceleration</th></tr>
<tr><td>10 min</td><td>3.9 m/s^2 RMS (0.4 g RMS)</td></tr>
<tr><td>1 min</td><td>5.9 m/s^2 RMS (0.6 g RMS)</td></tr>
</table>
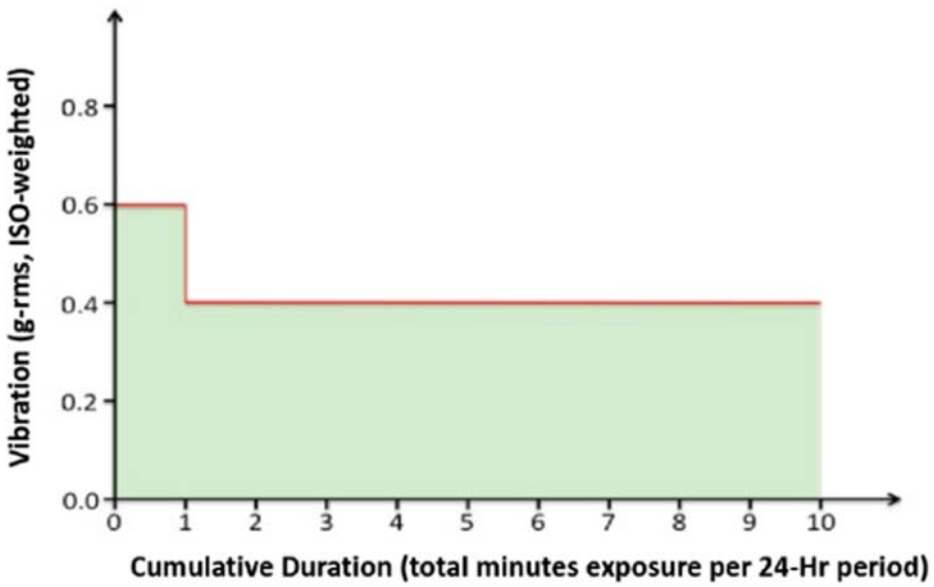

</td><td></td><td></td></tr>
<tr><td>6.7.1.3</td><td>Long-Duration Vibration Exposure Limits for Health</td><td>[V2 6091] The system shall limit vibration to the crew such that the vectorial sum of the X, Y, and Z frequency-weighted accelerations, as computed according to ISO 2631-1:1997(E), do not exceed the minimum health guidance caution zone level defined by Figure B.1 in ISO 2631-1:1997(E), Annex B.</td><td></td><td></td></tr>
</table>

Downloaded from http://www.everyspec.com

NASA-STD-3001, Volume 2, Revision B				
Section	**Description**	**Requirement in this Standard**	**Applicable (Enter Yes or No)**	**Comments**
	during Non-Sleep Phases of Mission			
6.7.1.4	Vibration Exposure Limits during Sleep	[V2 6092] The system shall limit vibration to the crew such that the acceleration between 1.0 and 80 Hz in each of the X, Y, and Z axes, weighted in accordance with ISO 20283-5, Mechanical vibration—Measurement of vibration on ships; Part 5 - Guidelines for the measurement, evaluation and reporting of vibration with regard to habitability on passenger and merchant ships, Annex A, is less than 0.01 g (0.1 m/s^2) RMS for each 2-minute interval during the crew sleep period.		
6.7.1.5	Vibration Limits for Performance	[V2 6093] Crew task performance (e.g., motor control accuracy and precision, vision/readability, speech clarity, attentional focus) shall not be degraded by vibration.		
6.7.2	Hand Vibration	[V2 6094] The system, including tools, equipment, and processes, shall limit vibration to the crewmembers' hands such that the accelerations, as computed according to ANSI S2.70-2006, Guide for the Measurement and Evaluation of Human Exposure to Vibration Transmitted to the Hand, do not exceed the Daily Exposure Action Value defined by ANSI S2.70-2006, Annex A, Figure A.1.		
6.8.1.1	Ionizing Radiation Protection Limit	[V2 6095] The program shall set system design requirements to prevent potential crewmembers from exceeding PELs as set forth in NASA-STD-3001, Volume 1.		
6.8.1.2	Crew Age/Gender Definition for Design Requirements	[V2 6096] The program shall set an age- and gender-dependent baseline of crew makeup when setting radiation design requirements.		
6.8.1.3	Crew Radiation Exposure Limits	[V2 6097] The program shall design systems using the ALARA principle to limit crew radiation exposure.		
6.8.1.4	Radiation Environments	[V2 6098] The program shall specify the radiation environments to be used in verifying the radiation design requirements.		
6.8.1.5	Space Weather Monitoring	[V2 6099] The program shall set requirements specifying appropriate capabilities to be provided for real-time monitoring of space weather for characterization of the radiation environment and operational response by ground personnel and the crew.		
6.8.1.6	Ionizing Radiation Alerting	[V2 6100] The system shall include a method to alert all crewmembers when radiation levels are expected to exceed acceptable levels.		
6.8.1.7	Ionizing Radiation Dose Monitoring	[V2 6101] To characterize and manage radiation exposures, the program shall provide methods for monitoring personal dose and dose equivalent exposure, ambient monitoring of particle fluence as a function of direction, energy, and elemental charge and monitoring of ambient dose and ambient dose equivalent.		

Downloaded from http://www.everyspec.com

NASA-STD-3001, Volume 2, Revision B				
Section	**Description**	**Requirement in this Standard**	**Applicable (Enter Yes or No)**	**Comments**
6.8.2.1	RF Non-Ionizing Radiation Exposure Limits	[V2 6102] The system shall protect the crew from exposure to RF radiation to the limits stated in Table 10, Maximum Permissible Exposure (MPE) to RF Electromagnetic Fields (modified from IEEE C95.1, IEEE Standard for Safety Levels with Respect to Human Exposure to Radio-Frequency Electromagnetic Fields, 3 kHz to 300 GHz – Description, lower tier), and shown graphically in Figure 10, RF Electromagnetic Field Exposure Limits.		

Table 10—Maximum Permissible Exposure (MPE) to RF Electromagnetic Fields (modified from IEEE C95.1, lower tier)

Frequency Range (MHz)	RMS Electric Field Strength (E)[a] (V/m)	RMS Magnetic Field Strength (H)[a] (A/m)	RMS Power Density (S) E–Field, H–Field (W/m^2)	Averaging Time[b] $\|E\|^2$, $\|H\|^2$, or S (min)	
0.1 – 1.34	614	$16.3/f_M$	$(1{,}000,\ 100{,}000/f_M^2)$ [c]	6	6
1.34 - 3	$823.8/f_M$	$16.3/f_M$	$(1{,}800/f_M^2,\ 100{,}000/f_M^2)$	$f_M^2/0.3$	6
3 - 30	$823.8/f_M$	$16.3/f_M$	$(1{,}800/f_M^2,\ 100{,}000/f_M^2)$	30	6
30 - 100	27.5	$158.3/f_M^{1.668}$	$(2,\ 9{,}400{,}000/f_M^{3.336})$	30	$0.0636 f_M^{1.337}$
100 - 300	27.5	0.0729	2	30	30
300 - 5000	–	–	$f/150$	30	
5000 - 15000	–	–	$f/150$	$150/f_G$	
15000 – 30,000	–	–	100	$150/f_G$	
30,000 – 100,000	–	–	100	$25.24/f_G^{0.476}$	
100,000 – 300,000	–	–	100	$5048/[(9f_G-700)f_G^{0.476}]$	

Note: f_M is the frequency in MHz; f_G is the frequency in GHz.

(a) For exposures that are uniform over the dimensions of the body such as certain far-field plane-wave exposures, the exposure field strengths and power densities are compared with the MPEs in the table.

Downloaded from http://www.everyspec.com

NASA-STD-3001, Volume 2, Revision B				
Section	**Description**	**Requirement in this Standard**	**Applicable (Enter Yes or No)**	**Comments**
		For non-uniform exposures, the mean values of the exposure fields, as obtained by spatially averaging the squares of the field strengths or averaging the power densities over an area equivalent to the vertical cross section of the human body (projected area) or a smaller area, depending on the frequency, are compared with the MPEs in the table. For further details, see the notes to Table 8 and Table 9 of IEEE C95.1. (b) The left column is the averaging time for $\|E\|^2$; the right column is the averaging time for $\|H\|^2$. For frequencies greater than 400 MHz, the averaging time is for power density (S). (c) These plane-wave equivalent power density values are commonly used as a convenient comparison with MPEs at higher frequencies and are displayed on some instruments in use. 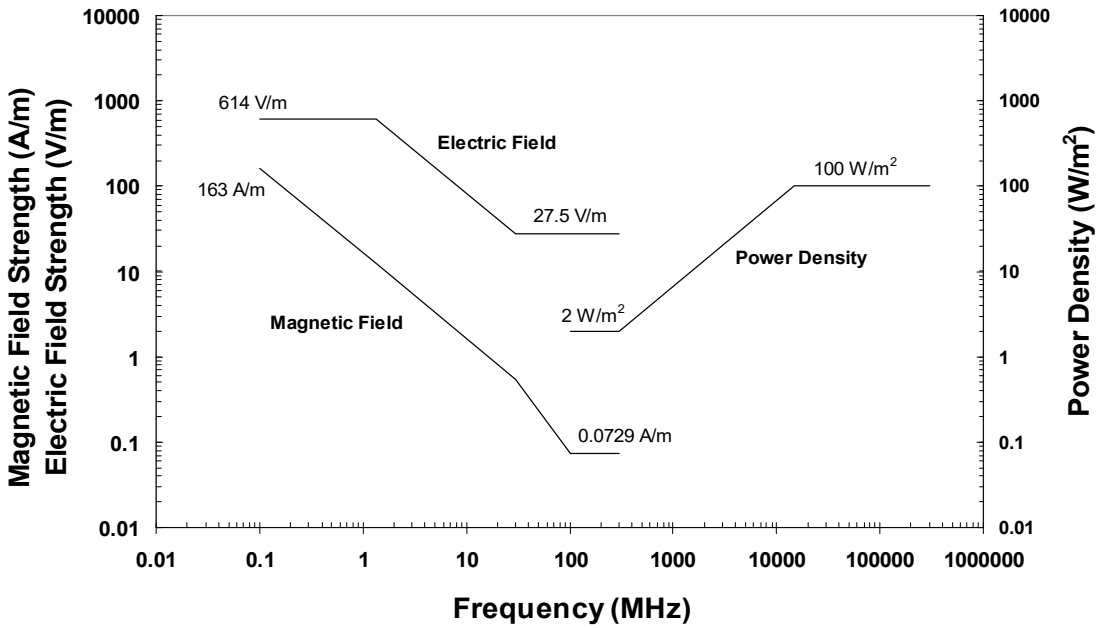 (Illustrated to show whole-body resonance effects around 100 MHz) (modified from IEEE C95.1 **Figure 10—RF Electromagnetic Field Exposure Limits**		

Downloaded from http://www.everyspec.com

NASA-STD-3001, Volume 2, Revision B				
Section	**Description**	**Requirement in this Standard**	**Applicable (Enter Yes or No)**	**Comments**
6.8.2.2	Laser Exposure Limits	[V2 6103] The system shall protect the crew from exposure to lasers in accordance with the limits in ANSI Z136.1, American National Standard for Safe Use of Lasers, and ACGIH, Threshold Limit Values (TLVs®) and Biological Exposure Indices (BEIs®) Based on the Documentation of the Threshold Limit Values for Chemical Substances and Physical Agents & Biological Exposure Indices, for limiting skin and ocular exposure to both continuous wave and repetitively pulsed lasers.		
6.8.2.3	Limits on Exposure to Incoherent Electromagnetic Radiation	[V2 6104] For crew exposure to the electromagnetic spectrum from the ultraviolet (180 nm) to the far infrared (3,000 nm), the methodologies given in ACGIH shall be adopted and amended for use by NASA through the relaxation of the limits by a factor of 5, with the exception of the calculation for ultraviolet exposure, which is not amended.		
7.1.1.1	Food Quality	[V2 7001] The food system shall provide the capability to maintain food safety and nutrition during all phases of the mission.		
7.1.1.2	Food Acceptability	[V2 7002] The system shall provide food that is acceptable to the crew for the duration of the mission.		
7.1.1.3	Food Caloric Content	[V2 7003] The food system shall provide each crewmember with a minimum number of calories per day, based upon estimated energy requirements (EER) with an activity factor of 1.25 (active) as calculated according to Table 11, EER Equations.		
	Table 11—EER Equations Nominal Metabolic Intake EER for men 19 years old and older EER (kcal/day) = 622 – 9.53 × Age [y] + 1.25 × (15.9 × Body Mass [kg] + 539.6 × Height [m]) EER for women 19 years old and older EER = 354 – 6.91 × Age [y] + 1.25 × (9.36 × Body Mass [kg] + 726 × Height [m])			
7.1.1.4	EVA Food Caloric Content	[V2 7004] For crewmembers performing EVA operations, the food system shall provide an additional 837 kJ (200 kcal) per EVA hour above nominal metabolic intake as defined by section 7.1.1.3, Food Caloric Content [V2 7003], in this NASA Technical Standard.		
7.1.1.5	Food Macronutrients	[V2 7005] The diet for each crewmember shall include macronutrients in the quantities listed in Table 12, Macronutrient Guidelines for Spaceflight.		

Downloaded from http://www.everyspec.com

<table>
<tr><th colspan="5">NASA-STD-3001, Volume 2, Revision B</th></tr>
<tr><th>Section</th><th>Description</th><th>Requirement in this Standard</th><th>Applicable (Enter Yes or No)</th><th>Comments</th></tr>
<tr><td></td><td colspan="2">

Table 12—Macronutrient Guidelines for Spaceflight

<table>
<tr><th>Nutrients</th><th>Daily Dietary Intake*</th></tr>
<tr><td rowspan="3">Protein</td><td>0.8 g/kg</td></tr>
<tr><td>And ≤35% of the total daily energy intake</td></tr>
<tr><td>And 2/3 of the amount in the form of animal protein and 1/3 in the form of vegetable protein</td></tr>
<tr><td>Carbohydrate</td><td>50–55% of the total daily energy intake</td></tr>
<tr><td>Fat</td><td>25–35% of the total daily energy intake</td></tr>
<tr><td>Ω-6 fatty acids</td><td>14 g</td></tr>
<tr><td>Ω-3 fatty acids</td><td>1.1–1.6 g</td></tr>
<tr><td>Saturated fat</td><td><7% of total daily energy intake</td></tr>
<tr><td>Trans fatty acids</td><td><1% of total daily energy intake</td></tr>
<tr><td>Cholesterol</td><td><300 mg/day</td></tr>
<tr><td>Fiber</td><td>21-38 g</td></tr>
</table>

* This field is only expressed in metric units of measure.

</td><td></td><td></td></tr>
<tr><td>7.1.1.6</td><td>Food Micronutrients</td><td>

[V2 7006] The diet for each crewmember shall include micronutrients in the quantities listed in Table 13, Micronutrient Guidelines for Spaceflight.

Table 13—Micronutrient Guidelines for Spaceflight

<table>
<tr><th>Vitamin or Mineral</th><th>Daily Dietary Intake*</th></tr>
<tr><td>Vitamin A</td><td>700–900 µg</td></tr>
<tr><td>Vitamin D</td><td>25 µg</td></tr>
<tr><td rowspan="2">Vitamin K</td><td>Women: 90 µg</td></tr>
<tr><td>Men: 120 µg</td></tr>
<tr><td>Vitamin E</td><td>15 mg</td></tr>
<tr><td>Vitamin C</td><td>90 mg</td></tr>
<tr><td>Vitamin B_{12}</td><td>2.4 µg</td></tr>
<tr><td>Vitamin B_6</td><td>1.7 mg</td></tr>
<tr><td rowspan="2">Thiamin</td><td>Women: 1.1 mg</td></tr>
<tr><td>Men: 1.2 mg</td></tr>
<tr><td>Riboflavin</td><td>1.3 mg</td></tr>
</table>

</td><td></td><td></td></tr>
</table>

Downloaded from http://www.everyspec.com

NASA-STD-3001, Volume 2, Revision B							
Section	**Description**	**Requirement in this Standard**				**Applicable (Enter Yes or No)**	**Comments**
			Folate	400 µg			
			Niacin	16 mg niacin equivalents			
			Biotin	30 µg			
			Pantothenic acid	5 mg			
			Calcium	1000–1500 mg			
			Phosphorus	700 mg			
				And ≤1.5 × calcium intake			
			Magnesium	Women: 320 mg			
				Men: 420 mg			
				And ≤350 mg from supplements only			
			Sodium	1500–2300 mg			
			Potassium	4.7 g			
			Iron	8–10 mg			
			Copper	0.5–0.9 mg			
			Manganese	Women: 1.8 mg			
				Men: 2.3 mg			
			Fluoride	Women: 3 mg			
				Men: 4 mg			
			Zinc	11 mg			
			Selenium	55–400 µg			
			Iodine	150 µg			
			Chromium	35 µg			
			Note: Compiled from Nutrition Requirements, Standards, and Operating Bands for Exploration Missions, JSC NASA Nutritional Biochemistry Group. * This field is only expressed in metric units of measure.				

Downloaded from http://www.everyspec.com

7.1.1.7	Food Microorganism Levels	[V2 7007] Microorganism levels in the food shall not exceed those specified in Table 14, Food Microorganism Levels (JSC-16888, Microbiology Operations Plan for Spaceflight).		

Table 14—Food Microorganism Levels

Area/Item	Microorganism Tolerances	
Food Production Area	**Samples Collected**	**Limits**
Surfaces	3 surfaces sampled[a]	3000 Colony Forming Units/ft^2 (total aerobic count)
Packaging Materials	Before use	3000 CFU per Pouch, Septum, 25 cm^2 or base
Air	1 sample of 320 L monthly	113 CFU/320 L (total aerobic count)

Food Product	Factor	Limits
Non-Thermostabilized[b]	Total aerobic count	20,000 CFU/g for any single sample (or if any two samples from a lot exceed 10,000 CFU/g)
	Enterobacteriaceae	100 CFU/g for any single sample (or if any two samples from a lot exceed 10 CFU/g). No detected serious or severe hazard human enteric pathogenic organisms
	Salmonella	0 CFU/g for any single sample

Downloaded from http://www.everyspec.com

			Yeasts and molds	1000 CFU/g for any single sample (or if any two samples from a lot exceed 100 CFU/g or if any two samples from a lot exceed 10 CFU/g *Aspergillis flavus*)			
			Commercially Sterile Products (thermostabilized and irradiated)	No sample submitted for microbiological analysis	100% inspection for package integrity		
			Notes: a. Samples collected only on days that food facility is in operation. Additional environmental samples will be collected when there is a 1-hour break in activity, or after 5 hours of continuous work. b. Food samples considered "finished" products that do not require additional repackaging are tested only for total aerobic counts.				
7.1.2.1	Food Preparation	[V2 7008] The system shall provide the capability for preparation, consumption, and stowage of food.					
7.1.2.2	Food Preparation and Cleanup	[V2 7009] The food system shall allow the crew to unstow supplies, prepare meals, and clean up for all crewmembers within the allotted meal schedule.					
7.1.2.3	Food Contamination Control	[V2 7010] The food storage, preparation, and consumption areas shall be designed and located to protect against cross-contamination between food and the environment.					
7.1.2.4	Food and Beverage Heating	[V2 7011] The system shall provide the capability to heat food and beverages to a temperature appropriate for the given item.					
7.1.2.5	Dining Accommodations	[V2 7012] Crewmembers shall have the capability to dine together.					
7.1.2.6	Food System Waste	[V2 7013] The system shall provide readily accessible trash collection and control of food system waste.					
7.1.2.7	Food Spill Control	[V2 7014] The system shall provide the ability to control and remove food particles and spills.					
7.1.2.8	Food System Cleaning and Sanitizing	[V2 7015] The system shall provide methods for cleaning and sanitizing food facilities, equipment, and work areas.					
7.21	Personal Hygiene Capability	[V2 7016] The system shall provide the capability for oral hygiene, personal grooming, and body cleansing.					
7.2.2	Body Cleansing Privacy	[V2 7017] The system shall provide for privacy during body cleansing.					
7.2.3	Personal Hygiene Provision	[V2 7018] Personal hygiene items shall be provided for each crewmember.					

Downloaded from http://www.everyspec.com

7.2.4	Hygiene Maintainability	[V2 7019] The system shall provide an environmentally compatible sanitization method for personal hygiene facilities and equipment.		
7.3.1.1	Body Waste Management Capability	[V2 7020] The system shall provide the capability for collection, containment, and disposal of body waste.		
7.3.1.2	Body Waste Management System Location	[V2 7021] The body waste management system shall be isolated from the food preparation and consumption areas for aesthetic and hygienic purposes.		
7.3.1.3	Body Waste Management Privacy	[V2 7022] The system shall provide privacy during use of the body waste management system.		
7.3.1.4	Body Waste Management Provision	[V2 7023] Body waste management supplies shall be accessible to and within reach of crewmembers using the waste management system.		
7.3.1.5	Body Waste Accommodation	[V2 7024] The body waste management system shall allow a crewmember to urinate and defecate simultaneously.		
7.3.1.6	Body Waste Containment	[V2 7025] The system shall prevent the release of body waste from the waste management system.		
7.3.1.7	Body Waste Odor	[V2 7026] The system shall provide odor control for the waste management system.		
7.3.1.8	Body Waste Trash Receptacle Accessibility	[V2 7027] Body waste management trash collection shall be accessible to and within reach of crewmembers using the waste management system.		
7.3.1.9	Private Body Inspection Accommodation	[V2 7028] The body waste management system shall provide a means and sufficient volume for crewmembers to perform private bodily self-inspection and cleaning after urination and defecation.		
7.3.1.10	Body Waste Management Maintenance	[V2 7029] All body waste management facilities and equipment shall be capable of being cleaned, sanitized, and maintained.		
7.3.2.1	Average Feces per Day	[V2 7030] The human body waste management system **shall** be capable of collecting and containing an average of 150 g (0.3 lb) and 150 ml (5 oz) of solid fecal matter per crewmember per defecation at an average of two defecations per day.		
7.3.2.2	Maximum Feces per Event	[V2 7031] The nominal human body waste management system **shall** be capable of collecting and containing a maximum of 500 g (1.1 lb) and 500 ml (16.9 oz) of fecal matter per crewmember in a single defecation.		
7.3.2.3	Average Diarrhea per Day	[V2 7032] The nominal human body waste management system shall be capable of collecting and containing eight diarrheal events (average volume of 500 ml (16.9 oz)) per crewmember per day for up to 2 days.		
7.3.2.4	Maximum Diarrhea per Event	[V2 7033] The nominal human body waste management system **shall** be capable of collecting and containing a maximum diarrhea volume of 1.5 L (0.4 gal) of diarrhea in a single event.		

Downloaded from http://www.everyspec.com

7.3.2.5	Fecal and Urine Elimination Concurrence	[V2 7085] The body waste management system shall be capable of collecting and containing all waste during simultaneous defecation and urination.		
7.3.2.6	Urine Capacity	[V2 7034] The human body waste management system shall be capable of collecting 1L (33.8 oz) of urine per event with up to six urination events per crewmember per day.		
7.3.2.7	Urine per Crewmember	[V2 7035] The human body waste management system shall be capable of collecting and containing a maximum total urine output volume of $V_u = 3 + 2t$ liters per crewmember, where t is the mission length in days.		
7.3.2.8	Urine Rate	[V2 7036] The human body waste management system shall be capable of collecting a maximum flow rate as high as 50 ml/s (1.9 oz/s).		
7.3.2.9	Vomitus per Collection and Containment	[V2 7037] The human body waste management system shall be capable of collecting and containing vomitus for up to eight events of an average of 500 ml (16.9 oz) in a single event.		
7.4.1	Physiological Countermeasures Capability	[V2 7038] The system shall provide countermeasures to meet crew bone, muscle, sensory-motor, and cardiovascular requirements defined in NASA-STD-3001, Volume 1.		
7.4.2	Volume Accommodations	[V2 7039] During physiological countermeasure activities, the volume provided shall accommodate a person, expected body motions, and any necessary equipment.		
7.4.3	Physiological Countermeasure Operations	[V2 7040] The physiological countermeasure system design shall allow the crew to unstow supplies, perform operations, and stow items within the allotted countermeasure schedule.		
7.4.4	Environmental Control	[V2 7041] The system environmental control shall accommodate the increased O_2 consumption and additional output of heat, CO_2, perspiration droplets, odor, and particulates generated by the crew in an exercise area.		
7.4.5	Orthostatic Intolerance Countermeasures	[V2 7042] The system shall provide countermeasures to mitigate the effects of orthostatic intolerance when transitioning from microgravity to gravity environments.		
7.5.1	Medical Capability	[V2 7043] A medical system shall be provided to the crew to meet the medical requirements of NASA-STD-3001, Volume 1, in accordance with Table 15, Medical Care Capabilities.		

Table 15—Medical Care Capabilities

Level of Care	Space Environment	Mission Duration	Capability
I	LEO	<8 days	Space Motion Sickness, Basic Life Support, First Aid, Private Audio, Anaphylaxis Response
II	LEO	<30 days	Level I + Clinical Diagnostics, Ambulatory Care, Private Video, Private Telemedicine
III	Beyond LEO	<30 days	Level II + Limited Advanced Life Support, Trauma Care, Limited Dental Care

Downloaded from http://www.everyspec.com

		IV	Lunar	>30 days	Level III + Medical Imaging, Sustainable Advanced Life Support, Limited Surgical, Dental Care		
		V	Mars Expedition		Level IV + Autonomous Advanced Life Support and Ambulatory Care, Basic Surgical Care		
7.5.2	Medical Treatment Spatial Accommodation	[V2 7044] The medical system shall provide volume and surface area to treat a patient and allow access for the medical care provider and equipment.					
7.5.3	Medical Equipment Usability	[V2 7045] Medical equipment shall be usable by non-physician crewmembers in the event that a physician crewmember is not present or is the one who requires medical treatment.					
7.5.4	Medical Treatment Restraints	[V2 7046] The capability shall exist to position and restrain a patient, care provider, and equipment during treatment.					
7.5.5	Biological Waste Containment and Disposal	[V2 7047] Biological hazards, like blood and other bodily fluids, shall be contained and safely disposed to minimize contamination of other crewmembers.					
7.5.6	Medical Equipment Disposal	[V2 7048] Sharp items such as syringe needles shall be safely disposed to prevent inadvertent injury to other crewmembers.					
7.5.7	Deceased Crew	[V2 7049] Each human spaceflight program shall provide the capability to handle deceased crewmembers.					
7.6.1.1	Stowage Provisions	[V2 7050] The system shall provide for the stowage of hardware and supplies, to include location, restraint, and protection for these items.					
7.6.1.2	Personal Stowage	[V2 7051] The system shall provide a stowage location for personal items and clothing.					
7.6.1.3	Stowage Location	[V2 7052] All relocatable items, e.g., food, EVA suits, and spare parts, shall have a dedicated stowage location.					
7.6.1.4	Stowage Interference	[V2 7053] The system shall provide defined stowage locations that do not interfere with crew operations.					
7.6.1.5	Stowage Restraints	[V2 7054] The system shall provide the capability to restrain relocatable items during microgravity, transient accelerations, and vibrations.					
7.6.2.1	Priority of Stowage Accessibility	[V2 7055] Stowage items shall be accessible in accordance with their use, with the easiest accessibility for mission-critical and most frequently used items.					
7.6.2.2	Stowage Operation without Tools	[V2 7056] Stowage containers and restraints shall be operable without the use of tools.					
7.6.2.3	Stowage Access while Suited	[V2 7057] Stowed items to be used when crewmembers are suited shall be accessible by a suited crewmember.					
7.6.3	Identification System	[V2 7058] The stowage identification system shall be compatible with the inventory management system.					
7.7.1	Inventory Tracking	[V2 7059] The system shall provide an inventory management system to track the locations and quantities of items (including hazardous trash) throughout the mission.					
7.7.2	Inventory Operations	[V2 7060] The system shall be designed to allow inventory management functions to be completed within the allotted schedule.					
7.7.3	Nomenclature Consistency	[V2 7061] The nomenclature used to refer to the items tracked by the inventory management system shall be consistent with procedures and labels.					

Downloaded from http://www.everyspec.com

7.7.4	Unique Item Identification	[V2 7062] Items that need to be uniquely identified shall have a unique name.		
7.7.5	Interchangeable Item Nomenclature	[V2 7063] Items within the inventory management system that are identical and interchangeable shall have identical nomenclature.		
7.8.1.1	Trash Accommodation	[V2 7064] The system shall provide a trash management system to accommodate (stow, neutralize, and dispose) all expected wet and dry trash, including sharp items, harmful chemicals, and biological and radioactive waste.		
7.8.1.2	Trash Volume Allocation	[V2 7065] Trash stowage volumes shall be defined and allocated for each mission.		
7.8.1.3	Trash Stowage Interference	[V2 7066] The system shall provide defined trash stowage that does not interfere with crew operations.		
7.8.2	Trash Odor Control	[V2 7067] The trash management system shall provide odor control of trash.		
7.8.3	Trash Contamination Control	[V2 7068] The trash management system shall prevent the release of trash into the habitable environment.		
7.8.4	Labeling of Hazardous Waste	[V2 7069] Hazardous waste shall be labeled on the outermost containment barrier, and available as viewed from different sides of the container that the crew may regard it, to identify the hazard type and level contained (in accordance with JSC-26895).		
7.9.1	Sleep Accommodation	[V2 7070] The system shall provide volume, restraint, accommodations, environmental control (e.g., vibration, lighting, noise, and temperature), and degree of privacy for sleep for each crewmember, to support crew health and performance.		
7.9.2	Behavioral Health Privacy	[V2 7071] For long duration missions (> 30 days), individual privacy shall be provided to accommodate social retreat, in order to support crew health and performance.		
7.9.3	Partial-g Sleeping	[V2 7073] The system shall provide for horizontal sleep surface areas for partial-g and 1-g environments.		
7.10.1	Clothing Quantity	[V2 7074] Clean, durable clothing shall be provided in quantities sufficient to meet crew needs.		
7.10.2	Exclusive Use	[V2 7075] Clothing shall be provided for each individual crewmember's exclusive use.		
7.10.3	Safety and Comfort	[V2 7076] Clothing shall be comfortable in fit and composition and compatible with the environment, e.g., temperature and humidity, in which it will be worn.		
7.10.4	Clothing Donning and Doffing	[V2 7077] Clothing shall be designed so that crewmembers can don or doff clothing without assistance from other crewmembers in normal as well as in emergency situations.		
7.11.1	Accessibility for Cleaning	[V2 7079] Sufficient volume shall be provided to access areas that need to be cleaned.		
7.11.2	Particulate Control	[V2 7080] The system shall be designed for access, inspection, and removal of particulates that can be present before launch or that can result from mission operations.		
7.11.3	Surface Material Selection	[V2 7081] The system shall be designed with surface materials that do not promote the growth of microorganisms.		
7.11.4	Surface Material Cleaning	[V2 7082] The system shall contain surface materials that can be easily cleaned and sanitized using planned cleaning methods.		

Downloaded from http://www.everyspec.com

7.11.5	Cleaning Materials	[V2 7083] The system shall provide cleaning materials that are effective, safe for human use, and compatible with system water reclamation, air revitalization, and waste management systems.		
7.12	Recreational Capabilities	[V2 7084] The system shall provide individual and team-oriented recreational capabilities for the crew to maintain behavioral and psychological health.		
8.1.1	Volume Allocation	[V2 8001] The system shall provide the volume (operational envelope) and interior configuration necessary for the crew to perform all mission tasks, using necessary tools and equipment to meet mission goals and objectives and support human performance and behavioral health.		
8.1.2	Volume for Crewmember Accommodation	[V2 8002] The system shall provide the volume necessary to accommodate the expected number of crewmembers.		
8.1.3	Volume for Mission Accommodation	[V2 8003] The system shall provide the volume necessary to accommodate the number of mission and contingency days.		
8.2.1.1	Functional Arrangement	[V2 8005] Habitability functions shall be located based on the use of common equipment, interferences, and the sequence and compatibility of operations.		
8.2.1.2	Interference	[V2 8006] The system shall separate functional areas whose functions would detrimentally interfere with each other.		
8.2.2.1	Spatial Orientation	[V2 8007] Interface elements within a crew station shall be consistent in spatial orientation.		
8.2.2.2	Consistent Orientation	[V2 8008] In microgravity, the system shall establish a local vertical orientation.		
8.2.2.3	Interface Orientation	[V2 8009] Interface elements within a crew station shall have the same orientation in roll as the sagittal plane of the crewmember's head.		
8.2.3.1	Location Identifiers	[V2 8010] A standard location coding system shall be provided to uniquely identify each predefined location within the system.		
8.2.3.2	Location Aids	[V2 8011] The system shall provide aids to assist crewmembers in locating items or places within the system and orienting themselves in relation to those items or places.		
8.2.3.3	Visual Distinctions	[V2 8012] The system shall provide visual distinctions for adjacent but functionally separate workstations.		
8.3.1	Internal Translation Paths	[V2 8013] The system shall provide intravehicular activity (IVA) translation paths to allow for the movement of crew and equipment within the time constraints of both nominal operational, contingency, and emergency conditions.		
8.3.2	Emergency Translation Paths	[V2 8014] The spacecraft (excluding spacesuits) shall be configured such that the crew can ingress or egress (including hatch operation, if applicable) within the time required to preserve crew health and safety in the event of an emergency.		
8.3.3	Ingress, Egress and Escape Translation Paths	[V2 8015] The system shall provide translation paths for ingress, egress, and escape of suited crewmembers.		
8.3.4	Translation Path Interference	[V2 8016] Translation paths shall allow movement of crew and equipment without interfering with crew activities.		
8.3.5	Simultaneous Use	[V2 8017] Where appropriate, the translation path size shall accommodate simultaneous use by crewmembers.		

Downloaded from http://www.everyspec.com

8.3.6	Hazard Avoidance	[V2 8018] Translation paths shall be designed to prevent exposure to hazards.		
8.3.7	Path Visibility	[V2 8019] Emergency paths shall be marked and be visible under nominal operational, contingency, and emergency conditions.		
8.3.8	Crew Egress Translation Path - Ground	[V2 8020] The system shall provide a translation path for assisted ground egress of an incapacitated suited or unsuited crewmember.		
8.3.9	Crew Ingress/Egress Translation Path in Space	[V2 8021] The system shall provide an in-space translation path for assisted ingress and egress of an incapacitated suited or unsuited crewmember.		
8.3.10	Translation Paths for Suited Crewmembers	[V2 11002] The expected translation paths shall be large enough to accommodate a suited crewmember and the motions necessary for translation.		
8.3.11	EVA Translation Path Hazard Avoidance	[V2 11005] EVA translation paths shall prevent exposure to hazards.		
8.4.1.1	Hatch Cover and Door Operation without Tools	[V2 8022] Hatch covers and doors shall be unlatched and opened and latched and closed without the use of tools from either side by a single suited crewmember.		
8.4.1.2	Unlatching Hatch Covers	[V2 8023] Hatch covers shall require two distinct and sequential operations to unlatch.		
8.4.1.3	Hatch Cover and Door Operating Times	[V2 8024] For nominal operations, hatch covers and doors shall be operable by a single crewmember in no more than 60 seconds, from both sides of the hatch.		
8.4.1.4	Hatch Cover and Door Operating Force	[V2 8025] The forces required to operate each crew interface for the hatch covers and doors shall be within the crewmember strength defined by section 4.1.1, Data Sets [V2 4001], for the worst-case pressure differential and anticipated encumbering equipment and clothing.		
8.4.1.5	Hatch Cover and Door Gravity Operations	[V2 8026] Hatch covers and doors shall be operable in all expected gravity conditions and orientations to which they are exposed.		
8.4.2.1	Hatch Size and Shape	[V2 8027] Hatches and doorways shall be sized and shaped to accommodate all planned translations based on task analysis, including unrestricted passage of a suited crewmember and crewmembers carrying cargo or equipment.		
8.4.2.2	Pressure Equalization across the Hatch	[V2 8028] Each side of each hatch shall have manual pressure equalization capability with its opposite side, achievable from that side of the pressure hatch by a suited or unsuited crewmember.		
8.4.2.3	Visibility across the Hatch	[V2 8029] The system shall provide a window for direct, non-electronic visual observation of the environment on the opposite side of the hatch.		
8.4.3.1	Hatch Cover and Door Interference	[V2 8030] When opened, hatch covers and doors shall allow for unrestricted flow of traffic.		
8.4.3.2	Hatch Cover Closure and Latching Status Indication	[V2 8031] The pressure hatch covers shall indicate closure and latching status on both sides of the hatch.		

Downloaded from http://www.everyspec.com

8.4.3.3	Hatch Cover Pressure Indication	[V2 8032] Pressure hatch covers shall indicate, on both sides of the hatch, pressure differential across the hatch.		
8.5.1	Crew Restraint Provision	[V2 8033] Crew restraints shall be provided to assist in the maintaining of body position and location in reduced gravity conditions or during high accelerations.		
8.5.2	Crew Restraint Design	[V2 8034] Crew restraints shall be designed to accommodate the crewmember for the duration of the task.		
8.5.3	Crew Restraint Posture Accommodation	[V2 8035] Crew restraints for microgravity applications shall be compatible with the neutral body posture.		
8.5.4	Crew Restraint Interference	[V2 8036] Crew restraints shall not interfere with crewmembers' performance of tasks.		
8.5.5	Crew Restraints for Controls Operation	[V2 8037] Crew restraints shall provide for the operation of controls during reduced gravity, as well as during dynamic or multi-axis accelerations.		
8.5.6	Mobility Aid Standardization	[V2 8038] Mobility aids shall be standardized, clearly distinguishable, and located to aid the crew in starting or stopping movement, changing direction or speed, or translating equipment.		
8.5.7	Mobility Aid Structural Strength	[V2 8039] All fixed and portable IVA mobility aids shall be designed to withstand expected forces of the crew without failure or sustaining damage.		
8.5.8	Mobility Aid for Assisted Ingress and Egress	[V2 8040] Mobility aids shall be provided for the assisted ingress and egress of suited or unsuited crewmembers.		
8.5.9	Unassisted Ingress, Egress, and Escape Mobility Aids	[V2 8041] Mobility aids shall be provided for ingress, egress, and escape of crewmembers without assistance from other crew or ground personnel.		
8.5.10	IVA Operations Mobility Aids	[V2 8042] Where appropriate, mobility aids shall be provided for the crew to conduct IVA operations.		
8.5.11	Mobility Aid Provision for Suited Operations	[V2 11003] Mobility aids shall be provided along expected translation paths of suited crewmembers at an interval that accommodates the suited crewmember's reach.		
8.5.12	Restraints for Suited Operations – Provision	[V2 11012] Restraints shall be placed to ensure the optimum reach and work envelope of the suited crewmember and be adjustable to maximize the work envelope.		
8.6.1.1	Window Provisioning	[V2 8043] The system shall provide at least one window on all spacecraft that enables fields of view to support planned crew tasks.		
8.6.1.2	Window Optical Properties	[V2 8045] System windows shall have optical properties commensurate with their tasking, in accordance with JSC-66320, Optical Property Requirements for Glasses, Ceramics, and Plastics in Spacecraft Window Systems.		
8.6.1.3	Window Obstruction	[V2 8046] Window fields of view shall not be obstructed or obscured in any way except for: 1) hardware designed and intended to protect and cover windows; 2) hardware used in conjunction with piloting, (i.e., Head's Up Display (HUD), Crew Optical Alignment System (COAS), or other similar equipment); 3) the outer mold line and hull structure of the vehicle, other windows and window mullions; and, 4) instrumentation applied within 13 mm (0.5 in) of the perimeter of the viewing area.		

Downloaded from http://www.everyspec.com

8.6.2.1	Window Light Blocking	[V2 8049] Each system window shall be equipped with an opaque shade or shutter that prevents external light from entering the crew compartment, such that the interior light level can be reduced to 2 lux at 0.5 m (20 in) from each window.		
8.6.2.2	Window Accessory Replacement/Operation without Tools	[V2 8050] System window accessories designed for routine use shall be removable and replaceable or operable from fully closed to open and vice versa by one crewmember without the use of tools.		
8.7.1	Illumination Levels	[V2 8051] The system shall provide illumination levels to support the range of expected crew tasks.		
8.7.2	Exterior Lighting	[V2 8052] The system shall provide exterior lighting to aid the crew in assembly, maintenance, navigation, rendezvous and docking, ingress and egress, EVA operations, and external task operations.		
8.7.3	Emergency Lighting	[V2 8053] The system shall provide emergency lighting for crew egress and/or operational recovery in the event of a general power failure.		
8.7.4.	Lighting Chromaticity	[V2 8059] Interior and exterior lighting intended for operational environments requiring human/camera color vision shall have a chromaticity that falls within the chromaticity gamut for white light for the Correlated Color Temperature (CCT) range of 2700 K to 6500 K as defined by ANSI C78-377, Specifications for the Chromaticity of Solid State Lighting Products.		
8.7.5	Lighting Color Accuracy	[V2 8060] Interior and exterior lighting intended for human operational environments requiring photopic vision accuracy shall have a score of 90 ± 10 on a color fidelity metric that is appropriate for the utilized lighting technology, as designated by the Color Fidelity Metric (Rf) defined by IES TM-30 methodology.		
8.7.6	Circadian Entrainment	[V2 8055] During waking hours, lighting systems shall provide the crew with retinal light exposure that is sufficient in intensity, optimal in wavelength, and implemented at the proper times and durations to entrain the human circadian pacemaker to a 24-hour day and facilitate schedule shifting.		
8.7.7	Lighting Controls	[V2 8056] Lighting systems shall have on-off controls.		
8.7.8	Lighting Adjustability	[V2 8057] Interior lights shall be adjustable (dimmable) from their maximum output level to their minimum luminance.		
8.7.9	Glare Prevention	[V2 8058] Both direct and indirect glare that causes discomfort to humans or impairs their vision shall be prevented.		
9.1.1	Crew Interface Commonality	[V2 9001] Hardware and equipment performing similar functions shall have commonality of crew interfaces.		
9.1.2	Differentiation	[V2 9002] Hardware and equipment that have the same or similar form but different functions shall be readily identifiable, distinguishable, and not be physically interchangeable.		
9.1.3	Routine Operation	[V2 9003] Interactions with and operation of systems, hardware, and equipment used during routine/nominal operations shall not consume an inordinate amount of time such that it disrupts tasks and discourages crew performance of tasks.		
9.2	Training Minimization	[V2 9004] Hardware and equipment that crew interact with shall minimize the time required for training.		
9.3.1.1	Mechanical Hazard	[V2 9005] Systems, hardware, and equipment protect the crew from moving parts that may cause injury to the crew.		
9.3.1.2	Entrapment	[V2 9006] Systems, hardware, and equipment shall protect the crew from entrapment (tangles, snags, catches, etc.).		

Downloaded from http://www.everyspec.com

9.3.1.3	Potential Energy	[V2 9007] Hardware and equipment shall not release stored potential energy in a manner that causes injury to the crew.		
9.3.1.4	Protection from Projectiles and Structural Collapse	[V2 9008] Hardware mounting and habitat enclosures shall be configured such that the crew is protected from projectiles and structural collapse in the event of sudden changes in acceleration or collisions.		
9.3.1.5	Sharp Corners and Edges - Fixed	[V2 9009] Corners and edges of fixed and handheld equipment to which the bare skin of the crew could be exposed shall be rounded as specified in Table 16, Corners and Edges.		

Table 16—Corners and Edges

Material Thickness (t)	Minimum Corner Radius	Minimum Edge Radius	Figure
t > 25 mm (t > 1 in)	13 mm (0.5 in (spherical))	3.0 mm (0.120 in)	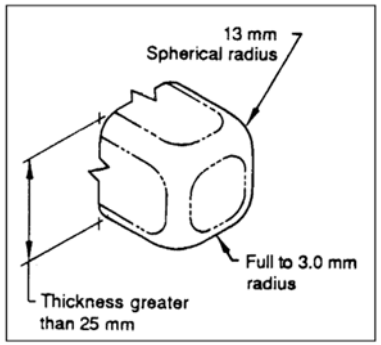
6.5 mm < t ≤ 25 mm (0.25 in < t ≤ 1 in)	13 mm (0.5 in)	3.0 mm (0.125 in)	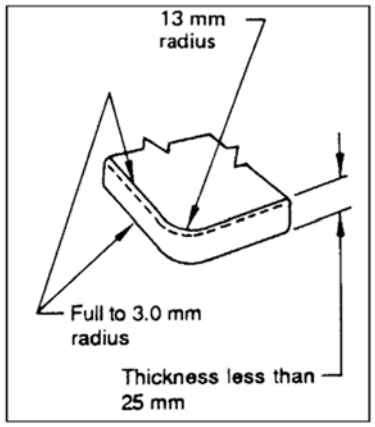

Downloaded from http://www.everyspec.com

		3.0 mm < t ≤ 6.5 mm (0.125 in < t ≤ 0.25 in)	6.5 mm (0.26 in)	1.5 mm (0.06 in)	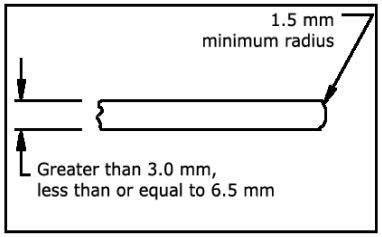		
		0.5 mm < t ≤ 3.0 mm (0.02 in < t ≤ 0.125 in)	6.5 mm (0.26 in)	Full radius	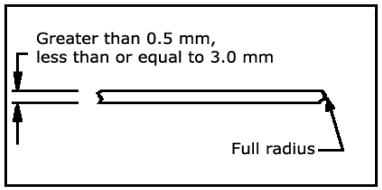		
		t < 0.5 mm (t < 0.02 in)	6.5 mm (0.26 in)	Rolled, curled, or covered to 3.0 mm (0.120 in)	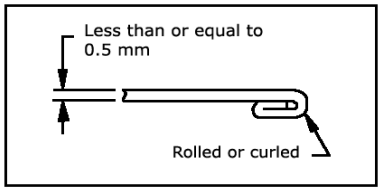		
9.3.1.6	Protection from Functionally Sharp Items	[V2 9010] Functionally sharp items shall be prevented from causing injury to the crew or damage to equipment when not in use.					
9.3.1.7	Sharp Corners and Edges - Loose	[V2 9011] Corners and edges of loose equipment to which the crew could be exposed shall be rounded to radii no less than those given in Table 17, Loose Equipment Corners and Edges.					

Table 17—Loose Equipment Corners and Edges

Equipment Mass		Minimum Edge Radius (mm (in))	Minimum Corner Radius (mm (in))
At Least (kg (lb))	Less Than (kg (lb))		
0.0 (0.0)	0.25 (0.6)	0.3 (0.01)	0.5 (0.02)
0.25 (0.6)	0.5 (1.1)	0.8 (0.03)	1.5 (0.06)
0.5 (1.1)	3.0 (6.6)	1.5 (0.06)	3.5 (0.14)
3.0 (6.6)	15.0 (33.1)	3.5 (0.14)	7.0 (0.3)
15.0 (33.1)	--	3.5 (0.14)	13.0 (0.5)

Downloaded from http://www.everyspec.com

9.3.1.8	Burrs	[V2 9012] Exposed surfaces shall be free of burrs.		
9.3.1.9	Pinch Points	[V2 9013] Pinch points shall be covered or otherwise prevented from causing injury to the crew.		
9.3.1.10	High-Temperature Exposure	[V2 9014] Any surface to which the bare skin of the crew is exposed shall not cause epidermis/dermis interface temperature to exceed the pain threshold limit of 44 °C (111.2 °F).		
9.3.1.11	Low-Temperature Exposure	[V2 9015] Any surface to which the bare skin of the crew is exposed shall not cause skin temperature to drop below the pain threshold limit of 10 ºC (50 °F).		
9.3.1.12	Equipment Handling	[V2 9016] All items designed to be carried or removed and replaced shall have a means for grasping, handling, and carrying (and, where appropriate, by a gloved hand).		
9.3.2.1	Power Interruption	[V2 9017] The system shall provide the crew with capability to control the power to an electrical circuit.		
9.3.2.2	Energized Status	[V2 9018] The system shall provide and display the de-energized status (interruption of electrical power) of a circuit to the crew and within their fields of regard.		
9.3.2.3	Nominal Physiological Electrical Current Limits	[V2 9019] Under nominal situations (routine human contacts to hardware) the program shall limit crew exposure to ≤ 0.4 mA for direct current (DC) and ≤ 0.2 mA for alternating current (AC).		
9.3.2.3.1.1	Catastrophic Physiological Electrical Current Limits for all Circumstances	[V2 9020] Any hazard analysis that determines a crew exposure to ≥ 40mA for direct current (DC) and ≥ 8 mA for alternating current (AC) shall be considered catastrophic to the human.		
9.3.2.3.1.2	Catastrophic Physiological Electrical Current Limits for Startle Reaction	[V2 9021] For unique situations where a startle reaction is deemed potentially detrimental (such as during manual control of a spacecraft or during an EVA), any hazard analysis that determines a crew exposure to > 2 mA for DC and > 0.5 mA for AC shall be considered catastrophic to the human.		
9.3.2.3.2	Body Impedance for Voltage Calculations Utilizing Electrical Current Thresholds	[V2 9022] The program shall use the 5th percentile values for the appropriate conditions (wet/dry, AC/DC, voltage level, large/small contact area) from IEC TR6049-1 to determine the appropriate body impedance to calculate the voltage associated with any current limit analysis.		
9.3.2.4	Leakage Currents – Equipment Designed for Human Contact	[V2 9023] For equipment that is specifically designed to contact the human body, electrical leakage currents caused by contact with exposed surfaces shall be kept below the levels specified in Table 18, Leakage Currents–Equipment Designed for Human Contact.		

Table 18—Leakage Currents – Equipment Designed for Human Contact

Maximum Current (mA RMS)				
Body Contact	**Frequency**	**Operating Condition**	**Equipment Type**	
			Isolated Equipment	**Non-Isolated Equipment**
External*	dc to 1 kHz	Normal	0.1	

Downloaded from http://www.everyspec.com

				Single Fault	0.5				
			>1 kHz	Normal	Lesser of (0.1 x frequency in kHz) or 5				
				Single Fault	Lesser of (0.5 x frequency in kHz) or 5				
		Internal	dc to 1 kHz	Normal	0.01	Not Allowed			
				Single Fault	0.05				
			>1 kHz	Normal	Lesser of (0.01 x frequency in kHz) or 1				
				Single Fault	Lesser of (0.05 x frequency in kHz) or 1				
		*For dc, there is a small risk of heating and tissue necrosis for prolonged duration of contact.							
9.3.3.1	Fluid/Gas Release	[V2 9024] Hardware and equipment shall not release stored fluids or gases in a manner that causes injury to the crew.							
9.3.3.2	Fluid/Gas Isolation	[V2 9025] The system shall provide for the isolation or shutoff of fluids and gases in hardware and equipment.							
9.3.3.3	Fluid/Gas Containment	[V2 9026] The system shall provide for containment and disposition of fluids and gases that might be released.							
9.4.1	Protection	[V2 9027] Systems, hardware, and equipment shall be protected from and be capable of withstanding forces imposed intentionally or unintentionally by the crew.							
9.4.2	Isolation of Crew from Spacecraft Equipment	[V2 9028] Protective provisions, e.g., close-out panels, shall be provided to isolate and separate equipment from the crew within the habitable volume.							
9.5.1	Hardware and Equipment Mounting and Installation	[V2 9029] System hardware and equipment shall be designed so that it cannot be mounted or installed improperly.							
9.5.2.1	Connector Spacing	[V2 9030] The spacing between connectors shall permit mating and demating by crewmembers wearing expected clothing.							
9.5.2.2	Connector Actuation without Tools	[V2 9031] Connectors shall be operable without tools for mating and demating.							
9.5.2.3	Incorrect Mating, Demating Prevention	[V2 9032] Cable, gas and fluid lines, and electrical umbilical connectors shall prevent potential mismating and damage associated with mating or demating tasks.							
9.5.2.4	Mating, Demating Hazards	[V2 9033] The system shall not subject personnel and equipment to hazards, including spills, electrical shocks, and the release of stored energy, during mating or demating.							

Downloaded from http://www.everyspec.com

9.6.1	Cable Management	[V2 9034] The system shall manage cable, wire, and hose location, protection, routing, and retention to prevent physical interference with crew operations and safety.		
9.6.2	Cable Identification	[V2 9035] All maintainable cables, wires, and hoses shall be uniquely identified.		
9.7.1.1	Design for Maintenance	[V2 9036] The system shall provide the means necessary for the crew to safely and efficiently perform routine service, maintenance, and anticipated unscheduled maintenance activities.		
9.7.1.2	Commercial Off-the-Shelf Equipment Maintenance	[V2 9037] Maintenance for commercial off-the-shelf equipment shall be suitable to the spaceflight environment.		
9.7.1.3	In-Flight Tool Set	[V2 9038] Each program shall establish a set of in-flight tools necessary to maintain or reconfigure the spaceflight system.		
9.7.2.1	Maintenance Time	[V2 9039] Planned maintenance for systems and associated hardware and equipment shall be capable of being performed within the allotted crew schedule.		
9.7.2.2	Minimizing Maintenance	[V2 9040] All systems and equipment shall be designed to reduce the need for maintenance.		
9.7.2.3	Equipment Modularity	[V2 9041] Where possible, equipment shall be replaceable as modular units.		
9.7.2.4	Captive Fasteners	[V2 9042] Fasteners used by the crew during maintenance shall be captive.		
9.7.2.5	Minimum Number of Fasteners - Item	[V2 9043] For items that may be serviceable by the crew, the number of fasteners used shall be the minimum required to meet structural engineering design practices.		
9.7.2.6	Minimum Variety of Fasteners - System	[V2 9044] The system shall be serviceable with a common set of fasteners that meet structural engineering design practices.		
9.7.3.1	Maintenance Item Location	[V2 9045] The system shall locate maintenance items so that the maintenance task does not require the removal or disabling of other systems or components.		
9.7.3.2	Check and Service Point Accessibility	[V2 9046] Check points and service points for systems, hardware, and equipment shall be directly accessible.		
9.7.3.3	Maintenance Accommodation	[V2 9047] Physical work access envelopes shall accommodate the crew, required tools, and any protective equipment needed to perform maintenance.		
9.7.3.4	Visual Access for Maintenance	[V2 9048] Maintenance tasks that require visual feedback shall be directly visible during task performance.		
9.7.3.5	Hand Clearance for Maintenance	[V2 9049] Clearance shall be provided for the crewmember to obtain hand access required for performing maintenance tasks, while wearing the most encumbering equipment and clothing anticipated.		
9.7.3.6	Tool Clearance	[V2 9050] The system shall provide tool clearances for tool installation and actuation for all tool interfaces during in-flight maintenance.		
9.7.4.1	Fault Detection	[V2 9051] The system shall provide rapid and positive fault detection and isolation of defective items.		
9.7.4.2	Failure Notification	[V2 9052] The system shall alert the crew when critical equipment has failed or is not operating within tolerance limits.		
9.8.1.1.1	Protective Equipment	[V2 9053] Protective equipment shall be provided to protect the crew from expected hazards.		

Downloaded from http://www.everyspec.com

9.8.1.1.2	Protective Equipment Use	[V2 9054] Protective equipment shall not interfere with the crew's ability to conduct the nominal or contingency operations that the crew is expected to perform while employing the protective equipment, including communication among crewmembers and with ground personnel.		
9.8.1.1.3	Protective Equipment Automation	[V2 9055] Automation of protective equipment shall be provided when the crew cannot perform assigned tasks.		
9.8.1.2.1	Use of Hearing Protection	[V2 9056] The system shall meet SPL limits of section 6.6.2, Acoustic Limits, in this NASA Technical Standard, except where otherwise specified in this NASA Technical Standard, without requiring the use of personal hearing protection.		
9.8.1.2.2	Hearing Protection Provision	[V2 9057] Appropriate personal hearing protection shall be provided to the crew during all mission phases for contingency or personal preference.		
9.8.1.2.3	Hearing Protection Interference	[V2 9058] The system shall be designed so that hearing protection does not inhibit voice communication, monitoring of systems, and detection of alerts.		
9.8.2.1	Fire Detecting, Warning, and Extinguishing	[V2 9059] A fire protection system comprised of detecting, warning, and extinguishing devices shall be provided to all spacecraft volumes during all mission phases without creating a hazardous environment.		
9.8.2.2	Fire Protection System Health and Status	[V2 9060] The fire protection system health and status data shall be provided to the crew and other mission systems.		
9.8.2.3	Fire Protection System Failure Alerting	[V2 9061] The crew shall be alerted to failures of the fire protection system.		
9.8.2.4	Fire Protection System Activation	[V2 9062] The fire protection system shall be capable of being manually activated and deactivated.		
9.8.2.5	Portable Fire Extinguishers	[V2 9063] A fire protection system shall include manually operated portable fire extinguishers.		
9.8.3	Emergency Equipment Accessibility	[V2 9064] Emergency equipment shall be clearly identified, accessible, and useable to complete emergency response in the time required.		
10.1.1.1	Usability Acceptance Criteria	[V2 10001] Each program shall define usability acceptance criteria for crew interfaces.		
10.1.1.2	Crew Interface Effectiveness	[V2 10002] The system shall provide crew interfaces that enable the crew to perform their tasks effectively, e.g., within acceptable error limits and scheduled operating times.		
10.1.1.3	Crew Interface Efficiency	[V2 10003] The system shall provide crew interfaces that are efficient, e.g., with reduced training time, task time, and frustration.		
10.1.2.1	Controllability and Maneuverability	[V2 10004] The spacecraft shall exhibit Level 1 handling qualities (Handling Qualities Rating (HQR) 1, 2 and 3), as defined by the Cooper-Harper Rating Scale, during manual control of the spacecraft's flight path and attitude when manual control is the primary control mode or automated control is non-operational.		
10.1.3.1	Crew Interfaces Standardization	[V2 10005] Crew interfaces shall be standardized throughout a system.		

Downloaded from http://www.everyspec.com

10.1.3.2	Operations Nomenclature Standardization	[V2 10006] Operational nomenclature shall be standardized throughout a system.		
10.1.3.3	Display Standards, Labelling Plan, and Icon Library	[V2 10007] Each program shall establish display standards, a labelling plan, and an icon library.		
10.1.3.4	Units of Measure	[V2 10008] Units of measure shall be consistent across like items.		
10.1.3.5	Crew Interface Operations Standardization	[V2 10009] Methods of operating crew interfaces shall be standardized within and across system elements..		
10.1.3.6	Consistent Displays and Controls	[V2 10010] Crew interfaces shall use consistent control and display layout within and across system elements.		
10.1.3.7	Displays and Controls Commonality	[V2 10011] Display and control interfaces performing similar functions shall have commonality.		
10.1.3.8	Consistent Procedures	[V2 10012] Procedures for performing similar tasks shall be consistent.		
10.1.4.1	Display and Control Distinctions	[V2 10013] Display and control actions that result in different outcomes shall be distinguishable to preclude unintended results.		
10.1.4.2	Syntax Distinction	[V2 10014] The syntax of any two commands that result in different outcomes shall be distinguishable to preclude issuing of the unintended command.		
10.1.5.1	Use of Cues	[V2 10015] Crew interfaces shall use cognitive aids to reduce the demand on crewmember memory to allow the crew to accomplish their tasks within the required performance parameters.		
10.1.5.2	Cue Saliency	[V2 10016] Cues shall be used such that the saliency of the cue is consistent with the importance of the message to be conveyed and urgency of response.		
10.1.6.1	System Health and Status	[V2 10017] The system shall provide system health and status information to the crew, either automatically or by request.		
10.1.6.2	System Messages	[V2 10018] System messages shall be specific and informative.		
10.1.6.3	Display Update	[V2 10019] Data shall be updated for display within 1.0 second of the crew-commanded state change.		
10.1.6.4	Missing Data Display	[V2 10020] When the display of a data parameter cannot be completed because it is missing or unavailable, the system shall provide feedback to the crew within the time specified in Table 21, Maximum System Response Time(s).		

Table 19 —Maximum System Response Time(s)

System Response	System Response Time (s)
Indication of a discrete input, e.g., keystroke	0.1
Display of information on crew request	1.0
Local update of crew selection, e.g., menu	0.5

Downloaded from http://www.everyspec.com

			Display of updated data on crew command of state change	1.0		
			Feedback that the crew's command is in progress, completed, or cannot be completed	2.0		
10.1.6.5	Control Feedback	[V2 10021] The system shall provide a positive indication of crew-initiated control activation.				
10.1.6.6	System Feedback	[V2 10022] The system shall provide feedback to the crew in accordance with the system response times in Table 21.				
10.1.7.1	Current Procedure Step	[V2 10023] The system shall indicate to the crew which step in the electronically displayed procedure is currently being executed.				
10.1.7.2	Completed Procedure Steps	[V2 10024] The system shall indicate to the crew which steps in the electronically displayed procedure have been completed.				
10.1.7.3	View of Procedure Steps	[V2 10025] The system shall provide a method for viewing prior and future steps in the electronically displayed procedure.				
10.1.7.4	Procedure Flexibility	[V2 10026] The system shall provide a method for the crew to make real-time insertion, deletion, and rearrangement of electronic procedures.				
10.1.8.1	Inadvertent Operation Prevention	[V2 10027] Control systems shall be designed to prevent inadvertent operation.				
10.1.8.2	Inadvertent Operation Recovery	[V2 10028] Control systems shall allow for recovery from inadvertent operation and accidental changes in system status.				
10.2.1.1	Display and Control Location and Design	[V2 10030] Displays and controls shall be designed and located so that they are operable to the required degree of accuracy in expected operating positions and conditions.				
10.2.1.2	High Priority Displays and Controls	[V2 10031] Emergency, critical, important, and most frequently used displays and controls shall be located in the most prominent crew viewing and operating zones.				
10.2.2	Display and Control Grouping	[V2 10032] Displays and controls shall be grouped according to purpose or function.				
10.2.3.1	Display-Control Relationships	[V2 10033] All display-control relationships shall be logical and explicit.				
10.2.3.2	Display and Control Movement Compatibility	[V2 10034] Displays shall be compatible with control movement, e.g., control motion to the right is compatible with clockwise roll, right turn, and direct movement to the right.				
10.2.3.3	Display and Control Sequence of Use	[V2 10035] Displays and controls shall be arranged in relation to one another according to their sequence of use.				
10.3.1.1	Display Identifying Features	[V2 10036] Displays shall have identifying features (such as location, size, shape, and color) that allow the crew to correctly navigate, locate, and identify the display in a timely manner.				
10.3.1.2	Display Area	[V2 10037] The system shall provide the display area to present all critical task information within a crewmember's field of regard.				
10.3.2.1	Display Interpretation	[V2 10038] Displays shall be accurately interpretable within the time required to meet mission needs.				
10.3.2.2	Display Readability	[V2 10039] Displays shall be readable by the crew from the crew’s operating locations and orientation.				

Downloaded from http://www.everyspec.com

10.3.2.3	Display Information	[V2 10040] Information displayed shall contain only what is needed for the crew to maintain SA, diagnose, make decisions, plan responses, and perform the required tasks.		
10.3.2.4	Display Information Flow	[V2 10042] Information displayed shall be grouped, arranged, and located to support task flow.		
10.3.2.5	Display Navigation	[V2 10043] Display navigation shall allow the crew to move within and among displays without loss of SA and in a timely manner.		
10.3.2.6	Display Nomenclature	[V2 10044] The nomenclature for each item or process shall be self-explanatory and direct the crew to the function or usage of the item.		
10.3.2.7	Display Coding Redundancy	[V2 10045] For critical information and critical tasks when color is used to convey meaning, the system shall provide an additional cue		
10.3.2.8	Measurement Units	[V2 10046] Units of measure shall be displayed with their corresponding values.		
10.3.3.1	Visual Display Legibility	[V2 10047] Displays shall be legible in the viewing conditions expected during task performance.		
10.3.3.2	Visual Display Parameters	[V2 10048] Displays shall meet the visual display requirements in Table 20, Visual Display Parameters.		

Table 20—Visual Display Parameters

Metric	Minimum	Maximum	Context	Notes
Peak white luminance	25 cd/m^2	--	Emissive displays	≥100 cd/m^2 preferred
Ambient contrast ratio	10	--		Includes ambient illumination
Color gamut area	0.17	--	Color displays	Fraction of CIE 1976 u'v' chromaticity space
Viewing angle	-45 deg	+45 deg		Four point viewing angle (left, right, up, down), contrast and color gamut criteria met
Spatial resolution	32 pixels/deg	--	Image and video displays	
Frame rate	60 Hz	--	Video displays	
Moving edge blur	--	15 ms		Using metric GET (preferable) or BET; use average of five equal lightness levels, including white and black
Number of colors	2^{24} (1,627,716)	--	Image and video displays	

Downloaded from http://www.everyspec.com

			2^{12} (4,096)	--	Text and graphics displays			
		Number of gray levels	2^{8} (256)	--	B/W image and video displays			
		Note: Except where noted, metrics are as defined as in International Committee on Display Metrology (ICDM), Display Measurement Standard (DMS 1.0), or Video Electronics Standards Association (VESA) Flat Panel Display Measurements (FPDM 2.0). Further details on metrics may be found in chapter 10, Crew Interfaces, of the HIDH.						
10.3.3.3	Visual Display Character Parameters	[V2 10049] Displays shall meet the visual display character requirements in Table 21, Visual Display Character Parameters.						

Table 21—Visual Display Character Parameters

Metric	Minimum	Notes
Character contrast	0.2 (Weber Contrast)	Includes ambient illumination
Character height	0.25 deg	≥0.4 deg preferred. (0.25 deg is 10-point type at 32 in)

10.3.3.4	Display Font	[V2 10050] Font size and type shall be selected to ensure acquisition, readability, and interpretability of visual displays.		
10.3.4.1.1	Intelligibility of Electronically Stored Speech Messages	[V2 10052] Electronically stored speech messages from audio displays shall have 100% intelligibility and discriminability between the ensemble of different messages the audio display is programmed to produce (as measured under realistic background noise conditions and at locations where the display will be used).		
10.3.4.1.2	Sound Pressure Level	[V2 10053] The system shall provide SPLs above background noise and compliant with acoustic limits to ensure audio display usability.		
10.3.4.1.3	Sound Distortion Level	[V2 10054] The system shall provide audio signals with a minimal level of distortion and an appropriate frequency range to ensure usability of the audio display.		
10.3.4.1.4	Distinguishable and Consistent Alarms	[V2 10055] The system shall provide distinguishable and consistent alarms to ensure audio display usability.		
10.3.4.2.1	Audio Display Sound Level	[V2 10056] Alarms shall produce auditory annunciations with an SPL that meets at least one of the following criteria: a. Using measurements of A-weighted sound levels (ISO 7731:2003(E), Ergonomics – danger signals for public and work areas – Auditory danger signals, method a in section 5.2.2.1), the difference between the two A-weighted SPLs of the signal and the ambient noise is greater than 15 dBA (LS,A to LN,A > 15 dBA).		

Downloaded from http://www.everyspec.com

		b. Using measurements of octave band SPLs (ISO 7731:2003(E), method b in section 5.2.3.1), the SPL of the signal in one or more octave bands is greater than the effective masked threshold by at least 10 dB in the frequency range from 250 Hz to 4,000 Hz (LSi,oct to Lti,oct > 10 dB). c. Using measurements of 1/3 octave band SPLs (ISO 7731:2003(E), method c in section 5.2.3.2), the SPL of the signal in one or more 1/3 octave bands is greater than the effective masked threshold by 13 dB in the frequency range from 250 Hz to 4,000 Hz (LSi,1/3oct to LTi,1/3oct > 13 dB).		
10.3.4.2.2	Reverberation Time	[V2 10057] The system shall provide a reverberation time of less than 0.6 seconds within the 500-Hz, 1-kHz, and 2-kHz octave bands.		
10.3.4.2.3	Frequency	[V2 10058] Frequency content of auditory alarms shall correspond to maximal human sensitivity (200 Hz to 4 kHz).		
10.3.4.2.4	Auditory Alarms for Sleeping Crewmembers	[V2 10059] If the alarm signal is intended to arouse sleeping crewmembers, the requirement in section 10.3.4.2.1, Audio Display Sound Level [V2 10056], in this NASA Technical Standard shall be increased by an additional 5-dB signal-to-noise ratio at the sleep head-location with all sleep station doors closed.		
10.3.5.1	Label Provision	[V2 10060] Labels shall be provided, as necessary, for the crew to identify items, interpret and follow nominal and contingency procedures, and avoid hazards.		
10.3.5.2	Label Standardization	[V2 10061] Labels shall be consistent and standardized throughout the system.		
10.3.5.3	Label Display Requirements	[V2 10062] Labels shall meet the requirements of visual displays (section 10.3.3, Visual Display Devices, in this NASA Technical Standard), except font height (section10.3.5.7, Label Font Height [V2 10066], in this NASA Technical Standard).		
10.3.5.4	Label Location	[V2 10063] Labels shall be positioned on or directly adjacent to the item they are labeling.		
10.3.5.5	Label Categories	[V2 10064] Labels shall be categorized by type, e.g., safety, procedure, and identification, with each label type having standardized, visually distinct characteristics.		
10.3.5.6	Label Distinction	[V2 10065] Labels shall be easily recognizable and distinguishable from other labels.		
10.3.5.7	Label Font Height	[V2 10066] Font height of 0.4 degrees or greater shall be used on labels.		
10.4.1	Control Shape	[V2 10067] The shape of a control shall not interfere with ease of control manipulation.		
10.4.2.1	Control Identification	[V2 10068] Controls that are intended for out-of-view operation shall be spatially or tactually distinct from one another.		
10.4.2.2	Emergency Control Coding	[V2 10069] The system shall provide coding for emergency controls that are distinguishable from non-emergency controls.		
10.4.3.1	Control Size and Spacing	[V2 10070] The size and spacing of controls shall be optimized for operation by the expected body part, e.g., finger, hand, foot, and expected clothing.		
10.4.3.2	Control Arrangement and Location	[V2 10071] The arrangement and location of functionally similar or identical controls shall be consistent throughout the system.		
10.4.3.3	Control Proximity	[V2 10072] Controls used by a restrained or unrestrained crewmember shall be located within the functional reach zones of the crew.		
10.4.3.4	Control Operation during Accelerations	[V2 10073] The system shall provide body or limb supports and restraints that enable accurate crew control of applicable interfaces and prevent inadvertent control inputs during expected microgravity, acceleration, and vibration conditions.		

Downloaded from http://www.everyspec.com

10.4.4.1	Control Operating Characteristics	[V2 10074] Controls shall have operating characteristics, e.g., control type, forces, response rate, response latency, tactile feedback, to allow the crew to make the controlled item respond with the required levels of accuracy, precision, and speed.		
10.4.4.2	Control Input-Response Compatibility	[V2 10075] Controls shall be compatible with the resulting system response.		
10.4.4.3	Control Latency	[V2 10076] The system shall provide controls such that the crew is unimpeded by the time lag between the operation of a control and the associated change in system state.		
10.4.4.4	Control Resistive Force	[V2 10077] Control resistive force shall prevent unintended drifting or changing of position.		
10.4.4.5	Detent Controls	[V2 10078] Detent controls shall be provided when control movements occur in discrete steps.		
10.4.4.6	Stops Controls	[V2 10079] Stops shall be provided at the beginning and end of a range of control positions, if the control is not required to be operated beyond the end positions or specified limits.		
10.4.5.1	Command Confirmation	[V2 10080] Crew confirmation shall be required before completing critical, hazardous, or destructive commands.		
10.4.6.1	Suited Control Operations	[V2 10081] Controls to be used by suited crewmembers shall be operable by a suited crewmember.		
10.4.6.2	Suited Control Spacing	[V2 10082] Controls to be used by suited crewmembers shall be spaced such that they can be operated by a suited crewmember without inadvertent operation of adjacent controls.		
10.5.1	Communication System Design	[V2 10083] Communication systems shall be designed to support coordinated and collaborative distributed teamwork.		
10.5.2	Communication Capability	[V2 10084] The system shall provide the capability to send and receive communication among crewmembers, spacecraft systems, and ground systems to support crew performance, behavioral health, and safety.		
10.5.3.1	Communication Speech Levels	[V2 10085] Audio communication systems shall allow crew to communicate with one another and with the ground at normal speech levels and with expected background SPLs.		
10.5.3.2	Communication Operational Parameters	[V2 10086] To ensure intelligibility, audio communications shall address system operational parameters, including frequency, dynamic range, noise canceling and shields, pre-emphasis, and peak clipping.		
10.5.3.3	Communication Environmental Parameters	[V2 10087] To ensure intelligibility, audio communications shall address appropriate background sound levels and architectural acoustical characteristics for both transmitter and receiver area.		
10.5.3.4	Communication Controls and Procedures	[V2 10088] To ensure intelligibility, audio communications shall address operating controls and procedures, including volume, squelch, natural language, acknowledgement feedback, and muting.		
10.5.3.5	Communication Transmitter and Receiver Configuration	[V2 10089] To ensure intelligibility, audio communications shall address transmitter and receiver configuration, e.g., headsets, microphones, air conduction, and bone conduction.		

Downloaded from http://www.everyspec.com

10.5.3.6	Audio Communications Quality	[V2 10090] Audio communication speech quality shall ensure that auditory speech communications do not impact crew performance.		
10.5.3.7	Speech Intelligibility	[V2 10091] For critical communications, the system shall ensure 90% English word recognition, using ANSI/ASA S3.2-2009, Method for Measuring the Intelligibility of Speech over Communication Systems.		
10.5.3.8	Private Audio Communication	[V2 10093] The system shall provide the capability for private audio communication with the ground.		
10.5.4.1	Video Communications Visual Quality	[V2 10094] Video communications shall employ digital encoding or alternate coding of equivalent visual quality.		
10.5.4.2	Video Communications Spatial Resolution	[V2 10095] Video communications shall provide sufficient spatial resolution (width and height in pixels) to accomplish relevant tasks.		
10.5.4.3	Video Communications Temporal Resolution	[V2 10096] Video communications shall provide sufficient temporal resolution (frames/s) to accomplish relevant tasks.		
10.5.4.4	Video Communications Color and Intensity	[V2 10097] Video communications shall provide sufficient color and intensity levels to accomplish relevant tasks.		
10.5.4.5	Video Communications Bit Rate	[V2 10098] Video communications systems shall support bit rates high enough to ensure that compression artifacts are as low as reasonably achievable.		
10.5.4.6	Audio-Visual Lag Time	[V2 10099] Communications systems that carry sound and video that are intended to be synchronized shall ensure that the sound program does not lead the video program by more than 15 ms or lag the video program by more than 45 ms.		
10.6.1.1	Automated and Robotic System Provision	[V2 10100] Automated or robotic systems shall be provided when crew cannot reliably, safely, or efficiently perform assigned tasks.		
10.6.1.2	Automated and Robotic System Design	[V2 10101] Automated and robotic systems shall include safeguards to prevent mission degradation, equipment damage, or injury to crew.		
10.6.1.3	Robotic Control Stations - Common and Consistent	[V2 10102] For a given robotic system, operator control stations shall be common and consistent, independent of physical location, e.g., on Earth, in space, on the lunar surface, or on a planetary surface.		
10.6.1.4	Automated and Robotic System Situational Awareness	[V2 10103] Operator control stations for automated or robotic systems shall provide the displays and interfaces needed for SA to perform tasks and manage the system.		
10.6.1.5	Automation Levels	[V2 10104] The crew interfaces to automated and robotic systems shall support the appropriate level(s) of automation to accomplish the task effectively.		

Downloaded from http://www.everyspec.com

10.6.1.6	Automation Level Status Indication	[V2 10105] Operators of automated and robotic systems shall be provided with information on the status of the automation, including when the system changes between levels of automation.		
10.6.1.7	Robotic System Status	[V2 10106] Robotic assets shall interact with the operating crew in accordance with section 10.1.6, System Interaction, in this NASA Technical Standard such that the operator can determine the asset health, status, and place in a procedural sequence and the ability of the robotic asset to comprehend and accept operator commands.		
10.6.1.8	Robotic System Arbitration	[V2 10107] Robotic systems designed to have multiple operators shall be able to accept the input from and arbitrate between multiple operators so as to perform safely and without degradation.		
10.6.1.9	Automated and Robotic System Operation – with Communication Limitations	[V2 10108] Automated and robotic systems shall be capable of receiving and sending commands and performing tasks in the presence of a communication latency and intermittent transmission related to remote operations.		
10.6.1.10	Automation and Robotics Shut-Down Capabilities	[V2 10109] The crew shall be provided the ability to shut down automated and robotic systems.		
10.6.1.11	Automation and Robotics Override Capabilities	[V2 10110] The crew shall be provided the ability to override automated and robotic systems.		
10.6.1.12	Crew Interfaces to Robotic Systems - Spatial Disorientation	[V2 10111] Crew interfaces to robotic systems shall account for different frames of reference between the operator and the robot to minimize spatial disorientation and allow the crew to accomplish their tasks within the required performance parameters.		
10.6.1.13	Crew Interfaces to Robotic Systems - Frames of Reference	[V2 10112] Crew interfaces to robotic systems shall be designed to enable effective and efficient coordination of or shifting between multiple frames of reference.		
10.7.1	Information Management Capabilities – Provision	[V2 10113] The information management system shall provide data critical to mission planning, mission operations, system maintenance, and system health and status at an appropriate level of detail to support effective and efficient crew performance.		
10.7.2.1	Visual and Audio Annunciations	[V2 10114] The information management system shall provide visual and audio annunciations to the crew for emergency, warning, and caution events.		
10.7.2.2	Set-Point Alerts	[V2 10115] The system shall alert the crew if the selected set-points are outside safe limits.		
10.7.2.3	Audio Annunciation Silencing	[V2 10116] The information management system shall provide a manual silencing feature for active audio annunciations.		
10.7.2.4	Visual and Auditory Annunciation Failures	[V2 10117] The information management system shall test for a failure of the visual and auditory annunciators upon crew request.		
10.7.2.5	Visual Alerts – Red	[V2 10118] The color red shall be used as a visual indicator for the highest alert level.		
10.7.2.6	Visual Alerts – Yellow	[V2 10119] The color yellow shall be used as a visual indicator for the second highest alert level.		

Downloaded from http://www.everyspec.com

10.7.3.1	Information Management Methods and Tools	[V2 10120] The information management system shall provide methods and tools that allow the crew to effectively input, store, receive, display, process, distribute, update, and dispose of mission data.		
10.7.3.2	Information Management Standard Nomenclature	[V2 10121] The information management system shall use standard nomenclature.		
10.7.3.3	Information Management Compatibility	[V2 10122] The information management system shall be compatible with other systems within the spacecraft.		
10.7.3.4	Information Management Operation Rate	[V2 10123] The information management system shall operate at a rate that enables the crew to perform tasks effectively and efficiently, e.g., within acceptable error limits and scheduled operating times.		
10.7.3.5	Information Management Data Provision	[V2 10124] The information management system shall provide the crew with data to perform tasks at each workstation where those tasks are to be performed.		
10.7.3.6	Information Management Security	[V2 10125] The information management system shall have features for the protection of sensitive and private data, transmission, secure viewing, and sender verification.		
10.7.3.7	Information Management Ground Access	[V2 10126] The information management system shall allow for ground access to perform all onboard database functions without crew intervention.		
10.7.3.8	Information Capture and Transfer	[V2 10127] The information management system shall provide a capability for the crew to capture and transfer information in a portable fashion.		
10.7.3.9	Information Annotation	[V2 10128] The information management system shall provide a capability for annotation by the crew.		
10.7.3.10	Information Backup and Restoration	[V2 10129] The information management system shall provide for crew-initiated data backup and restoration for all mission data and automatic backup for critical data.		
10.7.3.11	Alternative Information Sources	[V2 10130] The information management system shall provide alternative information sources for use in the event of the loss of the information management system.		
10.7.3.12	Software System Recovery	[V2 10131] The information management system shall be rapidly recoverable from a software system crash.		
11.1.1	Suited Donning and Doffing	[V2 11001] The system shall accommodate efficient and effective donning and doffing of spacesuits for both nominal and contingency operations.		
11.1.2.1	Suit Pressure Set-Points	[V2 11006] The suit shall provide the capability for the crew to select discrete suit pressure set-points within the suit operating pressure ranges during pressurized and unpressurized suited operations.		
11.1.2.2	Suit Equilibrium Pressure	[V2 11007] Suits shall maintain pressure within 1.72 kPa (0.25 psi) after the suit has achieved an equilibrium pressure for a set-point.		
11.1.2.3	Continuous Noise in Spacesuits	[V2 11009] Suits shall limit suit-induced continuous noise exposure at the ear to NC-50 or below without the use of auxillary hearing protection.		

Downloaded from http://www.everyspec.com

11.1.2.4	EVA Suit Radiation Monitoring	[V2 11010] The suit shall provide or accommodate radiation monitoring and alerting functions to allow the crew to take appropriate actions.		
11.1.2.5	Suited Crewmember Heat Storage	[V2 11011] The system shall prevent the energy stored by each crewmember during nominal suited operations from exceeding the limits defined by the range 3.0 kJ/kg (1.3 Btu/lb) > ΔQ stored > -1.9 kJ/kg (-0.8 Btu/lb), where ΔQ stored is calculated using the 41 Node Man or Wissler model.		
11.1.3.1	Suited Body Waste Management – Provision	[V2 11013] Suits shall provide for management of urine, feces, menses, and vomitus of suited crewmembers.		
11.1.3.2	EVA Suit Urine Collection	[V2 11028] EVA suits shall be capable of collecting a total urine volume of Vu=0.5 +2.24t/24 L, where t is suited duration in hours.		
11.1.33	LEA Suit Urine Collection	[V2 11014] LEA suits shall be capable of collecting a total urine volume of Vu=0.5 + 2t/24 L throughout suited operations, where t is suited duration in hours.		
11.1.3.4	Suit Urine Collection per Day - Contingency	[V2 11015] For contingency suited operations lasting longer than 24 hours, suits shall be capable of collecting and containing 1 L (33.8 oz) of urine per crewmember per day.		
11.1.3.5	Suit Feces Collection per Day – Contingency	[V2 11016] During contingency suited operations, suits shall be capable of collecting 75 g (0.15 lb) (by mass) and 75 ml (2.5 oz) (by volume) of fecal matter per crewmember per day.		
11.1.3.6	Suit Isolation of Vomitus	[V2 11017] Suits shall provide a means for the isolation of vomitus from the crewmember's face.		
11.1.4.1	Suited Field of Regard	[V2 11018] Suits shall provide a field of regard sufficient to allow the crewmember to accomplish required suited tasks.		
11.1.4.2	Suit Helmet Optical Quality	[V2 11019] Suit helmets shall have sufficient optical qualities to allow the crewmember to accomplish required suited tasks.		
11.1.4.3	Suit Helmet Luminance Shielding	[V2 11020] Suit helmets shall provide protection to suited crewmembers from viewing objects with luminance that could prevent successful completion of required suited tasks.		
11.1.4.4	Suit Helmet Visual Distortions	[V2 11021] Suit helmets shall be free from visual distortion.		
11.1.5	Suit Helmet Displays	[V2 11022] Suit helmet field of regard shall be unencumbered if helmet- or head-mounted displays are provided.		
11.1.6	Suit Information Management	[V2 11023] The system shall allow the crew to effectively input, store, receive, display, process, distribute, update, and dispose of relevant information on consumable levels, suit status and alerts, and biomedical data.		
11.2.1.1	Ability to Work in Suits	[V2 11024] Suits shall provide mobility, dexterity, and tactility to enable the crewmember to accomplish suited tasks within acceptable physical workload and fatigue limits while minimizing the risk of injury.		
11.2.2.1	Suited Nutrition	[V2 11025] The system shall provide a means for crew nutrition in pressure suits designed for surface (e.g., moon or Mars) EVAs of more than 4 hours in duration or any suited activities greater than 12 hours in duration.		
11.2.3.1	LEA Suited Hydration	[V2 11029] The system shall provide a means for on-demand crew hydration while suited, including a minimum quantity of potable water of 2 L per 24 hours for the LEA suit.		

Downloaded from http://www.everyspec.com

11.2.3.2	EVA Suited Hydration	[V2 11030] The system shall provide a means for on-demand crew hydration while suited, including a minimum quantity of potable water of 240 ml (8 oz) per hour for EVA suited operations.		
11.2.4.1	Suited Medication Administration	[V2 11027] The system shall provide a means for administration of medication to a suited, pressurized crewmember for pressurized suited exposures greater than 12 hours.		
11.2.5.1	Suited Relative Humidity	[V2 11031] For suited operations, the system shall limit RH to the levels in Table 22, Average Relative Humidity Exposure Limits for Suited Operations. **Table 22 — Average Relative Humidity Exposure Limits for Suited Operations** **Average RH** / **Time Allowed** RH ≤ 5% / 1 hr 5% < RH ≤ 15% / 2 hr 15% < RH ≤ 25% / 8 hr 25% < RH ≤ 75% (nominal range[1]) / Indefinite[2] 1. Nominal humidity range is included for completeness. 2. Assumes temperature is within nominal range in accordance with section 6.2.4.2, Temperature Range [V 6013], in this NASA Technical Standard.		
11.3	LEA Suited Decompression Sickness Prevention Capability	[V2 11032] LEA spacesuits shall be capable of a minimum of 40 kPa (5.8 psia) operating pressure to protect against Type II decompression sickness in the event of a cabin depressurization.		
11.4	Suited Atmospheric Control	[V2 11033] The suit shall allow the suited crewmembers and remote operators to adjust the suit thermal control system.		
11.5	Suited Atmospheric Data Recording	[V2 11034] Systems shall automatically record suit pressure, ppO_2, and $ppCO_2$.		
11.6	Suited Atmospheric Data Displaying	[V2 11035] Suits shall display suit pressure, ppO_2, and $ppCO_2$ data to the suited crew.		
11.7	Suited Atmospheric Monitoring and Alerting	[V2 11036] Suits shall monitor suit pressure, ppO_2, and $ppCO_2$ and alert the crew when they are outside safe limits.		
11.8	Suited Metabolic Rate Measurement	[V2 11037] The system shall measure or calculate metabolic rates of suited EVA crewmembers.		
11.9	Suited Metabolic Rate Display	[V2 11038] The system shall display metabolic data of suited EVA crewmembers to the crew.		
11.10	Nominal EVA Spacesuit Carbon Dioxide Levels	[V2 11039] The EVA spacesuit shall limit the inspired CO_2 partial pressure (P_ICO_2) in accordance with Table 23, EVA Spacesuit Inspired Partial Pressure of CO_2 (P_ICO_2) Limits..		

Downloaded from http://www.everyspec.com

Table 23—EVA Spacesuit Inspired Partial Pressure of CO_2 (P_ICO_2) Limits †

P_ICO_2 (mmHg)	Allowable Cumulative Duration (hours per day)
$P_ICO_2 > 15.0$	Do Not Exceed
$12.5 < P_ICO_2 \leq 15.0$	≤ 0.5
$10.0 < P_ICO_2 \leq 12.5$	≤ 1.0
$7.0 < P_ICO_2 \leq 10.0$	≤ 2.5
$4.0 < P_ICO_2 \leq 7.0$	≤ 7.0
$P_ICO_2 \leq 4.0$	≤ 14.0

12.1 Ground Processing and Operations

The requirements listed in Section 12.1 apply only to the design and development of flight systems interfaced by ground support personnel at integration, launch, landing, and recovery sites. These requirements are optional for designs at manufacturing and development sites.

12.1.1	System Assumptions	[V2 12003] Each human spaceflight program **shall** document the system support design and environment: a. Work environment (e.g., lighting, heating, atmosphere, gravity). b. Tools and support equipment. c. Ground support personnel characteristics (e.g., size, training, experience, number, physical and cognitive capabilities, skills).		
12.1.2.1	Anthropometry, Biomechanics, Range of Motion, and Strength	[V2 12004] Each program **shall** identify an anthropometry, biomechanics, range of motion, and strength data set for the ground support population to be accommodated in support of all requirements in this section of this NASA Technical Standard.		
12.1.2.2	Protective Equipment	[V2 12005] The system **shall** accommodate ground personnel protective equipment and attire.		
12.1.2.3	Volume Accommodation	[V2 12006] The system **shall** provide the volume necessary for the ground support personnel to perform all ground processing tasks using the required tools and equipment.		
12.1.2.4	Ground Processing – Induced Forces	[V2 12007] Systems, hardware, and equipment **shall** be protected from or be capable of withstanding forces imposed by the ground support personnel or GSE, in a 1 G environment.		
12.1.2.5	Systems Accessibility	[V2 12008] System components, hardware, and/or equipment that requires ground support personnel inspection or interaction **shall** be accessible.		
12.1.2.6	Tool Clearance	[V2 12009] The system **shall** provide tool clearances for tool installation and actuation for all tool interfaces during ground processing.		
12.1.3.1	Flight Hardware Differentiation	[V2 12010] Flight system components that have the same or similar form but different functions **shall** be readily identifiable, distinguishable, and not be physically interchangeable.		

Downloaded from http://www.everyspec.com

12.1.3.2	Hardware Protection	[V2 12011] The system **shall** provide a means of protecting flight hardware and equipment from damage during ground processing.		
12.1.3.3	Mobility Aids	[V2 12012] The system **shall** provide mobility aids to support expected ground support personnel tasks.		
12.1.3.4	Equipment Handling Design	[V2 12013] All items designed to be carried, supported, or removed and replaced **shall** have a means for grasping, handling, and carrying.		
12.1.3.5	Inadvertent Operation Prevention	[V2 12014] The system **shall** be designed to prevent inadvertent operation of controls during ground processing.		
12.1.3.6	Incorrect Installation Prevention	[V2 12015] System hardware and equipment **shall** be designed to prevent incorrect mounting or installation.		
12.1.3.7	Pre-Defined Tool Set	[V2 12016] The system **shall** be designed to be assembled, prepared for launch, maintained, and reconfigured using a pre-defined set of standard tools and lesser set of any pre-established set of specialized tools.		
12.1.3.8	Captive Fasteners	[V2 12017] Fasteners on installable units **shall** be captive.		
12.1.3.9	Ground Processing Without Damage	[V2 12018] The system **shall** be designed for assembly, testing and checkout, troubleshooting, and maintenance that prevents damage to other components.		
12.1.3.10	Replacable Items	[V2 12019] The system **shall** locate maintenance items so that a planned ground processing (e.g., corrective or preventive maintenance) task does not require the deintegration or demating of other systems or components.		
12.1.3.11	Visual Access for Ground Processing	[V2 12020] The system **shall** provide direct line-of-sight visual access to all flight system components requiring inspections or other human-system interactions, except self-mating connectors, on which ground processing is performed by ground personnel.		
12.1.3.12	Lighting	[V2 12021] The system **shall** provide lighting to perform ground processing tasks in the vehicle.		
12.1.3.13	Supplemental Systems	[V2 12022] The system **shall** be designed to support any supplemental systems that are required to assist ground support personnel when an assigned task cannot reliably, safely, or effectively be performed by ground support personnel alone.		
12.1.3.14	Operational Consistency	[V2 12023] The system **shall** be designed for consistent operation across ground processing tasks.		
12.1.3.15	Restraints and Platforms	[V2 12024] The system **shall** accommodate restraint and platform placement that ensures the optimum reach and work envelope of the suited or unsuited ground support personnel for the required tasks.		
12.1.3.16	System Feedback	[V2 12025] The system **shall** provide feedback to the operator indicating successful task completion.		
12.1.3.17	Stowage Access	[V2 12026] The system **shall** provide access for ground support personnel to spacecraft stowage volumes that require late loading and early unloading of items.		
12.1.3.18	Flight Software Systems	[V2 12027] The system **shall** allow the ground support personnel safe operation of flight software systems for ground processing.		
12.1.4.1	Sharp Edge and Burr Injury Prevention	[V2 12028] The system **shall** protect ground support personnel from injury resulting from sharp edges and burrs.		
12.1.4.2	Pinch Point Prevention	[V2 12029] The system **shall** be designed to protect ground personnel from injury due to pinch points.		

Downloaded from http://www.everyspec.com

12.1.4.3	Hazard Controls	[V2 12030] The system **shall** be designed to prevent unnecessary exposure of ground support personnel and equipment to hazards, including spills, electrical shocks, and the release of stored energy.		
12.1.4.4	System Safing for Ground Operations	[V2 12031] The system **shall** alert and allow ground personnel to safe the system before performing any ground operation.		
12.1.4.5	Contamination Controls	[V2 12032] Ground support operations **shall** prevent the introduction of contaminants to the flight vehicle.		
12.1.4.6	Containment of Fluids and Gases	[V2 12033] The system **shall** provide for containment and disposal of the inadvertent release of fluids and gases into the flight system.		
12.1.4.7	Safe Weight Limit	[V2 12034] Hardware and equipment installed or removed by ground support personnel without ground support equipment **shall** be less than a safe weight limit.		
12.1.4.8	Safe Flight System Component Arrangement	[V2 12035] Flight system components **shall** be designed, arranged, or located to prevent hazards, interference, or errors during concurrent ground processing tasks.		
12.1.5.1	Connector Design and Spacing	[V2 12036] Connectors **shall** be designed and spaced to allow for accurate, damage-free mating and demating by ground support personnel.		
12.1.5.2	Connector Incorrect Mating Prevention	[V2 12037] Connectors **shall** be designed to prevent incorrect mating and mismating.		
12.1.6.1	Label Provisions	[V2 12038] Labels and placards **shall** be provided for the ground support personnel to identify items, interpret and follow procedures, and avoid hazards.		
12.1.6.2	Label Standardization	[V2 12039] Labels and placards **shall** be consistent and standardized throughout the system.		
12.1.6.3	Label Content	[V2 12040] The content of labels and placards **shall** be of sufficient size, color contrast, and character height and style to support readability.		
12.1.6.4	Readable Label Positioning	[V2 12041] Labels and placards **shall** be located such that they are readable by the operator, considering ambient lighting conditions.		
12.1.6.5	Non-obstructive Labels	[V2 12042] Labels, placards, or part markings used for ground processing **shall** not visually or operationally interfere with spaceflight crew interface labeling.		
12.2.1	Emergency Egress at the Launch Site	[V2 12043] The system **shall** be designed such that the spaceflight crew and ground support personnel can egress within the time required to preserve the health and safety of all spaceflight crew and ground support personnel in the event of an emergency.		
12.2.2	Emergency Egress to Medical Care	[V2 12044] The system **shall** be designed to ensure spaceflight crew and ground support personnel can egress to a location providing advanced pre-hospital life support.		
12.2.3	Nominal Timely Egress	[V2 12045] Following a post-mission nominal landing, launch scrub, or abort scenario, crew egress from the system **shall** be expedited to ensure crew health.		
12.2.4	Emergency Egress Acceleration Limits	[V2 12046] For ground emergency egress systems, the system **shall** limit the magnitude and direction of crew exposure to accelerations according to ASTM F2291-16, Standard Practice for Design of Amusement Rides and Devices, Section 7, Acceleration Limits. (TBR)*		

Downloaded from http://www.everyspec.com

		** This standard may be revised based on tailoring of the ASTM F2291-16, Standard Practice for Design of Amusement Rides and Devices, to be more specific to human spaceflight parameters.*		

Downloaded from http://www.everyspec.com

APPENDIX E

SPACESUIT SYSTEM APPLICABILITY MATRIX

E.1 Purpose

While spacesuit-specific standards are described in section 11, several requirements from other sections of this NASA Technical Standard are also applicable to spacesuit systems. The purpose of this generic applicability matrix is to serve as a starting point for the tailoring process for future spacesuit designers by indicating those standards that are likely to impact design. Spacesuit designers should work closely with HMTA to tailor the entirety of this NASA Technical Standard to the specific project based on unique mission attributes. Applicable standards for spacesuits are identified in this Appendix (applicable- APP, not applicable- N/A). There are instances in which standards may or may not apply to spacesuit systems, because design approaches and operational concepts may differ significantly among different systems. For example, provision of treatment for decompression sickness may be provided by spacesuits or could alternatively be provided by other vehicle systems. In these instances, standards are designated as potentially applicable (PA). The applicability of standards to spacesuits is also dependent upon the spacesuits' intended functionality. Accordingly, all spacesuit-applicable standards are identified as being applicable to EVA Spacesuits, LEA Spacesuits, or both EVA and LEA Spacesuits as defined below:

• LEA Spacesuit System Definition: Any spacesuit system designed for use during launch, entry, and abort phases of spaceflight, primarily to protect against toxic exposure, ebullism, hypoxia, and decompression sickness in the event of an unplanned cabin depressurization or toxic release into the cabin. It may also be worn during other dynamic phases of flight such as rendezvous and docking during which there is an increased risk of cabin depressurization due to cabin leaks. The duration for which LEA spacesuits are designed to operate will depend on mission scenarios and may range from a few hours to several days per use.

• EVA Spacesuit System Definition: Any spacesuit system designed to allow astronauts to perform tasks outside of a spacecraft or habitat. Performance of spaceflight EVA consists of placing a human in a micro-environment that has to provide all the life support, nutrition, hydration, waste and consumables management function of an actual space vehicle, while allowing crewmembers to perform mission tasks. EVA spacesuits are designed to be used for durations of less than a day due to potential human and suit system constraints. This includes all suited phases (e.g., prebreathe, leak checks, airlock depress).

The Interface column is an important component of the Applicability Matrix, whose purpose is to identify standards that are applicable to interfaces between spacesuits and other systems rather than directly to spacesuits themselves. Standards that require consideration of the suit: system interface are identified in the Interfaces column by an "X", and should be reviewed by designers of both spacesuits and other systems to ensure compatibility amongst all systems in the context of the overall system and mission design. For example, if the suit is being designed for an

Downloaded from http://www.everyspec.com

existing vehicle, the suit has to be designed to fit through existing hatches. However if the vehicle has not yet been built, the suit design may influence the size of the hatches. As another example, the fire protection system standards are marked as an interface interaction in order to capture the scenario in which any suited crew should be alerted to potential issues regarding the vehicle and its fire protection system. Standards that have interface applicability should be considered especially in situations where one of the systems is pre-existing. While effort was made to identify those standards that are likely to directly impact spacesuit design, standards that are marked as N/A should still be examined. This is especially important in those instances in which the Interfaces column has been marked, as these standards have the potential to influence both spacesuit and vehicle design.

Downloaded from http://www.everyspec.com

NASA-STD-3001, Volume 2, Revision B					
Section	Requirement Number	Description	Applicability		
			EVA	LEA	Interfaces
3.5.1	V2 3006	Human-Centered Task Analysis			
4.1.1	V2 4001	Data Sets	APP	APP	
4.1.2	V2 4002	Data Set Characteristics	APP	APP	
4.1.3	V2 4003	Population Definition	APP	APP	
4.1.4	V2 4004	Data Set Assumptions	APP	APP	
4.2.1	V2 4005	Body Length Data	APP	APP	
4.2.2	V2 4006	Changes in Body Length	APP	APP	
4.3	V2 4007	Range of Motion Data	APP	APP	
4.4	V2 4008	Reach Data	APP	APP	
4.5	V2 4009	Body Surface Area Data	APP	APP	
4.6	V2 4010	Body Volume Data	APP	APP	
4.7	V2 4011	Body Mass Data	APP	APP	
4.8.1	V2 4012	Strength Data	APP	APP	
4.8.2	V2 4013	Muscle Effects	APP	APP	
4.9	V2 4015	Aerobic Capacity	APP	APP	
5.1.1	V2 5001	Visual Capabilities	APP	APP	
5.1.2	V2 5002	Auditory Perceptual Capabilities	APP	APP	
5.1.3	V2 5003	Sensorimotor Capabilities	APP	APP	
5.1.4	V2 5004	Cognitive Capabilities	APP	APP	
5.2.1	V2 5005	Time and Performance	APP	APP	
5.2.2	V2 5006	Situational Awareness	APP	APP	
5.2.3	V2 5007	Nominal Cognitive Workload	APP	APP	
5.2.4	V2 5008	Off-Nominal Cognitive Workload	APP	APP	
6.1	V2 6001	Trend Analysis of Environmental Data	APP	APP	
6.2.1.1	V2 6002	Inert Diluent Gas	N/A	N/A	
6.2.1.2	V2 6003	O_2 Partial Pressure Range for Crew Exposure	APP	APP	
6.2.1.3	V2 6004	Nominal Vehicle/Habitat Carbon Dioxide Levels	N/A	N/A	
6.2.2.1	V2 6006	Total Pressure Tolerance Range for Indefinite Crew Exposure	APP	APP	
6.2.2.2	V2 6007	Rate of Pressure Change	APP	APP	
6.2.2.3	V2 6008	Decompression Sickness (DCS) Risk Identification	APP	APP	
6.2.2.4	V2 6009	Decompression Sickness Treatment Capability	PA	PA	X
6.2.3.1	V2 6010	Relative Humidity	N/A	APP	
6.2.3.2	V2 6011	Post-Landing Relative Humidity	N/A	N/A	

Downloaded from http://www.everyspec.com

NASA-STD-3001, Volume 2, Revision B					
Section	Requirement Number	Description	Applicability		
			EVA	LEA	Interfaces
6.2.4.1	V2 6012	Comfort Zone	N/A	PA	X
6.2.4.2	V2 6013	Temperature Comfort Range	N/A	N/A	
6.2.4.3	V2 6014	Crewmember Heat Storage	N/A	APP	
6.2.5.1	V2 6017	Atmospheric Control	N/A	N/A	X
6.2.5.2	V2 6019	Remote Adjustment	PA	PA	
6.2.6.1	V2 6020	Atmospheric Data Recording	N/A	N/A	
6.2.6.2	V2 6021	Atmospheric Data Displaying	N/A	N/A	
6.2.7.1	V2 6022	Atmospheric Monitoring and Alerting	N/A	N/A	
6.2.7.2	V2 6023	Trace Constituent Monitoring and Alerting	N/A	N/A	
6.2.7.3	V2 6024	Combustion Monitoring and Alerting	N/A	N/A	X
6.2.7.4	V2 6025	Contamination Monitoring and Alerting	N/A	N/A	X
6.3.1.1	V2 6026	Water Physiochemical Limits	APP	APP	X
6.3.1.2	V2 6027	Water Microbial Limits	APP	APP	
6.3.1.3	V2 6105	Total Iodine Concentration at the Point of Consumption	APP	APP	
6.3.2.1	V2 6029	Drinking Water Quantity	N/A	N/A	
6.3.2.2	V2 6030	Food Rehydration Water Quantity	N/A	N/A	
6.3.2.3	V2 6031	Hot Rehydration Water Quantity	N/A	N/A	
6.3.2.4	V2 6032	Personal Hygiene Water Quantity	N/A	N/A	
6.3.2.5	V2 6033	Eye Irrigation Water Quantity	N/A	N/A	
6.3.2.6	V2 6034	Medical Contingency Water Quantity	N/A	N/A	
6.3.2.7	V2 6035	Water Quantity for Suited EVA Operations	N/A	N/A	X
6.3.2.8	V2 6036	Fluid Loading Water Quantity for Earth Entry	N/A	PA	
6.3.2.9	V2 6037	Crew Recovery Water Quantity	N/A	PA	
6.3.2.10	V2 6038	Sampling Water Quantity	N/A	N/A	
6.3.3.1	V2 6039	Water Dispensing Rate	N/A	N/A	
6.3.3.2	V2 6040	Water Dispensing Increments	N/A	N/A	
6.3.4.1	V2 6041	Hot Beverage Water Temperature	N/A	N/A	
6.3.4.2	V2 6042	Cold Beverage Water Temperature	N/A	N/A	
6.3.4.3	V2 6043	Food Hydration Water Temperature	N/A	N/A	
6.3.4.4	V2 6044	Personal Hygiene Water Temperature	N/A	N/A	
6.3.4.5	V2 6045	Medical Water Temperature	N/A	N/A	
6.3.5	V2 6046	Water Quality Monitoring	N/A	N/A	X
6.4.1.1	V2 6047	Toxic Hazard Level Three	APP	APP	
6.4.1.2	V2 6048	Toxic Hazard Level Four	APP	APP	

Downloaded from http://www.everyspec.com

NASA-STD-3001, Volume 2, Revision B					
Section	Requirement Number	Description	Applicability		
			EVA	LEA	Interfaces
6.4.1.3	V2 6049	Chemical Decomposition	APP	APP	
6.4.2	V2 6050	Atmosphere Contamination Limit – Airborne Contaminants	APP	APP	
6.4.3	V2 6051	Water Contamination Control	APP	APP	
6.4.4.1	V2 6052	Particulate Matter	N/A	N/A	X
6.4.4.2	V2 6053	Lunar Dust Contamination	PA	N/A	X
6.4.5.1	V2 6054	Fungal Contamination	APP	APP	
6.4.5.2	V2 6055	Bacterial Contamination	APP	APP	
6.4.5.3	V2 6056	Surface Cleanability	APP	APP	
6.4.5.4	V2 6057	Surface Microbial Contamination during Nominal Systems Operations	APP	APP	
6.4.5.5	V2 6058	Condensation Limitation	APP	APP	
6.4.5.6	V2 6059	Microbial Air Contamination Prevention	APP	APP	
6.4.5.7	V2 6060	Biological Payloads	N/A	N/A	
6.4.6	V2 6061	Cross-Contamination	APP	APP	
6.4.7	V2 6062	Availability of Environmental Hazards Information	N/A	N/A	X
6.4.8	V2 6063	Contamination Cleanup	APP	APP	X
6.5.1	V2 6064	Sustained Translational Acceleration Limits	N/A	N/A	X
6.5.2.1	V2 6065	Rotational Velocity	N/A	N/A	X
6.5.2.2	V2 6066	Sustained Rotational Acceleration Due to Cross-Coupled Rotation	N/A	N/A	X
6.5.2.3	V2 6067	Transient Rotational Acceleration	N/A	N/A	X
6.5.3.1	V2 6068	Acceleration Rate of Change	N/A	N/A	X
6.5.3.2	V2 6069	Acceleration Injury Prevention	N/A	APP	X
6.5.3.3	V2 6070	Injury Risk Criterion	N/A	APP	X
6.6.1.1	V2 6073	Launch, Entry, and Abort Noise Exposure Limits	N/A	APP	
6.6.1.2	V2 6074	Ceiling Limit for Launch and Entry	N/A	APP	
6.6.1.3	V2 6075	Ceiling Limit for Launch Abort	N/A	APP	
6.6.1.4	V2 6076	Launch, Entry, and Abort Impulse Noise Limits	N/A	APP	
6.6.1.5	V2 6077	Hazardous Noise Limits for all Phases Except Launch, Entry, and Abort	APP	N/A	
6.6.1.6	V2 6078	Continuous Noise Limits	N/A	N/A	
6.6.1.7	V2 6079	Crew Sleep Continuous Noise Limits	N/A	N/A	
6.6.1.8	V2 6080	Intermittent Noise Limits	APP	APP	X
6.6.1.9	V2 6081	Alarm Maximum Sound Level Limit	APP	N/A	
6.6.1.10	V2 6082	Annoyance Noise Limits for Crew Sleep	N/A	APP	

Downloaded from http://www.everyspec.com

NASA-STD-3001, Volume 2, Revision B					
Section	Requirement Number	Description	Applicability		
			EVA	LEA	Interfaces
6.6.1.11	V2 6083	Impulse Noise Limit	APP	APP	
6.6.1.12	V2 6084	Narrow-Band Noise Limits	APP	APP	X
6.6.1.13	V2 6085	Infrasonic Sound Pressure Limits	N/A	N/A	X
6.6.1.14	V2 6106	Noise Limit for Personal Communication Devices	APP	APP	
6.6.2.1	V2 6087	Acoustic Monitoring	N/A	N/A	X
6.6.2.2	V2 6088	Individual Noise Exposure Monitoring	N/A	N/A	
6.7.1.1	V2 6089	Vibration During Pre-Flight	N/A	N/A	
6.7.1.2	V2 6090	Vibration Exposures During Dynamic Phases of Flight	N/A	N/A	X
6.7.1.3	V2 6091	Long-Duration Vibration Exposure Limits for Health during Non-Sleep Phases of Mission	APP	N/A	
6.7.1.4	V2 6092	Vibration Exposure Limits during Sleep	N/A	N/A	
6.7.1.5	V2 6093	Vibration Limits for Performance	PA	N/A	X
6.7.2	V2 6094	Hand Vibration	PA	N/A	X
6.8.1.1	V2 6095	Ionizing Radiation Protection Limit	PA	PA	
6.8.1.2	V2 6096	Crew Age/Gender Definition for Design Requirements	N/A	N/A	
6.8.1.3	V2 6097	Crew Radiation Exposure Limits	APP	APP	
6.8.1.4	V2 6098	Radiation Environments	APP	APP	
6.8.1.5	V2 6099	Space Weather Monitoring	N/A	N/A	
6.8.1.6	V2 6100	Ionizing Radiation Alerting	PA	PA	
6.8.1.7	V2 6101	Ionizing Radiation Dose Monitoring	N/A	PA	
6.8.2.1	V2 6102	RF Non-Ionizing Radiation Exposure Limits	APP	APP	
6.8.2.2	V2 6103	Laser Exposure Limits	PA	PA	
6.8.2.3	V2 6104	Limits on Exposure to Incoherent Electromagnetic Radiation	APP	APP	
7.1.1.1	V2 7001	Food Quality	N/A	N/A	
7.1.1.2	V2 7002	Food Acceptability	N/A	N/A	X
7.1.1.3	V2 7003	Food Caloric Content	N/A	N/A	
7.1.1.4	V2 7004	EVA Food Caloric Content	N/A	N/A	X
7.1.1.5	V2 7005	Food Macronutrients	N/A	N/A	
7.1.1.6	V2 7006	Food Micronutrients	N/A	N/A	
7.1.1.7	V2 7007	Food Microorganism Levels	N/A	N/A	
7.1.2.1	V2 7008	Food Preparation	N/A	N/A	X
7.1.2.2	V2 7009	Food Preparation and Cleanup	N/A	N/A	
7.1.2.3	V2 7010	Food Contamination Control	N/A	N/A	
7.1.2.4	V2 7011	Food and Beverage Heating	N/A	N/A	

Downloaded from http://www.everyspec.com

NASA-STD-3001, Volume 2, Revision B					
Section	Requirement Number	Description	Applicability		
			EVA	LEA	Interfaces
7.1.2.5	V2 7012	Dining Accommodations	N/A	N/A	
7.1.2.6	V2 7013	Food System Waste	N/A	N/A	
7.1.2.7	V2 7014	Food Spill Control	APP	APP	
7.1.2.8	V2 7015	Food System Cleaning and Sanitizing	N/A	N/A	X
7.2.1	V2 7016	Personal Hygiene Capability	N/A	N/A	
7.2.2	V2 7017	Body Cleansing Privacy	N/A	N/A	
7.2.3	V2 7018	Personal Hygiene Provision	N/A	N/A	
7.2.4	V2 7019	Hygiene Maintainability	N/A	N/A	
7.3.1.1	V2 7020	Body Waste Management Capability	N/A	N/A	
7.3.1.2	V2 7021	Body Waste Management System Location	N/A	N/A	
7.3.1.3	V2 7022	Body Waste Management Privacy	N/A	N/A	
7.3.1.4	V2 7023	Body Waste Management Provision	N/A	N/A	
7.3.1.5	V2 7024	Body Waste Accommodation	APP	APP	
7.3.1.6	V2 7025	Body Waste Containment	N/A	N/A	
7.3.1.7	V2 7026	Body Waste Odor	APP	APP	
7.3.1.8	V2 7027	Body Waste Trash Receptacle Accessibility	N/A	N/A	
7.3.1.9	V2 7028	Private Body Inspection Accommodation	N/A	N/A	
7.3.1.10	V2 7029	Body Waste Management Maintenance	N/A	N/A	X
7.3.2.1	V2 7030	Average Feces per Day	APP	APP	
7.3.2.2	V2 7031	Maximum Feces per Event	APP	APP	
7.3.2.3	V2 7032	Average Diarrhea per Day	N/A	APP	
7.3.2.4	V2 7033	Maximum Diarrhea per Event	APP	APP	
7.3.2.5	V2 7085	Fecal and Urine Elimination Concurrence			
7.3.2.6	V2 7034	Urine Capacity	N/A	N/A	
7.3.2.7	V2 7035	Urine per Crewmember	N/A	N/A	
7.3.2.8	V2 7036	Urine Rate	APP	APP	
7.3.2.9	V2 7037	Vomitus per Collection and Containment	APP	APP	
7.4.1	V2 7038	Physiological Countermeasures Capability	N/A	N/A	
7.4.2	V2 7039	Volume Accommodations	N/A	N/A	
7.4.3	V2 7040	Physiological Countermeasure Operations	N/A	N/A	
7.4.4	V2 7041	Environmental Control	N/A	N/A	
7.4.5	V2 7042	Orthostatic Intolerance Countermeasures	PA	PA	
7.5.1	V2 7043	Medical Capability	N/A	N/A	
7.5.2	V2 7044	Medical Treatment Spatial Accommodation	N/A	N/A	X

Downloaded from http://www.everyspec.com

NASA-STD-3001, Volume 2, Revision B					
Section	Requirement Number	Description	Applicability		
			EVA	LEA	Interfaces
7.5.3	V2 7045	Medical Equipment Usability	N/A	N/A	X
7.5.4	V2 7046	Medical Treatment Restraints	N/A	N/A	
7.5.5	V2 7047	Biological Waste Containment and Disposal	N/A	N/A	
7.5.6	V2 7048	Medical Equipment Disposal	N/A	N/A	
7.5.7	V2 7049	Deceased Crew	PA	PA	
7.6.1.1	V2 7050	Stowage Provisions	PA	PA	
7.6.1.2	V2 7051	Personal Stowage	N/A	N/A	
7.6.1.3	V2 7052	Stowage Location	N/A	N/A	X
7.6.1.4	V2 7053	Stowage Interference	N/A	N/A	
7.6.1.5	V2 7054	Stowage Restraints	PA	PA	
7.6.2.1	V2 7055	Priority of Stowage Accessibility	N/A	N/A	X
7.6.2.2	V2 7056	Stowage Operation without Tools	N/A	N/A	X
7.6.2.3	V2 7057	Stowage Access while Suited	APP	APP	X
7.6.3	V2 7058	Identification System	N/A	N/A	X
7.7.1	V2 7059	Inventory Tracking	N/A	N/A	X
7.7.2	V2 7060	Inventory Operations	N/A	N/A	X
7.7.3	V2 7061	Nomenclature Consistency	APP	APP	
7.7.4	V2 7062	Unique Item Identification	APP	APP	
7.7.5	V2 7063	Interchangeable Item Nomenclature	APP	APP	
7.8.1.1	V2 7064	Trash Accommodation	N/A	N/A	
7.8.1.2	V2 7065	Trash Volume Allocation	N/A	N/A	X
7.8.1.3	V2 7066	Trash Stowage Interference	N/A	N/A	
7.8.2	V2 7067	Trash Odor Control	N/A	N/A	
7.8.3	V2 7068	Trash Contamination Control	N/A	N/A	
7.8.4	V2 7069	Labeling of Hazardous Waste	N/A	N/A	
7.9.1	V2 7070	Sleep Accommodation	N/A	N/A	
7.9.2	V2 7071	Behavioral Health Policy	N/A	N/A	
7.9.3	V2 7073	Partial-g Sleeping	N/A	N/A	
7.10.1	V2 7074	Clothing Quantity	N/A	N/A	
7.10.2	V2 7075	Exclusive Use	N/A	N/A	
7.10.3	V2 7076	Safety and Comfort	APP	APP	
7.10.4	V2 7077	Clothing Donning and Doffing	APP	APP	
7.11.1	V2 7079	Accessibility for Cleaning	APP	APP	
7.11.2	V2 7080	Particulate Control	APP	APP	

Downloaded from http://www.everyspec.com

NASA-STD-3001, Volume 2, Revision B					
Section	Requirement Number	Description	Applicability		
			EVA	LEA	Interfaces
7.11.3	V2 7081	Surface Material Selection	APP	APP	
7.11.4	V2 7082	Surface Material Cleaning	APP	APP	
7.11.5	V2 7083	Cleaning Materials	APP	APP	
7.12	V2 7084	Recreational Capabilities	N/A	N/A	
8.1.1	V2 8001	Volume Allocation	N/A	N/A	X
8.1.2	V2 8002	Volume for Crewmember Accommodation	N/A	N/A	
8.1.3	V2 8003	Volume for Mission Accommodation	N/A	N/A	X
8.2.1.1	V2 8005	Functional Arrangement	N/A	N/A	
8.2.1.2	V2 8006	Interference	N/A	N/A	
8.2.2.1	V2 8007	Spatial Orientation	N/A	N/A	
8.2.2.2	V2 8008	Consistent Orientation	N/A	N/A	
8.2.2.3	V2 8009	Interface Orientation	N/A	N/A	
8.2.3.1	V2 8010	Location Identifiers	N/A	N/A	
8.2.3.2	V2 8011	Location Aids	N/A	N/A	
8.2.3.3	V2 8012	Visual Distinctions	N/A	N/A	
8.3.1	V2 8013	Internal Translation Paths	N/A	N/A	X
8.3.2	V2 8014	Emergency Translation Paths	N/A	N/A	X
8.3.3	V2 8015	Ingress, Egress, and Escape Translation Paths	N/A	N/A	X
8.3.4	V2 8016	Translation Path Interference	N/A	N/A	X
8.3.5	V2 8017	Simultaneous Use	N/A	N/A	X
8.3.6	V2 8018	Hazard Avoidance	N/A	N/A	X
8.3.7	V2 8019	Path Visibility	N/A	N/A	X
8.3.8	V2 8020	Crew Egress Translation Path - Ground	N/A	APP	X
8.3.9	V2 8021	Crew Ingress/Egress Translation Path in Space	APP	APP	X
8.3.10	V2 11002	Translation Paths for Suited Crewmembers	N/A	N/A	X
8.3.11	V2 11005	EVA Translation Path Hazard Avoidance	N/A	N/A	X
8.4.1.1	V2 8022	Hatch Cover and Door Operation without Tools	N/A	N/A	X
8.4.1.2	V2 8023	Unlatching Hatch Covers	N/A	N/A	X
8.4.1.3	V2 8024	Hatch Cover and Door Operating Times	N/A	N/A	X
8.4.1.4	V2 8025	Hatch Cover and Door Operating Force	N/A	N/A	X
8.4.1.5	V2 8026	Hatch Cover and Door Gravity Operations	N/A	N/A	X
8.4.2.1	V2 8027	Hatch Size and Shape	N/A	N/A	X
8.4.2.2	V2 8028	Pressure Equalization across the Hatch	N/A	N/A	X
8.4.2.3	V2 8029	Visibility across the Hatch	N/A	N/A	X

Downloaded from http://www.everyspec.com

NASA-STD-3001, Volume 2, Revision B					
Section	Requirement Number	Description	Applicability		
			EVA	LEA	Interfaces
8.4.3.1	V2 8030	Hatch Cover and Door Interference	N/A	N/A	X
8.4.3.2	V2 8031	Hatch Cover Closure and Latching Status Indication	N/A	N/A	
8.4.3.3	V2 8032	Hatch Cover Pressure Indication	N/A	N/A	
8.5.1	V2 8033	Crew Restraint Provision	N/A	APP	X
8.5.2	V2 8034	Crew Restraint Design	N/A	N/A	X
8.5.3	V2 8035	Crew Restraint Posture Accommodation	N/A	N/A	
8.5.4	V2 8036	Crew Restraint Interference	N/A	N/A	X
8.5.5	V2 8037	Crew Restraints for Controls Operation	N/A	N/A	X
8.5.6	V2 8038	Mobility Aid Standardization	N/A	N/A	X
8.5.7	V2 8039	Mobility Aid Structural Strength	N/A	N/A	
8.5.8	V2 8040	Mobility Aid for Assisted Ingress and Egress	N/A	N/A	X
8.5.9	V2 8041	Unassisted Ingress, Egress, and Escape Mobility Aids	APP	APP	X
8.5.10	V2 8042	IVA Operations Mobility Aids	N/A	N/A	X
8.5.11	V2 11003	Mobility Aid Provision for Suited Operations	N/A	N/A	X
8.5.12	V2 11012	Restraints for Suited Operations - Provision	N/A	N/A	X
8.6.1.1	V2 8043	Window Provisioning	N/A	N/A	
8.6.1.2	V2 8045	Window Optical Properties	N/A	N/A	
8.6.1.3	V2 8046	Window Obstruction	N/A	N/A	
8.6.2.1	V2 8049	Window Light Blocking	N/A	N/A	
8.6.2.2	V2 8050	Window Accessory Replacement/Operation without Tools	N/A	N/A	
8.7.1	V2 8051	Illumination Levels	APP	APP	
8.7.2	V2 8052	Exterior Lighting	APP	N/A	X
8.7.3	V2 8053	Emergency Lighting	N/A	N/A	X
8.7.4	V2 8059	Lighting Chromaticity	APP	APP	
8.7.5	V2 8060	Lighting Color Accuracy	APP	APP	
8.7.6	V2 8055	Circadian Entrainment	N/A	N/A	
8.7.7	V2 8056	Lighting Controls	APP	APP	
8.7.8	V2 8057	Lighting Adjustability	N/A	N/A	
8.7.9	V2 8058	Glare Prevention	APP	APP	
9.1.1	V2 9001	Crew Interface Commonality	APP	APP	
9.1.2	V2 9002	Differentiation	APP	APP	
9.1.3	V2 9003	Routine Operation	APP	APP	
9.2	V2 9004	Training Minimization	APP	APP	
9.3.1.1	V2 9005	Mechanical Hazard	APP	APP	

Downloaded from http://www.everyspec.com

NASA-STD-3001, Volume 2, Revision B					
Section	Requirement Number	Description	Applicability		
			EVA	LEA	Interfaces
9.3.1.2	V2 9006	Entrapment	APP	APP	
9.3.1.3	V2 9007	Potential Energy	APP	APP	
9.3.1.4	V2 9008	Protection from Projectiles and Structural Collapse	APP	APP	
9.3.1.5	V2 9009	Sharp Corners and Edges - Fixed	APP	APP	
9.3.1.6	V2 9010	Protection from Functionally Sharp Items	APP	APP	
9.3.1.7	V2 9011	Sharp Corners and Edges - Loose	APP	APP	
9.3.1.8	V2 9012	Burrs	APP	APP	
9.3.1.9	V2 9013	Pinch Points	APP	APP	
9.3.1.10	V2 9014	High-Temperature Exposure	APP	APP	
9.3.1.11	V2 9015	Low-Temperature Exposure	APP	APP	
9.3.1.12	V2 9016	Equipment Handling	APP	APP	
9.3.2.1	V2 9017	Power Interruption	APP	APP	
9.3.2.2	V2 9018	Energized Status	APP	APP	
9.3.2.3	V2 9019	Nominal Physiological Electrical Current Limits	APP	APP	
9.3.2.3.1.1	V2 9020	Catastrophic Physiological Electrical Current Limits for All Circumstances	APP	APP	
9.3.2.3.1.2	V2 9021	Catastrophic Physiological Electrical Current Limits for Startle Reaction	APP	APP	
9.3.2.3.2	V2 9022	Body Impedence for Voltage Calculations Utilizing Electrical Current Thresholds	APP	APP	
9.3.2.4	V2 9023	Leakage Currents – Equipment Designed for Human Contact	APP	APP	
9.3.3.1	V2 9024	Fluid/Gas Release	APP	APP	
9.3.3.2	V2 9025	Fluid/Gas Isolation	APP	APP	
9.3.3.3	V2 9026	Fluid/Gas Containment	APP	APP	
9.4.1	V2 9027	Protection	APP	APP	
9.4.2	V2 9028	Isolation of Crew from Spacecraft Equipment	N/A	N/A	
9.5.1	V2 9029	Hardware and Equipment Mounting and Installation	APP	APP	
9.5.2.1	V2 9030	Connector Spacing	APP	APP	
9.5.2.2	V2 9031	Connector Actuation without Tools	APP	APP	
9.5.2.3	V2 9032	Incorrect Mating, Demating Prevention	APP	APP	
9.5.2.4	V2 9033	Mating, Demating Hazards	APP	APP	
9.6.1	V2 9034	Cable Management	APP	APP	
9.6.2	V2 9035	Cable Identification	APP	APP	
9.7.1.1	V2 9036	Design for Maintenance	APP	APP	

Downloaded from http://www.everyspec.com

NASA-STD-3001, Volume 2, Revision B					
Section	Requirement Number	Description	Applicability		
			EVA	LEA	Interfaces
9.7.1.2	V2 9037	Commercial Off-the-Shelf Equipment Maintenance	N/A	N/A	
9.7.1.3	V2 9038	In-Flight Tool Set	APP	APP	
9.7.2.1	V2 9039	Maintenance Time	APP	APP	
9.7.2.2	V2 9040	Minimizing Maintenance	APP	APP	
9.7.2.3	V2 9041	Equipment Modularity	APP	APP	
9.7.2.4	V2 9042	Captive Fasteners	APP	APP	
9.7.2.5	V2 9043	Minimum Number of Fasteners - Item	APP	APP	
9.7.2.6	V2 9044	Minimum Variety of Fasteners - System	APP	APP	
9.7.3.1	V2 9045	Maintenance Item Location	APP	APP	
9.7.3.2	V2 9046	Check and Service Point Accessibility	APP	APP	
9.7.3.3	V2 9047	Maintenance Accommodation	APP	APP	
9.7.3.4	V2 9048	Visual Access for Maintenance	APP	APP	
9.7.3.5	V2 9049	Hand Clearance for Maintenance	N/A	N/A	X
9.7.3.6	V2 9050	Tool Clearance	N/A	N/A	X
9.7.4.1	V2 9051	Fault Detection	APP	APP	
9.7.4.2	V2 9052	Failure Notification	APP	APP	
9.8.1.1.1	V2 9053	Protective Equipment	N/A	APP	
9.8.1.1.2	V2 9054	Protective Equipment Use	N/A	APP	
9.8.1.1.3	V2 9055	Protective Equipment Automation	N/A	APP	
9.8.1.2.1	V2 9056	Use of Hearing Protection	N/A	N/A	
9.8.1.2.2	V2 9057	Hearing Protection Provision	N/A	N/A	
9.8.1.2.3	V2 9058	Hearing Protection Interference	N/A	N/A	
9.8.2.1	V2 9059	Fire Detecting, Warning, and Extinguishing	N/A	N/A	X
9.8.2.2	V2 9060	Fire Protection System Health and Status	N/A	N/A	X
9.8.2.3	V2 9061	Fire Protection System Failure Alerting	N/A	N/A	X
9.8.2.4	V2 9062	Fire Protection System Activation	N/A	N/A	X
9.8.2.5	V2 9063	Portable Fire Extinguishers	N/A	N/A	X
9.8.3	V2 9064	Emergency Equipment Accessibility	N/A	APP	X
10.1.1.1	V2 10001	Usability Acceptance Criteria	APP	APP	
10.1.1.2	V2 10002	Crew Interface Effectiveness	APP	APP	
10.1.1.3	V2 10003	Crew Interface Efficiency	APP	APP	
10.1.2.1	V2 10004	Controllability and Maneuverability	N/A	N/A	X
10.1.3.1	V2 10005	Crew Interfaces Standardization	APP	APP	
10.1.3.2	V2 10006	Operations Nomenclature Standardization	APP	APP	

Downloaded from http://www.everyspec.com

NASA-STD-3001, Volume 2, Revision B					
Section	Requirement Number	Description	Applicability		
			EVA	LEA	Interfaces
10.1.3.3	V2 10007	Display Standards, Labelling Plan, and Icon Library	APP	APP	
10.1.3.4	V2 10008	Units of Measure	APP	APP	
10.1.3.5	V2 10009	Crew Interface Operations Standardization	APP	APP	
10.1.3.6	V2 10010	Consistent Displays and Controls	APP	APP	
10.1.3.7	V2 10011	Displays and Controls Commonality	APP	APP	
10.1.3.8	V2 10012	Consistent Procedures	APP	APP	
10.1.4.1	V2 10013	Display and Control Distinctions	APP	APP	
10.1.4.2	V2 10014	Syntax Distinction	APP	APP	
10.1.5.1	V2 10015	Use of Cues	APP	APP	
10.1.5.2	V2 10016	Cue Saliency	APP	APP	
10.1.6.1	V2 10017	System Health and Status	APP	APP	
10.1.6.2	V2 10018	System Messages	APP	APP	
10.1.6.3	V2 10019	Display Update	APP	APP	
10.1.6.4	V2 10020	Missing Data Display	APP	APP	
10.1.6.5	V2 10021	Control Feedback	APP	APP	
10.1.6.6	V2 10022	System Feedback	APP	APP	
10.1.7.1	V2 10023	Current Procedure Step	APP	APP	
10.1.7.2	V2 10024	Completed Procedure Steps	APP	APP	
10.1.7.3	V2 10025	View of Procedure Steps	APP	APP	
10.1.7.4	V2 10026	Procedure Flexibility	APP	APP	
10.1.8.1	V2 10027	Inadvertent Operation Prevention	APP	APP	
10.1.8.2	V2 10028	Inadvertent Operation Recovery	APP	APP	
10.2.1.1	V2 10030	Display and Control Location and Design	APP	APP	
10.2.1.2	V2 10031	High Priority Displays and Controls	APP	APP	
10.2.2	V2 10032	Display and Control Grouping	APP	APP	
10.2.3.1	V2 10033	Display-Control Relationships	APP	APP	
10.2.3.2	V2 10034	Display and Control Movement Compatibility	APP	APP	
10.2.3.3	V2 10035	Display and Control Sequence of Use	APP	APP	
10.3.1.1	V2 10036	Display Identifying Features	APP	APP	
10.3.1.2	V2 10037	Display Area	APP	APP	
10.3.2.1	V2 10038	Display Interpretation	APP	APP	
10.3.2.2	V2 10039	Display Readability	APP	APP	
10.3.2.3	V2 10040	Display Information	APP	APP	
10.3.2.4	V2 10042	Display Information Flow	APP	APP	

Downloaded from http://www.everyspec.com

NASA-STD-3001, Volume 2, Revision B					
Section	Requirement Number	Description	Applicability		
			EVA	LEA	Interfaces
10.3.2.5	V2 10043	Display Navigation	APP	APP	
10.3.2.6	V2 10044	Display Nomenclature	APP	APP	
10.3.2.7	V2 10045	Display Coding Redundancy	APP	APP	
10.3.2.8	V2 10046	Measurement Units	APP	APP	
10.3.3.1	V2 10047	Visual Display Legibility	APP	APP	
10.3.3.2	V2 10048	Visual Display Parameters	APP	APP	
10.3.3.3	V2 10049	Visual Display Character Parameters	APP	APP	
10.3.3.4	V2 10050	Display Font	APP	APP	
10.3.4.1.1	V2 10052	Intelligibility of Electronically Stored Speech Messages	APP	APP	
10.3.4.1.2	V2 10053	Sound Pressure Level	APP	APP	
10.3.4.1.3	V2 10054	Sound Distortion Level	APP	APP	
10.3.4.1.4	V2 10055	Distinguishable and Consistent Alarms	APP	APP	
10.3.4.2.1	V2 10056	Audio Display Sound Level	APP	APP	
10.3.4.2.2	V2 10057	Reverberation Time	N/A	APP	
10.3.4.2.3	V2 10058	Frequency	APP	APP	
10.3.4.2.4	V2 10059	Auditory Alarms for Sleeping Crewmembers	N/A	N/A	X
10.3.5.1	V2 10060	Label Provision	AP***P	APP	
10.3.5.2	V2 10061	Label Standardization	APP	APP	
10.3.5.3	V2 10062	Label Display Requirements	APP	APP	
10.3.5.4	V2 10063	Label Location	APP	APP	
10.3.5.5	V2 10064	Label Categories	APP	APP	
10.3.5.6	V2 10065	Label Distinction	APP	APP	
10.3.5.7	V2 10066	Label Font Height	APP	APP	
10.4.1	V2 10067	Control Shape	APP	APP	
10.4.2.1	V2 10068	Control Identification	APP	APP	
10.4.2.2	V2 10069	Emergency Control Coding	APP	APP	
10.4.3.1	V2 10070	Control Size and Spacing	APP	APP	
10.4.3.2	V2 10071	Control Arrangement and Location	APP	APP	
10.4.3.3	V2 10072	Control Proximity	APP	APP	
10.4.3.4	V2 10073	Control Operation during Accelerations	N/A	N/A	X
10.4.4.1	V2 10074	Control Operating Characteristics	APP	APP	
10.4.4.2	V2 10075	Control Input-Response Compatibility	APP	APP	
10.4.4.3	V2 10076	Control Latency	APP	APP	
10.4.4.4	V2 10077	Control Resistive Force	APP	APP	

Downloaded from http://www.everyspec.com

NASA-STD-3001, Volume 2, Revision B					
Section	Requirement Number	Description	Applicability		
			EVA	LEA	Interfaces
10.4.4.5	V2 10078	Detent Controls	APP	APP	
10.4.4.6	V2 10079	Stops Controls	APP	APP	
10.4.5.1	V2 10080	Command Confirmation	APP	APP	
10.4.6.1	V2 10081	Suited Control Operations	APP	APP	
10.4.6.2	V2 10082	Suited Control Spacing	APP	APP	
10.5.1	V2 10083	Communication System Design	APP	APP	
10.5.2	V2 10084	Communication Capability	APP	APP	X
10.5.3.1	V2 10085	Communication Speech Levels	APP	APP	
10.5.3.2	V2 10086	Communication Operational Parameters	APP	APP	
10.5.3.3	V2 10087	Communication Environmental Parameters	APP	APP	
10.5.3.4	V2 10088	Communication Controls and Procedures	APP	APP	
10.5.3.5	V2 10089	Communication Transmitter and Receiver Configuration	APP	APP	
10.5.3.6	V2 10090	Audio Communications Quality	APP	APP	
10.5.3.7	V2 10091	Speech Intelligibility	APP	APP	
10.5.3.8	V2 10093	Private Audio Communication	N/A	N/A	X
10.5.4.1	V2 10094	Video Communications Visual Quality	APP	APP	
10.5.4.2	V2 10095	Video Communications Spatial Resolution	APP	APP	
10.5.4.3	V2 10096	Video Communications Temporal Resolution	APP	APP	
10.5.4.4	V2 10097	Video Communications Color and Intensity	APP	APP	
10.5.4.5	V2 10098	Video Communications Bit Rate	APP	APP	
10.5.4.6	V2 10099	Audio-Visual Lag Time	APP	APP	
10.6.1.1	V2 10100	Automated and Robotic System Provision	APP	APP	
10.6.1.2	V2 10101	Automated and Robotic System Design	APP	APP	
10.6.1.3	V2 10102	Robotic Control Stations - Common and Consistent	N/A	N/A	X
10.6.1.4	V2 10103	Automated and Robotic System Situational Awareness	N/A	N/A	X
10.6.1.5	V2 10104	Automation Levels	APP	APP	
10.6.1.6	V2 10105	Automation Level Status Indication	APP	APP	
10.6.1.7	V2 10106	Robotic System Status	N/A	N/A	X
10.6.1.8	V2 10107	Robotic System Arbitration	N/A	N/A	X
10.6.1.9	V2 10108	Automated and Robotic System Operation – with Communication Limitations	APP	APP	
10.6.1.10	V2 10109	Automation and Robotics Shut-Down Capabilities	APP	APP	
10.6.1.11	V2 10110	Automation and Robotics Override Capabilities	APP	APP	
10.6.1.12	V2 10111	Crew Interfaces to Robotic Systems - Spatial Disorientation	N/A	N/A	

Downloaded from http://www.everyspec.com

NASA-STD-3001, Volume 2, Revision B					
Section	Requirement Number	Description	Applicability		
			EVA	LEA	Interfaces
10.6.1.13	V2 10112	Crew Interfaces to Robotic Systems - Frames of Reference	N/A	N/A	
10.7.1	V2 10113	Information Management Capabilities – Provision	APP	APP	
10.7.2.1	V2 10114	Visual and Audio Annunciations	APP	APP	
10.7.2.2	V2 10115	Set-Point Alerts	APP	APP	
10.7.2.3	V2 10116	Audio Annunciation Silencing	APP	APP	
10.7.2.4	V2 10117	Visual and Auditory Annunciation Failures	APP	APP	
10.7.2.5	V2 10118	Visual Alerts – Red	APP	APP	
10.7.2.6	V2 10119	Visual Alerts – Yellow	APP	APP	
10.7.3.1	V2 10120	Information Management Methods and Tools	APP	APP	
10.7.3.2	V2 10121	Information Management Standard Nomenclature	APP	APP	
10.7.3.3	V2 10122	Information Management Compatibility	APP	APP	
10.7.3.4	V2 10123	Information Management Operation Rate	APP	APP	
10.7.3.5	V2 10124	Information Management Data Provision	APP	APP	
10.7.3.6	V2 10125	Information Management Security	APP	APP	
10.7.3.7	V2 10126	Information Management Ground Access	APP	APP	
10.7.3.8	V2 10127	Information Capture and Transfer	PA	PA	X
10.7.3.9	V2 10128	Information Annotation	N/A	N/A	
10.7.3.10	V2 10129	Information Backup and Restoration	PA	PA	X
10.7.3.11	V2 10130	Alternative Information Sources	APP	APP	
10.7.3.12	V2 10131	Software System Recovery	APP	APP	
11.1.1	V2 11001	Suited Donning and Doffing	APP	APP	X
11.1.2.1	V2 11006	Suit Pressure Set-Points	APP	APP	
11.1.2.2	V2 11007	Suit Equilibrium Pressure	APP	APP	
11.1.2.3	V2 11009	Continuous Noise in Spacesuits	APP	APP	
11.1.2.4	V2 11010	EVA Suit Radiation Monitoring	APP	N/A	X
11.1.2.5	V2 11011	Suited Crewmember Heat Storage	APP	N/A	
11.1.3.1	V2 11013	Suited Body Waste Management – Provision	APP	APP	
11.1.3.2	V2 11028	EVA Suit Urine Collection	APP	N/A	
11.1.3.3	V2 11014	LEA Suit Urine Collection	N/A	APP	X
11.1.3.4	V2 11015	Suit Urine Collection per Day – Contingency	N/A	APP	X
11.1.3.5	V2 11016	Suit Feces Collection per Day – Contingency	N/A	APP	
11.1.3.6	V2 11017	Suit Isolation of Vomitus	APP	APP	X
11.1.4.1	V2 11018	Suited Field of Regard	APP	APP	X
11.1.4.2	V2 11019	Suit Helmet Optical Quality	APP	APP	

Downloaded from http://www.everyspec.com

NASA-STD-3001, Volume 2, Revision B					
Section	Requirement Number	Description	Applicability		
			EVA	LEA	Interfaces
11.1.4.3	V2 11020	Suit Helmet Luminance Shielding	APP	APP	
11.1.4.4	V2 11021	Suit Helmet Visual Distortions	APP	APP	
11.1.5	V2 11022	Suit Helmet Displays	APP	APP	
11.1.6	V2 11023	Suit Information Management	APP	APP	X
11.2.1.1	V2 11024	Ability to Work in Suits	APP	APP	
11.2.2.1	V2 11025	Suited Nutrition	APP	APP	X
11.2.3.1	V2 11029	LEA Suited Hydration	N/A	APP	X
11.2.3.2	V2 11030	EVA Suited Hydration	APP	N/A	X
11.2.4.1	V2 11027	Suited Medication Administration	PA	APP	X
11.2.5.1	V2 11031	Suited Relative Humidity	APP	APP	
11.3	V2 11032	LEA Suited Decompression Sickness Prevention Capability	N/A	APP	
11.4	V2 11033	Suited Atmospheric Control	APP	APP	
11.5	V2 11034	Suited Atmospheric Data Recording	APP	APP	X
11.6	V2 11035	Suited Atmospheric Data Displaying	APP	APP	X
11.7	V2 11036	Suited Atmospheric Monitoring and Alerting	APP	APP	X
11.8	V2 11037	Suited Metabolic Rate Measurement	APP	N/A	
11.9	V2 11038	Suited Metabolic Rate Display	APP	N/A	X
11.10	V2 11039	Nominal EVA Spacesuit Carbon Dioxide Levels	APP	APP	
12.1.1	V2 12003	System Assumptions			
12.1.2.1	V2 12004	Anthropometry, Biomechanics, Range of Motion, and Strength			
12.1.2.2	V2 12005	Protective Equipment			
12.1.2.3	V2 12006	Volume Accommodation			
12.1.2.4	V2 12007	Ground Processing – Induced Forces			
12.1.2.5	V2 12008	Systems Accessibility			
12.1.2.6	V2 12009	Tool Clearance			
12.1.3.1	V2 12010	Flight Hardware Differentiation			
12.1.3.2	V2 12011	Hardware Protection			
12.1.3.3	V2 12012	Mobility Aids			
12.1.3.4	V2 12013	Equipment Handling Design			
12.1.3.5	V2 12014	Inadvertent Operation Prevention			
12.1.3.6	V2 12015	Incorrect Installation Prevention			
12.1.3.7	V2 12016	Pre-Defined Tool Set			
12.1.3.8	V2 12017	Captive Fasteners			
12.1.3.9	V2 12018	Ground Processing Without Damage			

Downloaded from http://www.everyspec.com

NASA-STD-3001, Volume 2, Revision B					
Section	Requirement Number	Description	Applicability		
			EVA	LEA	Interfaces
12.1.3.10	V2 12019	Replaceable Items			
12.1.3.11	V2 12020	Visual Access for Ground Processing			
12.1.3.12	V2 12021	Lighting			
12.1.3.13	V2 12022	Supplemental Systems			
12.1.3.14	V2 12023	Operational Consistency			
12.1.3.15	V2 12024	Restraints and Platforms			
12.1.3.16	V2 12025	System Feedback			
12.1.3.17	V2 12026	Stowage Access			
12.1.3.18	V2 12027	Flight Software Systems			
12.1.4.1	V2 12028	Sharp Edge and Burr Injury Prevention			
12.1.4.2	V2 12029	Pinch Point Prevention			
12.1.4.3	V2 12030	Hazard Controls			
12.1.4.4	V2 12031	System Safing for Ground Operations			
12.1.4.5	V2 12032	Contamination Controls			
12.1.4.6	V2 12033	Containment of Fluids and Gases			
12.1.4.7	V2 12034	Safe Weight Limit			
12.1.4.8	V2 12035	Safe Flight System Component Arrangement			
12.1.5.1	V2 12036	Connector Design and Spacing			
12.1.5.2	V2 12037	Connector Incorrect Mating Prevention			
12.1.6.1	V2 12038	Label Provisions			
12.1.6.2	V2 12039	Label Standardization			
12.1.6.3	V2 12040	Label Content			
12.1.6.4	V2 12041	Readable Label Positioning			
12.1.6.5	V2 12042	Non-obstructive Labels			
12.2.1	V2 12043	Emergency Egress at the Launch Site			
12.2.2	V2 12044	Emergency Egress to Medical Care			
12.2.3	V2 12045	Nominal Timely Egress			
12.2.4	V2 12046	Emergency Egress Acceleraton Limits			