Downloaded from http://www.everyspec.com

Langley Research Center

LPR 1710.41
Effective Date: August 4, 2006
Expiration Date: August 4, 2010

LANGLEY RESEARCH CENTER STANDARD FOR THE EVALUATION OF SOCKET AND BRANCH CONNECTION WELDS

National Aeronautics and Space Administration

This Document is Uncontrolled When Printed.
Check the LMS web site to verify that this is the correct version before use.

Downloaded from http://www.everyspec.com

Responsible Office: Safety and Mission Assurance Office

LPR 1710.41

P.1 PURPOSE

This document sets forth the minimum safety procedural requirements for evaluating socket and branch connection welds within the framework of Langley Research Center (LaRC). It provides professional designers and craftsmen a basis for safety and uniformity in the design, fabrication, and inspection of welded piping systems.

P.2 APPLICABILITY

These procedural requirements apply to all persons performing work at LaRC, including civil servants, contractors, research associates, and others. Non-compliance with this LPR will result in appropriate disciplinary action that may include termination for a civil servant employee or exclusion from the Center for a contractor employee, research associate or others.

P.3 AUTHORITY

(a) American Society for Mechanical Engineers (ASME)
(b) American Society for Nondestructive Testing (ASNT)

P.4 REFERENCES

(a) LPR 1710.5, "Ionizing Radiation."
(b) LPR 1710.40, "Langley Research Center Pressure Systems Handbook."
(c) ASME Boiler and Pressure Vessel Code (B&PVC) and B31 Piping Codes
(d) ASNT SNT-TC-1A "Recommended Practice for Nondestructive Testing Personnel Qualification and Certification."
(e) ASME B16.11 "Forged Fittings, Socket Welding and Threaded."
(f) ASME B16.34, "Valves – Flanged, Threaded, and Welding End."
(g) Manufacturers Standardization Society (MSS)-SP-97, "Integrally Reinforced Forged Branch Outlet Fittings, Socket Welding, Threaded, and Butt Welding."

P.5 CANCELLATION

LPR 1710.41, "Langley Research Center Standard for the Evaluation of Socket and Branch Connection Welds." dated April 6, 2005.

Original signed on file

Lesa B. Roe
Director

This Document is Uncontrolled When Printed.
Check the LMS web site to verify that this is the correct version before use.

Downloaded from http://www.everyspec.com

TABLE OF CONTENTS

Chapter **Page**

1. SCOPE 1-1

2. INSPECTION TECHNIQUES 2-1

3. VISUAL INSPECTIONS 3-1
   3.1 METHOD OF INSPECTION 3-1
   3.2 AREA OF INSPECTION 3-1
      3.2.1 Acceptance Criteria for Socket and Branch Connection Welds 3-1
      3.2.2 Inspection Report 3-2

4. RADIOGRAPHIC INSPECTIONS 4-1
   4.1 METHOD OF INSPECTION 4-1
   4.2 PERSONNEL QUALIFICATIONS 4-1
   4.3 SAFETY 4-1
   4.4 SURFACE PREPARATION 4-1
   4.5 DIRECTION OF RADIATION 4-1
   4.6 SHIM BLOCK THICKNESS, SIZE, MATERIAL 4-2
   4.7 PENETRAMETER SELECTION AND ESSENTIAL HOLES 4-2
   4.8 IDENTIFICATION MARKERS 4-2
   4.9 SHIM BLOCK/PENETRAMETER PLACEMENT 4-3
   4.10 RADIOGRAPHIC DENSITY 4-3
   4.11 SOURCE STRENGTH 4-3
   4.12 SCATTERED RADIATION 4-3
   4.13 QUALITY OF RADIOGRAPHS 4-3
   4.14 GEOMETRIC UNSHARPNESS/SOURCE-TO-FILM DISTANCE 4-4
   4.15 ACCEPTANCE CRITERIA FOR SOCKET AND BRANCH CONNECTION WELDS 4-4
   4.16 RADIOGRAPHIC TECHNICAL LOG AND INTERPRETATION REPORT 4-5

5. MAGNETIC PARTICLE/DYE PENETRANT INSPECTIONS 1
   5.1 GENERAL 1
   5.2 INSPECTION TECHNIQUES 1
   5.3 ACCEPTANCE CRITERIA FOR SOCKET AND BRANCH CONNECTION WELDS 1
   5.4 INSPECTION REPORT 2

This Document is Uncontrolled When Printed.
Check the LMS web site to verify that this is the correct version before use.

Downloaded from http://www.everyspec.com

LIST OF FIGURES

Page

FIGURE A-1, NOMENCLATURE AND MINIMUM DIMENSIONS FOR SOCKET WELD COMPONENTS OTHER THAN FLANGES A-2
FIGURE A-2, UNACCEPTABLE SOCKET WELD FILLET SIZES FOR COMPONENTS OTHER THAN FLANGES A-3
FIGURE A-3, CRACKS - VISUAL INSPECTION A-4
FIGURE A-4, INCOMPLETE FUSION - VISUAL INSPECTION A-5
FIGURE A-5, UNDERCUT A-6
FIGURE A-6, SURFACE SLAG AND POROSITY A-7
FIGURE A-7, RADIOGRAPHIC EXPOSURE TECHNIQUE A-8
FIGURE A-8, CRACKS – RADIOGRAPHIC INSPECTION A-9
FIGURE A-9, INCOMPLETE PENETRATION A-10
FIGURE A-10, INCOMPLETE FUSION – RADIOGRAPHIC INSPECTION A-11
FIGURE A-11, UNACCEPTABLE PIPE-TO-SOCKET GAP A-12
FIGURE A-12, POROSITY AND ROUNDED INDICATIONS A-13
FIGURE A-13, SLAG INCLUSIONS A-14
FIGURE A-14, MELT THROUGH A-15
FIGURE A-15, WELD NOMENCLATURE AND MINIMUM DIMENSIONS FOR BRANCH CONNECTION WELDS A-16
FIGURE A-16, RADIOGRAPHIC EXPOSURE TECHNIQUE (BRANCH) A-17
FIGURE A-17, INCOMPLETE PENETRATION (BRANCH) A-18

This Document is Uncontrolled When Printed.
Check the LMS web site to verify that this is the correct version before use.

Downloaded from http://www.everyspec.com

Chapter 1

1. SCOPE

This procedural requirement shall be used for the nondestructive evaluation of socket and branch connection welds at LaRC. Socket fittings include, but are not limited to, all common pipe fittings - tees, elbows, couplings, caps, flanges, unions, and valves meeting the requirements of ASME B16.11 “Forged Fittings, Socket Welding and Threaded” and ASME B16.34, “Valves – Flanged, Threaded, and Welding End”. Branch connections are defined as Weld-O-Let, Sock-O-Let, Thread-O-Let, or other similar commercial fittings made in accordance with MSS-SP-97, “Integrally Reinforced Forged Branch Outlet Fittings, Socket Welding, Threaded, and Butt Welding”, and include modified components such as couplings.

In addition, the exterior weld of slip-on flanges may be inspected using this standard.

This Document is Uncontrolled When Printed.
Check the LMS web site to verify that this is the correct version before use.

Downloaded from http://www.everyspec.com

Chapter 2

2. INSPECTION TECHNIQUES

Four nondestructive evaluation techniques are available to be used exclusively, or in combination, to inspect socket type and branch connection welds. These techniques are visual external examination (VE), radiographic examination (RT), magnetic particle examination (MT), and dye penetrant examination (PT). Under special circumstances, other techniques (such as eddy current examination or ultrasonic examination) may be required and their application shall be guided by the appropriate sections of the American Society of Mechanical Engineers (ASME) Boiler and Pressure Vessel Code (B&PVC).

This Document is Uncontrolled When Printed.
Check the LMS web site to verify that this is the correct version before use.

Downloaded from http://www.everyspec.com

3. VISUAL EXTERNAL INSPECTIONS

3.1 METHOD OF INSPECTION

Socket and branch connection welds shall be inspected for surface defects using visual external techniques.

3.2 AREA OF INSPECTION

Visual external inspections within the scope of this procedural requirement shall be restricted to the weld contour and adjacent pipe and fitting surfaces. Inspections shall be conducted in accordance with the most current editions of the American National Standard Institute (ANSI)/ASME Code B31.3, and the ASME B&PVC, Section V, Article 9, with the following modifications:

- Inspection personnel shall be currently certified under a plan based on the American Society for Nondestructive Testing (ASNT) recommended practice SNT-TC-1A "Recommended Practice for Nondestructive Testing Personnel Qualification and Certification" to a minimum qualification of Level II.
- Inspectors shall have successfully passed an eye examination to demonstrate near distance acuity such as the J-2 letters on a standard Jaeger Test Chart. Eye examinations are required as follows:
  - Under age 35, every 12 months.
  - Over age 35, every 6 months.

Unless otherwise specified, all welds shall be contour ground and free of rust, scale, slag, or other conditions that would obscure the surface condition.

3.3 ACCEPTANCE CRITERIA FOR VISUAL EXAMINATION OF SOCKET AND BRANCH CONNECTION WELDS

Weld fillets shall comply with the requirements of the current edition of ANSI B31.3. In lieu of a specified pressure design thickness "t", the nominal pipe wall thickness "T_W" shall be substituted. (See Appendix, Figures A-1 and A-2.)

The weld surface and adjacent base metal shall be free of cracks, incomplete fusion (IF), arc strikes, weld spatter, gouges, mishandling marks, and other sharp surface irregularities.

The weld fillet shall blend uniformly into the pipe wall and fitting rim. The undercut shall not exceed the lesser of 1/32 inch or Tw/4 (Tw = nominal pipe wall thickness).

Surface porosity and/or slag is not permitted. (See Appendix, Figures A-3 through A-6 for examples of these irregularities.)

This Document is Uncontrolled When Printed.
Check the LMS web site to verify that this is the correct version before use.

Downloaded from http://www.everyspec.com

Unless otherwise specified, axial misalignment between the pipe and fitting shall not exceed 5°.

3.4 INSPECTION REPORT

Upon completion of visual inspections, the inspecting organization shall furnish a report containing, as a minimum, the following information:

- System identification,
- Drawing number,
- Location,
- Sketch or description of each component/weld,
- Material type,
- Surface condition,
- Discrepancies noted,
- Inspector's name,
- Inspection data, and
- Contract number.

This Document is Uncontrolled When Printed.
Check the LMS web site to verify that this is the correct version before use.

Downloaded from http://www.everyspec.com

Chapter 4

4. RADIOGRAPHIC INSPECTIONS

4.1 METHOD OF INSPECTION

Socket and branch connection weld joints shall be inspected for defects using radiographic techniques. These radiographic inspections shall be conducted in accordance with the most current edition of the ASME B&PVC, Section V, Article 2, as modified by the following paragraphs. Any item not specifically addressed herein will revert to the provisions of ASME B&PVC Section V.

4.2 PERSONNEL QUALIFICATIONS

All inspection personnel shall be qualified in accordance with ASNT SNT-TC-1A. Personnel qualified to Level I shall be used only under the field supervision of Level II or Level III inspectors. In addition to the above requirement, radiographic interpreters shall have demonstrated near distance acuity as specified under Chapter 3, Paragraph 3.2 of this handbook and shall be familiar with weld fabrication techniques.

4.3 SAFETY

All radiographic inspection operations conducted at LARC shall be in accordance with applicable Nuclear Regulatory Commission (NRC) regulations and shall, in addition, be in compliance with LPR 1710.5, "Ionizing Radiation."

4.4 SURFACE PREPARATION

Unless otherwise specified, all welds shall be contour ground and free of surface irregularities which could mask or be confused with discontinuities.

4.5 DIRECTION OF RADIATION

Each socket weld exposure setup shall be aligned so as to pass the radiation central ray parallel to and in line with the socket rim. (See Appendix, Figure A-7.)

Each branch connection weld exposure setup shall be aligned so as to pass the radiation central ray in a tangent to the run pipe external surface. Two views shall be imaged as follows (see Appendix, Figure A-16):

- View 0 - with the central ray perpendicular to the run pipe axis.
- View 1 - with the central ray offset 25-35 degrees from View 0.

This Document is Uncontrolled When Printed.
Check the LMS web site to verify that this is the correct version before use.

Downloaded from http://www.everyspec.com

NOTE
Branch connections over 6 inches in diameter (O.D.) may require additional exposures or alternate techniques at the discretion of the NASA-NDE Radiograph Interpreter.

These requirements may, at the discretion of the NASA NDE Radiograph interpreter, be relaxed to allow the simultaneous exposure of closely spaced weld joints. Three views of each weld joint taken at 60° to each other is the minimum acceptable coverage for pipe having a nominal size greater than 1 inch. For pipe having a nominal size of 1 inch or less, two views of each weld joint taken at 90° to each other is the minimum acceptable coverage. (See Appendix, Figure A-7.)

4.6 SHIM BLOCK THICKNESS, SIZE, MATERIAL

The shim block thickness shall be established for each joint by using the following formulas:

For socket: $2Tw + R$
For branch: $2T_f + R$

where:
T_f = the nominal fitting single wail thickness.
Tw = the nominal pipe single wall thickness.
R = the component of weld reinforcement measured perpendicular to the pipe axis at the fitting edge rim. (See Appendix, Figure A-1 for socket welds and Figure A-15 for branch connection welds.)

The shim block shall be of sufficient size to allow placement of a penetrameter and identification markers. Shim material shall be radiographically similar to the subject weld/pipe material.

4.7 PENETRAMETER SELECTION AND ESSENTIAL HOLES

The penetrameter selection shall be based on the calculated shim thickness as follows:

SHIM THICKNESS (2TW + R) OR (2Tf + R)	PENETRAMETER	ESSENTIAL HOLE
0 thru 0.375	10	4t
Over 0.375 thru 0.625	12	4t
Over 0.625 thru 0.875	15	4t
Over 0.875 thru 1.00	17	4t
Over 1.00 thru 1.50	25	2t
Over 1.50 thru 2.00	30	2t
Over 2.00 thru 2.50	35	2t

4.8 IDENTIFICATION MARKERS

Weld numbers shall be permanently marked on each inspected joint. If the radiographic view depicts more than one weld joint, identification numbers shall be included in the

This Document is Uncontrolled When Printed.
Check the LMS web site to verify that this is the correct version before use.

Downloaded from http://www.everyspec.com

image to positively identify each weld. Film printer identification techniques are prohibited. Each radiograph shall, as a minimum, have the following information permanently included in its image:

- Weld number,
- View number,
- NASA Quality Assurance (QA) or contract number,
- Radiographic contractor identification,
- Date of exposure, and
- NASA drawing number.

4.9 SHIM BLOCK/PENETRAMETER PLACEMENT

The shim block with identification numbers and penetrameter shall be aligned parallel to the subject pipe axis with the penetrameter center adjacent to the socket rim. (See Appendix, Figure A-7 for socket welds and Figure A-16 for branch connection welds.)

4.10 RADIOGRAPHIC DENSITY

The calculated shim thickness from Chapter 4.6 shall be used to determine exposure values. Film image density shall be measured through the shim block/penetrameter combination and shall equal 3.0 ± 0.5. (See Appendix, Figure A-7.)

4.11 SOURCE STRENGTH

Unless otherwise specified, the radiation source energy shall be equal to or greater than 35 curies from IR 192 and 150 KEV for x-ray machines.

4.12 SCATTERED RADIATION

To minimize the effect of back scatter radiation, all film cassettes shall be backed up with a minimum of 1/16 inch-thick lead sheeting. This sheeting shall be at sufficient size to completely cover the cassette and shall be covered with tape to prevent lead smearing. (See Appendix, Figure A-7 for socket welds and Figure A-16 for branch connection welds.)

4.13 QUALITY OF RADIOGRAPHS

All radiographs shall be free of mechanical, chemical, or other blemishes which could mask the image of any discontinuity within the area of interest. Such blemishes include, but are not limited to:

- Fogging,
- Processing defects such as streaks, water marks, or chemical stains,
- Scratches, finger marks, crimps, dirt, static marks, smudges, or tears,
- Loss of detail due to poor screen-to-film contact, and
- False indications due to defective screens or cassette faults.

This Document is Uncontrolled When Printed.
Check the LMS web site to verify that this is the correct version before use.

Downloaded from http://www.everyspec.com

4.14 GEOMETRIC UNSHARPNESS/SOURCE-TO-FILM DISTANCE

Geometric unsharpness of the radiographic image shall not exceed 0.020 inch. The radiation source-to-film distance, unless otherwise specified by the NASA NDE Radiograph interpreter, shall be not less than 14 inches.

4.15 ACCEPTANCE CRITERIA FOR RADIOGRAPHIC EXAMINATION OF SOCKET AND BRANCH CONNECTION WELDS

The following acceptance criteria apply:

- Cracks of any nature or extent are not acceptable. (See Appendix, Figure A-8.)
- Incomplete penetration (IP) as follows is not acceptable:
  - Socket: The failure of weld material to extend completely into and become integral with the intersection of socket rim inner diameter and cylindrical pipe wall. (See Appendix, Figure A-9.)
  - Branch: The failure of the weld material to: (a) extend completely to the inner surface of the fitting and (b) become integral with both the pipe and the fitting. (See Appendix, Figure A-17.)
- Incomplete Fusion (IF), an isolated, discontinuous or continuous area of no weld material fusion at the weld-socket, weld-pipe interface, or between consecutive weld passes, is not acceptable. (See Appendix, Figure A-10.)
- For socket welds only, a gap of 1/1 6 inch ± 1/32 inch shall be maintained between the pipe end and socket bottom after welding. (See Appendix, Figures A-1 and A-11.)
- An individual porosity defect or rounded indication shall not exceed the lesser of Tw/3 or 1/8 inch in its greater dimensions. Adjacent indications shall be separated by a minimum Tw/2 of sound weld. The summation of diameters for aligned rounded indications shall not exceed Tw in length for any 6 Tw of weld. (See Appendix, Figure A-12.)
- Slag inclusions/elongated defects requirements are as follows:
  - The developed length of any single slag inclusion or elongated defect shall not exceed Tw/3.
  - Adjacent slag inclusions shall be separated by a minimum Tw/2 sound weld.
  - The total cumulative developed length of slag inclusions and/or elongated defects shall not exceed Tw in any 6 Tw of weld.
  - The width of a slag inclusion shall not exceed the lesser of 3/32 inch or Tw/3.
  - Slag inclusions or elongated defects that infringe upon the root area are not acceptable to any extent. (See Appendix, Figure A-13.)
- Melt through, a localized area of pipe metal melting and resolidification usually located on the pipe inner diameter, shall be reviewed on an individual case basis and shall not:
  - Reduce the nominal pipe wall thickness greater than 12-1/2%.
  - Present unacceptable internal flow restrictions as determined by the Standard Practice Engineer.

This Document is Uncontrolled When Printed.
Check the LMS web site to verify that this is the correct version before use.

Downloaded from http://www.everyspec.com

  - Include icicle type areas which could become dislodged. (See Appendix, Figure A-14.)
- Burn through shall not reduce the nominal pipe wall thickness greater than 12-1/2%.

4.16 RADIOGRAPHIC TECHNICAL LOG AND INTERPRETATION REPORT

The radiographer shall furnish, in addition to the radiographic film, a technical log and interpretation report relative to each inspected weld. The log/report shall contain, as a minimum, the following data:

- System identification;
- Drawing number;
- Location;
- Sketch or description of each component/weld;
- Material type;
- Pipe nominal wall thickness Tw and fitting nominal wall thickness Tf;
- Weld thickness R;
- Shim block thickness - 2Tw + R or 2Tf + R;
- Penetrameter size/essential hole;
- Isotope or x-ray machine, size/type/energy;
- Film type/manufacturer;
- Screen type, thickness, placement;
- Source-to-film distance;
- Exposure time/milliamp-minutes (MAM);
- Radiographer's name;
- Inspection date;
- Discrepancies noted;
- Interpreter's name; and
- Interpretation date.

This Document is Uncontrolled When Printed.
Check the LMS web site to verify that this is the correct version before use.

Downloaded from http://www.everyspec.com

Chapter 5

5. MAGNETIC PARTICLE/DYE PENETRANT INSPECTIONS

5.1 GENERAL

Socket and branch connection weld joints shall be inspected for surface defects utilizing magnetic particle or dye penetrant techniques, as applicable. This work shall be conducted in accordance with the ASME B&PVC, Section V, Article 7, for magnetic particle and Article 6 for dye penetrant, with the following modifications.

Inspection personnel shall be qualified in accordance with ASNT-SNT-TC-IA. Personnel qualified to Level I shall be used only under the field supervision of Level II or Level III inspectors.

Weld joint surfaces and adjacent areas (within a minimum of 1 inch on each side of weld) shall be free of any irregularities which could mask indications. Prior to inspection, these areas shall be dry and free of all paint, dirt, grease, lint, scale, welding flux, and splatter, oil or other extraneous matter that could interfere with the examination.

5.2 INSPECTION TECHNIQUES

The following are the two weld joint inspection techniques:

- Magnetic particle technique:
  - The inspector has the option of using a coil encirclement or yoke magnetization technique.
  - Magnetizing field adequacy shall be verified using a magnetic particle field indicator as illustrated in ASME B&PVC, Section V, Article 7. This verification shall be conducted at the beginning of each period of work or shift change and as a minimum every 4 hours during the work period.
  - All surface areas of: (a) the weld and (b) the adjacent pipe and fitting material (for a minimum of 1 inch on each side of the weld) shall be 100% inspected.
- Dye penetrant technique:
  - Unless otherwise specified, dwell time shall be not less than 10 minutes.
  - When the surface temperature of the area to be inspected is outside of the 60° F to 125° F range, the testing procedure shall be qualified as per the requirements of ASME B&PVC, Section V, Article 6.

5.3 ACCEPTANCE CRITERIA FOR MAGNETIC PARTICLE AND DYE PENETRANT EXAMINATION OF SOCKET AND BRANCH CONNECTION WELDS

The following weld defects shall constitute rejectable conditions:

- Cracks,
- Incomplete fusion(IF), and
- Surface open slag or porosity.

This Document is Uncontrolled When Printed.
Check the LMS web site to verify that this is the correct version before use.

Downloaded from http://www.everyspec.com

5.4 INSPECTION REPORT

Upon completion of magnetic particle and/or dye penetrant inspections, the inspector shall furnish a report containing, as a minimum, the following information:

- System identification;
- Drawing number;
- Location;
- Description or sketch of inspected item;
- If dye penetrant technique, then include:
  - Penetrant type/manufacturer,
  - Part temperature,
  - Dwell time,
  - Cleaning method, and
  - Development method;
- If magnetic particle technique, then include:
  - Magnetization method,
  - Equipment manufacturer,
  - Magnetization current (AC or DC),
  - Magnetization current strength (amps),
  - Power type/manufacturer;
- Discrepancies noted;
- Inspector's name; and
- Date of inspection.

This Document is Uncontrolled When Printed.
Check the LMS web site to verify that this is the correct version before use.

Downloaded from http://www.everyspec.com

A. FIGURES

This Document is Uncontrolled When Printed.
Check the LMS web site to verify that this is the correct version before use.

Downloaded from http://www.everyspec.com

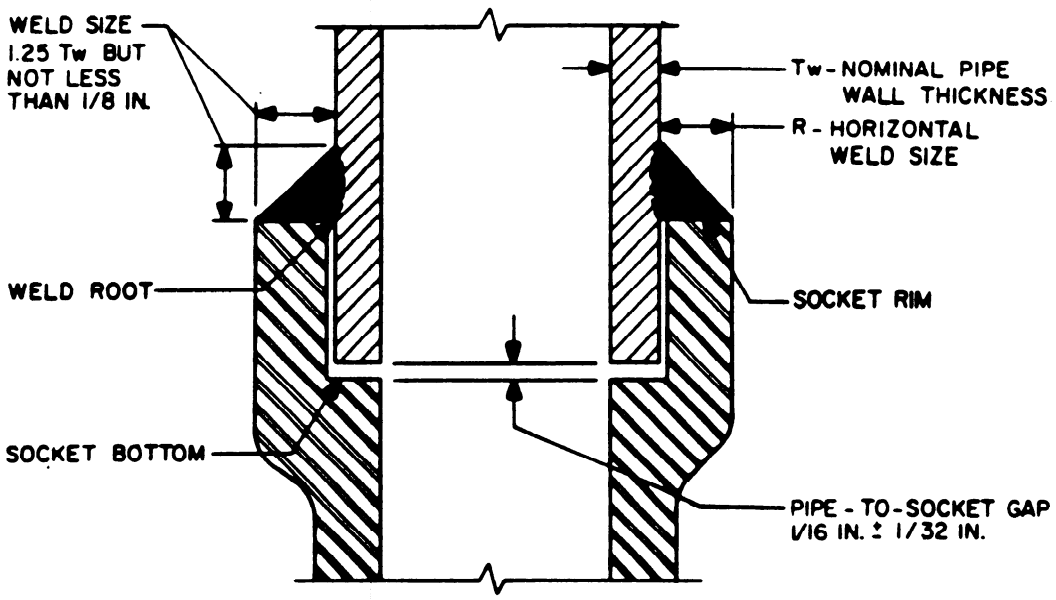

Figure A-1, Weld Nomenclature and Minimum Dimensions for Socket Weld Components Other Than Flanges.

This Document is Uncontrolled When Printed.
Check the LMS web site to verify that this is the correct version before use.

Downloaded from http://www.everyspec.com

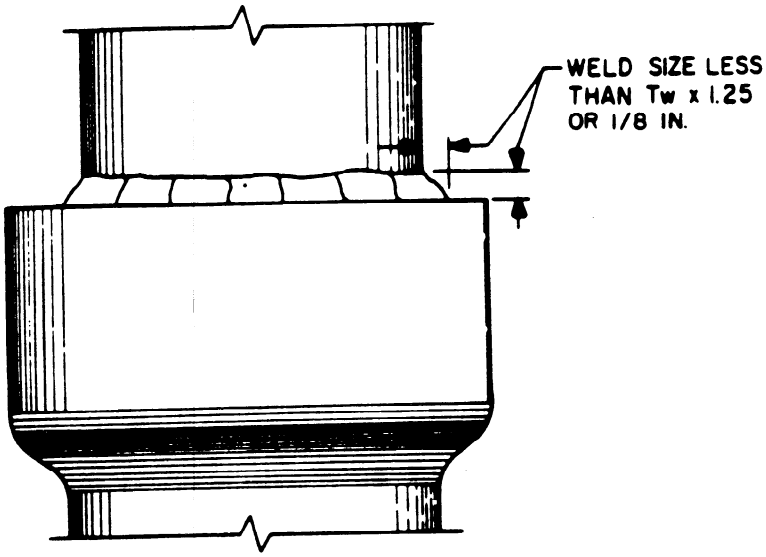

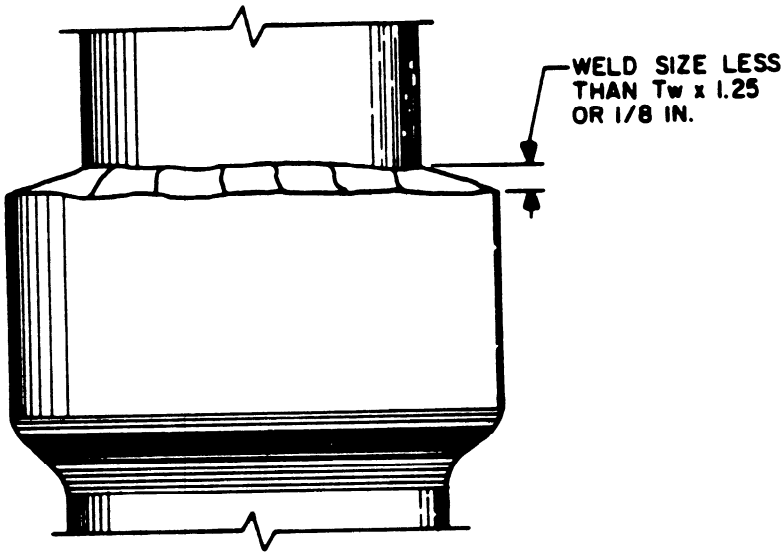

Figure A-2, Unacceptable Socket Weld Fillet Sizes for Components Other Than Flanges.

This Document is Uncontrolled When Printed.
Check the LMS web site to verify that this is the correct version before use.

Downloaded from http://www.everyspec.com

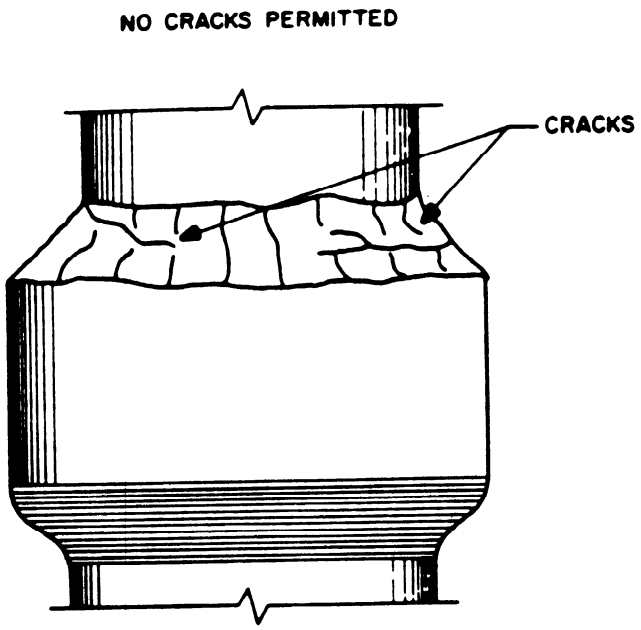

Figure A-3, Cracks - Visual Inspection.

This Document is Uncontrolled When Printed.
Check the LMS web site to verify that this is the correct version before use.

Downloaded from http://www.everyspec.com

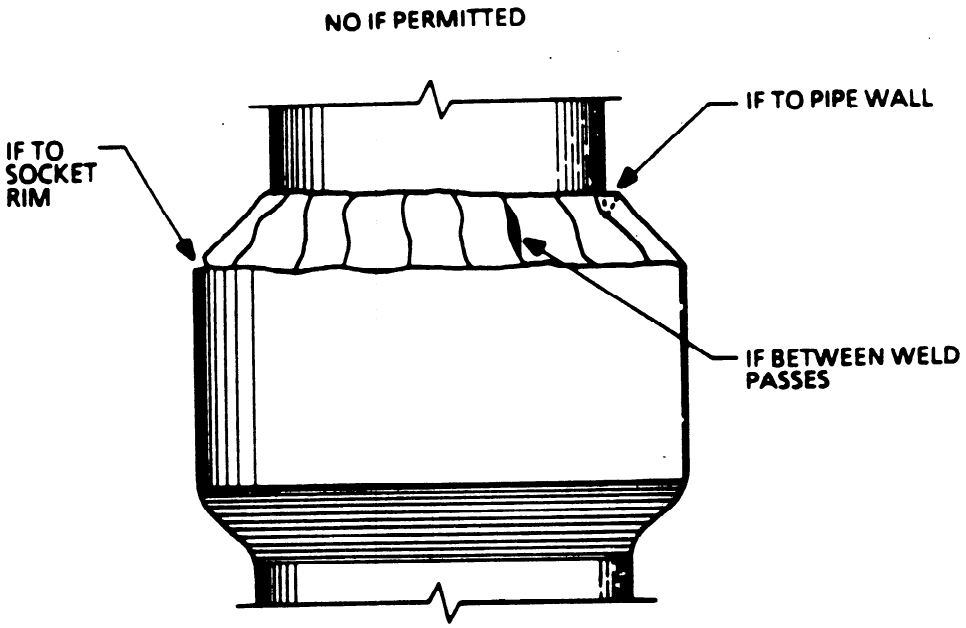

Figure A-4, Incomplete Fusion - Visual Inspection.

This Document is Uncontrolled When Printed.
Check the LMS web site to verify that this is the correct version before use.

Downloaded from http://www.everyspec.com

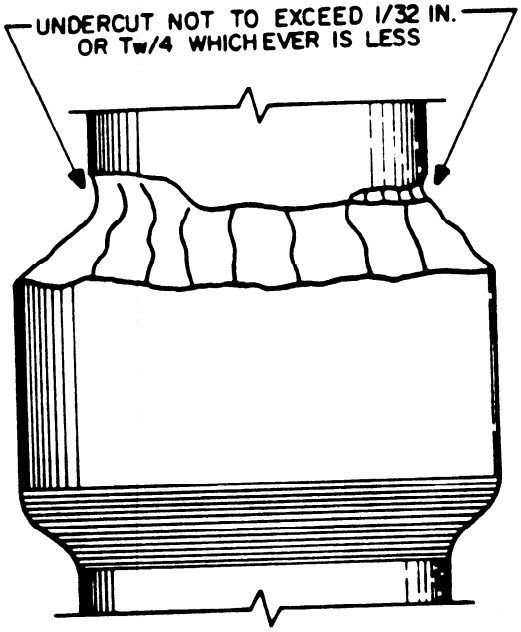

Figure A-5, Undercut.

This Document is Uncontrolled When Printed.
Check the LMS web site to verify that this is the correct version before use.

Downloaded from http://www.everyspec.com

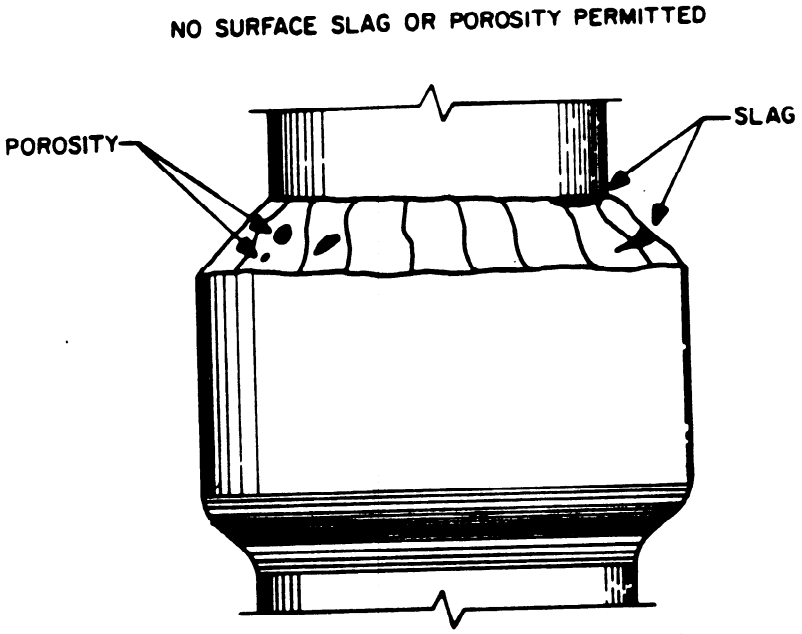

Figure A-6, Surface Slag and Porosity.

This Document is Uncontrolled When Printed.
Check the LMS web site to verify that this is the correct version before use.

Downloaded from http://www.everyspec.com

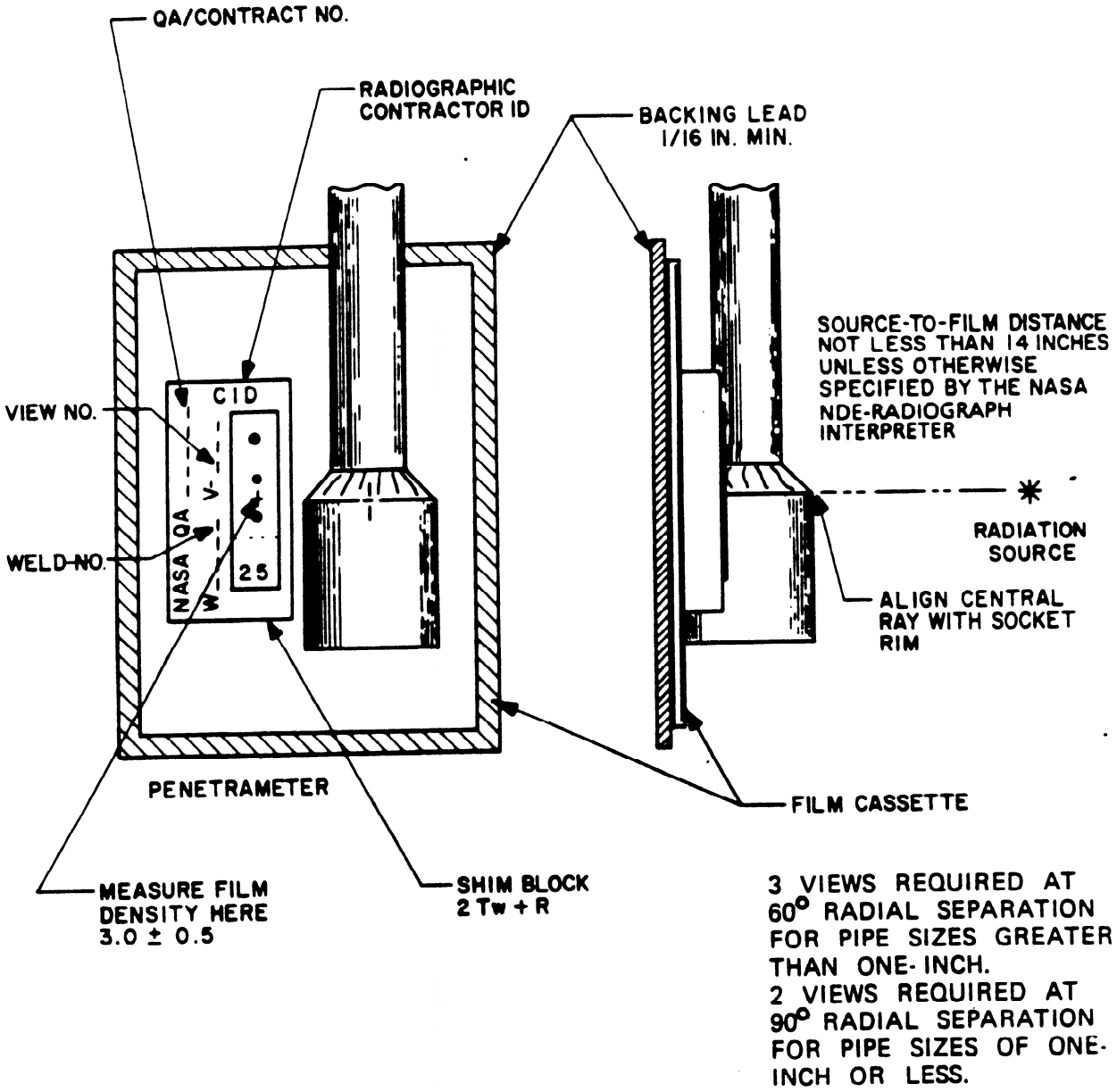

Figure A-7, Radiographic Exposure Technique.

This Document is Uncontrolled When Printed.
Check the LMS web site to verify that this is the correct version before use.

Downloaded from http://www.everyspec.com

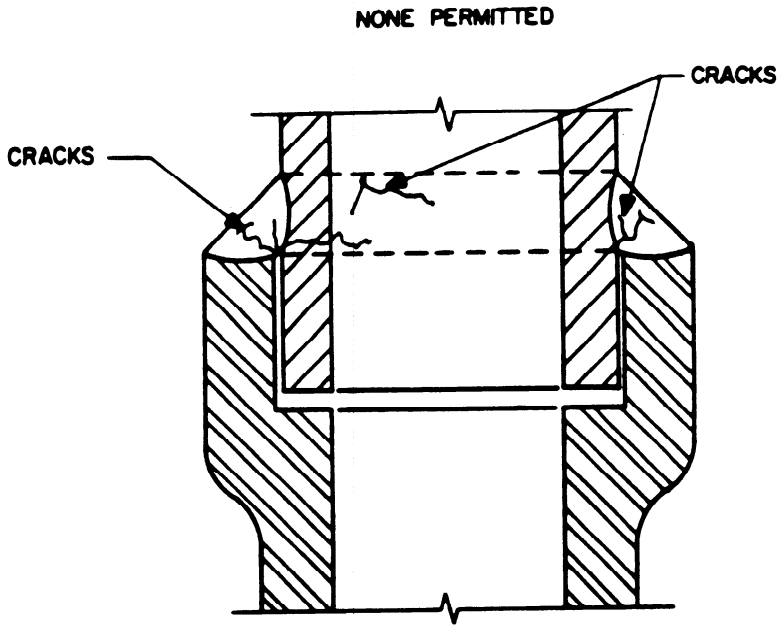

Figure A-8, Cracks – Radiographic Inspection.

This Document is Uncontrolled When Printed.
Check the LMS web site to verify that this is the correct version before use.

Downloaded from http://www.everyspec.com

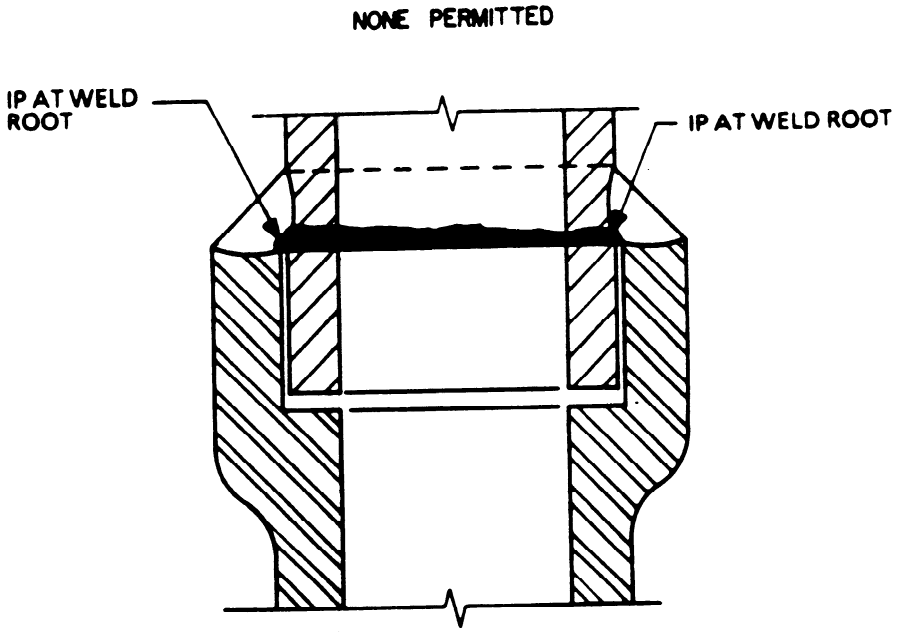

Figure A-9, Incomplete Penetration.

This Document is Uncontrolled When Printed.
Check the LMS web site to verify that this is the correct version before use.

Downloaded from http://www.everyspec.com

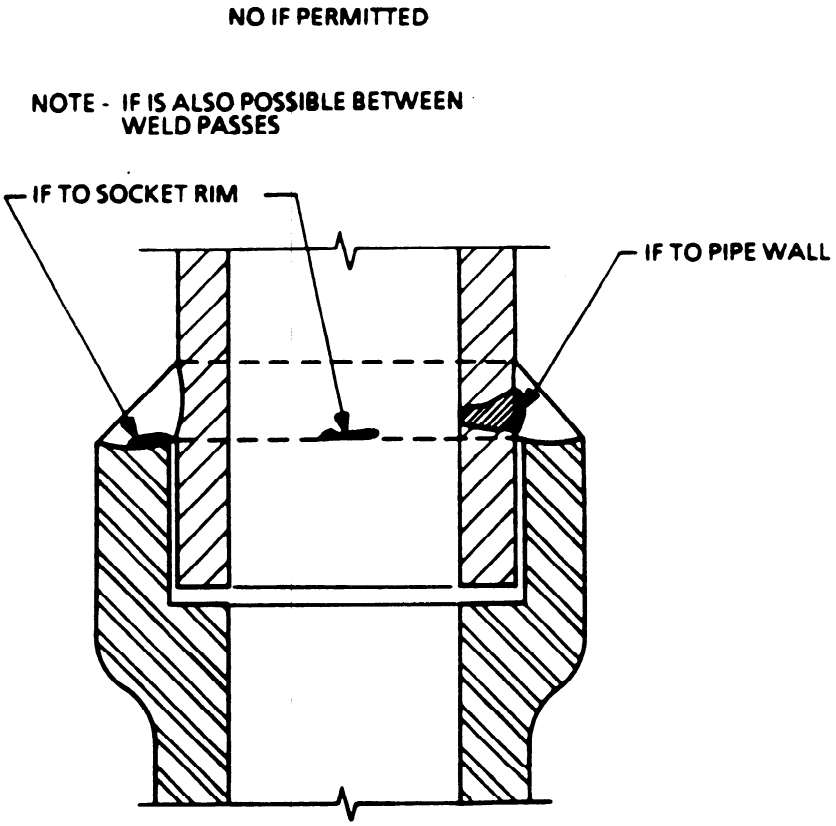

Figure A-10, Incomplete Fusion – Radiographic Inspection.

This Document is Uncontrolled When Printed.
Check the LMS web site to verify that this is the correct version before use.

Downloaded from http://www.everyspec.com

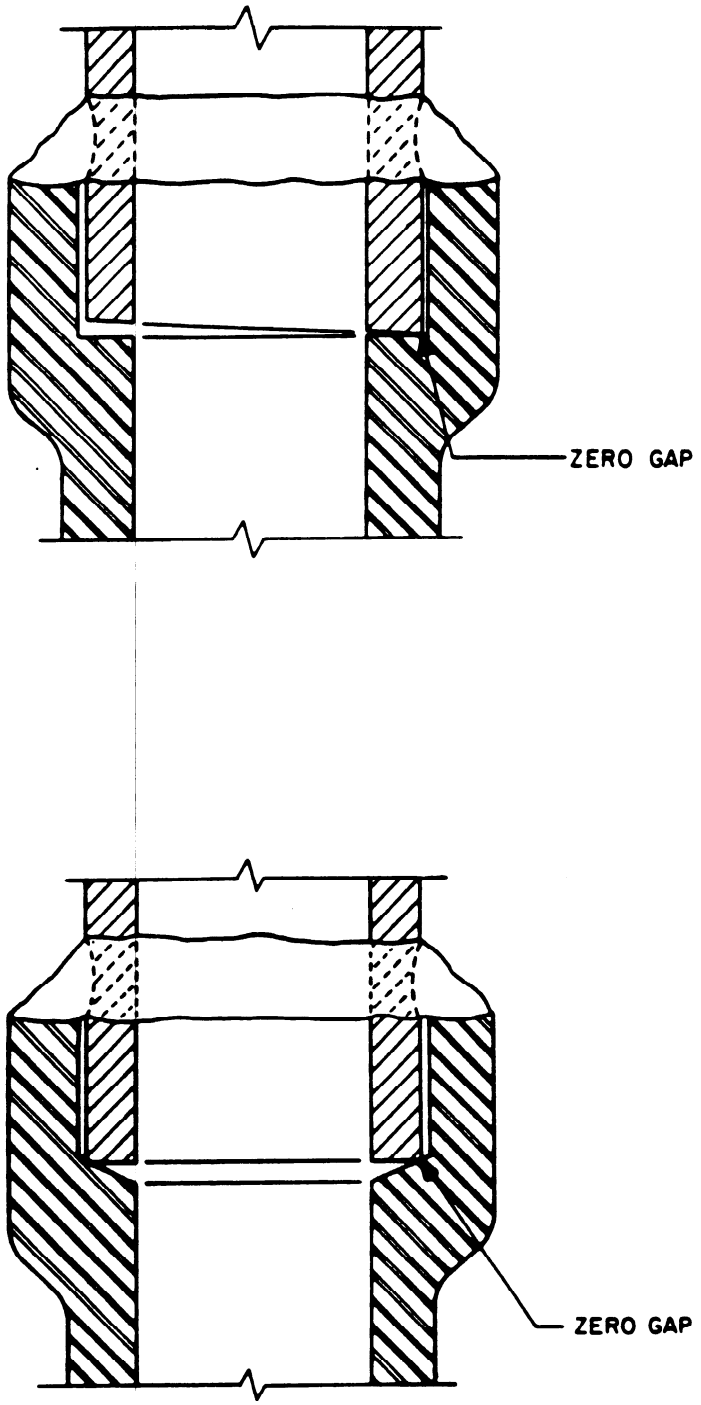

Figure A-11, Unacceptable Pipe-To-Socket Gap.

This Document is Uncontrolled When Printed.
Check the LMS web site to verify that this is the correct version before use.

Downloaded from http://www.everyspec.com

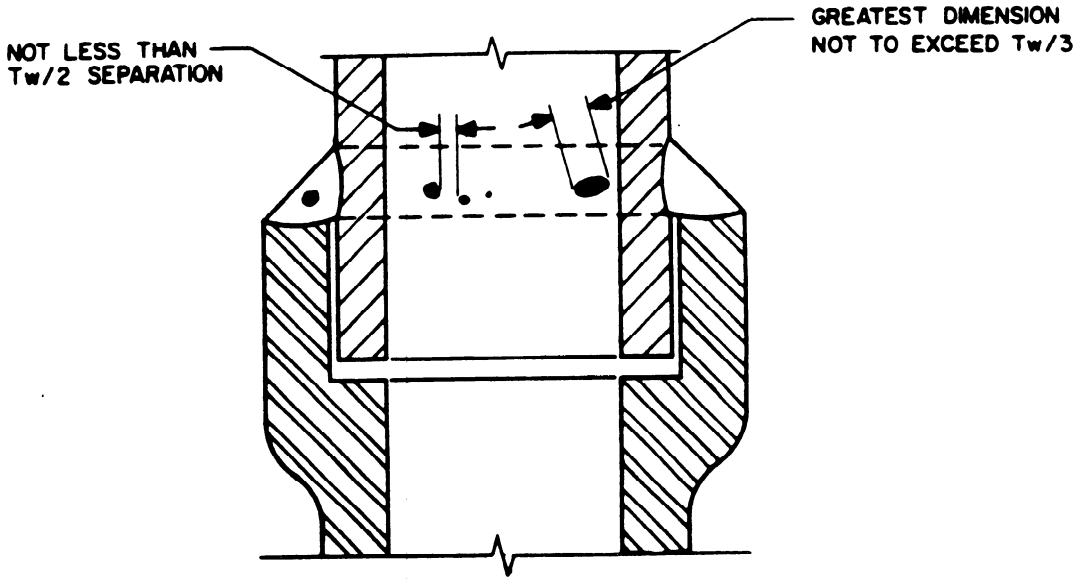

Figure A-12, Porosity and Rounded Indications.

This Document is Uncontrolled When Printed.
Check the LMS web site to verify that this is the correct version before use.

Downloaded from http://www.everyspec.com

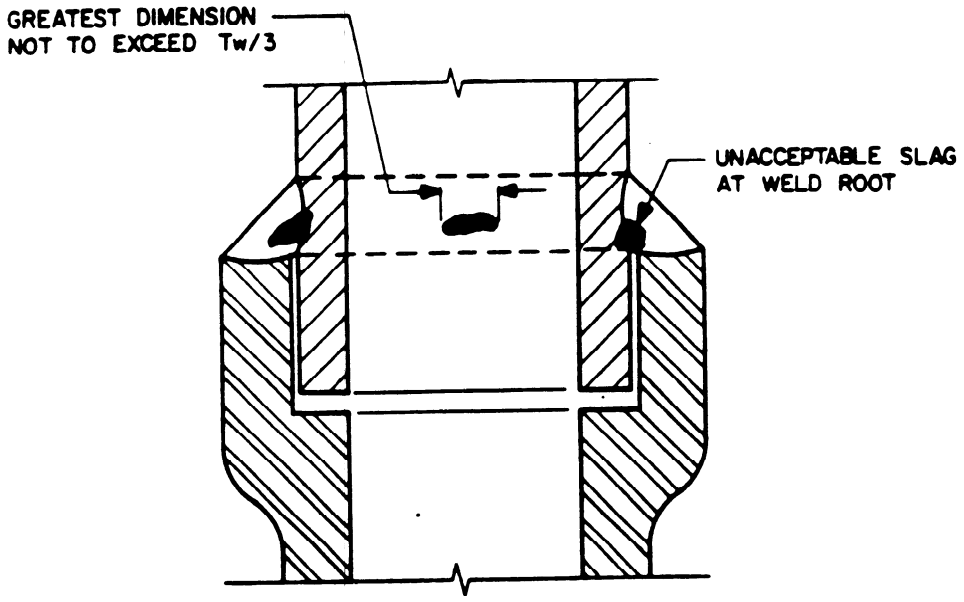

Figure A-13, Slag Inclusions.

This Document is Uncontrolled When Printed.
Check the LMS web site to verify that this is the correct version before use.

Downloaded from http://www.everyspec.com

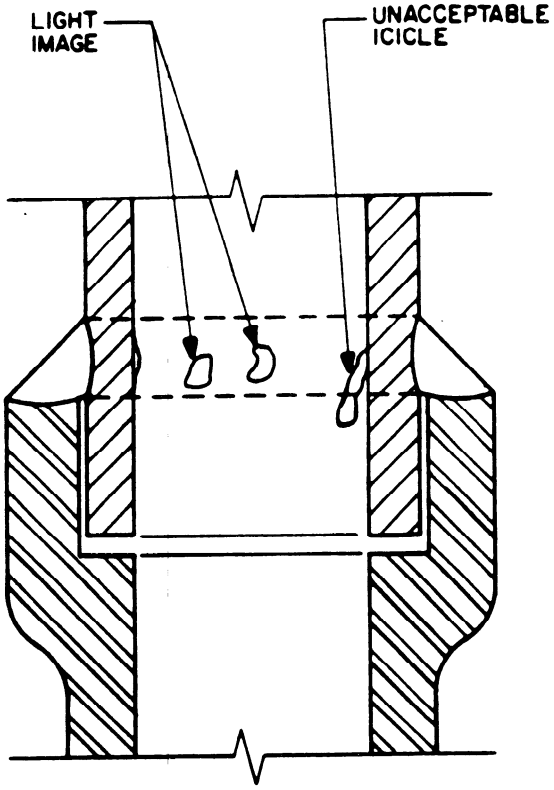

Figure A-14, Melt Through.

This Document is Uncontrolled When Printed.
Check the LMS web site to verify that this is the correct version before use.

Downloaded from http://www.everyspec.com

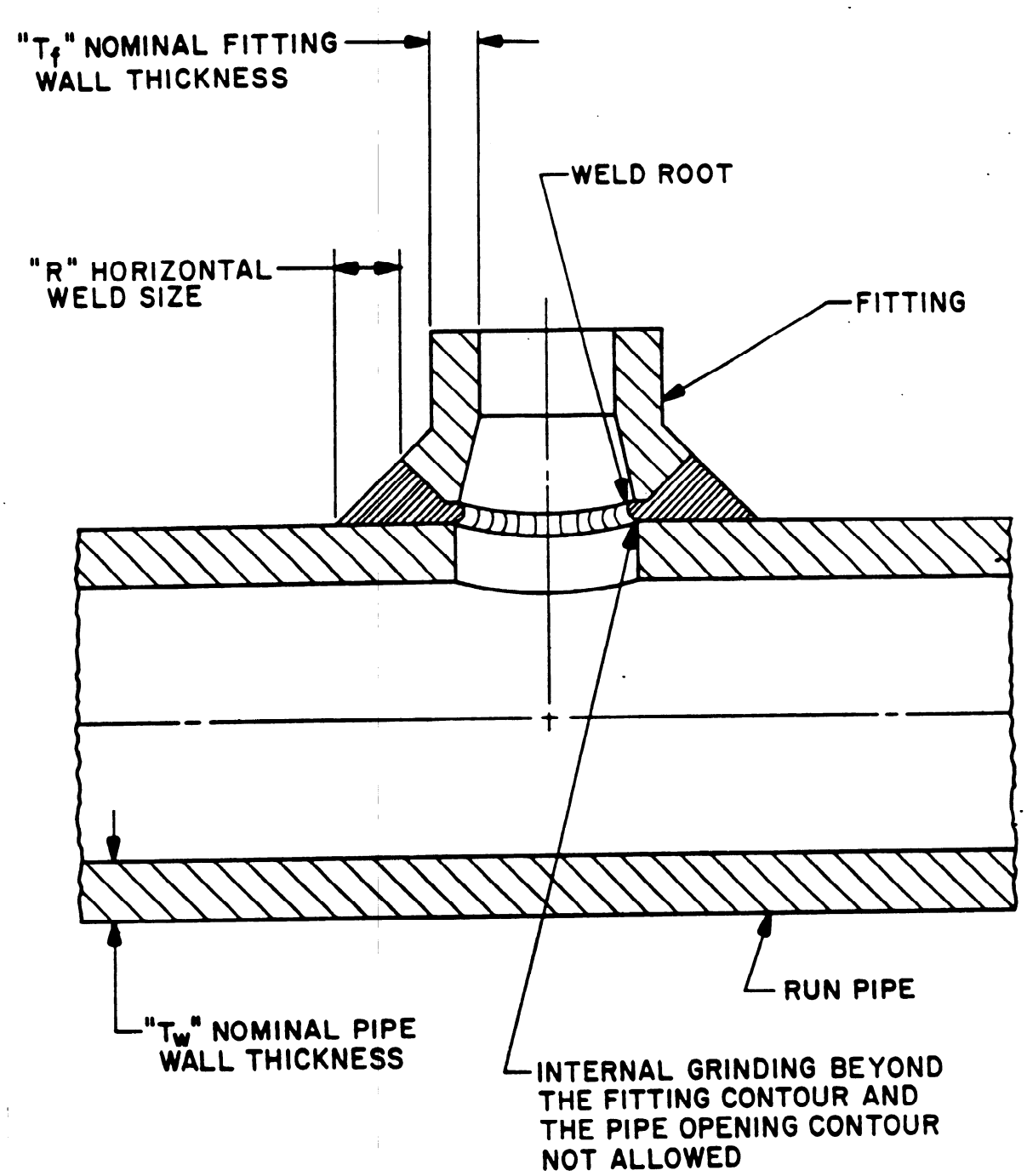

Figure A-15, Weld Nomenclature and Minimum Dimensions for Branch Connection Welds.

This Document is Uncontrolled When Printed.
Check the LMS web site to verify that this is the correct version before use.

Downloaded from http://www.everyspec.com

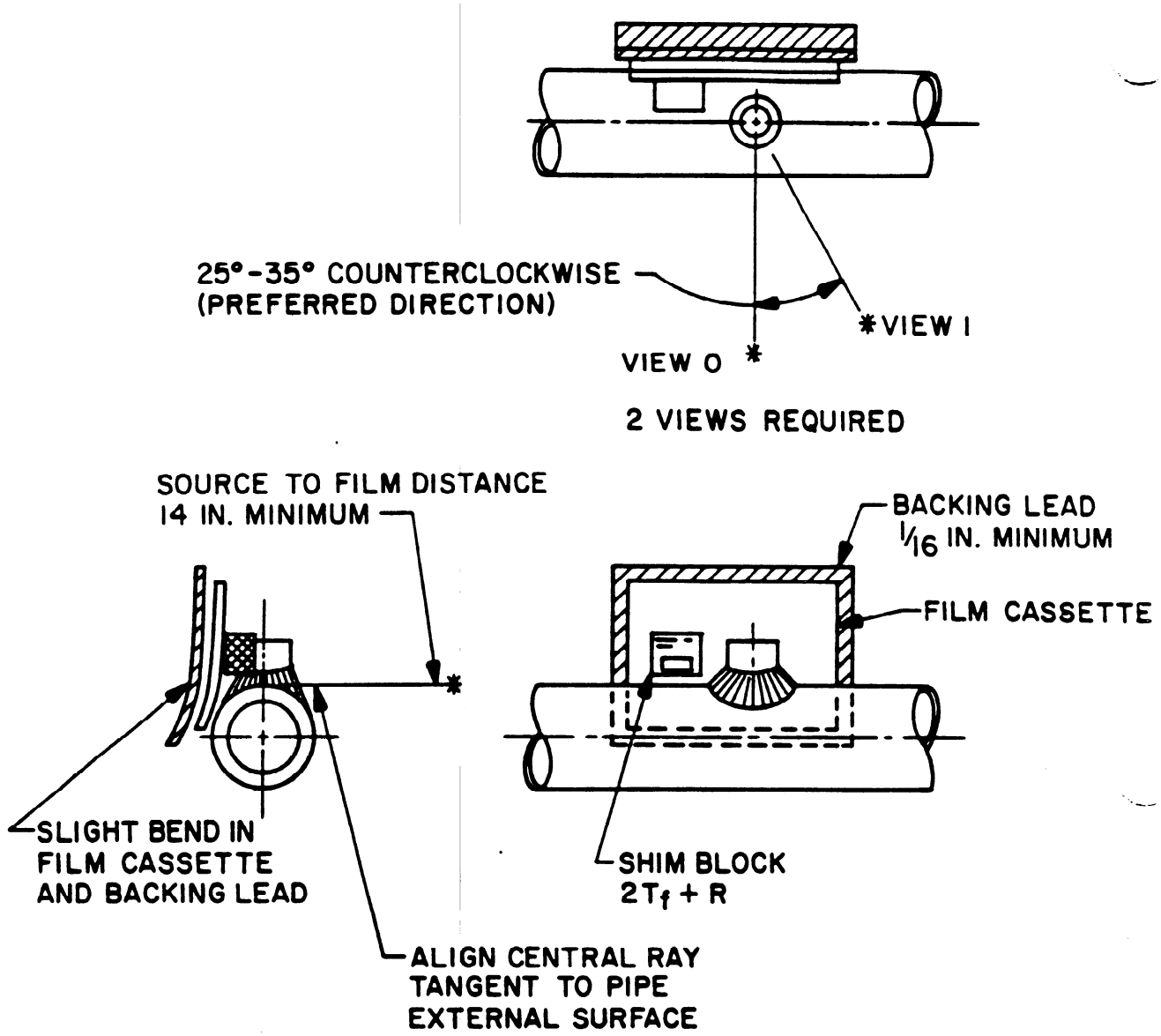

NOTE

BRANCH CONNECTIONS OVER 6 INCHES DIAMETER (O.D.) MAY REQUIRE ADDITIONAL EXPOSURES OR ALTERNATE TECHNIQUES AT THE DISCRETION OF THE NASA NDE RADIOGRAPH INTERPRETER

Figure A-16, Radiographic Exposure Technique (Branch).

This Document is Uncontrolled When Printed.
Check the LMS web site to verify that this is the correct version before use.

Downloaded from http://www.everyspec.com

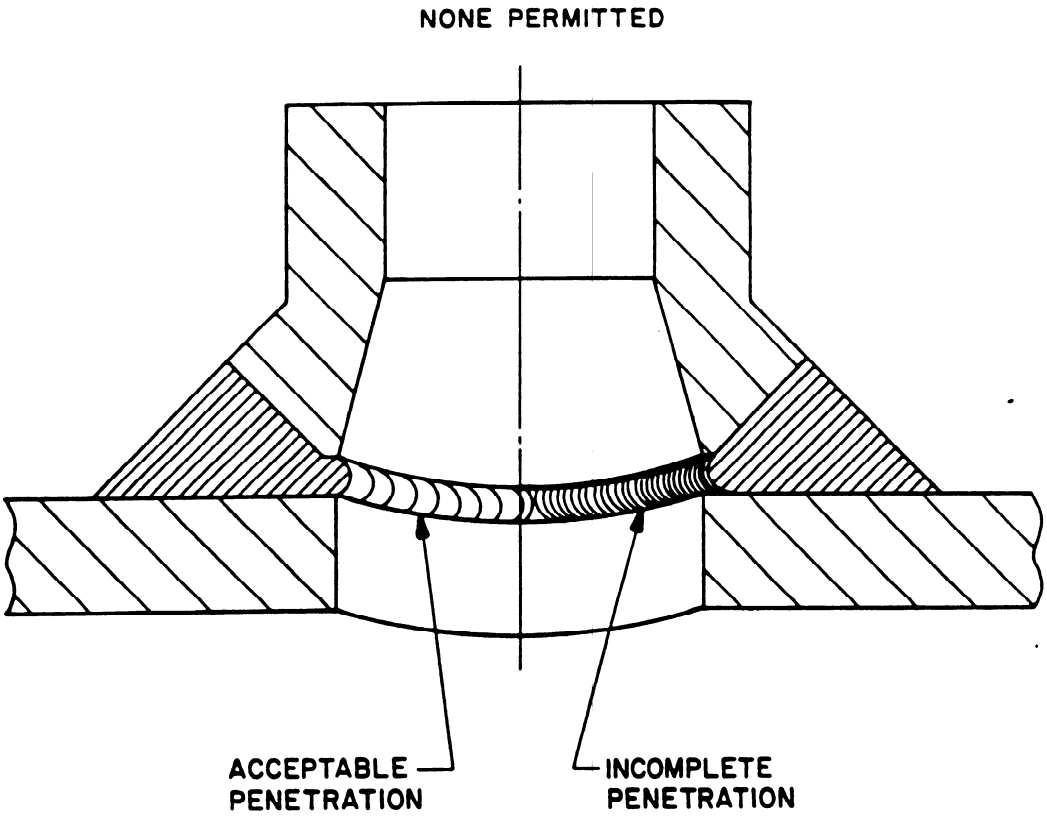

Figure A-17, Incomplete Penetration (Branch).

This Document is Uncontrolled When Printed.
Check the LMS web site to verify that this is the correct version before use.