Downloaded from http://www.everyspec.com

REVISIONS			
SYMBOL	DESCRIPTION	DATE	APPROVAL
—	RELEASED	3/16/92	

SHEET REVISION STATUS

SH	1	2	3	4	5	6	7	8	9	10	11	12	13	14	15	16	17	18	19	20
REV	--	--	--	--	--	--	--	--	--	--	--	--	--	--	--	--	--	--	--	--
SH	21	22	23	24	25	26	27	28	29	30	31	32	33	34	35	36	37	38	39	40
REV	--	--	--	--	--	--	--	--												

ORIGINATOR T.J. Perry T.J. Perry/Paramax	DATE 3/6/92	FSC: 5935
APPROVED S.E. Archer-Davies/Paramax	3/6/92	Connectors, Electrical, Rectangular, Polarized Shell, EMI Shielding (Size 1) For Space Flight Use, Detail Specification For
CODE 311 APPROVAL S.A. Naus/GSFC	3/9/92	
CODE 311 SUPERVISORY APPROVAL G.P. Kramer, Jr./GSFC	3/13/92	
ADDITIONAL APPROVAL		S-311-P-718/3

NATIONAL AERONAUTICS AND SPACE ADMINISTRATION
GODDARD SPACE FLIGHT CENTER
GREENBELT, MARYLAND 20771

CAGE CODE: 25306

Downloaded from http://www.everyspec.com

1 SCOPE

1.1 Specification for connectors. This specification covers the detail provisions for rectangular, polarized shell, electrical connectors capable of continuous operation in a space environment within a temperature range of -65° to +125°C. Connectors use rear-insertion and rear-release crimp-type contacts, supplied separately. Detail specification GSFC S-311-P-718/2 covers the contacts for the electrical connectors. The connectors covered by this detail specification (GSFC S-311-P-718/3) shall be compatible (intermateable and intermountable, but not totally interchangeable) with connectors delineated by GSFC S-311-P-718/1. The connectors are designed to be used with EMI backshells furnished under GSFC S-311-P-718/4.

1.2 GSFC General specification. Unless otherwise noted, all connector provisions and requirements of GSFC general specification S-311-P-718 apply to this specification.

1.3 Connector-type designations. Connectors shall be of the following type designations, and shall be ordered by their type designations only.

700-42/3 -X -P

- -P: Contact Type (1.3.2)
- -X: Contact Arrangement (1.3.1)
- 700-42/3: GSFC prefix (standard for all connector-type designations)

1.3.1 Contact arrangement. Select the contact arrangement from Figure 1.

1.3.2 Contact type. Select the contact type: P for pin; S for socket (Note: Plug-type connectors are available with socket-type contacts only while receptacles are equipped with pin-type contacts only). (See Figure 2.)

2. APPLICABLE DOCUMENTS (1.2)

The following documents, of the issue in effect on date of invitation for bids or request for proposal, form a part of this specification to the extent specified herein.

Downloaded from http://www.everyspec.com

2.1 Specifications.

2.1.1 Federal.

QQ-A-200/8	Aluminum Alloy Bar, Rod, Shapes and Tube, Extruded, 6061 and 6062
QQ-A-250/11	Aluminum Alloy 6061, Plate and Sheet
QQ-C-533	Copper-Beryllium Alloy Strip (Copper Alloy Numbers 170 and 172)
ZZ-R-765	Rubber, Silicone, Low and High-Temperature and Tear Resistant

2.1.2 Military.

MIL-C-26074	Coatings, Electroless Nickel, Requirements for
MIL-C-17	Cables, Radio Frequency; Coaxial, Dual Coaxial, Twin Conductor, and Twin Lead
MIL-W-16878	Wire, Electrical, Insulated, High Temperature
MIL-C-22520	Crimping Tools, Contact, Electric, Hand, General Specification for
MIL-T-22910	Tool, Crimping, Hand, for Crimp Style Electric Terminal and Shield Ferrule
MIL-I-43553	Ink, Marking, Epoxy Base
MIL-G-45204	Gold Plating, Electrodeposited

2.1.3 NASA/GSFC.

GSFC S-311-P-718	Connectors, Electrical, Rectangular (Power and Coaxial Contacts) (Including EMI Shielding) for Space Flight Use, General Specification for
GSFC S-311-P-718/1	Connectors, Electrical, Rectangular, Polarized Shell, For Space Flight Use, Detail Specification for
GSFC S-311-P-718/2	Contacts, Power and Coaxial, Removable, for Electrical Connectors (Sizes 1, 2, and 3), Detail Specification for

Downloaded from http://www.everyspec.com

GSFC S-311-P-718/4	Backshell Kits, Connector, Rectangular, EMI Shielding, Strain Relief (Sizes 1, 2, 3), For Space Flight Use, Detail Specification for

2.2 Standards.

MIL-STD-1285	Marking of Electrical and Electronic Parts
MS3197	Gage Pin, for Socket Engagement Test
DOD-STD-100	Engineering Drawing Practices

2.3 Other publications.

NAS1668	Plug, Grommet Sealing, Electrical Connector

2.4 Order of precedence. The order of precedence delineated in the general specification shall apply.

3. REQUIREMENTS (1.2)

3.1 Materials, design, and construction. Connectors shall be of the materials, design, construction, and physical dimensions as specified herein (Figures 1 and 2). They shall be constructed to accommodate removable crimp-type power and coaxial contacts conforming to specification GSFC S-311-P-718/2. (Reference: Finishes not specified, which are known to sublimate in a hard vacuum, such as cadmium, shall not be used.) Connectors shall be designed to be mated when the distance between the plug and receptacle flange is achieved as indicated in Figure 2A and Figure 2B.

3.1.1 Material weight loss (vacuum). Connector materials used shall be such that in no case will outgassing limits of 3.2.3 be exceeded when tested in accordance with GSFC S-311-P-718.

3.1.2 Insert material. Inserts shall be made of Epiall 1908 or Epiall 1914. The inserts shall meet the material weight loss requirement of 3.1.1.

3.1.3 Contact designation. Contact locations (numerals) shall appear on the front and rear faces of inserts to identify the contacts (Figure 1). The socket contact identification shall correspond to the mating-pin contact identification.

3.1.4 Shell design. The shell shall be designed to positively retain the insert and be so constructed that the insert cannot be removed without the use of tools. Shells shall be scoop-proof and shall be chamfered at the mating surfaces. The connector

Downloaded from http://www.everyspec.com

shall be so designed that a single shell configuration pair will accommodate either contact arrangement (Figure 1). Flange location shall be as indicated in Figure 2.

3.1.4.1 Shell polarization. Polarization shall be accomplished by a shaped-shell design. Polarization shall be accomplished before engagement of the contacts.

3.1.4.2 Shell material and finish. The shells shall be made of aluminum: alloy in accordance with QQ-A-200/8, 6061-T6511, or QQ-A-250/11, 6061-T651. The connector's shell surface shall be nickel plated per MIL-C-26074, Class 4, Grade B. A pair of blue painted alignment stripes shall be located as per Figure 2A and 2B. The paint shall be per MIL-I-43553, Type I. The paint shall meet the weight loss requirements of 3.1.1.

3.1.4.3 Shell spring fingers. Spring fingers shall be designed to make electrical contact with the mating shell without interfering with proper engagement. The fingers shall be positively retained about the shell periphery per Figure 2 and shall be made from beryllium copper alloy in accordance with QQ-C-533. Finger plating shall be gold plated per MIL-G-45204, Type II, Class II, Grade C, over Type I, Class 1, Grade A over copper flash per MIL-C-14550, .00001 - .00010 inches thick.

3.1.5 Connector mating/demating tooling. The supplier shall design and/or recommend the required tooling necessary for connector mating/demating.

3.1.6 Contact retention clips. Contact retention clips shall be heat treated to a hardness of 65,000 psi. The clip material shall be beryllium copper.

3.1.7 Interfacial seal. All pin contact inserts shall have a resilient interface seal bonded to the front face, with individual pin barriers. The pin barrier projections shall seal in their respective lead-in chamfers of the hard face socket insert. The resilient interfacial seal shall provide individual contact seals in the mated condition to ensure circuit isolation between each contact and contact to shell. The interfacial seal shall meet the material weight loss requirement of 3.1.1.

3.1.8 Wire sealing member (rear grommet). A wire sealing member shall be provided on the rear of both the plug and receptacle and it shall not be removable from the connector. It shall be designed to provide sealing to meet the environmental requirements of this specification when using wire of outer diameters within the range shown below. When wires of smaller diameter are specified, (e.g., for qualification) the use of shrink-fit tubing is permitted, as required. The grommet shall meet the material weight loss requirement of 3.1.1. The grommet shall be of a triple-gland design.

Downloaded from http://www.everyspec.com

Contact Cavity	Wire Size	Finished Wire Outside Dimensions (in.) Min.		Max
8	8(1)	0.197	-	0.217
16	16-18-20(1)	0.064	-	0.095
RG-393/U	RG-393/U(2)	0.380	-	0.400
RG-142B/U	RG-142B/U(3)	0.190	-	0.200

(1)MIL-W-16878. type EE
(2)MIL-C-17/127
(3)MIL-C-17/60

3.1.9 Sealing plugs. The same sealing plugs shall be capable of being used in both connector plugs and receptacles. The sealing plug identification shall be as follows:

882-214-002*	For size 8 grommet cavity
NAS1668-2	For size 16 grommet cavity
882-214-004*	For RG-393/U grommet cavity
882-214-003*	For RG-142B/U grommet cavity

*G&H Technology, Inc. FSCM 99447

3.1.10 Angular connect and disconnect capability. The connector pairs, when suitably mounted with one connector half on a floating, spring supported plate, must be capable of engagement or separation without binding, degradation or jamming and without exceeding acceptable force limits when the two connector mounting surfaces are engaged or separated at angles of up to +10° combined with a +0.12 in. misalignment.

3.1.11 Connector weight The maximum weight of each connector half (including a full complement of contacts) minus the back-shells shall be in accordance with Figure 1A through Figure 1D.

3.1.12 Coaxial contact installation. Coaxial plug contacts (pin center contacts) shall only be installed in plug connector halves. Coaxial receptacle (jack) contacts (socket center contacts) shall only be installed in receptacle connector halves.

Downloaded from http://www.everyspec.com

3.2 Performance. (1.2)

3.2.1 Dielectric withstanding voltage. The applicable dielectric withstanding voltage shall be in accordance with Table 1.

Table I. Dielectric withstanding voltage.

	ac V (rms) 60 Hz	
	Sea Level	70,000 ft
Size 8 or 16 contact-to-contact and contact-to-shell	1000	350
Coaxial outer contact-to-shell; coaxial outer contact-to-nearest Size 8 or 16 contact	1000	350
Coaxial outer contact-to-coaxial center contact	1000	350

3.2.2 Contact retention (in insert). The applicable axial load shall be in accordance with Table II.

Table II. Contact retention.

Contact Type	Force in lb (min.)
Size 16	15
Coaxial (RG-393/U)	20
Coaxial (RG-142B/U)	15

3.2.3 Vacuum effects (material outgassing) The material outgassing limits of the insert, interfacial seal and grommet individually shall not exceed 1.0 percent in total weight loss and 0.1 percent in volatile-condensable material.

3.2.4 Contact resistance. The contact resistance shall not exceed the limits of Table III.

Downloaded from http://www.everyspec.com

Table III. Voltage drop.

Contact Size	AWG Wire Size	Test Current (Amperes)	Voltage Drop (mV max)	Voltage Drop (mV max) After Durability
8	8	46	26	32
8	12	23	42	51
16	16	13	49	59
16	22	5	73	88

3.2.5 Insert retention (in shell). The applicable load shall be 60 lb per square in. (psi).

3.2.6 Connector mating and demating forces. The connectors shall not exceed the forces listed in Table IV.

Table IV. Connector mating and demating forces.

Contact Arrangement	Force in lb (max)	
	Mating	Demating
No. 1	141	141
No. 2	225	225
No. 3	280	280
No. 4	280	280

3.2.7 Contact engagement and separation. Contacts shall conform to the forces in Table V. Test pins shall be in accordance with MS3197, except as noted.

3.2.8 Moisture resistance. Connectors shall meet the dielectric withstanding voltage, when tested as specified in 4.1.2, and the applicable insulation resistance as follows:

a. After step 6(c), the insulation resistance shall be 1 megohm, min.

Downloaded from http://www.everyspec.com

b. After 24 hours, (g) , the insulation resistance shall be 1,000 megohms.

Table V. Contact engaging and separating forces.

	Force in Ounces			
	Engaging	Separating	Test Pin or Socket Diameter in inches	
	Max.	Min.	Min.*	Max.*
Size 8	75.0	5.0	MS3197-8X1	MS3197-8Y1
Size 16	17.0	2.0		
Coax. (RG-393/U) (center contact)	11.0	1.0	0.0630	0.0660
Coax. (RG-142B/U) (center contact)	11.0	1.0	0.0480	0.0490
Coax. (RG-393/U) (outer contact)	48.0	3.0	0.4333	0.4356
Coax. (RG-142B/U) (outer contact)	48.0	3.0	0.3122	0.3146

*Min. = +0.0001 -0.0000 *Max = +0.0000 -0.0001

4. QUALITY ASSURANCE PROVISIONS (1.2)

4.1 Quantity of samples for qualification. The quantity of connector samples for each connector type designation desired for qualification shall be two, minimum, together with their counterpart connectors and equipped with appropriate EMI shielding straight strain relief clamps per GSFC S-311-P-718/4. The connectors shall have their full complement of contacts. The connector type designation shall be specified.

4.1.1 Connector wiring. The power contacts shall be wired using wire per specification MIL-W-16878, Type E or Type EE) as follows: Note: The percentages listed are only approximate; however, all contact cavities shall be filled.

a. Size 8-1 AWG 8 - 25%
Size 8-3 AWG 10 - 25%
Size 8-2 AWG 12 - 25%
Size 8-2 AWG 14 - 25%

b. Size 16-1 AWG 16 - 30%
Size 16-1 AWG 20 - 30%
Size 16-2 AWG 22 - 20%
Size 16-2 AWG 26 - 20%

Downloaded from http://www.everyspec.com

c. Coax (RG-393/U) - RG-393/U* - 100%

d. Coax (RG-142B/U) - RG-142B/U* - 100%

*MIL-C-17

4.1.2 Moisture resistance. Mated connectors shall be subjected to the moisture-resistance test as specified in the general specification (1.2), except as modified in 3.2.8.

a. After completion of the sixth step of the final cycle and after removal of surface moisture from the insulator, the insulation resistance shall be measured while observing the limit of 3.2.8(a).

b. The sea-level dielectric-withstanding-voltage test shall be sustained with 600 V ac (rms) 60 Hz applied.

c. After the 24-hour conditioning period, the insulation resistance shall again be measured while observing the limit of 3.2.8(b).

4.2 Final inspection. Connectors final inspection shall consist of these examinations, inspections and tests.

a. Each connector shall be 100 percent inspected per the workmanship provisions of the general specification, GSFC S-311-P-718.

b. Each connector shall be checked for:

1. Critical Dimensions (per applicable figure)
2. Weight (3.1.11)
3. Mating and Demating Test (3.2.6)
4. Contact Retention Tests (all contacts) (3.2.2)
5. Electricals
   (a) DWV (3.2.1)
   (b) IR (3.6.1-General Specification)

5. PREPARATION FOR DELIVERY (1.2)

6. NOTES (1.2)

Custodian:

Code 311.2
Goddard Space Flight Center
Greenbelt, MD 20771

Downloaded from http://www.everyspec.com

THIS PAGE LEFT INTENTIONALLY BLANK

CONTACT TYPE	QUANTITY	CONNECTOR WEIGHT POUNDS (MAX) (3.1.11)	
		PLUG	RECEPTACLE
SIZE 8	8		
SIZE 16	60		
COAX (RG-393/U)	6	2.75	2.85
COAX (RG-142B/U)	6		

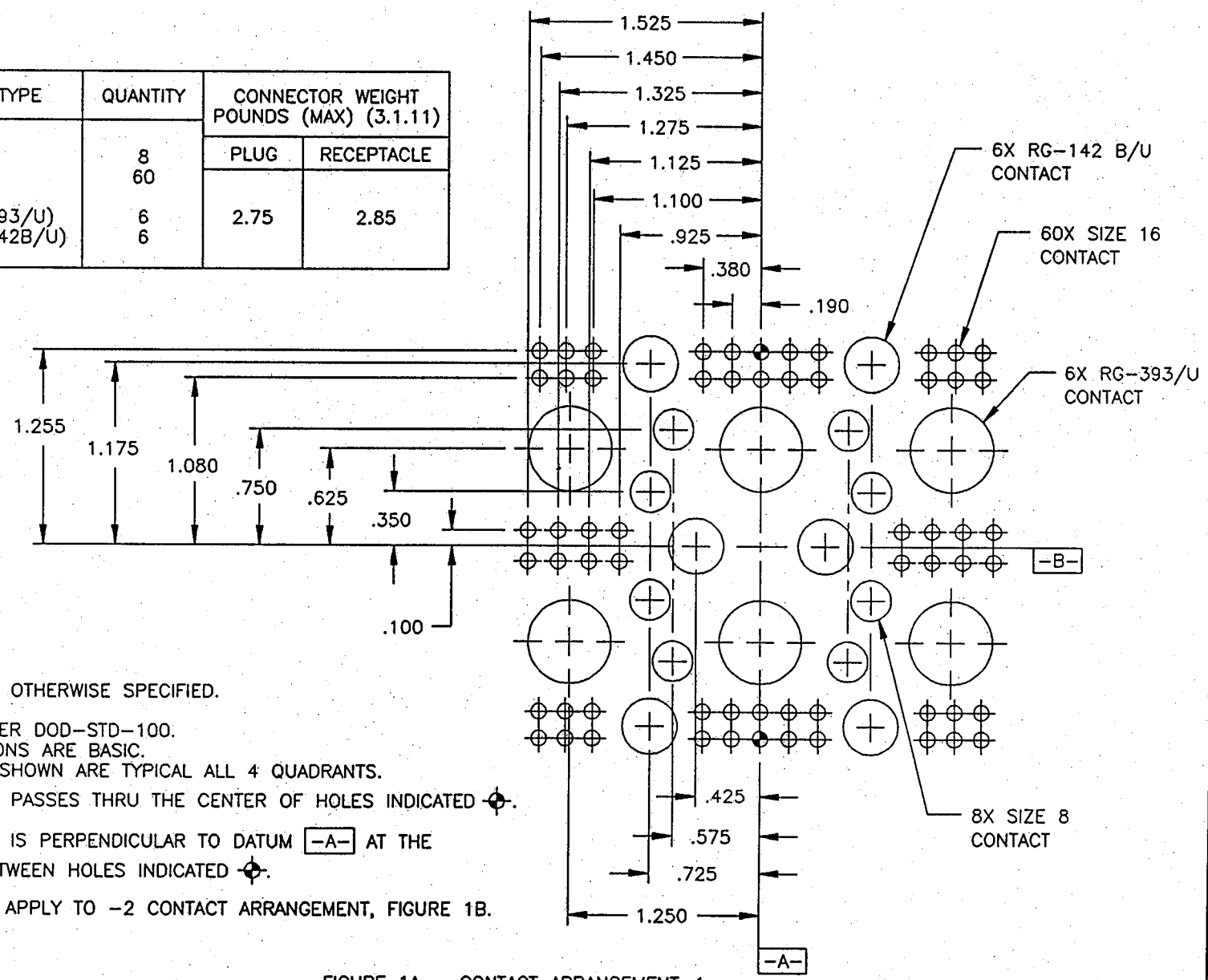

NOTES: UNLESS OTHERWISE SPECIFIED.

1. INTERPRET PER DOD-STD-100.
2. ALL DIMENSIONS ARE BASIC.
3. DIMENSIONS SHOWN ARE TYPICAL ALL 4 QUADRANTS.
4. DATUM -A- PASSES THRU THE CENTER OF HOLES INDICATED ⌖.
5. DATUM -B- IS PERPENDICULAR TO DATUM -A- AT THE MIDPOINT BETWEEN HOLES INDICATED ⌖.
6. NOTES ALSO APPLY TO -2 CONTACT ARRANGEMENT, FIGURE 1B.

FIGURE 1A - CONTACT ARRANGEMENT-1

(PAGE 1 OF 2)

Downloaded from http://www.everyspec.com

Downloaded from http://www.everyspec.com

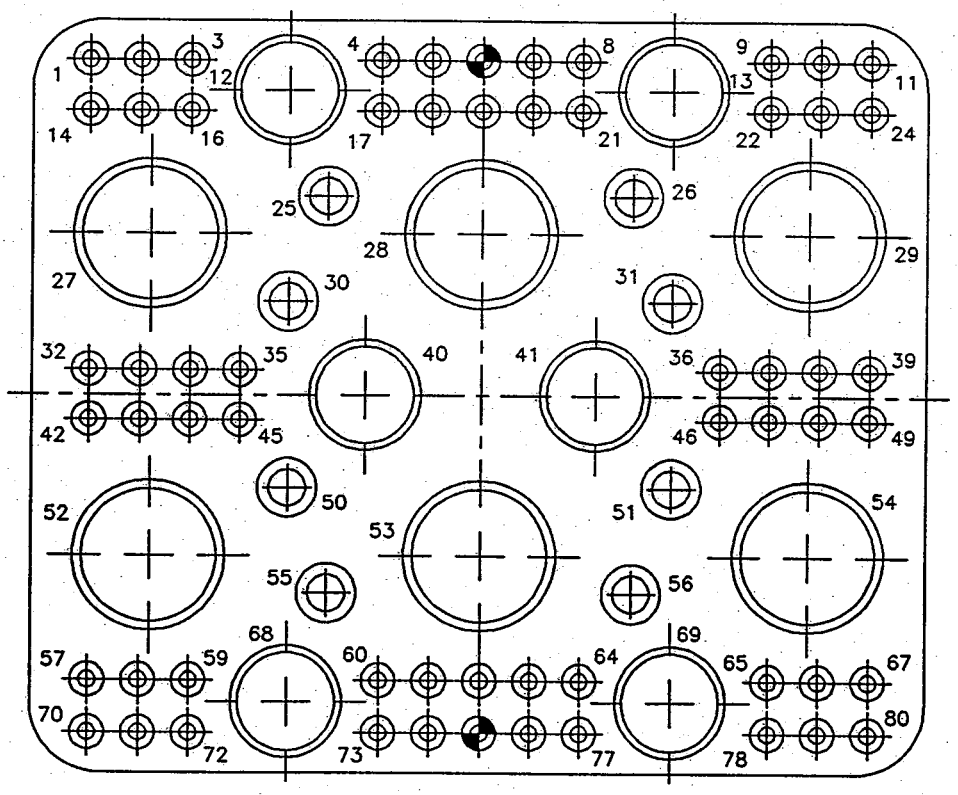

FRONT FACE OF RECEPTACLE
(PIN POWER CONTACTS)

FIGURE 1A – CONTACT ARRANGEMENT–1
(PAGE 2 OF 2)

CONTACT TYPE	QUANTITY	CONNECTOR WEIGHT POUNDS (MAX) (3.1.11)	
		PLUG	RECEPTACLE
SIZE 8	26	2.75	2.85
SIZE 16	86		
COAX (RG-393/U)	0		
COAX (RG-142B/U)	2		

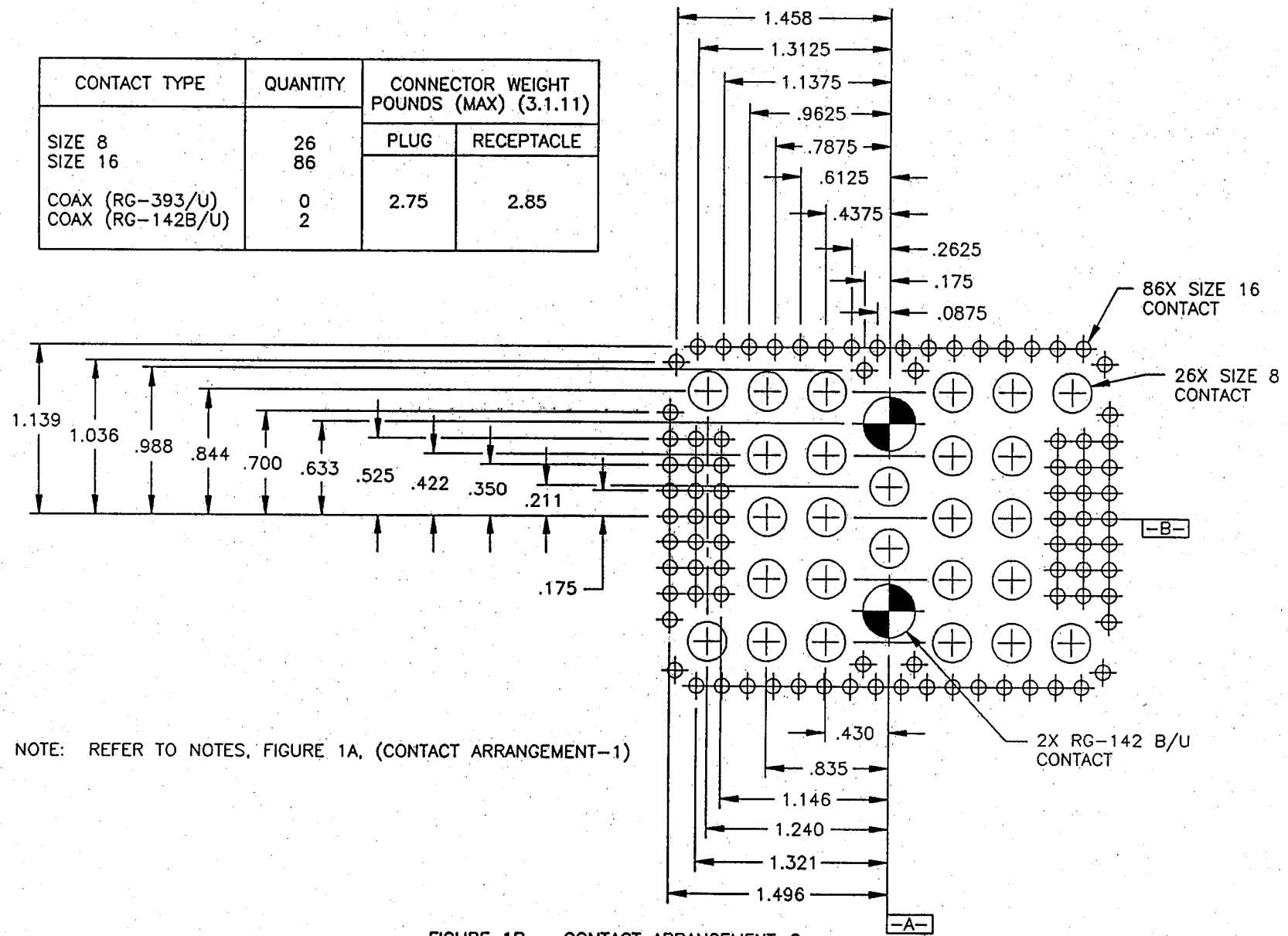

NOTE: REFER TO NOTES, FIGURE 1A, (CONTACT ARRANGEMENT-1)

FIGURE 1B - CONTACT ARRANGEMENT-2

(PAGE 1 OF 2)

Downloaded from http://www.everyspec.com

Downloaded from http://www.everyspec.com

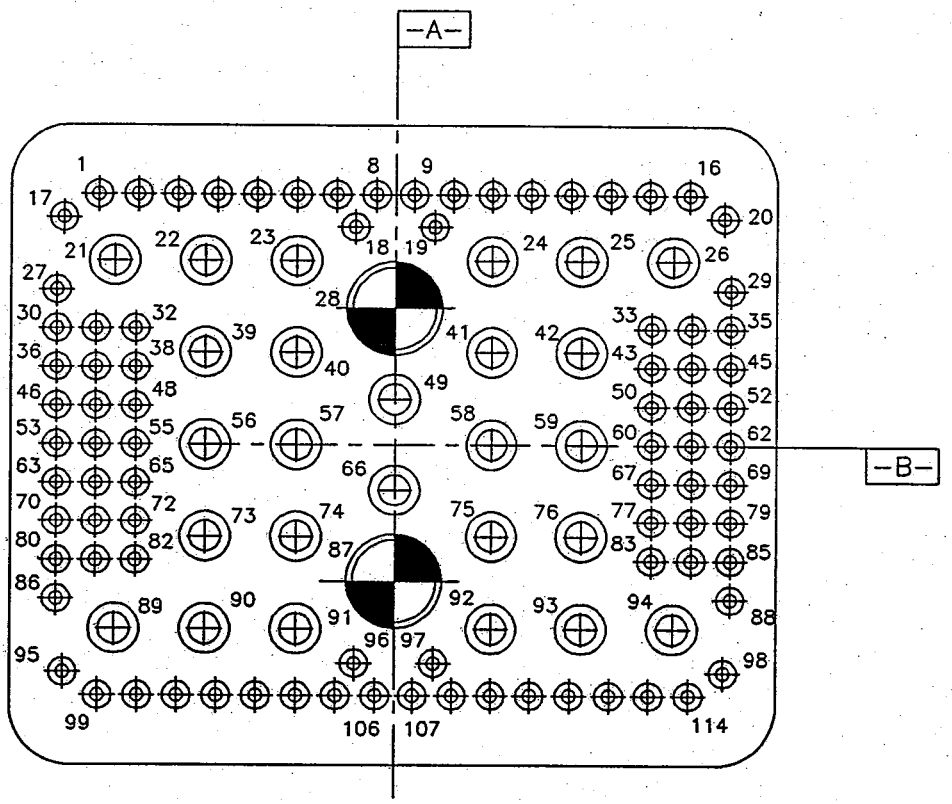

FRONT FACE OF RECEPTACLE
(PIN POWER CONTACTS)

FIGURE 1B – CONTACT ARRANGEMENT–2
(PAGE 2 OF 2)

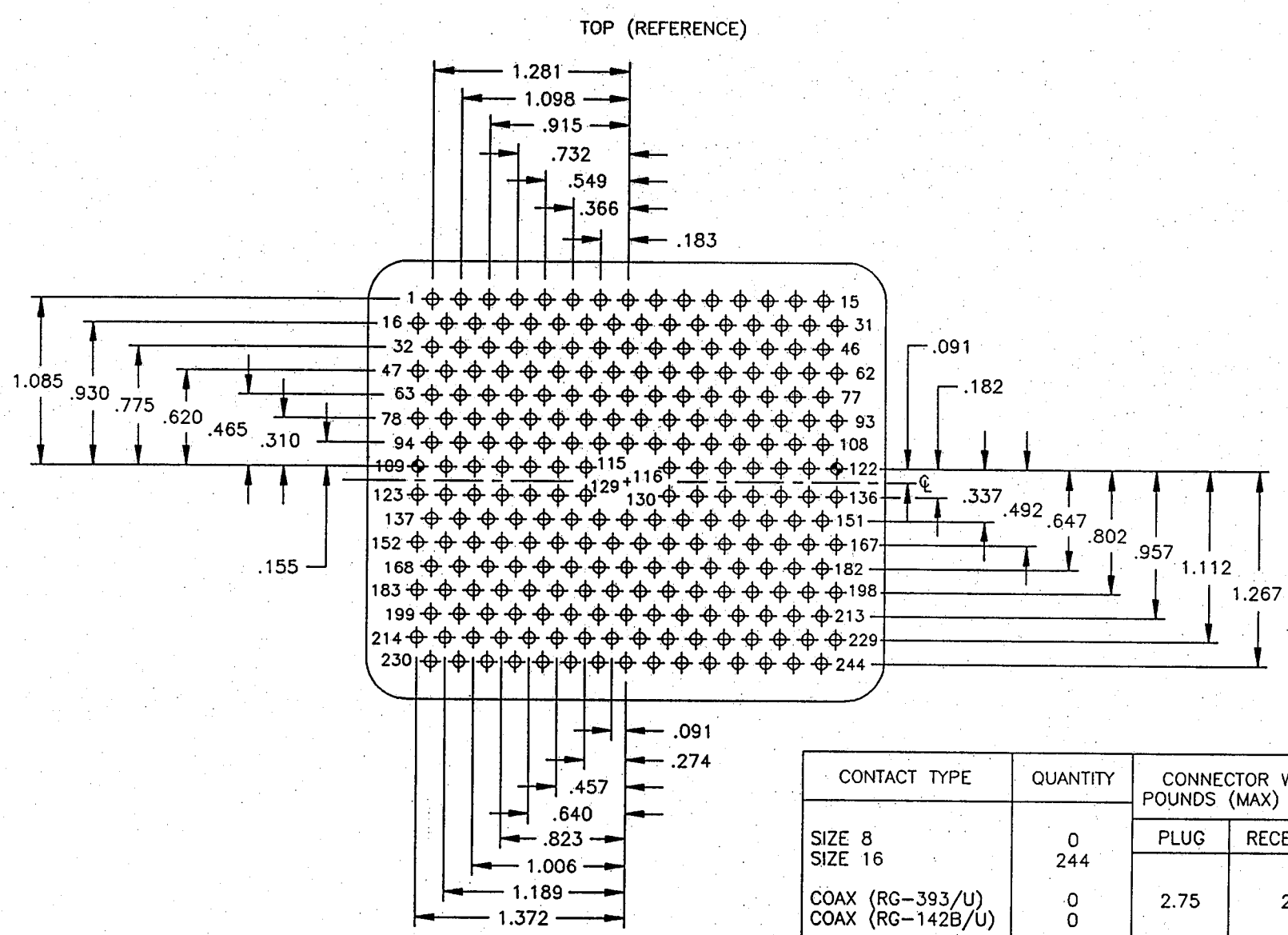

CONTACT TYPE	QUANTITY	CONNECTOR WEIGHT POUNDS (MAX) (3.1.11)	
		PLUG	RECEPTACLE
SIZE 8	0		
SIZE 16	244		
COAX (RG-393/U)	0	2.75	2.85
COAX (RG-142B/U)	0		

FRONT FACE OF RECEPTACLE
(PIN POWER CONTACTS)
FIGURE 1C – CONTACT ARRANGEMENT-3

Downloaded from http://www.everyspec.com

Downloaded from http://www.everyspec.com

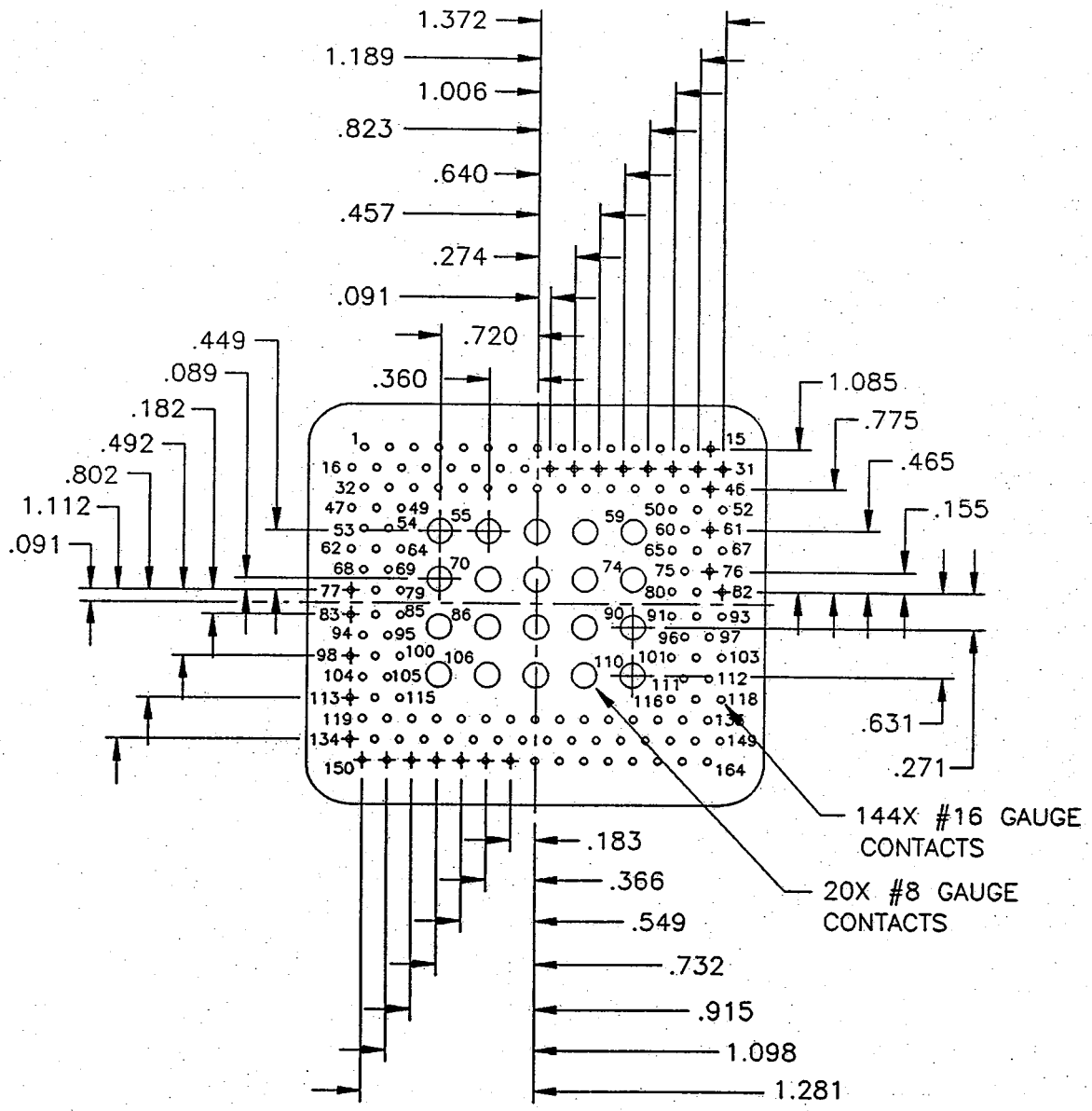

CONTACT TYPE	QUANTITY	CONNECTOR WEIGHT POUNDS (MAX) (3.1.11)	
		PLUG	RECEPTACLE
SIZE 8	20		
SIZE 16	144	2.75	2.85

FRONT FACE OF RECEPTACLE
(PIN POWER CONTACTS)

FIGURE 1D – CONTACT ARRANGEMENT–4

Downloaded from http://www.everyspec.com

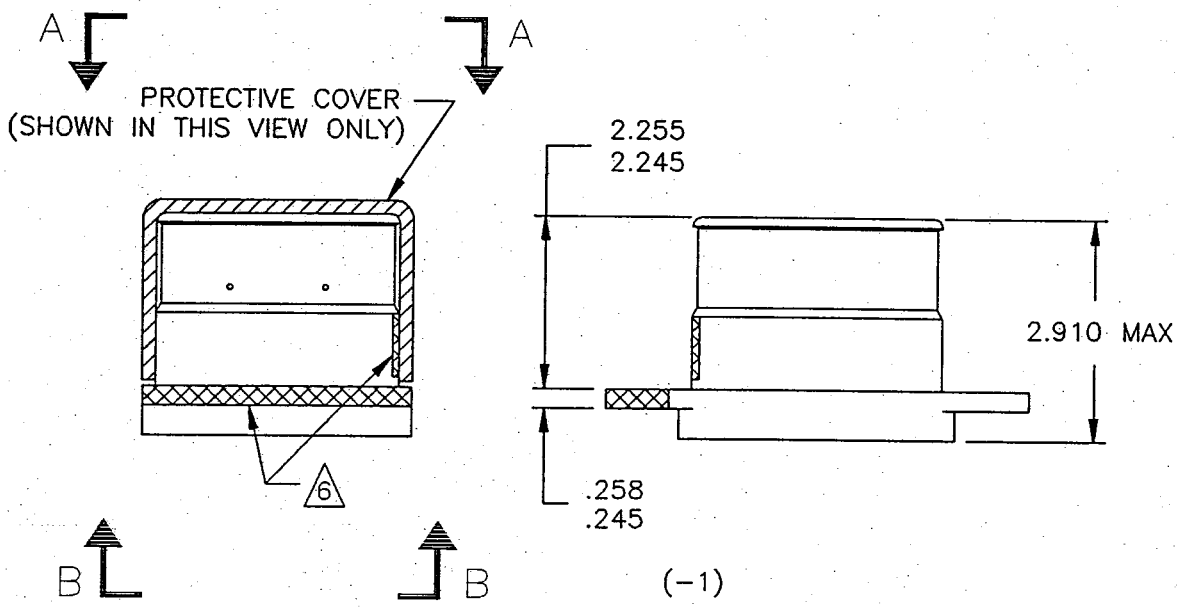

NOTES: UNLESS OTHERWISE SPECIFIED

1. INTERPRET PER DOD-STD-100.

2. G&H TECHNOLOGY., CAGE CODE 99447.

3. PICO CRIMPNG TOOL CO., CAGE CODE 29268.

4. ASTRO TOOL CO., (FORMERLY BUCHANAN CRIMP TOOL PRODUCTS) CAGE CODE 58164.

5. PART MATES WITH RECEPTACLE, GSFC S-700-42/3-X-P.

6. BLUE COLOR BANDS ARE FOR VISUAL ALIGNMENT PRIOR TO MATING.

7. CONNECTOR IS DESIGNED TO FUNCTION WITH EMI BACKSHELL KIT, GSFC GXX PER GSFC S-311-P-718/4.

8. TOLERANCES: .XX = ±.030
   .XXX = ±.010

9. FOR DRY LUBRICANT LOCATIONS, SEE FIGURE 2A (PAGE 4 OF 6).

FIGURE 2A - CONNECTOR CONFIGURATION, CONNECTOR, PLUG, ELECTRICAL, RECTANGULAR (PAGE 1 OF 6)

Downloaded from http://www.everyspec.com

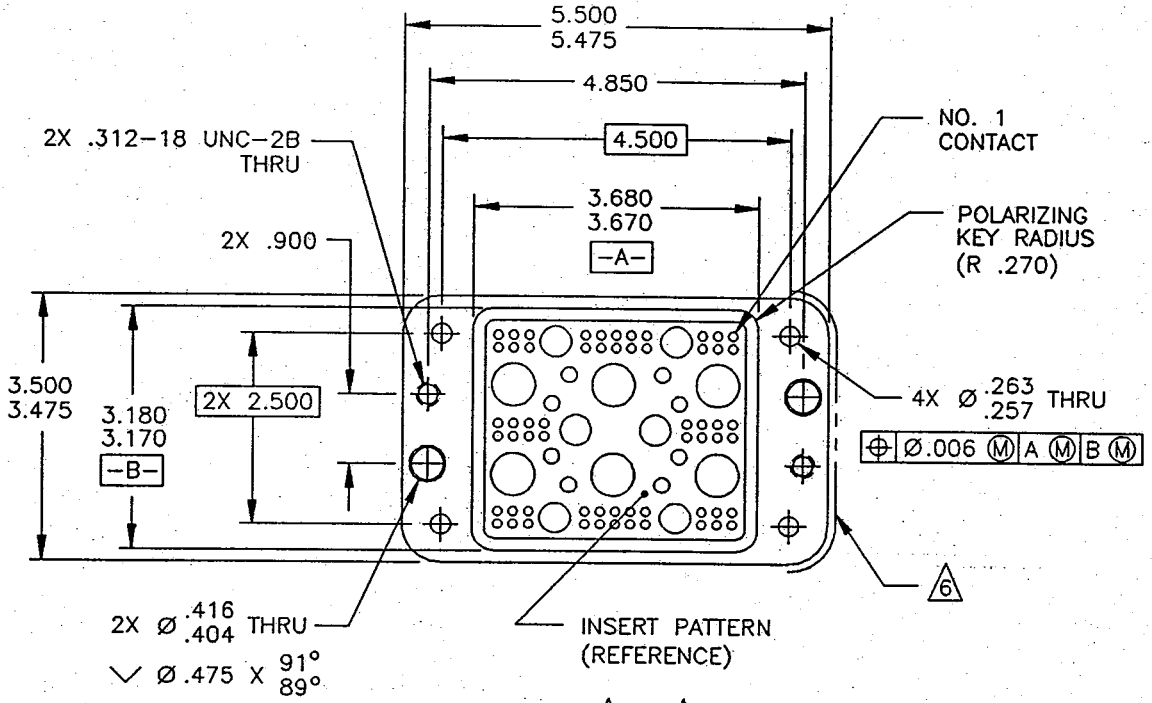

VIEW A-A
(-1)

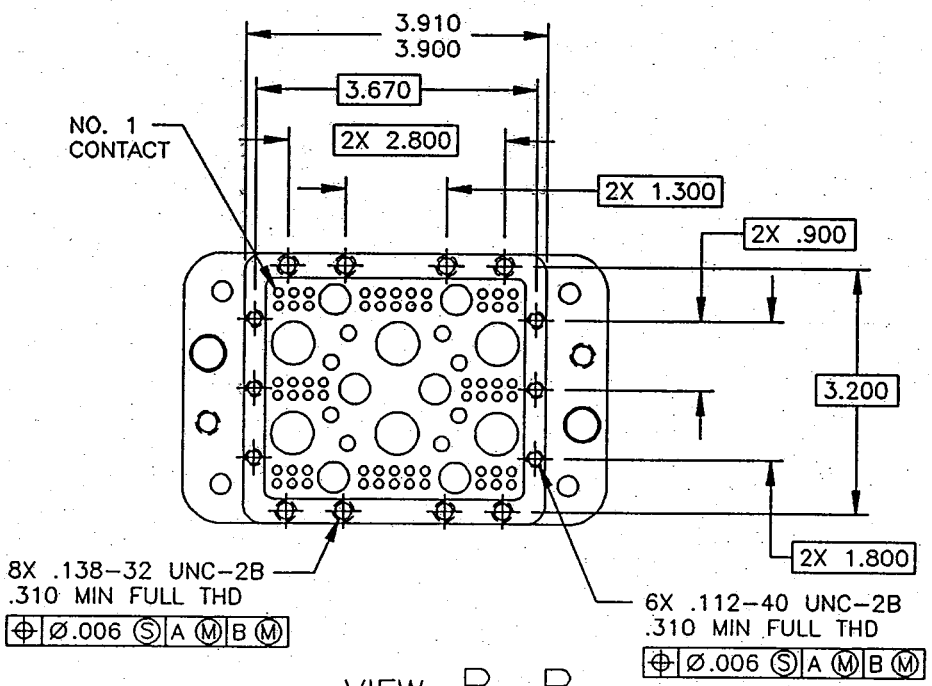

VIEW B-B
(-1)

FIGURE 2A – CONNECTOR CONFIGURATION, CONNECTOR, PLUG, ELECTRICAL, RECTANGULAR (CONTD) (PAGE 2 OF 6)

Downloaded from http://www.everyspec.com

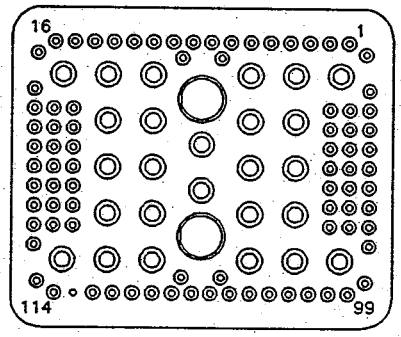

-2
SAME AS (-1)
EXCEPT INSERT PATTERN
AS SHOWN

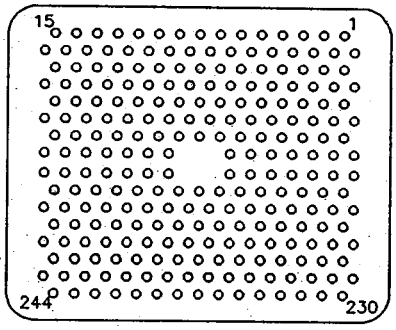

-3
SAME AS (-1)
EXCEPT INSERT PATTERN
AS SHOWN

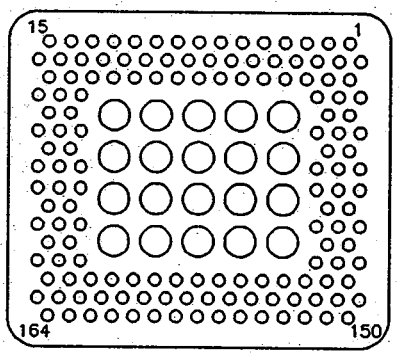

-4
SAME AS (-1)
EXCEPT INSERT PATTERN
AS SHOWN

FIGURE 2A - CONNECTOR CONFIGURATION, CONNECTOR, PLUG, ELECTRICAL, RECTANGULAR (CONTD) (PAGE 3 OF 6)

DRY LUBRICANT DEFINITION

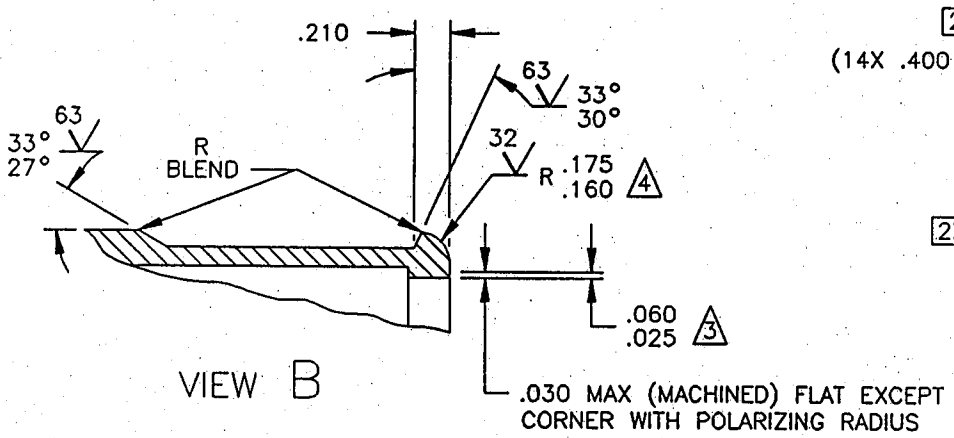

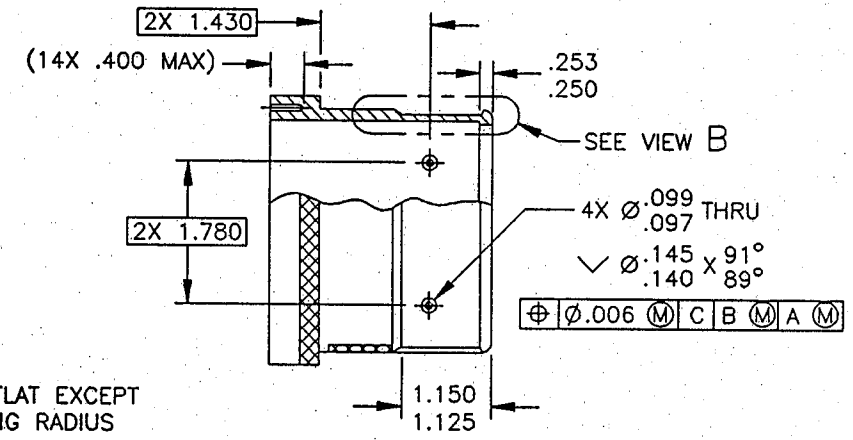

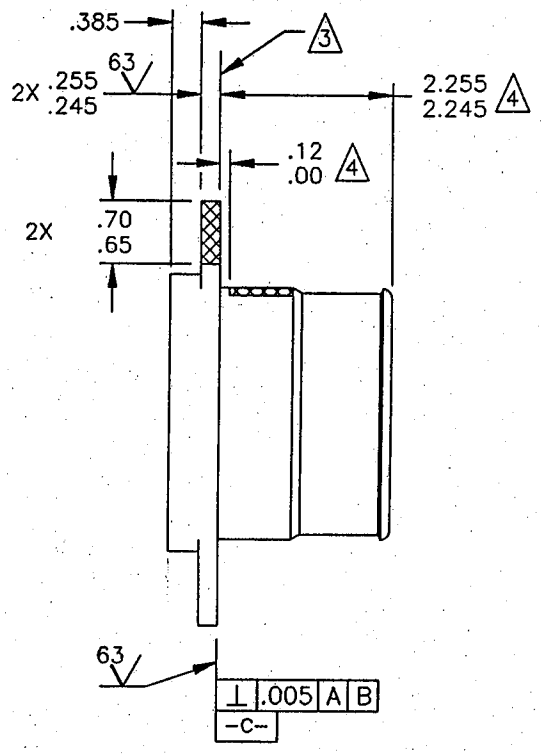

NOTES: UNLESS OTHERWISE SPECIFIED

1. INTERPRET PER DOD-STD-100.

2. ELECTROLESS NICKEL PLATE PER MIL-C-26074, CLASS 4, EXCEPT THICKNESS TO BE .00125-.00150 BUILDUP PER SURFACE.

3. NO SOLID FILM LUBRICANT PERMITTED ON SURFACES NOTED.

4. APPLY SOLID FILM LUBRICANT .0002-.0004 BUILDUP PER SURFACE PER G&H SPEC 999-143, TYPE I, CLASS 1, TO EXTERIOR SURFACE ALONG DIMENSION NOTED EXCEPT CURE 16 HOURS MINIMUM AT 250-260F.

FIGURE 2A - CONNECTOR CONFIGURATION, CONNECTOR, PLUG, ELECTRICAL, RECTANGULAR (CONTD) (PAGE 4 OF 6)

Downloaded from http://www.everyspec.com

MATED VIEW

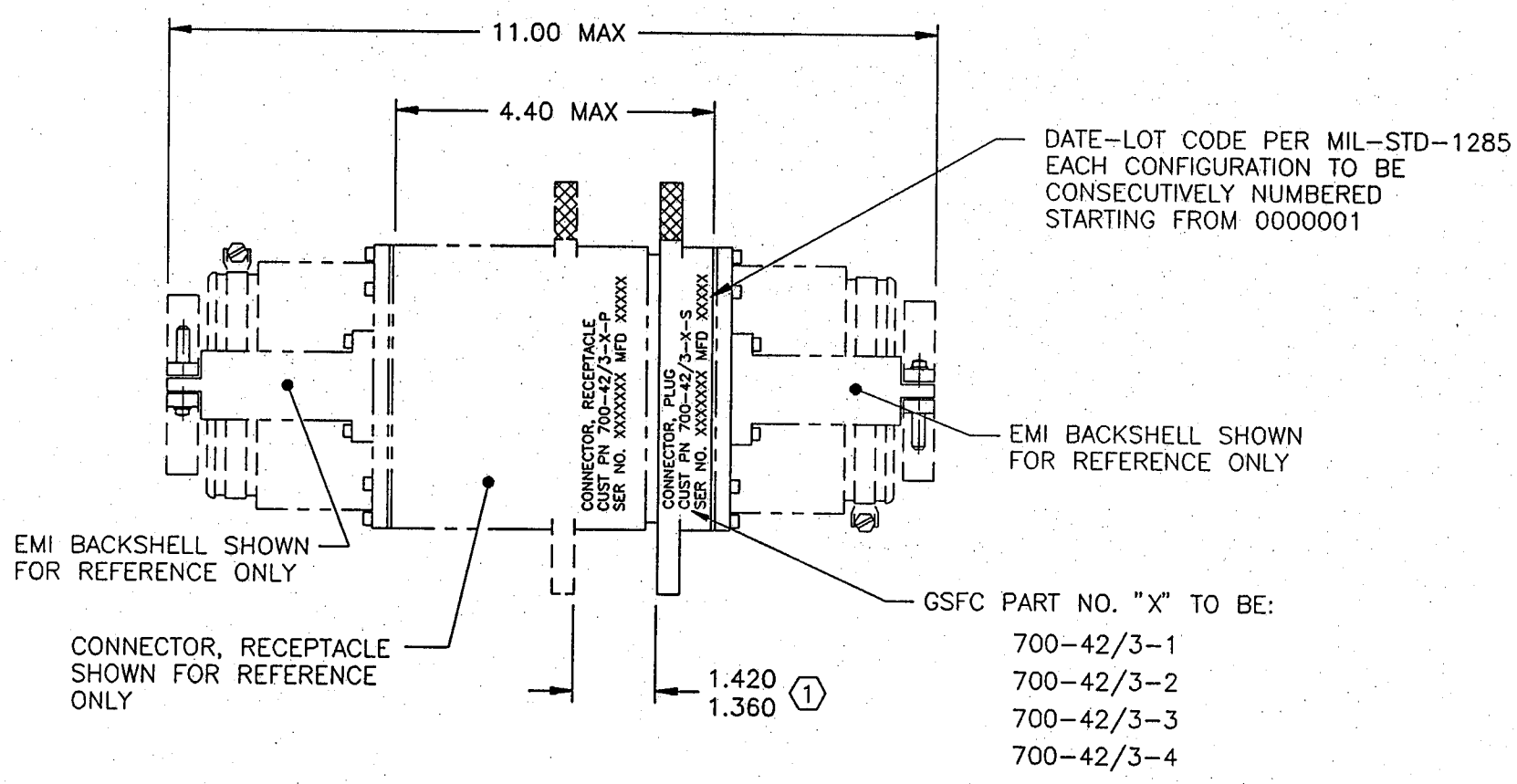

1 CONNECTOR IS MATED WHEN DISTANCE NOTED BETWEEN FLANGES IS ACHIEVED

FIGURE 2A – CONNECTOR CONFIGURATION, CONNECTOR, PLUG, ELECTRICAL, RECTANGULAR (CONTD) (PAGE 5 OF 6)

Downloaded from http://www.everyspec.com

CONTACT SIZE	WIRE OR CABLE SIZE	CONTACT SOCKET P/N NASA	COLOR CODE	SEALING PLUG P/N	CRIMP TOOL NO.	POSITIONER LOCATOR OR DIE NO.	REMOVAL TOOL NO. G&H P/N	INSERTION TOOL NO. G&H P/N	PUSH TOOL NO. G&H P/N	CONNECTOR SEPARATING TOOL NO. G&H P/N	CONNECTOR MATING TOOL NO. G&H P/N
16	16-18-20	GPS20	BLUE 2 BANDS	NAS 1668-2	M22520/1 -01	M22520/1 -02	882-94-001	882-94-001	882-93-001	882-80-001 (2 REQD)	882-90-001 (2 REQD)
	22-24-26	GPS21	GREEN 2 BANDS		M22520/7 -01	M22520/7 -04					
8	8	GPS10	RED 1 BAND	882-214-002 △2	PICO CRIMP TOOL NO. 400B WITH LOCATOR NO. 4354 △3	PICO NO. 414DA-8N △3	882-95-001	882-95-001	882-91-001		
	12-14	GPS11	YELLOW 1 BAND			PICO NO. 414DA-12N △3					
	10	GPS16	WHITE 1 BAND			PICO NO. 414DA-8N △3					
RG-142B/U	RG-142B/U	GCP16	—	882-214-003 △2	M22910/7 -1	ASTRO TOOL 612700 △4	882-95-002	—	882-78-001		
RG-393/U	RG-393/U	GCP14	—	882-214-004 △2	M22910/7 -1	ASTRO TOOL 613802 △4	882-95-003	—	882-78-001		

CONTACT PATTERN IDENTIFICATION NUMBER				CONTACT SIZE
GSFC 700-42/3-1-S	GSFC 700-42/3-2-S	GSFC 700-42/3-3-S	GSFC 700-42/3-4-S-2	
1 THRU 11, 14 THRU 24, 32 THRU 39, 42 THRU 49, 57 THRU 67, 70 THRU 80	1 THRU 20, 27, 29 THRU 38, 43 THRU 48, 50 THRU 55, 60 THRU 65, 67 THRU 72, 77 THRU 86, 88, 95 THRU 114	1 THRU 244	1 THRU 54, 60 THRU 69, 75 THRU 85, 91 THRU 105, 111 THRU 164	16
25, 26, 30, 31, 50, 51, 55, 56	21 THRU 26, 39 THRU 42, 49, 56 THRU 59, 66, 73 THRU 76, 89 THRU 94	NONE	55 THRU 59, 70 THRU 74, 86 THRU 90, 106 THRU 110	8
12, 13, 40, 41, 68, 69	28, 87	NONE	NONE	RG-142B/U
27, 28, 29, 52, 53, 54	NONE	NONE	NONE	RG-393/U

FIGURE 2A – CONNECTOR CONFIGURATION, CONNECTOR, PLUG, ELECTRICAL, RECTANGULAR (CONTD) (PAGE 6 OF 6)

Downloaded from http://www.everyspec.com

Downloaded from http://www.everyspec.com

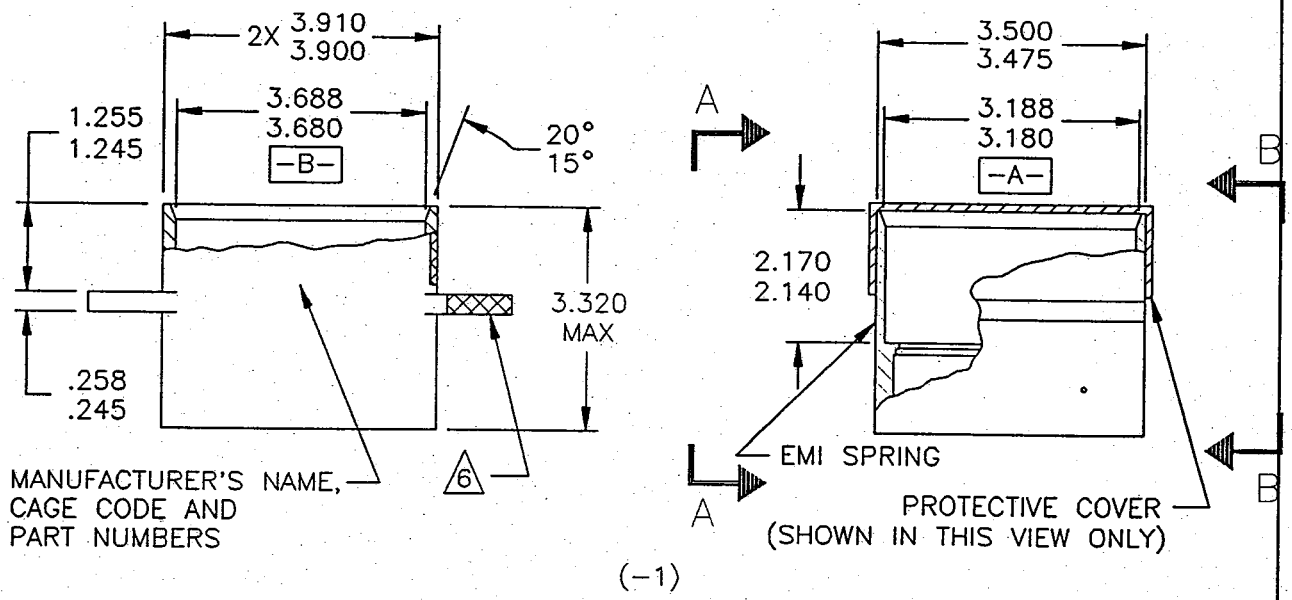

NOTES: UNLESS OTHERWISE SPECIFIED

1. INTERPRET PER DOD-STD-100.

2. G&H TECHNOLOGY., CAGE CODE 99447.

3. PICO CRIMPNG TOOL CO., CAGE CODE 29268.

4. ASTRO TOOL CO., (FORMERLY BUCHANAN CRIMP TOOL PRODUCTS) CAGE CODE 58164.

5. PART MATES WITH PLUG, GSFC S-311-P-718/3-X-S.

6. BLUE COLOR BANDS ARE FOR VISUAL ALIGNMENT PRIOR TO MATING.

7. CONNECTOR IS DESIGNED TO FUNCTION WITH EMI BACKSHELL KIT, GSFC GXX PER GSFC S-311-P-718/4.

8. TOLERANCES: .XX = ±.030
.XXX = ±.010

FIGURE 2B - CONNECTOR CONFIGURATION, CONNECTOR, RECEPTACLE, ELECTRICAL, RECTANGULAR

(PAGE 1 OF 5)

Downloaded from http://www.everyspec.com

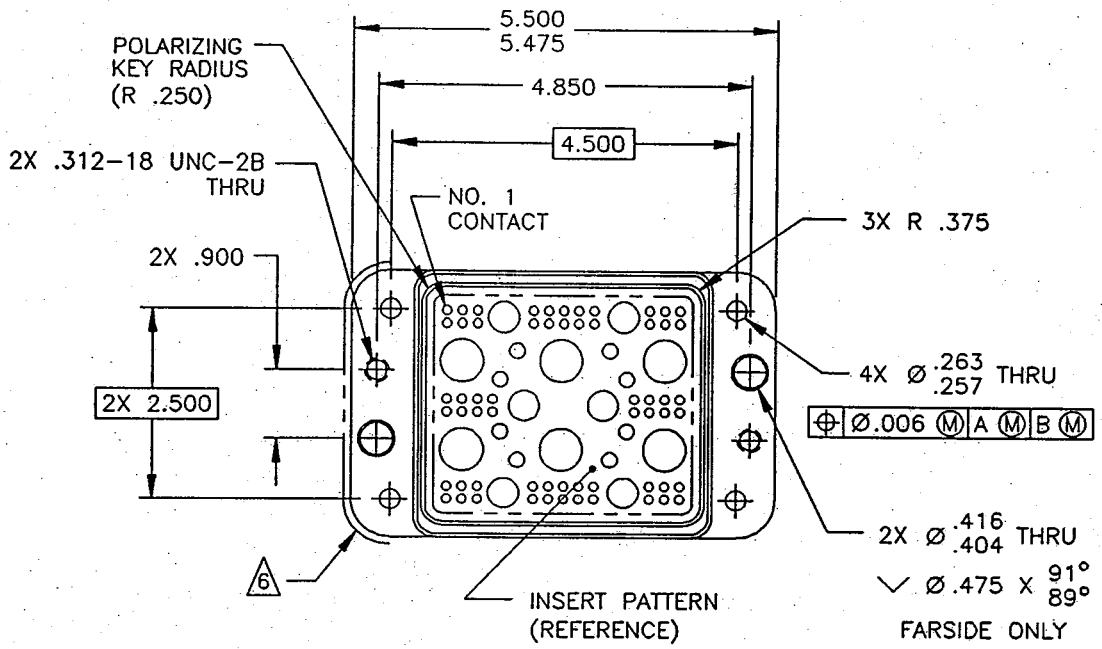

VIEW A–A
(–1)

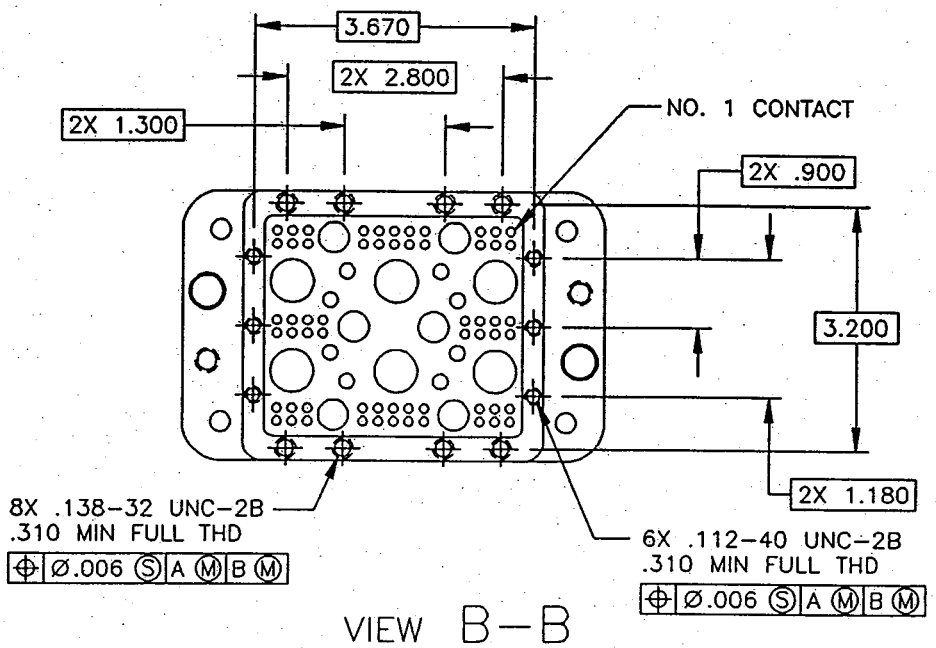

VIEW B–B
(–1)

FIGURE 2B – CONNECTOR CONFIGURATION, CONNECTOR, RECEPTACLE, ELECTRICAL, RECTANGULAR (CONTD)

(PAGE 2 OF 5)

Downloaded from http://www.everyspec.com

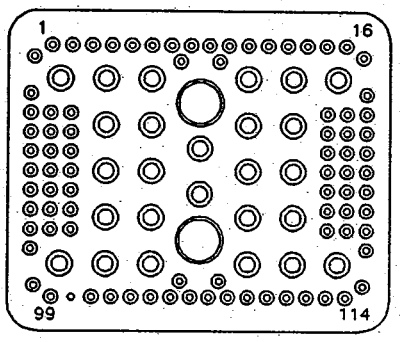

-2
SAME AS (-1)
EXCEPT INSERT PATTERN
AS SHOWN

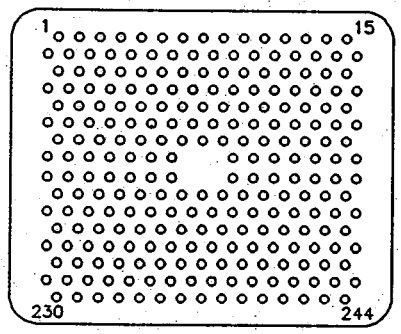

-3
SAME AS (-1)
EXCEPT INSERT PATTERN
AS SHOWN

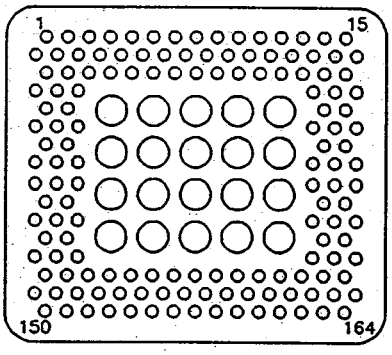

-4
SAME AS (-1)
EXCEPT INSERT PATTERN
AS SHOWN

FIGURE 2B - CONNECTOR CONFIGURATION, CONNECTOR, RECEPTACLE, ELECTRICAL, RECTANGULAR (CONTD)
(PAGE 3 OF 5)

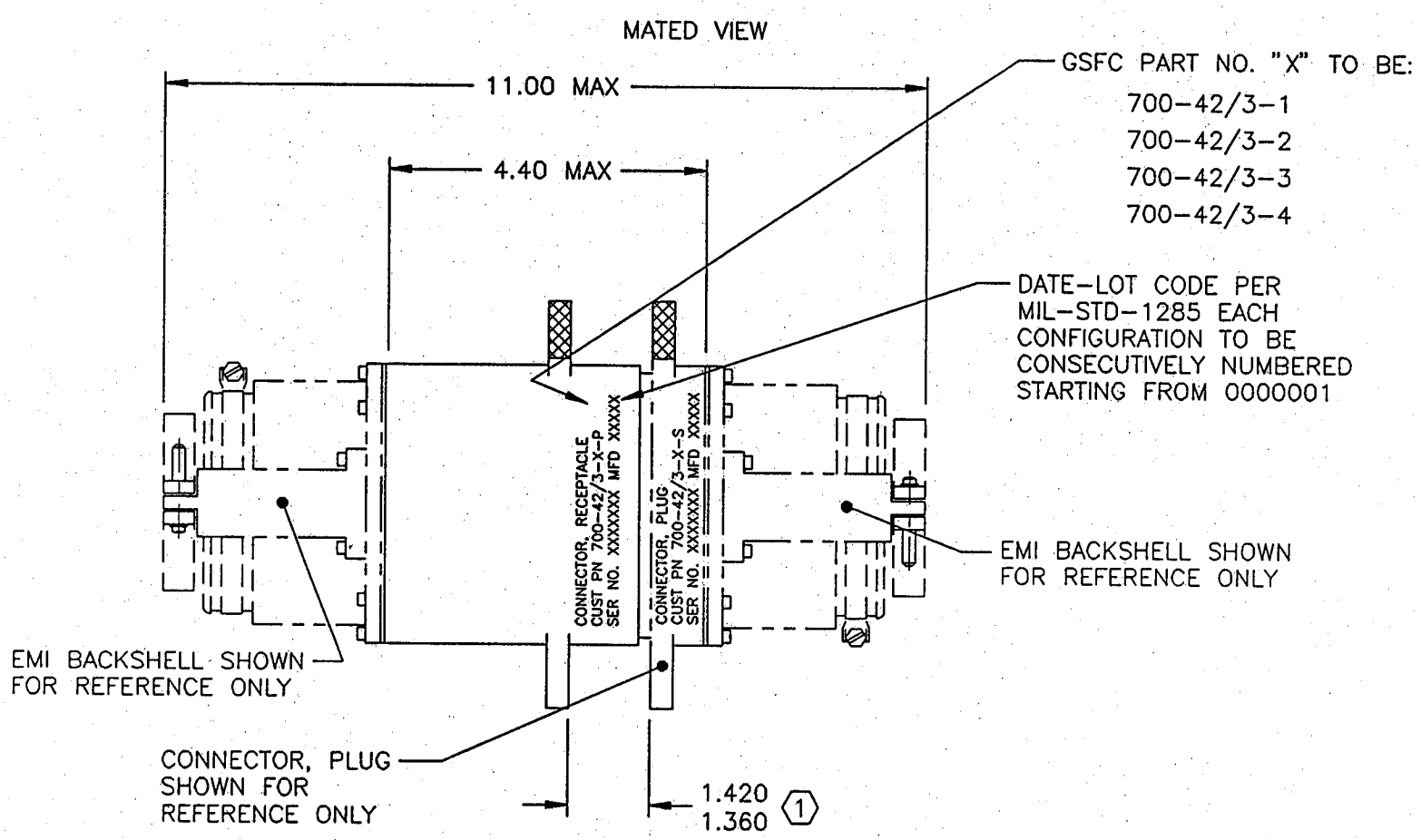

1 CONNECTOR IS MATED WHEN DISTANCE NOTED BETWEEN FLANGES IS ACHIEVED

FIGURE 2B – CONNECTOR CONFIGURATION, CONNECTOR, RECEPTACLE, ELECTRICAL, RECTANGULAR (CONTD)

(PAGE 4 OF 5)

Downloaded from http://www.everyspec.com

CONTACT SIZE	WIRE OR CABLE SIZE	CONTACT SOCKET P/N NASA	COLOR CODE	SEALING PLUG P/N	CRIMP TOOL NO.	POSITIONER LOCATOR OR DIE NO.	REMOVAL TOOL NO. G&H P/N	INSERTION TOOL NO. G&H P/N	PUSH TOOL NO. G&H P/N	CONNECTOR SEPARATING TOOL NO. G&H P/N	CONNECTOR MATING TOOL NO. G&H P/N
16	16-18-20	GPP20	BLUE 2 BANDS	NAS 1668-2	M22520/1 -01	M22520/1 -02	882-94-001	882-94-001	882-93-001	882-80-001 (2 REQD)	882-90-001 (2 REQD)
	22-24-26	GPP21	GREEN 2 BANDS		M22520/7 -01	M22520/7 -04					
8	8	GPP17	RED 1 BAND	882-214-002 △2	PICO CRIMP TOOL NO. 400B WITH LOCATOR NO. 4354 △3	PICO NO. 414DA-8N △3	882-95-001	882-95-001	882-91-001		
	12-14	GPP18	YELLOW 1 BAND			PICO NO. 414DA-12N △3					
	10	GPP19	WHITE 1 BAND			PICO NO. 414DA-8N △3					
RG-142B/U	RG-142B/U	GCS15	—	882-214-003 △2	M22910/7 -1	ASTRO TOOL 612700 △4	882-95-002	882-92-002 882-95-002	882-79-001		
RG-393/U	RG-393/U	GCS14	—	882-214-004 △2	M22910/7 -1	ASTRO TOOL 613802 △4	882-95-003	882-92-001 882-95-003	882-79-001		

CONTACT PATTERN IDENTIFICATION NUMBER				CONTACT SIZE
GSFC 700-42/3-1-P	GSFC 700-42/3-2-P	GSFC 700-42/3-3-P	GSFC 700-42/3-4-P	
1 THRU 11, 14 THRU 24, 32 THRU 39, 42 THRU 49, 57 THRU 67, 70 THRU 80	1 THRU 20, 27, 29 THRU 38, 43 THRU 48, 50 THRU 55, 60 THRU 65, 67 THRU 72, 77 THRU 86, 88, 95 THRU 114	1 THRU 244	1 THRU 54, 60 THRU 69, 75 THRU 85, 91 THRU 105, 111 THRU 164	16
25, 26, 30, 31, 50, 51, 55, 56	21 THRU 26, 39 THRU 42, 49, 56 THRU 59, 66, 73 THRU 76, 89 THRU 94	NONE	55 THRU 59, 70 THRU 74, 86 THRU 90, 106 THRU 110	8
12, 13, 40, 41, 68, 69	28, 87	NONE	NONE	RG-142B/U
27, 28, 29, 52, 53, 54	NONE	NONE	NONE	RG-393/U

FIGURE 2B – CONNECTOR CONFIGURATION, CONNECTOR, RECEPTACLE, ELECTRICAL, RECTANGULAR (CONTD) (PAGE 5 OF 5)

Downloaded from http://www.everyspec.com