Downloaded from http://www.everyspec.com

MS9927 (ASG)

FED. SUP CLASS 5306

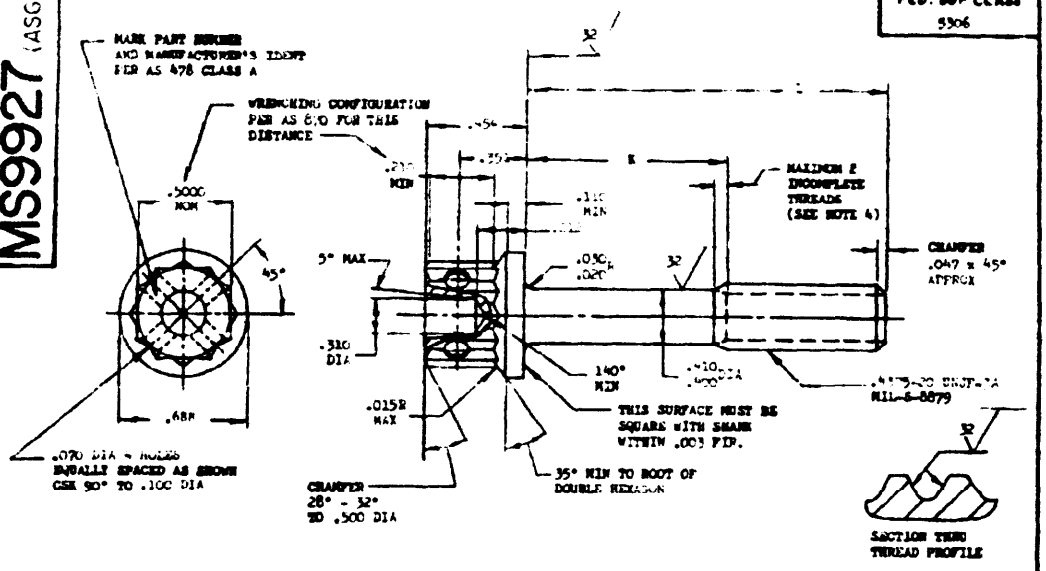

PART NO.	L	K	APPROX WEIGHT LB/100
MS9927-04	.688	.105- .125	5.39
MS9927-05	.750	.105- .125	5.50
MS9927-06	.813	.105- .125	5.61
MS9927-07	.875	.105- .125	5.95
MS9927-08	.938	.105- .125	6.18
MS9927-09	1.000	.105- .125	6.41
MS9927-10	1.063	.105- .125	6.64
MS9927-11	1.125	.105- .125	6.86
MS9927-12	1.188	.105- .125	7.09
MS9927-13	1.250	.105- .125	7.32
MS9927-14	1.312	.125- .188	7.59
MS9927-15	1.375	.190- .250	7.79
MS9927-16	1.438	.250- .310	8.02
MS9927-17	1.500	.315- .375	8.25
MS9927-18	1.563	.378- .438	8.48
MS9927-19	1.625	.440- .500	8.69
MS9927-20	1.688	.500- .562	8.92
MS9927-21	1.750	.563- .625	9.15

PART NO.	L	K	APPROX WEIGHT LB/100
MS9927-22	1.813	.625- .688	9.37
MS9927-23	1.875	.690- .750	9.60
MS9927-24	1.938	.750- .812	9.83
MS9927-25	2.000	.812- .875	10.06
MS9927-26	2.063	.875- .938	10.29
MS9927-27	2.125	.938-1.000	10.52
MS9927-28	2.188	1.000-1.062	10.75
MS9927-29	2.250	1.062-1.125	10.98
MS9927-30	2.313	1.125-1.188	11.21
MS9927-31	2.375	1.188-1.250	11.44
MS9927-32	2.438	1.250-1.312	11.67
MS9927-33	2.500	1.312-1.375	11.90
MS9927-34	2.563	1.375-1.438	12.13
MS9927-35	2.625	1.438-1.500	12.36
MS9927-36	2.688	1.500-1.562	12.59
MS9927-37	2.750	1.562-1.625	12.82
MS9927-38	2.813	1.625-1.688	13.05
MS9927-39	2.875	1.688-1.750	13.28

PART NO.	L	K	APPROX WEIGHT LB/100
MS9927-40	2.938	1.750-1.812	13.51
MS9927-41	3.000	1.812-1.875	13.74
MS9927-42	3.063	1.875-1.938	13.97
MS9927-43	3.125	1.938-2.000	14.20
MS9927-44	3.188	2.000-2.062	14.43
MS9927-45	3.250	2.062-2.125	14.66
MS9927-46	3.313	2.125-2.188	14.89
MS9927-47	3.375	2.188-2.250	15.12
MS9927-48	3.438	2.250-2.312	15.35
MS9927-49	3.500	2.312-2.375	15.58
MS9927-50	3.563	2.375-2.438	15.81
MS9927-51	3.625	2.438-2.500	16.04
MS9927-52	3.688	2.500-2.562	16.27
MS9927-53	3.750	2.562-2.625	16.50
MS9927-54	3.813	2.625-2.688	16.73
MS9927-55	3.875	2.690-2.750	16.96
MS9927-56	4.000	2.815-2.875	17.36
MS9927-57	4.063	2.940-3.000	17.82
MS9927-58	4.250	3.065-3.125	18.27
MS9927-59	4.375	3.190-3.250	18.73
MS9927-60	4.500	3.315-3.375	19.18
MS9927-61	4.625	3.440-3.500	19.64
MS9927-62	4.750	3.565-3.625	20.10
MS9927-63	4.875	3.690-3.750	20.55
MS9927-64	5.000	3.815-3.875	20.97
MS9927-65	5.125	3.940-4.000	21.46
MS9927-66	5.250	4.065-4.125	21.92
MS9927-67	5.375	4.190-4.250	22.38
MS9927-68	5.500	4.315-4.375	22.83
MS9927-69	5.625	4.440-4.500	23.29
MS9927-70	5.750	4.565-4.625	23.77
MS9927-71	5.875	4.690-4.750	24.20
MS9927-72	6.000	4.815-4.875	24.66

1. SHANK SHALL BE STRAIGHT WITHIN .0005 PER INCH OF BOLT LENGTH.
2. THE CONCENTRICITY OF THREAD PD IN RELATION TO THE SHANK SHALL BE WITHIN .006 FIR.
3. THE CONCENTRICITY OF THE SHANK IN RELATION TO THE WASHER FACE DIAMETER AND DOUBLE HEXAGON OD SHALL BE WITHIN .010 FIR.
4. INCOMPLETE THREADS NOT TO ENTER FILLET.
5. MATERIAL: STEEL AMS 6322.
6. HARDNESS: ROCKWELL C26-32.
7. FINISH: CADMIUM PLATE AMS 7400. DIMENSIONS SPECIFIED ARE AFTER PLATING.
8. MANUFACTURING SPECIFICATION: AMS 7452 EXCEPT HEAD SHALL BE UPSET.
9. HEAT TO SHANK FILLET SHALL BE COLD WORKED
10. MAGNETIC PARTICLE INSPECTION PER AMS 2640 AFTER PLATING.
11. SURFACE TEXTURE: USAS B46.1-1962. UNLESS OTHERWISE SPECIFIED, ROUGHNESS IN MU INS MICRO INCHES EXCEPT UNDER HEAD.
12. BREAK SHARP EDGES .005-.015 UNLESS OTHERWISE SPECIFIED.
13. DIMENSIONS IN INCHES. UNLESS OTHERWISE SPECIFIED, TOLERANCES: LINEAR DIMENSIONS ±.010, ANGULAR DIMENSIONS ±5°.
14. DO NOT USE UNASSIGNED PART NUMBERS.

AS & AMS ARE SOCIETY OF AUTOMOTIVE ENGINEERS, INC., PUBLICATIONS.
THIS STANDARD WAS DEVELOPED COOPERATIVELY [illegible]

P.A. USAF - 11	TITLE	MILITARY STANDARD
Other Cust Navy - AS	[illegible]	MS9927 (ASG)
PROCUREMENT SPECIFICATION NONE	SUPERSEDES	SHEET 1 OF 1

DD FORM 672-1 (Limited coordination)
ASD use only

PREVIOUS EDITIONS OF THIS FORM ARE OBSOLETE

U.S. GOVERNMENT PRINTING OFFICE 1968 [illegible]

This military standard is approved by the Department of the Air Force and the Bureau of Naval Weapons and is mandatory for use by these activities. All other military activities are required to employ this standard where suitable.

Review activities: NAF - 82, 85

APPROVED 15 Aug 69 REVISED

NOTES TO PRINTER: REDUCE BORDER TO 4-27/32x9-3/4. PRINT LEFT BORDER LINE ONE INCH FROM LEFT EDGE OF 8x10-1/2 SHEET. PRINT BOTTOM BORDER LINE 3/8 INCH FROM BOTTOM EDGE OF 8x10-1/2 SHEET. SIGNATURE FORM NOT TO BE INCLUDED ON 8x10-1/2 SHEET

DATE

DRAWN BY _____

TYPED BY _____

CHECKED BY _____