Downloaded from http://www.everyspec.com

MS9818

FED. SUP CLASS
5306

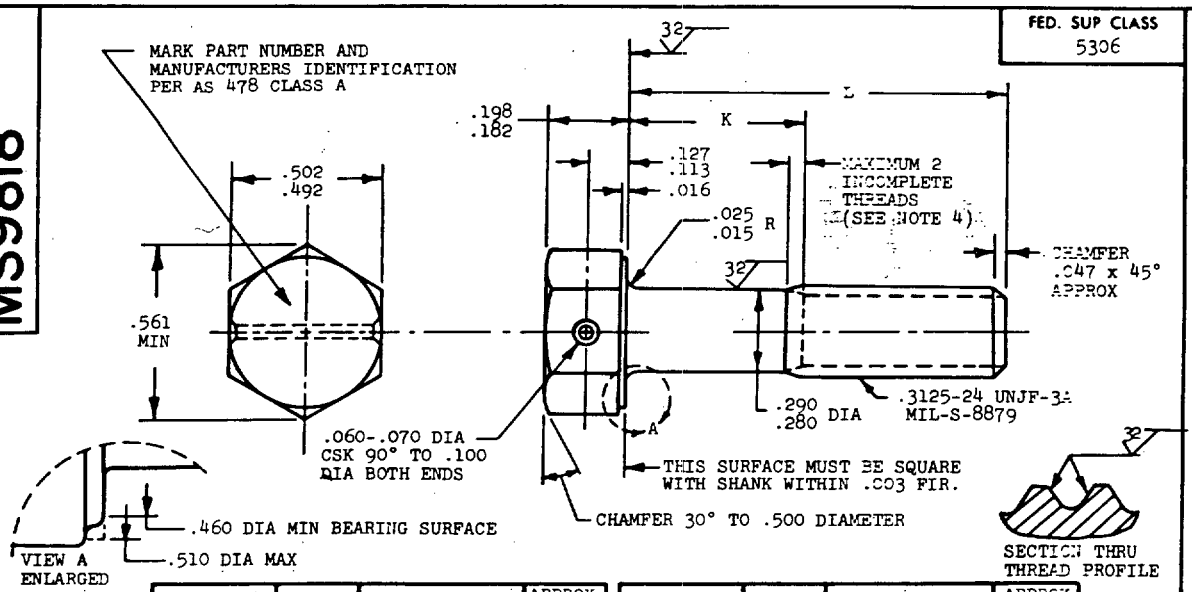

PART NUMBER	L	K	APPROX WEIGHT LB/100
MS9818-04	.500	.088- .108	2.11
MS9818-05	.562	.088- .108	2.22
MS9818-06	.625	.088- .108	2.33
MS9818-07	.688	.088- .108	2.44
MS9818-08	.750	.088- .108	2.55
MS9818-09	.812	.088- .108	2.66
MS9818-10	.875	.088- .108	2.78
MS9818-11	.938	.088- .108	2.89
MS9818-12	1.000	.088- .125	3.00
MS9818-13	1.062	.128- .188	3.12
MS9818-14	1.125	.190- .250	3.23
MS9818-15	1.188	.252- .312	3.34
MS9818-16	1.250	.315- .375	3.45
MS9818-17	1.312	.378- .438	3.57
MS9818-18	1.375	.440- .500	3.68
MS9818-19	1.438	.502- .562	3.79
MS9818-20	1.500	.565- .625	3.90
MS9818-21	1.562	.628- .688	4.01
MS9818-22	1.625	.690- .750	4.12
MS9818-23	1.688	.752- .812	4.23
MS9818-24	1.750	.815- .875	4.35
MS9818-25	1.812	.878- .938	4.46
MS9818-26	1.875	.940-1.000	4.57
MS9818-27	1.938	1.002-1.062	4.68
MS9818-28	2.000	1.065-1.125	4.80
MS9818-29	2.125	1.190-1.250	5.02
MS9818-30	2.250	1.315-1.375	5.25

PART NUMBER	L	K	APPROX WEIGHT LB/100
MS9818-31	2.375	1.440-1.500	5.48
MS9818-32	2.500	1.565-1.625	5.70
MS9818-33	2.625	1.690-1.750	5.93
MS9818-34	2.750	1.815-1.875	6.15
MS9818-35	2.875	1.940-2.000	6.37
MS9818-36	3.000	2.065-2.125	6.59
MS9818-37	3.125	2.190-2.250	6.82
MS9818-38	3.250	2.315-2.375	7.05
MS9818-39	3.375	2.440-2.500	7.27
MS9818-40	3.500	2.565-2.625	7.50
MS9818-41	3.625	2.690-2.750	7.72
MS9818-42	3.750	2.815-2.875	7.95
MS9818-43	3.875	2.940-3.000	8.17
MS9818-44	4.000	3.065-3.125	8.40
MS9818-45	4.125	3.190-3.250	8.63
MS9818-46	4.250	3.315-3.375	8.84
MS9818-47	4.375	3.440-3.500	9.07
MS9818-48	4.500	3.565-3.625	9.29
MS9818-49	4.625	3.690-3.750	9.52
MS9818-50	4.750	3.815-3.875	9.74
MS9818-51	4.875	3.940-4.000	9.97
MS9818-52	5.000	4.065-4.125	10.20
MS9818-53	5.125	4.190-4.250	10.42
MS9818-54	5.250	4.315-4.375	10.65
MS9818-55	5.375	4.440-4.500	10.87
MS9818-56	5.500	4.565-4.625	11.10
MS9818-57	5.625	4.690-4.750	11.32
MS9818-58	5.750	4.815-4.875	11.54
MS9818-59	5.875	4.940-5.000	11.76
MS9818-60	6.000	5.065-5.125	11.99

1. SHANK SHALL BE STRAIGHT WITHIN .003 TOTAL PER INCH OF BOLT LENGTH.
2. THE CONCENTRICITY OF THREAD PD IN RELATION TO THE SHANK SHALL BE WITHIN .006 FIR.
3. THE CONCENTRICITY OF THE SHANK IN RELATION TO THE WASHER FACE DIAMETER AND HEXAGON SHALL BE WITHIN .015 FIR.
4. INCOMPLETE THREADS NOT TO ENTER FILLET.
5. MATERIAL: CORROSION RESISTANT STEEL AMS 5643.
6. HARDNESS: ROCKWELL C32-38.
7. MANUFACTURING SPECIFICATION: AMS 7474.
8. FLUORESCENT PENETRANT INSPECTION PER AMS 2645.
9. SURFACE TEXTURE: USAS B46.1-1962. UNLESS OTHERWISE SPECIFIED, SURFACES TO BE 125 MICROINCHES EXCEPT UPSET HEAD.
10. BREAK SHARP EDGES .003-.015 UNLESS OTHERWISE SPECIFIED.
11. DIMENSIONS IN INCHES. UNLESS OTHERWISE SPECIFIED. TOLERANCES: LINEAR DIMENSIONS ±.010, ANGULAR DIMENSIONS ±5°.
12. DO NOT USE UNASSIGNED PART NUMBERS.

(B) REINSTATED 31 OCT 84

AS & AMS ARE SOCIETY OF AUTOMOTIVE ENGINEERS, INC. PUBLICATIONS.
THIS STANDARD WAS DEVELOPED COOPERATIVELY WITH THE MILITARY SERVICES BY THE SAE AEROSPACE PART STANDARDS DIV.

APPROVED 11 MAR 70 REVISED (A) 21 DEC 83 (B) 31 OCT 84

(B) Review activities: AIR FORCE-82 DLA-IS

This military standard is approved for use by all Departments and Agencies of the Department of Defense. Selection for all new engineering and design applications and for repetitive use shall be made from this document when applicable.

P.A. AS	INTERNATIONAL INTEREST	TITLE	MILITARY STANDARD
Other Cust (B) AV 99	(B)	BOLT, MACHINE - HEXAGON HEAD, DRILLED, 1 HOLE, PD SHANK, AMS 5643, .3125-24 UNJF-3A	MS9818
PROCUREMENT SPECIFICATION NONE		SUPERSEDES:	PAGE 1 OF 1

5306-0886

DD FORM 672-1 (Coordinated) PREVIOUS EDITIONS OF THIS FORM ARE OBSOLETE

☆U.S. GOVERNMENT PRINTING OFFICE: 1985 — 505-038/20586