Downloaded from http://www.everyspec.com

MS9683 (ASG)

FED. SUP CLASS 5306

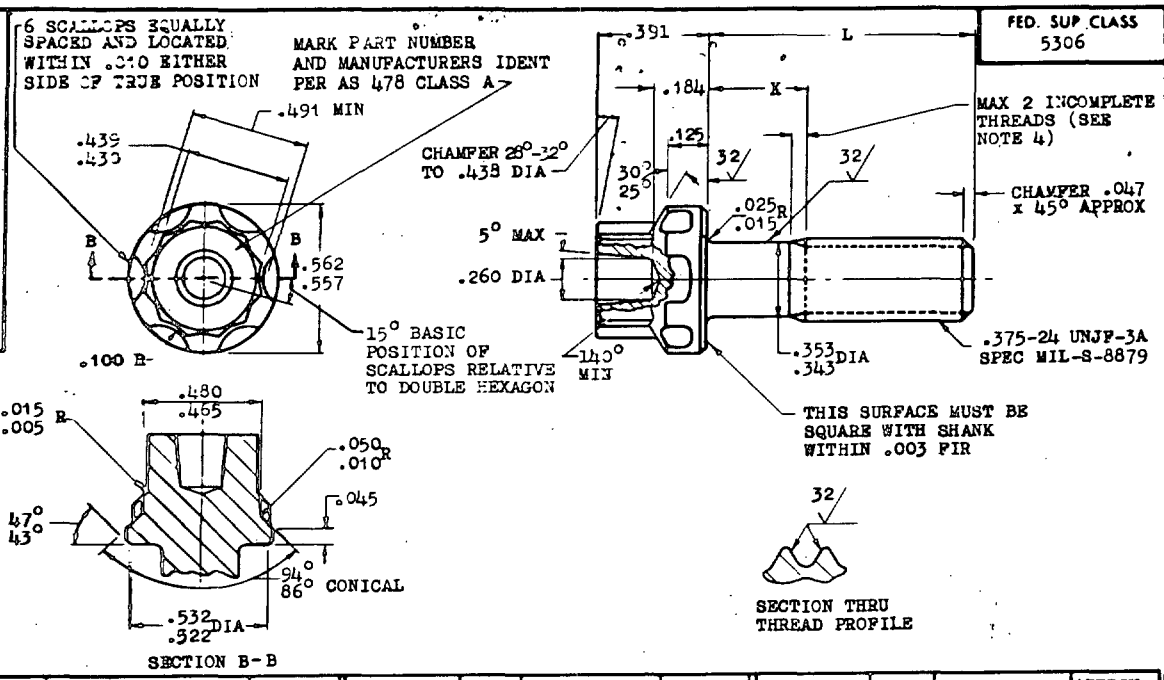

PART NUMBER	L	K	APPROX WEIGHT LB/100	PART NUMBER	L	K	APPROX WEIGHT LB/100	PART NUMBER	L	K	APPROX WEIGHT LB/100
				MS9683-18	1.500	.440- .500	5.42	MS9683-39	3.875	2.815-2.875	11.80
				MS9683-19	1.562	.502- .562	5.59	MS9683-40	4.000	2.940-3.000	12.13
				MS9683-20	1.625	.565- .625	5.76	MS9683-41	4.125	3.065-3.125	12.46
				MS9683-21	1.688	.628- .688	5.93	MS9683-42	4.250	3.190-3.250	12.79
				MS9683-22	1.750	.690- .750	6.10	MS9683-43	4.375	3.315-3.375	13.12
MS9683-02	.500	.028- .108	2.76	MS9683-23	1.875	.815- .875	6.43	MS9683-44	4.500	3.440-3.500	13.55
MS9683-03	.562	.028- .108	2.92	MS9683-24	2.000	.940-1.000	6.77	MS9683-45	4.625	3.565-3.625	13.89
MS9683-04	.625	.028- .108	3.08	MS9683-25	2.125	1.065-1.125	7.10	MS9683-46	4.750	3.690-3.750	14.22
MS9683-05	.688	.028- .108	3.24	MS9683-26	2.250	1.190-1.250	7.44	MS9683-47	4.875	3.815-3.875	14.55
MS9683-06	.750	.028- .108	3.40	MS9683-27	2.375	1.315-1.375	7.77	MS9683-48	5.000	3.940-4.000	14.89
MS9683-07	.812	.028- .108	3.56	MS9683-28	2.500	1.440-1.500	8.10	MS9683-49	5.125	4.065-4.125	15.23
MS9683-08	.875	.028- .108	3.73	MS9683-29	2.625	1.565-1.625	8.44	MS9683-50	5.250	4.190-4.250	15.56
MS9683-09	.938	.028- .108	3.90	MS9683-30	2.750	1.690-1.750	8.78	MS9683-51	5.375	4.315-4.375	15.89
MS9683-10	1.000	.028- .108	4.07	MS9683-31	2.875	1.815-1.875	9.12	MS9683-52	5.500	4.440-4.500	16.22
MS9683-11	1.062	.028- .108	4.24	MS9683-32	3.000	1.940-2.000	9.46	MS9683-53	5.625	4.565-4.625	16.55
MS9683-12	1.125	.028- .125	4.41	MS9683-33	3.125	2.065-2.125	9.79	MS9683-54	5.750	4.690-4.750	16.89
MS9683-13	1.188	.128- .188	4.57	MS9683-34	3.250	2.190-2.250	10.13	MS9683-55	5.875	4.815-4.875	17.23
MS9683-14	1.250	.190- .250	4.74	MS9683-35	3.375	2.315-2.375	10.46	MS9683-56	6.000	4.940-5.000	17.57
MS9683-15	1.312	.252- .312	4.91	MS9683-36	3.500	2.440-2.500	10.80				
MS9683-16	1.375	.315- .375	5.09	MS9683-37	3.625	2.565-2.625	11.13				
MS9683-17	1.438	.378- .438	5.26	MS9683-38	3.750	2.690-2.750	11.46				

1. SHANK SHALL BE STRAIGHT WITHIN .0025 FIR PER INCH OF BOLT LENGTH.
2. THE CONCENTRICITY OF THREAD PD IN RELATION TO THE SHANK SHALL BE WITHIN .006 FIR.
3. THE CONCENTRICITY OF THE SHANK IN RELATION TO THE WASHER FACE DIAMETER AND DOUBLE HEXAGON OD SHALL BE WITHIN .009 FIR.
4. INCOMPLETE THREADS NOT TO ENTER FILLET.
5. MATERIAL: STEEL AMS 6322.
6. HARDNESS: ROCKWELL C26-32.
7. FINISH: CADMIUM PLATE AMS 2400. DIMENSIONS SPECIFIED ARE AFTER PLATING.
8. MAGNETIC PARTICLE INSPECTION PER AMS 2640 AFTER PLATING.
9. MANUFACTURING SPECIFICATION: AMS 7452 EXCEPT HEAD MUST BE UPSET.
10. HEAD TO SHANK FILLET SHALL BE COLD ROLLED AFTER HEAT TREATMENT TO REMOVE ALL VISUAL EVIDENCE OF GRINDING OR TOOL MARKS.
11. SURFACE ROUGHNESS: AS 291. UNLESS OTHERWISE SPECIFIED, SURFACES TO BE 125 MICROINCHES EXCEPT UPSET HEAD.
12. BREAK SHARP EDGES .003 TO .015 UNLESS OTHERWISE SPECIFIED.
13. DIMENSIONS IN INCHES. UNLESS OTHERWISE SPECIFIED, TOLERANCES: LINEAR DIMENSIONS ± .010, ANGULAR DIMENSIONS ± 5°.
14. DO NOT USE UNASSIGNED PART NUMBERS. (B) REINSTATED AFTER 27 JUN 84

AS & AMS ARE SOCIETY OF AUTOMOTIVE ENGINEERS, INC., PUBLICATIONS.
THIS STANDARD WAS DEVELOPED COOPERATIVELY WITH THE ENGINE AND PROPELLER UTILITY PARTS COMMITTEE OF THE SAE.

Review activities: AIR FORCE — 82 DLA — IS

(B) 27 JUN 84 (A) 21 DEC 83 REVISED APPROVED 18 Nov 65

This standard has been approved by the Department of the Air Force and the Department of the Navy and is mandatory for use by that activity. All other military activities are required to employ this standard where suitable.

P.A. AS (B) Other Cust 99	TITLE BOLT, MACHINE-STEEL AMS 6322, CADMIUM PLATED, DOUBLE HEXAGON EXTENDED WASHER HEAD, CUPWASHER LOCKED, .375-24 UNJF-3A	MILITARY STANDARD MS9683 (ASG)
PROCUREMENT SPECIFICATION NONE	SUPERSEDES:	PAGE 1 OF 1

DD FORM 1 APR 61 672-1 (Limited coordination) PREVIOUS EDITIONS OF THIS FORM ARE OBSOLETE 5306-0866