Downloaded from http://www.everyspec.com

FED. SUP CLASS
5306

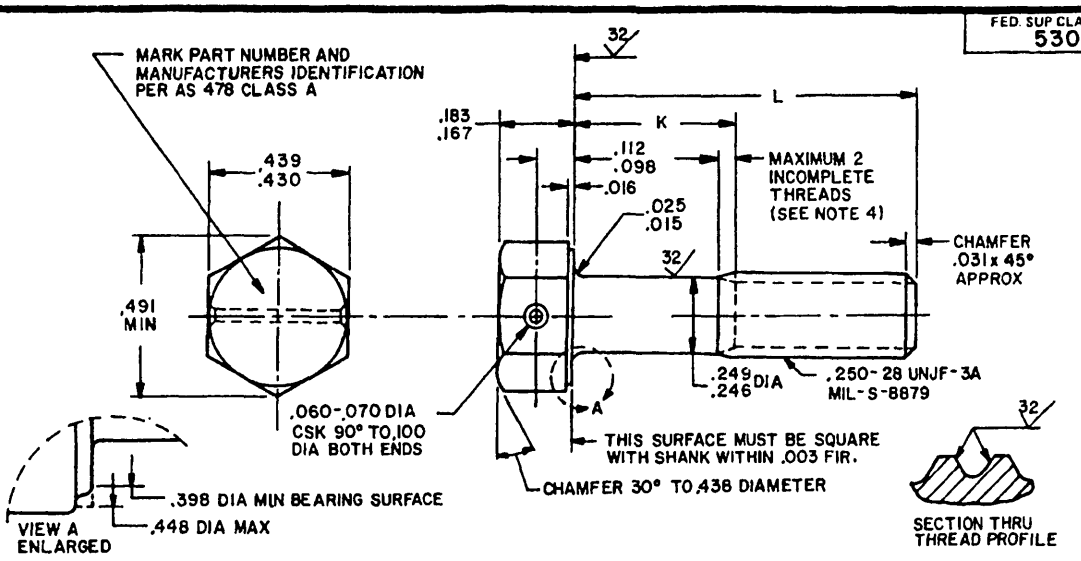

PART NUMBER	L	K	APPROX WEIGHT LB/100
MS9643-13	.938	.128- .188	1.19
MS9643-14	1.000	.190- .250	1.23
MS9643-15	1.062	.252- .312	1.27
MS9643-16	1.125	.315- .375	1.32
MS9643-17	1.188	.378- .438	1.36
MS9643-18	1.250	.440- .500	1.40
MS9643-19	1.312	.502- .562	1.44
MS9643-20	1.375	.565- .625	1.48
MS9643-21	1.438	.628- .688	1.52
MS9643-22	1.500	.690- .750	1.56
MS9643-23	1.562	.752- .812	1.60
MS9643-24	1.625	.815- .875	1.64
MS9643-25	1.688	.878- .938	1.68
MS9643-26	1.750	.940-1.000	1.72
MS9643-27	1.812	1.002-1.062	1.77
MS9643-28	1.875	1.065-1.125	1.81
MS9643-29	1.938	1.128-1.188	1.85
MS9643-30	2.000	1.190-1.250	1.89
MS9643-31	2.125	1.315-1.375	1.97
MS9643-32	2.250	1.440-1.500	2.05
MS9643-33	2.375	1.565-1.625	2.13
MS9643-34	2.500	1.690-1.750	2.21
MS9643-35	2.625	1.815-1.875	2.30

PART NUMBER	L	K	APPROX WEIGHT LB/100
MS9643-36	2.750	1.940-2.000	2.38
MS9643-37	2.875	2.065-2.125	2.46
MS9643-38	3.000	2.190-2.250	2.54
MS9643-39	3.125	2.315-2.375	2.62
MS9643-40	3.250	2.440-2.500	2.70
MS9643-41	3.375	2.565-2.625	2.78
MS9643-42	3.500	2.690-2.750	2.87
MS9643-43	3.625	2.815-2.875	2.95
MS9643-44	3.750	2.940-3.000	3.03
MS9643-45	3.875	3.065-3.125	3.11
MS9643-46	4.000	3.190-3.250	3.19
MS9643-47	4.125	3.315-3.375	3.28
MS9643-48	4.250	3.440-3.500	3.36
MS9643-49	4.375	3.565-3.625	3.43
MS9643-50	4.500	3.690-3.750	3.52
MS9643-51	4.625	3.815-3.875	3.60
MS9643-52	4.750	3.940-4.000	3.68
MS9643-53	4.875	4.065-4.125	3.76
MS9643-54	5.000	4.190-4.250	3.84
MS9643-55	5.125	4.315-4.375	3.93
MS9643-56	5.250	4.440-4.500	4.01
MS9643-57	5.375	4.565-4.625	4.09
MS9643-58	5.500	4.690-4.750	4.17
MS9643-59	5.625	4.815-4.875	4.25
MS9643-60	5.750	4.940-5.000	4.34
MS9643-61	5.875	5.065-5.125	4.42
MS9643-62	6.000	5.190-5.250	4.50

1. SHANK SHALL BE STRAIGHT WITHIN .003 TOTAL PER INCH OF BOLT LENGTH.
2. THE CONCENTRICITY OF THREAD PD IN RELATION TO THE SHANK SHALL BE WITHIN .006 FIR.
3. THE CONCENTRICITY OF THE SHANK IN RELATION TO THE WASHER FACE DIAMETER AND HEXAGON SHALL BE WITHIN .013 FIR.
4. INCOMPLETE THREADS NOT TO ENTER FILLET.
5. MATERIAL: TITANIUM AMS 4967.
6. HARDNESS: ROCKWELL C36-42.
7. MANUFACTURING SPECIFICATION: AMS 7461, EXCEPT MATERIAL AS NOTED.
8. FLUORESCENT PENETRANT INSPECTION PER AMS 2645.
9. SURFACE TEXTURE: USAS B46.1-1962. UNLESS OTHERWISE SPECIFIED, SURFACES TO BE 125 MICROINCHES, EXCEPT UPSET HEAD.
10. BREAK SHARP EDGES .003 - .015 UNLESS OTHERWISE SPECIFIED.
11. DIMENSIONS IN INCHES. UNLESS OTHERWISE SPECIFIED, TOLERANCES: LINEAR DIMENSIONS ±.010, ANGULAR DIMENSIONS ±5°.
12. DO NOT USE UNASSIGNED PART NUMBERS.

AS & AMS ARE SOCIETY OF AUTOMOTIVE ENGINEERS, INC. PUBLICATIONS.
THIS STANDARD WAS DEVELOPED COOPERATIVELY WITH THE MILITARY SERVICES BY THE SAE AEROSPACE PART STANDARDS DIVISION.

(B) REINSTATED 9 NOV 84

APPROVED 4 MAY 70 REVISED (A) 21 DEC 83 (B) 9 NOV 84

USER ACTIVITIES:

REVIEWER ACTIVITIES: (B) AIR FORCE-82 DLA-IS

This military standard is approved for use by all Departments and Agencies of the Department of Defense. Selection for all new engineering and design applications and for repetitive use shall be made from this document when applicable.

P.A.	INTERNATIONAL INTEREST	TITLE	MILITARY STANDARD
(B) AS Other Cust AV 99	(B)	BOLT, MACHINE-HEXAGON HEAD, DRILLED, 1 HOLE, FULL SHANK, TITANIUM AMS 4967, .250-28 UNJF-3A	MS9643
PROCUREMENT SPECIFICATION NONE	SUPERSEDES:		PAGE 1 OF 1

DD FORM 1 MAY 73 672-1 (COORDINATED) PREVIOUS EDITIONS OF THIS FORM ARE OBSOLETE 5306-0914