Downloaded from http://www.everyspec.com

MS9498

FED. SUP CLASS 5305

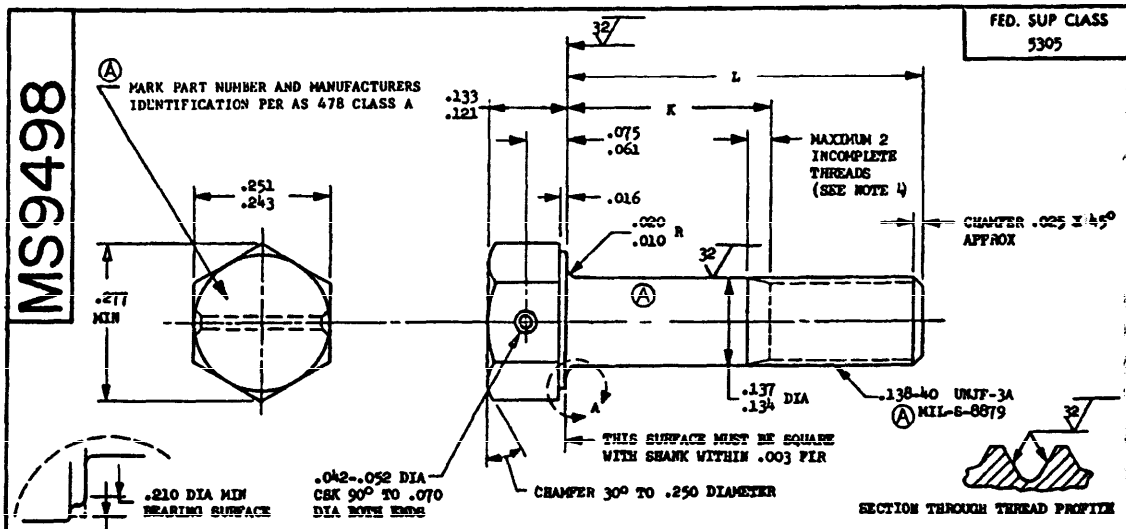

PART NUMBER	L	K	APPROX WEIGHT LB/100	PART NUMBER	L	K	APPROX WEIGHT LB/100
MS9498-02	.250	.058-.078	.28				
MS9498-03	.312	.058-.078	.31				
MS9498-04	.375	.058-.078	.34				
MS9498-05	.438	.058-.078	.36				
MS9498-06	.500	.058-.078	.39				
MS9498-07	.562	.058-.078	.41				
MS9498-08	.625	.058-.099	.44				
MS9498-09	.688	.102-.162	.47				
MS9498-10	.750	.164-.224	.49				
MS9498-11	.812	.226-.286	.52				
MS9498-12	.875	.289-.349	.54				
MS9498-13	.938	.352-.412	.57				
MS9498-14	1.000	.414-.474	.60				
MS9498-15	1.062	.476-.536	.62				
MS9498-16	1.125	.539-.599	.65				
MS9498-17	1.188	.602-.662	.67				
MS9498-18	1.250	.664-.724	.70				
MS9498-19	1.312	.726-.786	.72				
MS9498-20	1.375	.789-.849	.75				
MS9498-21	1.438	.852-.912	.78				
MS9498-22	1.500	.914-.974	.80				
MS9498-23	1.562	.976-1.036	.83				
MS9498-24	1.625	1.039-1.099	.85				
MS9498-25	1.688	1.102-1.162	.88				
Ⓐ MS9498-26	1.750	1.164-1.224	.91				
MS9498-27	1.812	1.226-1.286	.93				
MS9498-28	1.875	1.289-1.349	.96				
MS9498-29	1.938	1.352-1.412	.98				
MS9498-30	2.000	1.414-1.474	1.01				

Ⓐ 1. SHANK SHALL BE STRAIGHT WITHIN .003 TOTAL PER INCH OF SCREW LENGTH
2. THE CONCENTRICITY OF THREAD PD IN RELATION TO THE SHANK SHALL BE WITHIN .006 FIR.
3. THE CONCENTRICITY OF THE SHANK IN RELATION TO THE WASHER FACE DIAMETER AND HEXAGON SHALL BE WITHIN .009 FIR.
4. INCOMPLETE THREADS NOT TO ENTER FILLET.
5. MATERIAL: CORROSION AND HEAT RESISTANT STEEL AMS 5731.
6. MANUFACTURING SPECIFICATION: AMS 7477.
7. FLUORESCENT PENETRANT INSPECTION PER AMS 2645.
Ⓐ 8. SURFACE TEXTURE: USAS B46.1-1962 UNLESS OTHERWISE SPECIFIED SURFACES TO BE 125 MICROINCHES EXCEPT HEXAGON
9. BREAK SHARP EDGES .003-.015 UNLESS OTHERWISE SPECIFIED.
10. DIMENSIONS IN INCHES. UNLESS OTHERWISE SPECIFIED, TOLERANCES: LINEAR DIMENSIONS ± .010, ANGULAR DIMENSIONS ± 5°.
11. DO NOT USE UNASSIGNED PART NUMBERS.

AS & AMS ARE SOCIETY OF AUTOMOTIVE ENGINEERS, INC. PUBLICATIONS.
Ⓐ THIS STANDARD WAS DEVELOPED COOPERATIVELY WITH THE MILITARY SERVICES BY THE SAE AEROSPACE PART STANDARDS DIVISION

User activities:

Review activities: Army - MI, AL USAF - 82, 85

This military standard is approved by the Department of Defense and is mandatory on all activities. Selection for all new engineering and design applications and for repetitive use shall be made from this document.

APPROVED 5 May 1965 REVISED Ⓐ 17 Nov 69

P.A. USAF- 11 Other Cust Army - AV Navy - AS	INTERATIOAL INTEREST ASCC AIR STD 17/2	TITLE Ⓐ SCREW, MACHINE - HEXAGON HEAD, DRILLED, 1 HOLE, FULL SHANK, AMS 5731, .138-40 UNJF-3A	MILITARY STANDARD MS9498
PROCUREMENT SPECIFICATION NONE		SUPERSEDES:	SHEET 1 OF 1

DD FORM 1 SEP 57 672-1 (Coordinated)

PREVIOUS EDITIONS OF THIS FORM ARE OBSOLETE

☆ U. S. GOVERNMENT PRINTING OFFICE: 1970-393-093/S-3738