Downloaded from http://www.everyspec.com

NOTICE—When Government drawings, specifications, or other data are used for any purpose other than in connection with a definitely related Government procurement operation the United States Government thereby incurs no responsibility, nor any obligation whatsoever, and the fact that the Government may have formulated furnished, or in any way supplied the said drawings, specifications or other data is not to be regarded by implication or otherwise as in any manner licensing the holder or any other person or corporation, or conveying any rights or permission to manufacture use, or sell any patented invention that may in any way be related thereto

is standard has been approved by the Department of the Air Force (11) and the partment of the Navy and is mandatory for use by of activity All other military activities are required employ this standard where suitable

MS9112 (ASG)

FED SUP CLASS
5305

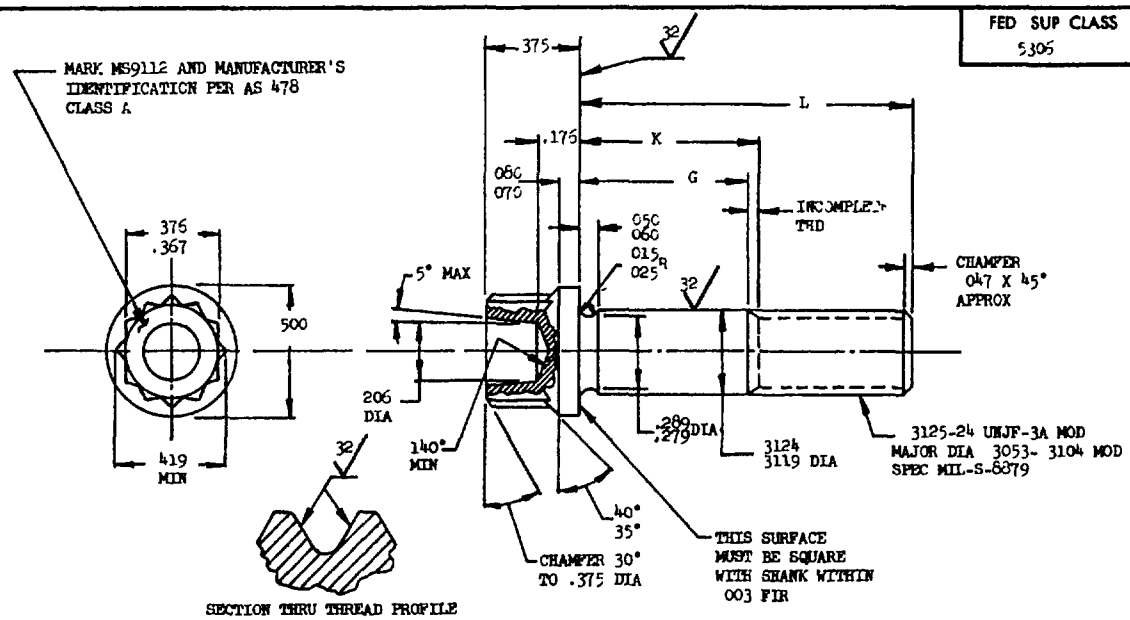

PART NO.	G GRIP	L LENGTH	K MAX	APPROX WEIGHT LB/100
MS9112-01	.125	.656	.218	2.81
MS9112-02	.125	.719	.218	2.93
MS9112-03	.125	.781	.218	3.04
MS9112-04	.125	.844	.218	3.16
MS9112-05	.188	.906	.281	3.29
MS9112-06	.250	.969	.343	3.43
MS9112-07	.312	1.031	.405	3.56
MS9112-08	.375	1.094	.468	3.70
MS9112-09	.437	1.156	.530	3.84
MS9112-10	.500	1.219	.593	3.97
MS9112-11	.562	1.281	.655	4.11
MS9112-12	.625	1.344	.718	4.25
MS9112-13	.688	1.407	.781	4.38
MS9112-14	.750	1.469	.843	4.52
MS9112-15	.812	1.531	.905	4.65

PART NO	G GRIP	L LENGTH	K MAX	APPROX WEIGHT LB/100
MS9112-16	.875	1.594	.968	4.79
MS9112-17	.937	1.656	1.030	4.93
MS9112-18	1.000	1.719	1.093	5.07
MS9112-19	1.125	1.844	1.218	5.34
MS9112-20	1.250	1.969	1.343	5.61
MS9112-21	1.375	2.094	1.468	5.88
MS9112-22	1.500	2.219	1.593	6.16
MS9112-23	1.625	2.344	1.718	6.43
MS9112-24	1.750	2.469	1.843	6.70
MS9112-25	1.875	2.594	1.968	6.97
MS9112-26	2.000	2.719	2.093	7.25
MS9112-27	2.125	2.844	2.218	7.52
MS9112-28	2.250	2.969	2.343	7.79
MS9112-29	2.375	3.094	2.468	8.07
MS9112-30	2.500	3.219	2.593	8.34
MS9112-31	2.625	3.344	2.718	8.61
MS9112-32	2.750	3.469	2.843	8.88

1. SHANK SHALL BE STRAIGHT WITHIN .0015 FIR PER INCH OF BOLT LENGTH
2. SHANK SHALL BE CONCENTRIC WITH THREAD PD WITHIN .006 FIR, WITH THREAD MAJOR DIAMETER WITHIN .001 FIR, AND WITH WASHER FACE DIAMETER AND DOUBLE HEXAGON WITHIN .015 FIR.
3. MATERIAL. CORROSION AND HEAT RESISTANT STEEL AMS 5731
4. MANUFACTURING SPECIFICATION AMS 7477.
5. SURFACE ROUGHNESS AS 291, UNLESS OTHERWISE SPECIFIED, SURFACES TO BE 125 MICROINCHES.
6. PART SUBJECT TO FLUORESCENT PENETRANT INSPECTION PER AMS 2645.
7. BREAK SHARP EDGES .003 - .015 UNLESS OTHERWISE SPECIFIED.
8. DIMENSION INCHES. UNLESS OTHERWISE SPECIFIED, TOLERANCES: LINEAR DIMENSIONS ± .010, ANGULAR DIMENSIONS ±5°
9. DO NOT USE UNASSIGNED PART NUMBERS

AS & AMS ARE SOCIETY OF AUTOMOTIVE ENGINEERS, INC PUBLICATIONS
THIS STANDARD WAS DEVELOPED COOPERATIVELY WITH THE ENGINE AND PROPELLER UTILITY PARTS COMMITTEE OF THE SAE

APPROVED 14 JAN 65 REVISED

P.A USAF - 11 Other Cust Navy - WP	TITLE BOLT, MACHINE - DOUBLE HEXAGON EXTENDED WASHER HEAD, CLOSE TOLERANCE SHANK, AMS 5731. .3125-24 UNJF-3A	MILITARY STANDARD MS9112 (ASG)
PROCUREMENT SPECIFICATION	SUPERSEDES:	SHEET 1 OF 1