Downloaded from http://www.everyspec.com

FED. SUP CLASS.
5310

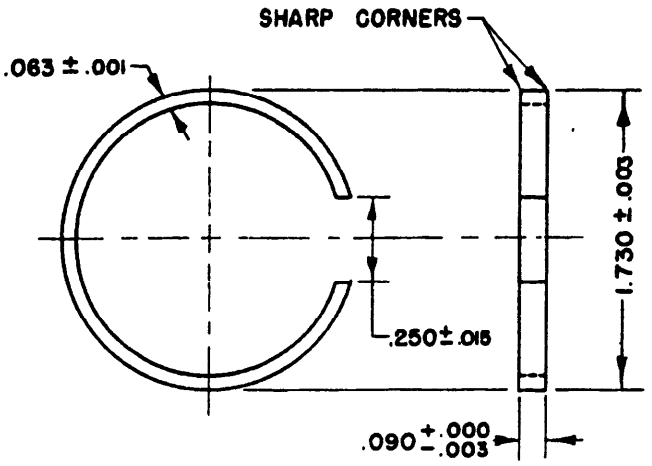

PART NO. MS91612-1

MATERIAL: PHOSPHOR BRONZE

NOTES:

1. All dimensions in inches.

2. Referenced specification shall be of the issue in effect on date of invitation for bids.

THIS PART IS FOR DESIGN USE ONLY AND IS NOT TO BE STOCKED OR CATALOGUED.

APPROVED 21 Sept. 1954 REVISED

CUSTODIAN: Army-Signal Corps, Navy-Bureau of Ships, Air Force	MILITARY STANDARD	MS 91612
PROCUREMENT SPECIFICATION MIL-C-3650	WASHER, SPRING TENSION; SERIES LC CONNECTORS	SHEET 1 OF 1

MS Form 233 1 Nov 50

Other interest: Army - O, Navy AMCOrS

☆ U.S. GOVERNMENT PRINTING OFFICE: 1974-603-110/1636

NOTICE: When Government drawings, specifications, or other data are used for any purpose other than in connection with a definitely related Government procurement operation, the United States Government thereby incurs no responsibility, nor any obligation whatsoever; and the fact that the Government may have formulated, furnished, or in any way supplied the said drawings, specifications, or other data is not to be regarded by implication or otherwise as in any manner licensing the holder or any other person or corporation, or conveying any rights or permission to manufacture, use, or sell any patented invention that may in any way be related thereto.