Downloaded from http://www.everyspec.com

FED. SUP CI
5306

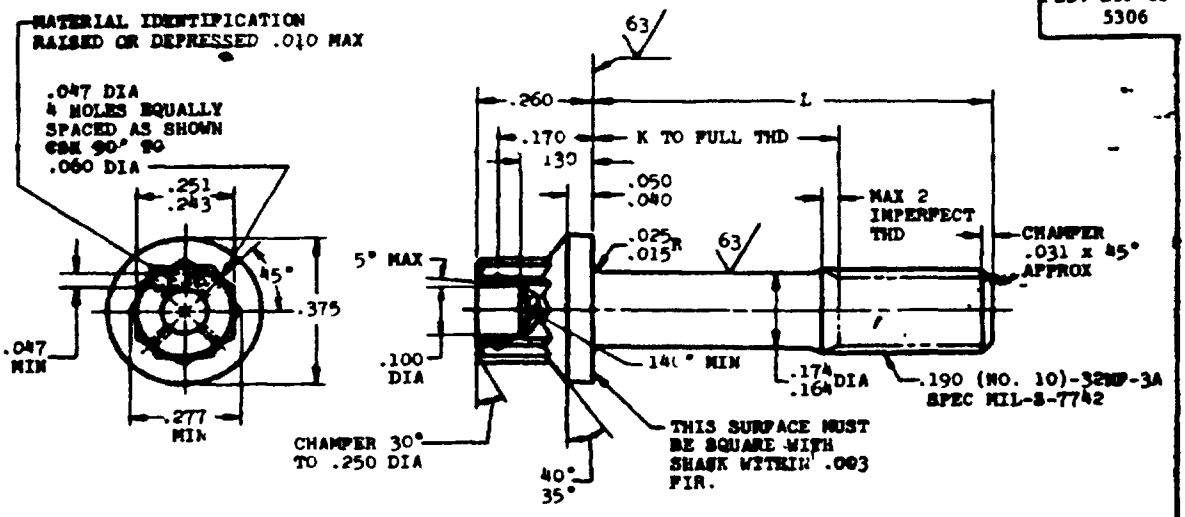

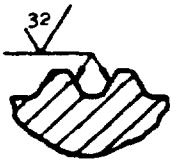

SECTION THRU THREAD PROFILE

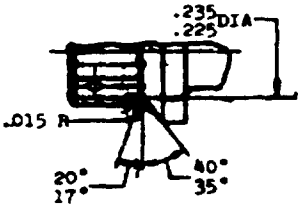

OPTIONAL SHAPE OF HEAD

Ⓐ **INACTIVE FOR DESIGN AFTER 28 Feb 1984**
FOR PARTS WITH MIL-S-8879 SCREW THREADS SEE MS9923

PART NO.	L	K +.000 -.060	APPROX WEIGHT LBS/100	PART NO.	L	K +.000 -.060	APPROX WEIGHT LBS/100	PART NO.	L	K +.000 -.060	APPROX WEIGHT LBS/100
MS9088-05	.438	1/	.95								
MS9088-06	.500	1/	.99	MS9088-23	1.562	.938	1.67				
MS9088-07	.562	1/	1.03	MS9088-24	1.625	1.000	1.71				
MS9088-08	.625	1/	1.07	MS9088-25	1.638	1.062	1.75				
MS9088-09	.638	1/	1.11	MS9088-26	1.750	1.125	1.79				
MS9088-10	.750	1/	1.15	MS9088-27	1.875	1.250	1.87				
MS9088-11	.812	.188	1.19	MS9088-28	2.000	1.375	1.95				
MS9088-12	.875	.250	1.23	MS9088-29	2.125	1.500	2.03				
MS9088-13	.938	.312	1.27	MS9088-30	2.250	1.625	2.11				
MS9088-14	1.000	.375	1.31	MS9088-31	2.375	1.750	2.19				
MS9088-15	1.062	.438	1.35	MS9088-32	2.500	1.875	2.27				
MS9088-16	1.125	.500	1.39	MS9088-33	2.625	2.000	2.35				
MS9088-17	1.188	.562	1.43	MS9088-34	2.750	2.125	2.43				
MS9088-18	1.250	.625	1.47	MS9088-35	2.875	2.250	2.51				
MS9088-19	1.312	.688	1.51	MS9088-36	3.000	2.375	2.59				
MS9088-20	1.375	.750	1.55								
MS9088-21	1.438	.812	1.59								
MS9088-22	1.500	.875	1.63								

1/ THREAD TO HEAD MAXIMUM TWO IMPERFECT THREADS

NOTES

1 SHANK SHALL BE STRAIGHT WITHIN .003 FIR PER INCH OF BOLT LENGTH
2 THE CONCENTRICITY OF THREAD PD IN RELATION TO THE SHANK SHALL BE WITHIN .006 FIR
3. THE CONCENTRICITY OF THE SHANK IN RELATION TO THE WASHER FACE DIAMETER AND 12 POINT OD SHALL BE WITHIN .011 FIR
4 MATERIAL STEEL AMS 6322
5 HARDNESS ROCKWELL C26-32
6. FINISH CADMIUM PLATE AMS 2400 DIMENSIONS SPECIFIED ARE AFTER PLATING
7 SURFACE ROUGHNESS AS 291
8 MANUFACTURING SPECIFICATION AMS 7452 PARTS SUBJECT TO MAGNETIC PARTICLE INSPECTION PER AMS 2640
9 BREAK SHARP EDGES .003-.015 UNLESS OTHERWISE SPECIFIED
10 DIMENSIONS IN INCHES UNLESS OTHERWISE SPECIFIED
11 TOLERANCES, LINEAR DIMENSIONS ± .010, ANGULAR DIMENSIONS ±5

DO NOT USE UNASSIGNED PART NUMBERS

Ⓐ REVISED AND REDRAWN

THIS STANDARD WAS DEVELOPED COOPERATIVELY WITH THE ENGINE AND PROPELLER UTILITY PARTS COMMITTEE OF THE SAE.

APPROVED 25 Apr 57 REVISED 28 Feb 84

P.A. 11 OTHER CUST AS PROCUREMENT SPECIFICATION NONE	**MILITARY STANDARD** BOLT, MACHINE STEEL DRILLED 12 POINT HEAD 190 (NO 10)-32 (CADMIUM PLATE)	**MS9088** SHEET 1 OF 1

DD FORM 1 OCT 60 233

5306-0662

User activities:

Review activities:
HI
19

This military standard is approved for use by all Departments and Agencies of the Department of Defense. Selection for all new engineering and design applications and for repetitive use shall be made from this document, unless specified.