Downloaded from http://www.everyspec.com

FED. SUP CLASS
2320

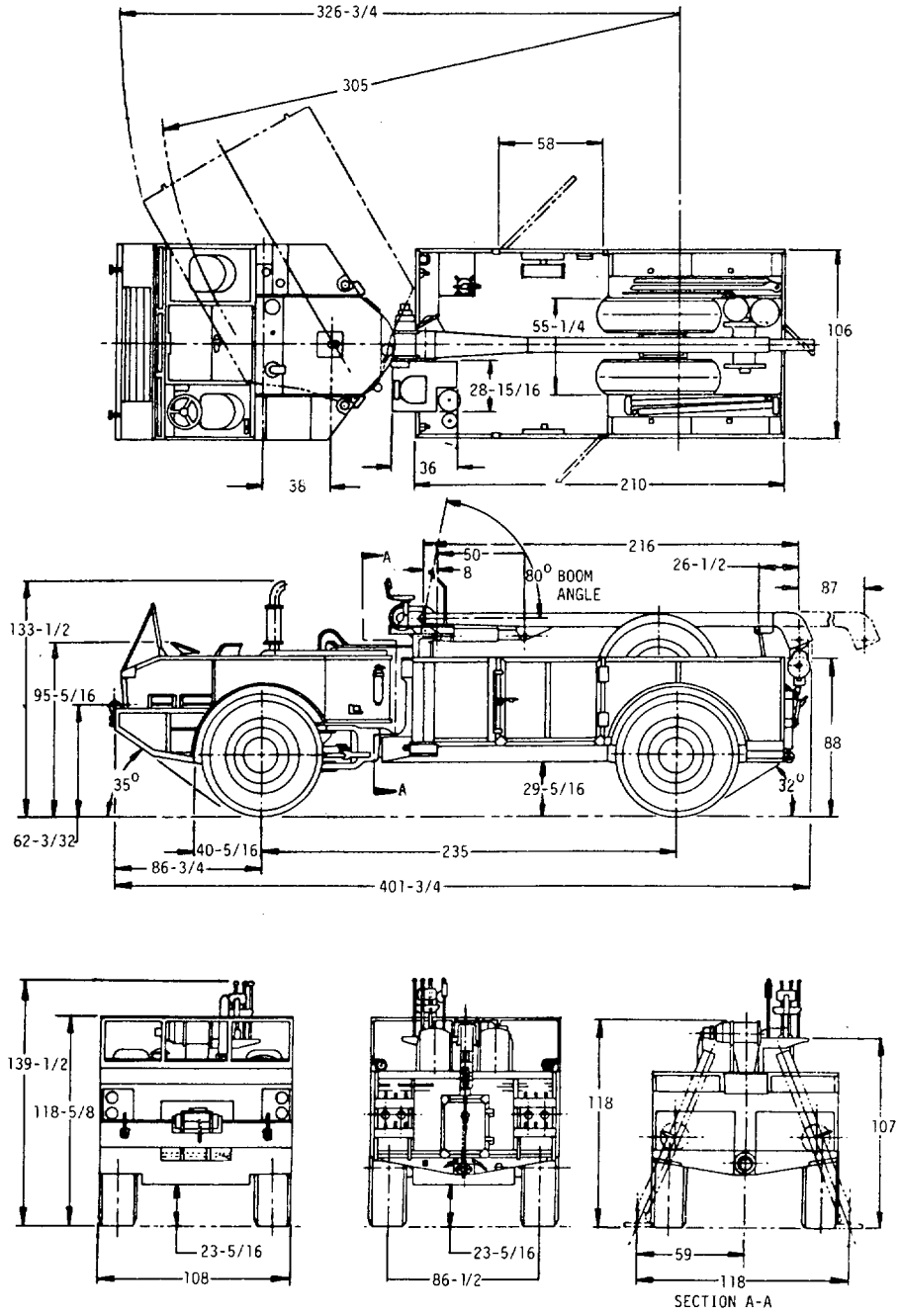

USER ACTIVITIES:

REVIEWER ACTIVITIES:

This military standard is approved for use by the US Army Tank-Automotive Command, Department of the Army, and is available for use by all Departments and Agencies of the Department of Defense.

APPROVED 8 OCTOBER 1969 REVISED © 15 JAN 85

© ENTIRE STANDARD REVISED

MS PART NO.	ENGINEERING DWG NO
MS52113-1	11614318

P. A. ARMY-AT Other Cust	INTERNATIONAL INTEREST	TITLE TRUCK, WRECKER, 10 TON, 4X4, MILITARY DESIGN, M 553	MILITARY STANDARD MS52113(AT)
PROCUREMENT SPECIFICATION MIL-T-62131	SUPERSEDES:		SHEET 1 OF 2

DD FORM 1 MAY 73 672-1 LIMITED COORDINATION

PREVIOUS EDITIONS OF THIS FORM ARE OBSOLETE

Downloaded from http://www.everyspec.com

FED. SUP CLASS
2320

VEHICLE CHARACTERISTICS

MODEL M553; TRUCK WRECKER 11614318

GROSS VEHICLE WEIGHT; FULLY EQUIPPED

	WO/PAYLOAD	W/PAYLOAD
FRONT AXLE	20500 LBS	23280 LBS
REAR AXLE	17370 LBS	22500 LBS
TOTAL	37870 LBS	45780 LBS

TOWING CAPACITY: 20000 LBS

MINIMUM TURNING DIA: WALL TO WALL 52.7FT.

BODY ASSY, FRONT		11614753
BODY ASSY, REAR		11614883
DOOR ASSY; L.H.		11614495
DOOR ASSY, R.H.		11614500
DOOR ASSY, REAR		11614697
MIRROR REARVIEW	INST'N	11614884
WINDSHIELD AND FRAME	INST'N	11614950
DRIVE SHAFT, REAR	INST'N	11614935

POWER PLANT: INST'N 11614404
ENGINE DIESEL;
CYLINDERS-6, DISPLACEMENT 638 CU. IN.
BORE AND STROKE, 4.75 X 6.00 IN.COMPRESSION RATIO 17.5:1 FUELS DIESEL, JP4, FURNACE #2
LUBE CAPACITY 26 QTS, FUEL TANK CAPACITY 106 GALLONS.
BHP. MAX. GROSS 213 MAX. NET 192 @ 2200 RPM.
COOLING SYSTEM CAPACITY 104 QTS.
TORQUE MAX. GROSS 578 FT. LBS, MAX. NET 547 @ 1550 RPM.

POWER PLANT ASSY;		11681062
POWER TRAIN, FRONT	INST'N	11614402
POWER TRAIN, REAR	INST'N	11614403
HITCH AND PIVOT	INST'N	11614300
AIR CLEANER, ENGINE	INST'N	11614943
RADIATOR	INST'N	11614941
FUEL SYSTEM	INST'N	11614949
EXHAUST EXTENSION	INST'N	11614942
LINES, VALVE AND MOTOR	INST'N	11624378

CRANE;	INST'N	11620400
BOOM SUPPORT;	INST'N	11614930

LIFTING CAPACITY:

AT 16 FT RADIUS, MINIMUM		10000 LBS
AT 11 FT RADIUS, MINIMUM		15000 LBS
AT 6 FT RADIUS, MINIMUM		20000 LBS
OUTRIGGER	INST'N	11614459

ELECTRICAL SYSTEM: FRONT	INST'N	11632950
24 VOLT SYSTEM, REAR	INST'N	11614992
STARTER		MS53011-2
ALTERNATOR ASSY		10929868
WIRING DIAGRAM TRACTOR		11632955
WIRING DIAGRAM TRAILER		11614951

WINCH HYDRAULIC, REAR;	INST'N	11614928
WINCH CAPACITY 45000		11614933
CABLE 0.88 DIA.		300 FT
PINTLE 40000 LB. CAPACITY		7722050
WINCH AND GEAR, FRONT	INST'N	11635124
WINCH, FRONT 10000 LB.		7538687
CABLE 0.5 IN.DIA.200FT.		

TIRES: 18.00x33 10 PLY FOUR		11618762
RIM 33.00X13.00 FOUR		11681132
VALVE: TIRE FOUR		ZZ-V-25
RING: WHEEL FOUR		11681133
TIRE AND RIM ASSY. FOUR		11681140

GENERAL:

STEERING GEAR	INST'N	11614610
STEERING LINKAGE	INST'N	11614948
STEERING PUMP, TAN, AND LINES	INST'N	11614947
STEERING CYLINDER;	INST'N	11614672
BILGE PUMP, FRONT	INST'N	11614878
BILGE PUMP, REAR	INST'N	11614937
MIN RATE 46 GPM AS INSTALLED		
CANOPY, FRONT:	INST'N	11614944
CANOPY, FRAME, FRONT	INST'N	11614945
CANOPY, FRAME, REAR	INST'N	11614938
COMPARTMENT, OPERATOR	INST'N	11650956
COMPARTMENT, COMPANION	INST'N	11650955
AIR SYSTEM, FRONT	INST'N	11614881
AIR SYSTEM, REAR	INST'N	11614936
FAN AND DRIVE	INST'N	11614965
FAIRLEAD	INST'N	11614931
GAGE AND PANEL	INST'N	11614882
STENCIL AND STOWAGE	INST'N	11618351
STOWAGE, TOOLS AND EQUIPMENT		11618101
CONTROL, GOVERNOR	INST'N	11614810
CONTROL HYD. WINCH	INST'N	11614934
CONTROL, PARKING BRAKE	INST'N	11620027
CONTROL, TRANSMISSION	INST'N	11614880
CONTROL, WINCH	INST'N	11620323
HYDRAULIC OIL COOLER	INST'N	11614932
HYDRAULIC SYSTEM	INST'N	11614927

ACCESSORIES AND KITS:

PERSONNEL HEATER	INST'N	11614956
SHIPPING AND STOWAGE KIT		11632925
REAR CANOPY KIT		11614938
ARCTIC KIT		11614988
ARCTIC KIT, CRANE CAB		11614987
GUN RING MOUNTING KIT		11614953
INFRARED FILTER KIT		11624639
TIRE CHAIN ASSY		11632607

PERFORMANCE: MIN. 2.5 MPH, MAX. 30.5 MPH

FUEL CONSUMPTION: W/TYPE 2 DIESEL
HIGHWAY, AVERAGE 3.23 MPG,

CRUISING RANGE: 300 MILES

ACCELERATION: 0 TO 20 MPH IN 12.2 SECONDS.

NOTES:
1. DIMENSIONS ARE IN INCHES AND ARE SHOWN FOR ENGINEERING REFERENCE ONLY.
2. REFERENCED DOCUMENTS SHALL BE OF THE ISSUE IN EFFECT ON DATE OF INVITATIONS FOR BID.
3. THIS VEHICLE SHALL BE IN ACCORDANCE WITH REFERENCED ENGINEERING DRAWINGS, COPIES WHICH MAY BE OBTAINED FROM: US ARMY TANK-AUTOMOTIVE COMMAND, WARREN, MICH. 48090.

© ENTIRE STANDARD REVISED

MS PART NO.	ENGINEERING DWG NO
MS52113-1	11614318

APPROVED 8 OCTOBER 1969 REVISED © 15 JAN 85

P. A. ARMY-AT Other Cust	INTERNATIONAL INTEREST	TITLE TRUCK, WRECKER, 10 TON, 4X4, MILITARY DESIGN, M 553	MILITARY STANDARD MS52113(AT)
PROCUREMENT SPECIFICATION MIL-T-62131	SUPERSEDES:		SHEET 2 OF 2

DD FORM 1 MAY 73 672-1 LIMITED COORDINATION

PREVIOUS EDITIONS OF THIS FORM ARE OBSOLETE

USER ACTIVITIES:
REVIEWER ACTIVITIES:
This military standard is approved for use by the US Army Tank-Automotive Command, Department of the Army, and is available for use by all Departments and Agencies of the Department of Defense.