Downloaded from http://www.everyspec.com

FED. SUP CLASS
2320

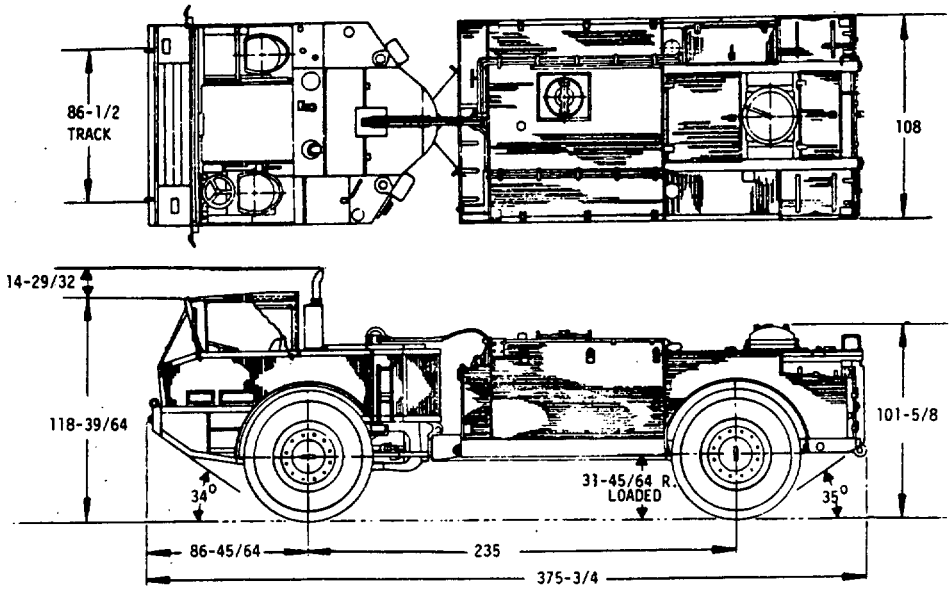


USER ACTIVITIES:

REVIEWER ACTIVITIES:

This military standard is approved for use by the US Army Tank-Automotive Command, Department of the Army, and is available for use by all Departments and Agencies of the Department of Defense.

APPROVED 30 SEPT 1969 REVISED © 15 JAN 85

© ENTIRE STANDARD REVISED

| MS PART NO. | ENGINEERING DWG NO |
|---|---|
| MS52112-1 | 11614319 |

| P. A. ARMY-AT Other Cust | INTERNATIONAL INTEREST | TITLE TRUCK, TANK, FUEL-SERVICING, 2500 GALLON, 4X4, MILITARY DESIGN, M 559 | MILITARY STANDARD MS52112(AT) |
|---|---|---|---|
| PROCUREMENT SPECIFICATION MIL-T-62248 | SUPERSEDES: | | SHEET 1 OF 2 |

DD FORM 1 MAY 73 672-1 LIMITED COORDINATION

PREVIOUS EDITIONS OF THIS FORM ARE OBSOLETE

Downloaded from http://www.everyspec.com

FED. SUP CLASS
2320

## VEHICLE CHARACTERISTICS

MODEL M559: TRUCK, TANK 11614319

GROSS VEHICLE WEIGHT: FULLY EQUIPPED

| | WO/PAYLOAD | W/PAYLOAD |
|---|---|---|
| FRONT AXLE | 17425 LBS | 23770 LBS |
| REAR AXLE | 10675 LBS | 22780 LBS |
| TOTAL | 28100 LBS | 46550 LBS |

TOWING CAPACITY: 20000 LBS

MINIMUM TURNING DIA: WALL TO WALL 52.7 FT.

GENERAL:

| | | |
|---|---|---|
| BODY ASSY, FRONT | | 11614753 |
| BODY ASSY, REAR | | 11614954 |
| WINSHIELD AND FRAME | INST'N | 11614950 |
| OPERATOR COMPARTMENT | INST'N | 11650956 |
| COMPANION COMPARTMENT | INST'N | 11650955 |
| FRONT AIR SYSTEM | INST'N | 11614963 |
| REAR AIR SYSTEM | INST'N | 11614952 |
| GAGE AND PANEL | INST'N | 11620146 |
| STENCIL AND STOWAGE | INST'N | 11618352 |
| VALVE CONTROL | INST'N | 11624435 |
| FRONT BILGE PUMP | INST'N | 11614878 |
| REAR BILGE PUMP | INST'N | 11624553 |

POWER PLANT: INST'N 11614404

ENGINE DIESEL;
BORE AND STROKE; 4.75 X 6.00 IN. COMPRESSION RATIO 17.5:1
FUEL: DIESEL JP4, FURNACE #2
LUBE CAPACITY 26 QTS, FUEL TANK CAPACITY 106 GALLONS.
BHP MAX. GROSS 213 MAX. NET 192 @ 2200 RPM.
TORQUE MAX. GROSS 578 FT. LBS, MAX NET 547 @ 1550 RPM.
COOLING SYSTEM CAPACITY 104 QTS.

| | | |
|---|---|---|
| POWER PLANT ASSY. | | 11681062 |
| TRANSMISSION CONTROL | INST'N | 11614880 |
| TRANSMISSION AND CASE ASSY. | | 11635131 |
| PUMP ASSY, TRANSMISSION. | | 11623910 |
| OIL FILTER ASSY. | | 11620782 |
| OIL LINES | INST'N | 11624192 |
| HARNESS ASSY, WIRING | | 11617914 |
| SUMP ASSY, OIL | | 11624024 |
| ENGINE AIR CLEANER | INST'N | 11614943 |
| FAN AND DRIVE | INST'N | 11614965 |
| V-BELT SET | | MS51068-30-2 |
| RADIATOR | INST'N | 11614941 |
| FUEL SYSTEM | INST'N | 11614949 |
| EXHAUST EXTENSION | INST'N | 11614942 |
| GOVERNOR CONTROL | INST'N | 11614810 |
| REAR HYDRAULIC | INST'N | 11632543 |
| FUEL DISPENSING | INST'N | 11618588 |
| EMERGENCY VALVE | INST'N | 11632592 |

STEERING GEAR: INST'N 11614610

| | | |
|---|---|---|
| STEERING PUMP TANK AND LINES | INST'N | 11614989 |
| STEERING LINKAGE | INST'N | 11614948 |

| | | |
|---|---|---|
| ELECTRICAL SYSTEM: FRONT | INST'N | 11632946 |
| ELECTRICAL SYSTEM, REAR | INST'N | 11614990 |
| SWIVEL, HYDRAULIC | INST'N | 11620156 |
| HITCH AND PIVOT | INST'N | 11614300 |
| AFBMA BR'G. REF. 93825-93125 ONE | | 712969 |
| 93800-93125 TWO | | 712964 |
| ELECTRICAL CONDUIT | INST'N | 11632346 |

MIRROR: REAR VIEW TWO MS53015-2 INST'N 11614884

| | | |
|---|---|---|
| BRACKET; LH | | 11620896 |
| RH | | 11620887 |
| ARM, TWO | | 11620889 |

| | | |
|---|---|---|
| POWER TRAIN: FRONT | INST'N | 11614402 |
| POWER TRAIN, REAR | INST'N | 11614403 |
| DIFFERENTIAL ASSY, FRONT | | 11614985 |
| DIFFERENTIAL ASSY, REAR | | 11614885 |
| UNIVERSAL JOINT ASSY. | | 11621067 |
| CLUTCH | INST'N | 11615127 |
| AXLE ASSY; -1, -2, -3, THREE | | 11614876 |
| DRIVE AND GEAR | INST'N | 11614525 |
| DRIVE SHAFT, REAR | INST'N | 11633038 |

TIRES:

| | |
|---|---|
| TIRE AND RIM ASSY, FOUR | 11681140 |
| TIRE 18.00X33 TEN PLY, FOUR | 11618762 |
| RIM ASSY; 33 X 13 FOUR | 11681132 |
| RING WHEEL, FOUR | 11681133 |
| HUB ASSY. WHEEL, FOUR | 11614904 |
| DRUM, FOUR | 11614906 |
| SPINDLE FINAL DRIVE, FOUR | 11614369 |
| WHEEL BEARING INNER, FOUR | 712647 |
| REF. AFBMA | 68461-68712 |
| WHEEL BEARING, OUTER, FOUR | MS19081-173 |
| REF AFBMA | 36690-366208 |
| SEAL, OUTER | 11614353 |
| RETAINER, SEAL | 11614372 |
| SEAL, INNER | 11602679 |

BRAKES:

| | | |
|---|---|---|
| ASSY, RIGHT | | 11614886 |
| ASSY, LEFT | | 11614887 |
| PARKING BRAKE CONTROL | INST'N | 11620027 |

ACCESSORIES AND KITS:

| | | |
|---|---|---|
| FRONT CANOPY | INST'N | 11614944 |
| FRONT CANOPY FRAME | INST'N | 11614945 |
| ARCTIC KIT | | 11614988 |
| PERSONNEL HEATER | INST'N | 11614956 |
| WARNING LIGHT KIT | | 11651365 |
| FILTER KIT INFRA RED | | 11624639 |
| FILTER SEPERATOR | INST'N | 11618589 |
| GUN RING MONUNTING KIT | | 11614953 |
| CANOPY AND FRAME KIT REAR | | 11624590 |
| TIRE CHAIN ASSY | | 11632607 |

CRUISING RANGE: ON LAND, 300 MILES

MAX. SPEED: ON LAND, 30.5 MPH
WATER APPROX. 2.6 MPH

*FORDING DEPTH: UNLIMITED

VEHICLE: AMPHIBIOUS INLAND WATERWAYS

GRADE ABILITY: 60%

NOTES:
1. DIMENSIONS ARE IN INCHES AND ARE SHOWN FOR ENGINEERING REFERENCE ONLY.
2. REFERENCED DOCUMENTS SHALL BE OF THE ISSUE IN EFFECT ON DATE OF INVITATIONS FOR BID.
3. THIS VEHICLE SHALL BE IN ACCORDANCE WITH REFERENCED ENGINEERING DRAWINGS, COPIES WHICH MAY BE OBTAINED FROM: US ARMY TANK-AUTOMOTIVE COMMAND, WARREN, MICH. 48090
4. SUBJECT OF NATO STANAG 2805-(EDITION 3). DO NOT REVISE OR CHANGE.

APPROVED 30 SEPT 1969 REVISED © 15 JAN 85

© ENTIRE STANDARD REVISED

| MS PART NO. | ENGINEERING DWG NO |
|---|---|
| MS52112-1 | 11614319 |

P. A. ARMY-AT
Other Cust

INTERNATIONAL INTEREST

TITLE
TRUCK, TANK, FUEL-SERVICING, 2500 GALLON, 4X4, MILITARY DESIGN, M 559

MILITARY STANDARD
MS52112(AT)

PROCUREMENT SPECIFICATION
MIL-T-62248

SUPERSEDES:

SHEET 2 OF 2

DD FORM 1 MAY 73 672-1 LIMITED COORDINATION

PREVIOUS EDITIONS OF THIS FORM ARE OBSOLETE

USER ACTIVITIES:

REVIEWER ACTIVITIES:

This military standard is approved for use by the US Army Tank-Automotive Command, Department of the Army, and is available for use by all Departments and Agencies of the Department of Defense.