Downloaded from http://www.everyspec.com

INCH-POUND

MS51993B
w/AMENDMENT 1
4 February 2014
SUPERSEDING
MS51993B
1 NOVEMBER 2012

DETAIL SPECIFICATION SHEET

INSERT, SCREW THREAD-LOCKED IN, RING LOCKED, SERRATED, HIGH STRENGTH

This specification is approved for use by all Departments and Agencies of the Department of Defense.

The requirements for acquiring the product described herein shall consist of this specification sheet and procurement specification MIL-I-45910.

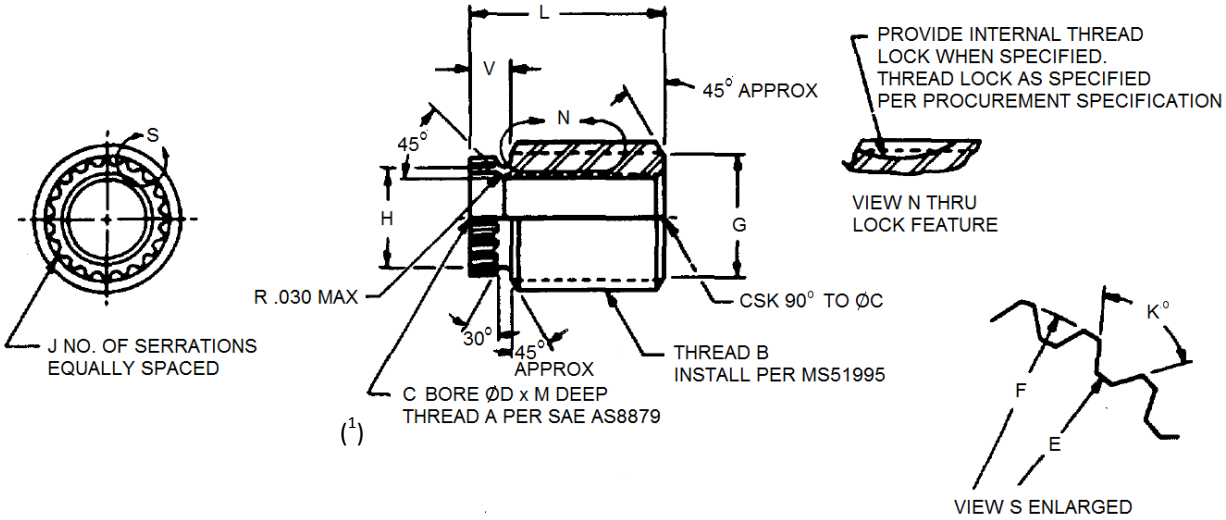

FIGURE 1. Insert, screw thread.

Downloaded from http://www.everyspec.com

TABLE I. Fine Internal and Fine External – Short Length.

DASH NO.	A INTERNAL THREAD UNJF-3B	B EXTERNAL THREAD			C	D	ØE	ØF	ØG	ØH	J	K°	L	M	V	LOCK RING PART NO.
	SIZE	SEE THD NOTE	PITCH DIA	MINOR DIA			+.005 -.004	+.007 -.002	+.000 -.015	MIN		+2° -1°	±.020	±.015	±.015	
-503	.1900-32	.3750-24	.3498 .3479	.3257 .3185	.206 .196	.201	.255	.284	.318	.233	17	86°	.400	.078	.142	MS51997-103
-504	.2500-28	.4375-20	.4073 .4053	.3784 .3700	.267 .257	.261	.316	.345	.370	.294	20	102°	.542	.089	.176	MS51997-104
-505	.3125-24	.5000-20	.4698 .4678	.4409 .4325	.336 .321	.324	.380	.407	.432	.357	24	102°	.678	.099	.200	MS51997-105
-506	.3750-24	.6250-18	.5914 .5894	.5593 .5498	.398 .383	.386	.456	.487	.549	.433	26	102°	.750	.099	.200	MS51997-106
-507	.4375-20	.7500-16	.7122 .7097	.6761 .6656	.462 .447	.449	.567	.601	.665	.535	26	111°	.813	.117	.200	MS51997-107
-508	.5000-20	.8750-14	.8316 .8291	.7904 .7786	.525 .510	.511	.687	.721	.778	.645	30	111°	.948	.117	.255	MS51997-108

TABLE II. Fine Internal and Fine External – Medium Length.

DASH NO.	A INTERNAL THREAD UNJF-3B	B EXTERNAL THREAD			C	D	ØE	ØF	ØG	ØH	J	K°	L	M	V	LOCK RING PART NO.
	SIZE	SEE THD NOTE	PITCH DIA	MINOR DIA			+.005 -.004	+.007 -.002	+.000 -.015	MIN		+2° -1°	±.020	±.015	±.015	
-643	.1900-32	.3750-24	.3498 .3479	.3257 .3185	.206 .196	.201	.255	.284	.318	.233	17	86°	.448	.078	.142	MS51997-103
-644	.2500-28	.4375-20	.4073 .4053	.3784 .3700	.267 .257	.261	.316	.345	.370	.294	20	102°	.616	.089	.176	MS51997-104
-645	.3125-24	.5000-20	.4698 .4678	.4409 .4325	.336 .321	.324	.380	.407	.432	.357	24	102°	.776	.099	.200	MS51997-105
-646	.3750-24	.6250-18	.5914 .5894	.5593 .5498	.398 .383	.386	.456	.487	.549	.433	26	102°	.872	.099	.200	MS51997-106
-647	.4375-20	.7500-16	.7122 .7097	.6761 .6656	.462 .447	.449	.567	.601	.665	.535	26	111°	.948	.117	.200	MS51997-107
-648	.5000-20	.8750-14	.8316 .8291	.7904 .7786	.525 .510	.511	.687	.721	.778	.645	30	111°	1.101	.117	.255	MS51997-108

TABLE III. Fine Internal and Coarse External – Long Length.

DASH NO.	A INTERNAL THREAD UNJF-3B	B EXTERNAL THREAD			C	D	ØE	ØF	ØG	ØH	J	K°	L	M	V	LOCK RING PART NO.
	SIZE	SEE THD NOTE	PITCH DIA	MINOR DIA			+.005 -.004	+.007 -.002	+.000 -.015	MIN		+2° -1°	±.020	±.015	±.015	
-803	.1900-32	.3750-16	.3372 .3347	.3011 .2906	.206 .196	.201	.255	.284	.290	.233	17	86°	.538	.078	.142	MS51997-103
-804	.2500-28	.4375-14	.3941 .3916	.3529 .3411	.267 .257	.261	.316	.345	.341	.294	20	102°	.731	.089	.176	MS51997-104
-805	.3125-24	.5000-13	.4531 .4506	.4087 .3963	.336 .321	.324	.380	.407	.396	.357	24	102°	.932	.099	.200	MS51997-105
-806	.3750-24	.6250-11	.5693 .5668	.5168 .5028	.398 .383	.386	.456	.487	.502	.433	26	102°	1.061	.099	.200	MS51997-106
-807	.4375-20	.7500-10	.6885 .6860	.6308 .6156	.462 .447	.449	.567	.601	.615	.535	26	111°	1.156	.117	.200	MS51997-107
-808	.5000-20	.8750-9	.8065 .8040	.7424 .7257	.525 .510	.511	.687	.721	.725	.645	30	111°	1.333	.117	.255	MS51997-108

Downloaded from http://www.everyspec.com

TABLE IV. Interchangeability

Cancelled (CRES 17-10P)	New (CRES Type A-286)
MS51993	MS51993
P643	S643[1]
P644	S644[1]
P645	S645[1]
P647	S647[1]
P648	S648[1]

NOTES:

1. Material: (See material code letters under mechanical properties)
   Steel, alloy 4140 per SAE AMS6349 or SAE AMS6382.
   Steel, corrosion-resistant, Type A286 (UNS S66286) per SAE AMS5731, SAE AMS5732, SAE AMS5734 or SAE AMS5737.
   Titanium, alloy 6 Al-4V, annealed per SAE AMS6931.

2. Protective coating: Steel, alloy shall be cadmium plated in accordance with SAE AMS-QQ-P-416, Type II, Class 3.
   Steel, corrosion-resistant, material code letter "S", shall be passivated in accordance with SAE AMS2700 when internal non-lock thread is specified by part number.
   Steel, corrosion-resistant, material code letter "S" shall be silver plated in accordance with ASTM B700, Type II, Grade B, .0002 thick when internal locking thread is specified by part number.
   Titanium, alloy, shall have an anodic coating.

3. Surface roughness: Machine surfaces shall be 125 microinches in accordance with ASME B46.1 except serrated collar.

4. Threads: The external thread has a special pitch diameter and minor diameter which installs into a SAE AS8879 class 3B tapped hole. Threads also shall be in accordance with procurement specification.

5. Heat treatment: Inserts shall be heat treated to develop the mechanical properties specified herein.

6. Mechanical Properties. All of the above insert sizes in either short, medium, or long lengths are capable of developing 220,000 psi load rating based on the tensile stress area of the applicable bolt. Resistance to pull out of the insert from the parent material is a function of shear engagement area of the external thread of the insert as defined in the procurement specification. Material code letters with pertinent length dash numbers are listed below:

Material Code Letter	Material
M	Steel, 4140 alloy
S	Steel, Type A286 cres
T	Titanium, 6Al-4V alloy

("T" code only available as non-locking insert)

7. Hardness: Steel, alloy (code M) Rockwell C33 minimum.
   Steel, cres (code S) Brinell 248 minimum.
   Titanium, alloy (code T) Rockwell C39 maximum.

8. Fillets: .030 R max.

9. Edges: Break sharp edges .003 - .015 unless otherwise specified.

10. Dimensions: Dimensions are in inches and are met after plating.

11. Tolerances: Linear dimensions ±.005, angular dimensions ±2°.

12. Part numbers: The MS part number shall consist of the basic MS number, plus the material code, plus the dash number. Add "L" as suffix for internal thread lock."

    Examples: MS51993 M 505 Insert, alloy steel, non-locking.
    MS51993 S 505 Insert, CRES, non-locking.
    MS51993 T 805 Insert, Titanium alloy, non-locking
    * MS51993 M 505 L Insert, alloy steel, internal thread lock
    * The same condition can exist for all of the above materials except "T" code.

13. For design feature purposes, this standard takes precedence over procurement documents referenced herein.

Downloaded from http://www.everyspec.com

14. Referenced documents shall be of the same issue in effect on date of invitation for bid.

15. Amendment Notations. The changes of this specification are marked with a (¹) to indicate modifications generated by this amendment. This was done as a convenience only and the government assumes no liability whatsoever for any inaccuracies in these notations. Bidders and contractors are cautioned to evaluate the requirements of this document based on the entire content irrespective of the marginal notations.

MILITARY INTEREST

Custodians:
Army - AR
Navy - AS
Air Force - 99

Review activities:
Army – AT, AV, MI
Navy – MC, OS, YD
Air Force – 71

Preparing activity:
DLA - IS

(Project 5325-2014-001)

NOTE: The activities listed above were interested in this document as of the date of this document. Since organizations and responsibilities can change, you should verify the currency of the information above using the ASSIST Online database at https://assist.dla.mil.