Downloaded from http://www.everyspec.com

FED. SUP CLASS
2350

USER ACTIVITIES: NAVY-MC

REVIEW ACTIVITIES: ARMY-WC, EL

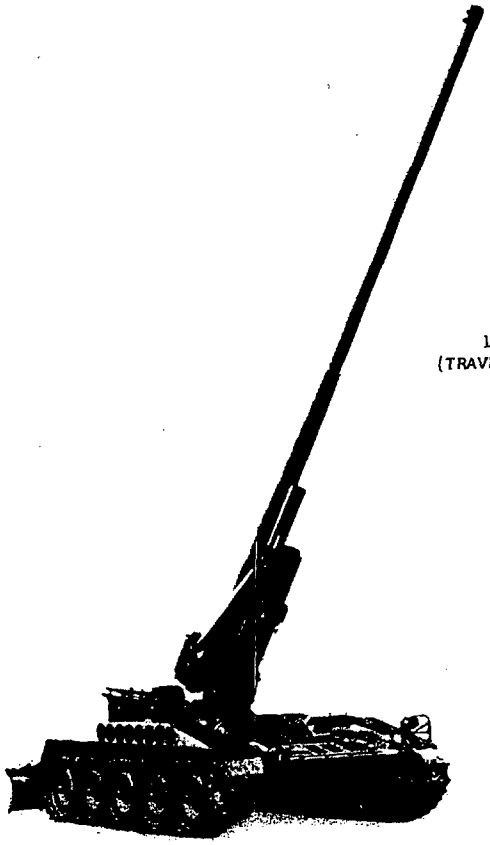

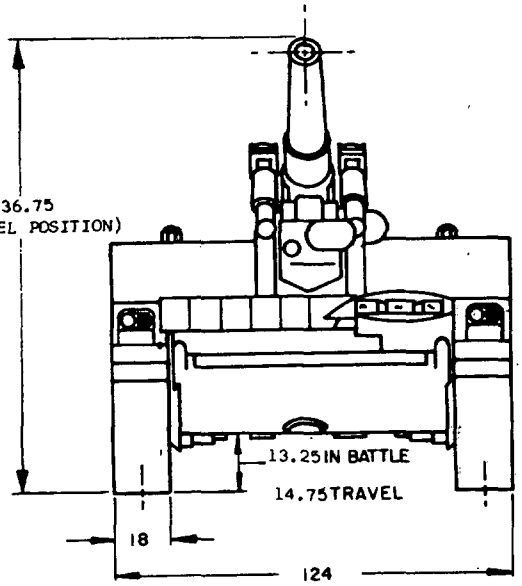

NOTE: ALL DIMENSIONS ARE IN INCHES AND ARE FOR ENGINEERING REFERENCE ONLY.

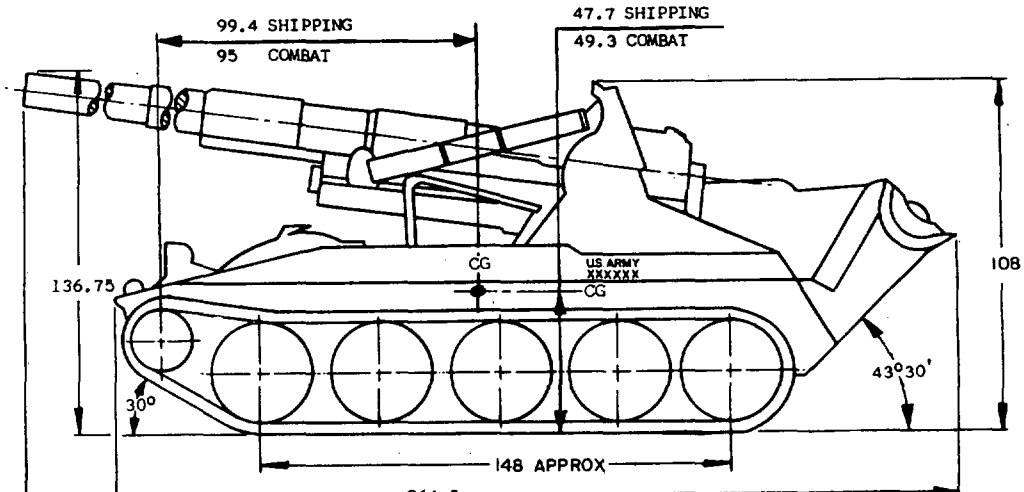

444.75 TRAVEL POSITION-IN BATTERY @ 8°15' ELEVATION (SHOWN)
444.88 SHIPPING POSITION-MINIMUM ELEVATION
505.12 BATTERY POSITION-MINIMUM ELEVATION

(B) ENTIRE STANDARD REVISED

MS PART NO.	DRAWING NO.
MS 51980-1	8736339

APPROVED 4 MARCH 1964 REVISED (A) 26 MARCH 1965 (B) 12 JULY 1977

This military standard is approved by the U. S. Army Tank-Automotive Command, Department of the Army, and shall be used by that activity. All other military activities are required to employ this standard where suitable.

P.A. (AT) Other Cust	International Interest	TITLE GUN, FIELD ARTILLERY, SELF PROPELLED— 175 MM, M107	MILITARY STANDARD MS 51980 (AT)
PROCUREMENT SPECIFICATION MIL-G-45397 (WC)		SUPERSEDES:	SHEET 1 OF 2

DD FORM 1 SEP 57 672-1 (Limited coordination) PREVIOUS EDITIONS OF THIS FORM ARE OBSOLETE. 2350-A273

Downloaded from http://www.everyspec.com

FED. SUP CLASS
2350

VEHICLE CHARACTERISTICS

GENERAL

WEIGHT (COMBAT LOADED) APPROX. 62,100 LBS.
CREW 5
WEIGHT (LESS CREW, STOWAGE AND FUEL) 55,800 LBS.

UNIT GROUND PRESSURE 11.8 LBS/SQ. INCH
TURRET RING 60 IN. PITCH DIA. GEAR,

VISION AND SIGHTING EQUIPMENT

PERISCOPE (VISION) DRIVER'S	TYPE M17	QTY. 3
PERISCOPE COMMANDER'S	TYPE -	QTY. -
SIGHT, PANORAMIC TELESCOPE	TYPE M115	QTY. 1
SIGHT, PANORAMIC MOUNT	TYPE M137	QTY. 1
QUADRANT, FIRE CONTROL ELEVATION	TYPE M15	QTY. 1
OTHER: QUADRANT GUNNER'S	TYPE M1A1	QTY. 1
BINOCULAR	TYPE M17A1	QTY. 1
DIRECT FIRE TELESCOPE	TYPE M116C	QTY. 1
DIRECT FIRE TELESCOPE MOUNT	TYPE M138	QTY. 1

ARMAMENT

PRIMARY GUN, 175MM, M113 (T256E3) IN MOUNT M158
RECOIL MECH. TYPE HYDRO PNEUMATIC
TRAVERSE, RIGHT 30° LEFT 30° RATE 100 MILS/SEC
POWER, TYPE, HYDRAULIC MANUAL TYPE GEAR TRAIN
ELEVATION 65° DEPRESSION +2°
RATE 100 MILS/SEC
EQUILIBRATION SYSTEM PNEUMATIC

SECONDARY ARMAMENT

1. NONE
2. NONE
3. NONE

OTHER: 5 RIFLES, 7.62 MM M14

AMMUNITION

2 RDS. 175 MM GUN
750 RDS. 7.62 MM RIFLE
OTHER: 8 GRENADES, HAND

RUNNING GEAR

SUSPENSION, TYPE, FLAT TRACK, TORSION BAR LOCKOUT
NO. OF WHEELS, 5 DUAL EACH SIDE, WHEEL SIZE 32 IN.
TRACK, TYPE, SINGLE PIN W/REPLACEABLE RUBBER PADS
NO. SHOES/TRACK 75-76, PITCH 6 IN., WIDTH 18 IN.
TIRES, NO. 20 TYPE SOLID RUBBER
SIZE 32 X 4 IN.

ELECTRICAL SYSTEM

NOMINAL VOLTAGE 24 VOLTS
GENERATOR, MAIN, AMPERES 300 PART NO. 10914831
GENERATOR, AUX. NONE
BATTERY, MS 35000-4, QTY. 4, TYPE 6 TN, 12 V, 100 AMP. HRS.

POWER PACKAGE

ENGINE

TYPE, 8 CYL. DIESEL MODEL 8V71T PART NO. 10904740
COMPRESSION IGNITION LIQUID COOLED
DISPLACEMENT 568 CU. IN. BORE 4.25 IN.
STROKE 5.00 IN
GOVERNED SPEED 2300 RPM COMPRESSION RATIO 17:1
FUEL, DIESEL CAPACITY 300 GALLONS
GROSS HORSEPOWER MAX. 405 MIN. 374 @ 2300 RPM
NET HORSEPOWER MAX. 345 MIN.
GROSS TORQUE MAX. 980 LB/FT. MIN. 885 @ 1700 RPM
MAIN COOLING SYSTEM, LIQUID
OIL COOLING SYSTEM, LIQUID, CAP. DRY 37 QTS.
OIL CHANGE W/FILTERS 31 QTS.

POWER TRAIN

TYPE, CROSS DRIVE TRANSVERSE, MODEL NO. XTG-411-2A
HYDRAULIC CONVERTER SINGLE STAGE, STALL MULTIPLICATION 3.3:1
MECH. RATIO - 1ST 4.69:1, 2ND 3.18:1, 3RD 1.59:1
4TH 0.794:1 REV. 1, 5.60:1, REV 2, 3.79:1
TURNING RADIUS, SKID TURN TO INFINITY
STEERING SYSTEM - 1ST, 2ND AND REV 1 - CLUTCH BRAKE
3RD, 4TH AND REV 2 - GEARED STEER (1.475:1 RATIO)
STEERING CONTROL - MECH. STEERING WHEEL
BRAKES: MULTIPLE WET PLATE, OPERATION MECHANICAL FOOT PEDAL
OIL COOLING SYSTEM, HEAT EXCHANGER TRANSMITS HEAT TO ENGINE COOLING MEDIUM

FINAL REDUCTION

TYPE, PLANETARY RATIO 5.35 TO 1 FT./REV. 5.5
SPROCKET PITCH DIA. 21.297 NO. OF TEETH 11

COMMUNICATIONS

RADIO SET NONE
INTERPHONE MODEL; AN/UIC-1 W/C 290U
NO. OF OUTLETS, 3
EXTERNAL INTERPHONE EXTENSION KIT MODEL CE-11W/DR8

FIRE EXTINGUISHER

PART NO. 7714476 FIXED TWO 10 LB. CO_2
PART NO. 7359703 PORTABLE ONE 5 LB. CO_2

PERFORMANCE

GROSS HORSEPOWER TO WEIGHT RATIO 13.8 HP/TON
MAX. TRACTIVE EFFORT 49,200 LBS. TE/W 80 %
MAX. SPEED 34 MPH MAX. GRADE 60%
MAX. TRENCH CROSSING WIDTH 93 IN.
MAX. VERTICAL WALL 40 IN.
CRUISING RANGE 450 MILES APPROX.
MAX. FORDING DEPTH 42 IN.

THIS VEHICLE SHALL BE IN ACCORDANCE WITH REFERENCED DRAWING NO. 8736339 COPY OF WHICH MAY BE OBTAINED FROM U.S. ARMY TANK AUTOMOTIVE MATERIEL READINESS COMMAND, ATTN: DRSTA-GS, WARREN, MI 48090.

CERTAIN PROVISIONS OF THIS STANDARD ARE THE SUBJECT OF QSTAG 150
WHEN REVISION OR CANCELLATION OF THIS STANDARD IS PROPOSED, THE DEPARTMENTAL CUSTODIANS WILL INFORM THEIR RESPECTIVE DEPARTMENTAL STANDARDIZATION OFFICE SO THAT APPROPRIATE ACTION MAY BE TAKEN RESPECTING THE INTERNATIONAL AGREEMENT CONCERNED.

APPROVED 4 MARCH 1964 REVISED (A) 26 MARCH 1965 (B) FOR CHANGES SEE SHEETS 1 AND 2

P.A. / Other Cust	International Interest	TITLE GUN, FIELD ARTILLERY, SELF PROPELLED - 175 MM, M107	MILITARY STANDARD MS 51980 (AT)
PROCUREMENT SPECIFICATION		SUPERSEDES:	SHEET 2 OF 2

DD FORM 1 SEP 57 672-1 (Limited coordination)