Downloaded from http://www.everyspec.com

THE REQUIREMENTS FOR ACQUIRING THE PRODUCT(S) DESCRIBED HEREIN SHALL CONSIST OF THIS SPECIFICATION SHEET AND THE ISSUE OF THE FOLLOWING SPECIFICATION LISTED IN THAT ISSUE OF THE DODISS SPECIFIED IN THE SOLICITATION: MIL-S-45915

THIS SPECIFICATION IS APPROVED FOR USE BY ALL DEPARTMENTS AND AGENCIES OF THE DEPARTMENT OF DEFENSE.

Form Approved
OMB No. 0704-0188

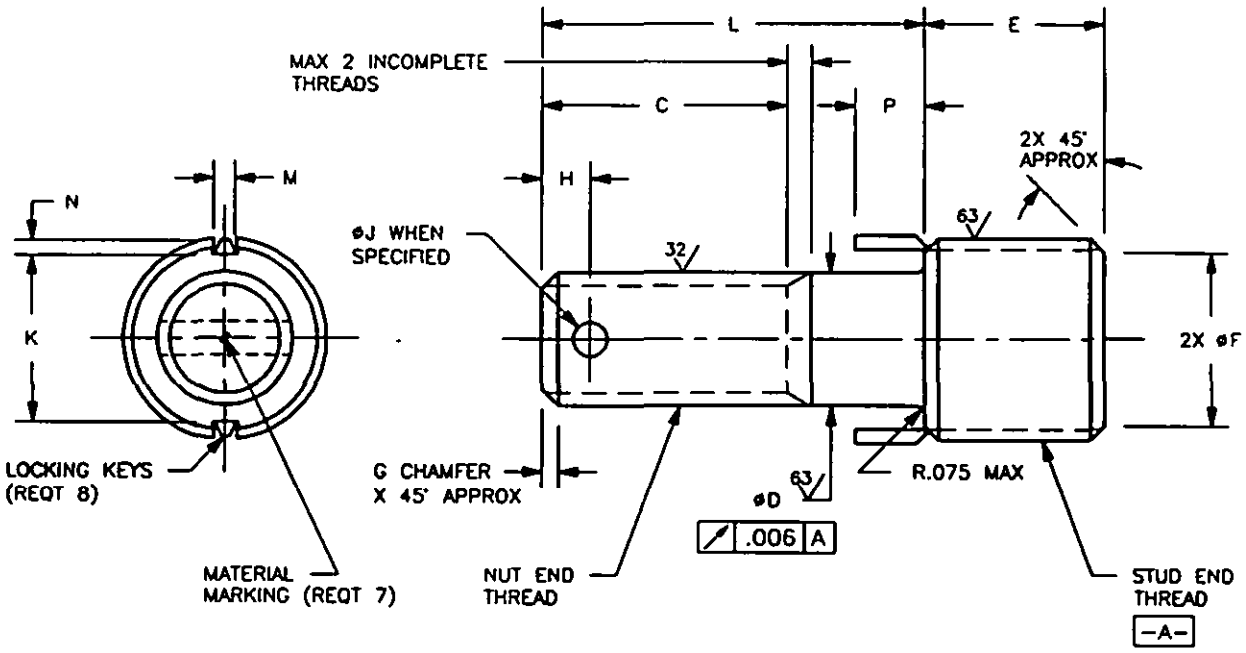

TABLE I. COARSE THREAD, NUT END

DASH NO.	NUT END THREAD MIL-S-8879 UNJC-3A	STUD END THREAD FED-STD-H28/2 EXCEPT MODIFIED MINOR DIA.		C*	ØD GRIP DIA.	E	ØF	G	H	ØJ	K	KEY DIMENSIONS		
		SIZE	ØMINOR	±.030		±.015	REF	REF	±.020	±.010	REF	M REF	N REF	P REF
101	.190-24	.3125-18UNC-2A	.256 .249	.410	.189 .185	.312	.250	.045	.141	.070	.220	.068	.040	.160
102	.250-20	.375-16UNC-2A	.320 .312	.470	.249 .245	.375	.310	.045	.156	.076	.284	.068	.040	.190
103	.3125-18	.4375-14UNC-2A	.383 .375	.530	.312 .308	.437	.375	.045	.172	.076	.345	.068	.040	.190
104	.375-16	.500-13UNC-2A	.440 .432	.640	.374 .370	.500	.430	.045	.172	.106	.407	.068	.040	.190
105	.4375-14	.5625-12UNC-2A	.503 .495	.660	.437 .433	.562	.495	.045	.172	.106	.469	.068	.040	.190
106	.500-13	.625-11UNC-2A	.565 .551	.780	.499 .495	.625	.550	.045	.172	.106	.532	.068	.040	.190

* THIS DIMENSION DOES NOT APPLY TO DASH NUMBERS IN TABLE III ABOVE THE HEAVY LINES.

(E) ENTIRE STANDARD REVISED

INCH-POUND

PREPARING ACTIVITY: ARMY-AR CUSTODIANS: ARMY- AR NAVY- AS AIR FORCE- 99 DLA- REVIEW: AT, AV, MI, SH, 11, 82, IS USER: ME, MC PROJECT NUMBER: 5307-0544	MILITARY SPECIFICATION SHEET TITLE STUD, LOCKED IN, KEY-LOCKED, LIGHTWEIGHT	SPECIFICATION SHEET NUMBER MS51833E 9 MAR 92 SUPERSEDING MS51833D 7 DEC 84 AMSC- N/A FSC- 5307

DISTRIBUTION STATEMENT
A. Approved for public release; distribution is unlimited.

DD Form 672, MAY 88 PREVIOUS EDITIONS ARE OBSOLETE

Downloaded from http://www.everyspec.com

THE REQUIREMENTS FOR ACQUIRING THE PRODUCT(S) DESCRIBED HEREIN SHALL CONSIST OF THIS SPECIFICATION SHEET AND THE ISSUE OF THE FOLLOWING SPECIFICATION LISTED IN THAT ISSUE OF THE DODISS SPECIFIED IN THE SOLICITATION: MIL-S-45915

THIS SPECIFICATION IS APPROVED FOR USE BY ALL DEPARTMENTS AND AGENCIES OF THE DEPARTMENT OF DEFENSE.

Form Approved
OMB No. 0704-0188

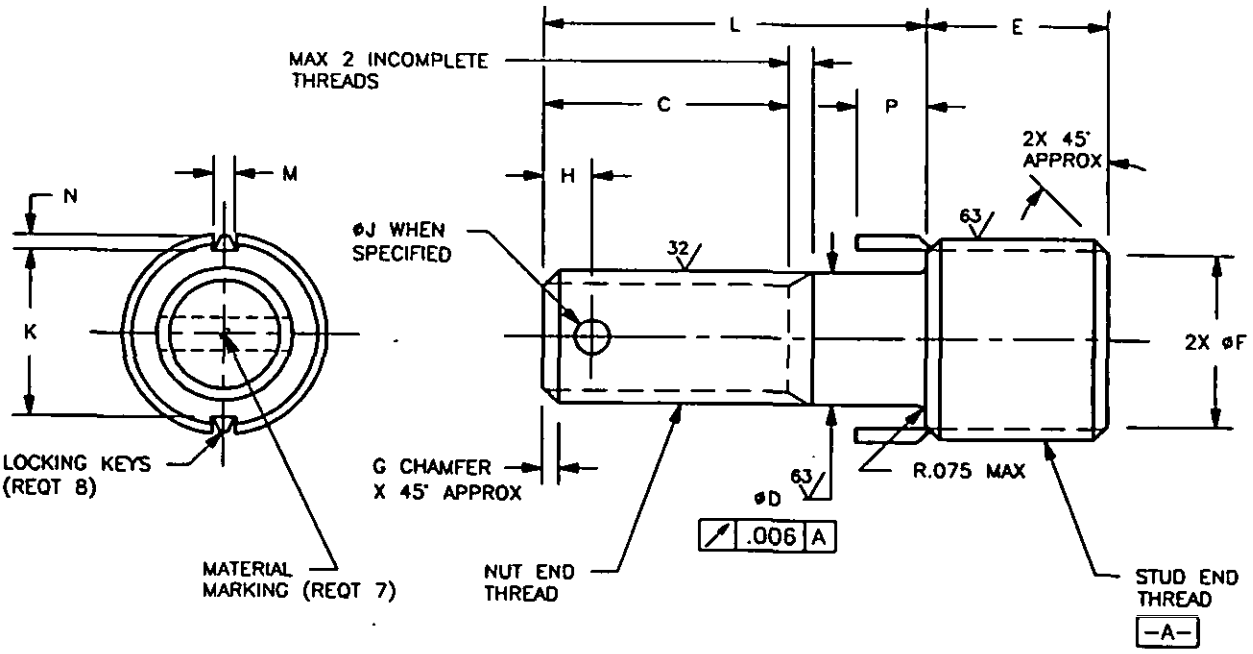

TABLE I. FINE THREAD, NUT END

DASH NO.	NUT END THREAD MIL-S-8879 UNJF-3A	STUD END THREAD FED-STD-H28/2 EXCEPT MODIFIED MINOR DIA.		C*	ØD GRIP DIA.	E	ØF	G	H	ØJ	K	KEY DIMENSIONS		
		SIZE	ØMINOR	±.030		±.015	REF	REF	±.020	±.010	REF	M REF	N REF	P REF
201	.190-32	.3125-18UNC-2A	.256 .249	.410	.189 .185	.312	.250	.045	.141	.070	.220	.068	.040	.160
202	.250-28	.375-16UNC-2A	.320 .312	.470	.249 .245	.375	.310	.045	.156	.076	.284	.068	.040	.190
203	.3125-24	.4375-14UNC-2A	.383 .375	.530	.312 .308	.437	.375	.045	.172	.076	.345	.068	.040	.190
204	.375-24	.500-13UNC-2A	.440 .432	.640	.374 .370	.500	.430	.045	.172	.106	.407	.068	.040	.190
205	.4375-20	.5625-12UNC-2A	.503 .495	.660	.437 .433	.562	.495	.045	.172	.106	.469	.068	.040	.190
206	.500-20	.625-11UNC-2A	.565 .551	.780	.499 .495	.625	.550	.045	.172	.106	.532	.068	.040	.190

* THIS DIMENSION DOES NOT APPLY TO DASH NUMBERS IN TABLE III ABOVE THE HEAVY LINES.

PREPARING ACTIVITY: ARMY-AR CUSTODIANS: ARMY- AR NAVY- AS AIR FORCE- 99 DLA- REVIEW: AT, AV, MI, SH, 11, 82, IS USER: ME, MC PROJECT NUMBER: 5307-0544	MILITARY SPECIFICATION SHEET TITLE STUD, LOCKED IN, KEY-LOCKED, LIGHTWEIGHT	SPECIFICATION SHEET NUMBER MS51833E 9 MAR 92 SUPERSEDING MS51833D 7 DEC 84 AMSC- N/A FSC- 5307

DISTRIBUTION STATEMENT
A. Approved for public release; distribution is unlimited.

Downloaded from http://www.everyspec.com

THE REQUIREMENTS FOR ACQUIRING THE PRODUCT(S) DESCRIBED HEREIN SHALL CONSIST OF THIS SPECIFICATION SHEET AND THE ISSUE OF THE FOLLOWING SPECIFICATION LISTED IN THAT ISSUE OF THE DODISS SPECIFIED IN THE SOLICITATION: MIL-S-45915

THIS SPECIFICATION IS APPROVED FOR USE BY ALL DEPARTMENTS AND AGENCIES OF THE DEPARTMENT OF DEFENSE.

Form Approved
OMB No. 0704-0188

TABLE III. TABULATED LENGTHS

L NUT END ±.030	LENGTH DASH NUMBER — NOMINAL DIAMETER .190	.250	.3125	.375	.4375	.500
.375	6	6				
.438	7	7				
.500	8	8				
.562	9	9	9			
.625	10	10	10	10	10	
.688	11	11	11	11	11	
.750	12	12	12	12	12	12
.812	13	13	13	13	13	13
.875	14	14	14	14	14	14
.938	15	15	15	15	15	15
1.000	16	16	16	16	16	16
1.062	17	17	17	17	17	17
1.125	18	18	18	18	18	18
1.188	19	19	19	19	19	19
1.250	20	20	20	20	20	20
1.312	21	21	21	21	21	21
1.375	22	22	22	22	22	22
1.438	23	23	23	23	23	23
1.500	24	24	24	24	24	24
1.562	25	25	25	25	25	25
1.625	26	26	26	26	26	26
1.688	27	27	27	27	27	27
1.750	28	28	28	28	28	28
1.812	29	29	29	29	29	29
1.875	30	30	30	30	30	30
1.938	31	31	31	31	31	31
2.000	32	32	32	32	32	32
2.125	34	34	34	34	34	34
2.250	36	36	36	36	36	36
2.375	38	38	38	38	38	38
2.500	40	40	40	40	40	40
2.625		42	42	42	42	42
2.750		44	44	44	44	44
2.875		46	46	46	46	46
3.000		48	48	48	48	48
3.125		50	50	50		50
3.250		52	52	52		52
3.375		54	54	54		54
3.500		56	56	56		56
3.625		58	58	58		58
3.750		60	60	60		60
3.875		62	62	62		62
4.000		64	64	64		64

DASH NUMBERED PARTS ABOVE THE HEAVY LINE ARE THREADED TO THE STUD END AS SPECIFIED HEREIN. THE MAXIMUM DISTANCE FROM THE STUD END TO THE FIRST FULL THREAD SHALL BE EQUAL TO THE SUM OF THE MAXIMUM FILLET RADIUS AND A MAXIMUM OF TWO INCOMPLETE THREADS. INCOMPLETE THREADS NOT TO ENTER FILLET AREA.

PREPARING ACTIVITY: ARMY-AR CUSTODIANS: ARMY- AR NAVY- AS AIR FORCE- 99 DLA- REVIEW: AT, AV, MI, SH, 11, 82, IS USER: ME, MC PROJECT NUMBER: 5307-0544	MILITARY SPECIFICATION SHEET TITLE STUD, LOCKED IN, KEY-LOCKED, LIGHTWEIGHT	SPECIFICATION SHEET NUMBER MS51833E 9 MAR 92 SUPERSEDING MS51833D 7 DEC 84 AMSC- N/A FSC- 5307

DISTRIBUTION STATEMENT
A. Approved for public release; distribution is unlimited.

DD Form 672, MAY 88 PREVIOUS EDITIONS ARE OBSOLETE

Downloaded from http://www.everyspec.com

THE REQUIREMENTS FOR ACQUIRING THE PRODUCT(S) DESCRIBED HEREIN SHALL CONSIST OF THIS SPECIFICATION SHEET AND THE ISSUE OF THE FOLLOWING SPECIFICATION LISTED IN THAT ISSUE OF THE DODISS SPECIFIED IN THE SOLICITATION: MIL-S-45915

THIS SPECIFICATION IS APPROVED FOR USE BY ALL DEPARTMENTS AND AGENCIES OF THE DEPARTMENT OF DEFENSE.

Form Approved
OMB No. 0704-0188

REQUIREMENTS:

1. MATERIAL: STEEL, CORROSION-RESISTANT, TYPE 303 (UNS S30300) IN ACCORDANCE WITH AMS 5640 (TYPE 1) OR ASTM A 582, OR 303SE (UNS S30323) IN ACCORDANCE WITH AMS 5640 (TYPE 2), AMS 5738 OR ASTM A 582.
   STEEL, CORROSION-RESISTANT, TYPE A286 (UNS S66286) IN ACCORDANCE WITH AMS 5731, AMS 5734 OR AMS 5737.
   STEEL, ALLOY, GRADE 4140 (UNS G41400) IN ACCORDANCE WITH MIL-S-5626 OR GRADE 8740 (UNS G87400) IN ACCORDANCE WITH AMS 6322.
   LOCKING KEYS: STEEL, CORROSION-RESISTANT, TYPE 302 CHEMICAL COMPOSITION OF ASTM A 580 ONLY.

2. CADMIUM PLATING AND SURFACE TREATMENT: CORROSION-RESISTANT STEEL SHALL BE PASSIVATED IN ACCORDANCE WITH QQ-P-35.
   ALLOY STEEL SHALL BE CADMIUM PLATED IN ACCORDANCE WITH QQ-P-416, TYPE II, CLASS 3. THE LOCKING KEYS MAY OR MAY NOT BE CADMIUM PLATED.

3. SURFACE TEXTURE: MACHINED SURFACES SHALL BE IN ACCORDANCE WITH ANSI/ASME B46.1.

4. HEAT TREATMENT: ALLOY STEEL STUDS SHALL BE HEAT TREATED TO 160,000 psi Ftu MINIMUM IN ACCORDANCE WITH MIL-H-6875.
   CORROSION-RESISTANT STEEL STUDS, TYPE A286 (AMS 5731, AMS 5734), SHALL BE HEAT TREATED TO 140,000 psi Ftu MINIMUM.

5. HARDNESS: ALLOY STEEL STUDS SHALL HAVE A HARDNESS RANGE OF 36-40 HRC.
   CORROSION-RESISTANT STEEL STUDS, TYPE A286, SHALL HAVE A HARDNESS RANGE OF 29-38 HRC.

6. PART NUMBER: THE PART NUMBER SHALL CONSIST OF THE BASIC MS SHEET NUMBER PLUS THE DASH NUMBER TAKEN FROM TABLE I OR TABLE II, AS APPLICABLE:

   EXAMPLE: MS51833 - 103 - 24

   - 24 — DASH NUMBER FROM TABLE III.
   - 103 — ADD "D" IN LIEU OF DASH IF DRILLED HOLE IS REQUIRED.
   - 103 — DASH NUMBER FROM TABLE I OR TABLE II.
   - - — MATERIAL: DASH INDICATES ALLOY STEEL, GRADE 4140 OR 8740.
     ADD "A" IN LIEU OF DASH FOR CRES, TYPE A286.
     ADD "C" IN LIEU OF DASH FOR CRES, TYPE 303 OR 303SE.
   - MS51833 — BASIC MS SHEET NUMBER.

   EXAMPLE: MS51833A103024 INDICATES - STUD, LOCKED IN, KEY-LOCKED, LIGHTWEIGHT, CRES A286, .3125-18 NUT END THREAD, .4375-14 STUD END THREAD, 1.500 LENGTH OF NUT END WITH DRILLED HOLE.

7. MATERIAL MARKING: CRES 303 OR 303SE HAS NO IDENTIFYING MARK.
   CRES A286 SHALL BE IDENTIFIED ON TOP OF NUT END BY ONE (1) LINE OR DASH MARK.
   ALLOY STEEL 4140 OR 8740 SHALL BE IDENTIFIED ON TOP OF NUT END BY TWO (2) PARALLEL LINES OR DASH MARKS.

8. STUDS WITH NUT END THREAD SIZE .250 AND SMALLER SHALL BE SUPPLIED WITH TWO (2) LOCKING KEYS SPACED 180° APART.
   STUDS WITH NUT END THREAD SIZE .3125 AND GREATER SHALL BE SUPPLIED WITH FOUR (4) LOCKING KEYS SPACED 90° APART.

9. STUDS SHALL BE FREE OF ALL HANGING BURRS AND SLIVERS WHICH MIGHT BECOME DISLODGED UNDER USAGE.

10. SOURCE IDENTIFICATION MARK: SOURCE IDENTIFICATION MARK SHALL BE IN ACCORDANCE WITH MIL-S-45915.

11. ALL DIMENSIONS ARE AFTER CADMIUM PLATING OR SURFACE TREATMENT.

12. FILLETS ARE R.015 MAXIMUM.

NOTES:

1. ALL DIMENSIONS ARE IN INCHES.

2. INSTALLATION OF STUDS SHALL BE IN ACCORDANCE WITH MS51835.

3. IN THE EVENT OF A CONFLICT BETWEEN THE TEXT OF THIS STANDARD AND THE REFERENCES CITED HEREIN, THE TEXT OF THIS STANDARD SHALL TAKE PRECEDENCE.

4. REFERENCED GOVERNMENT (OR NON-GOVERNMENT) DOCUMENTS OF THE ISSUE LISTED IN THAT ISSUE OF THE DEPARTMENT OF DEFENSE INDEX OF SPECIFICATIONS AND STANDARDS (DODISS) SPECIFIED IN THE SOLICITATION FORM A PART OF THIS STANDARD TO THE EXTENT SPECIFIED HEREIN.

PREPARING ACTIVITY: ARMY-AR CUSTODIANS: ARMY- AR NAVY- AS AIR FORCE- 99 DLA- REVIEW: AT, AV, MI, SH, 11, 82, IS USER: ME, MC PROJECT NUMBER: 5307-0544	MILITARY SPECIFICATION SHEET TITLE STUD, LOCKED IN, KEY-LOCKED, LIGHTWEIGHT	SPECIFICATION SHEET NUMBER MS51833E 9 MAR 92 SUPERSEDING MS51833D 7 DEC 84 AMSC- N/A FSC- 5307

DISTRIBUTION STATEMENT
A. Approved for public release; distribution is unlimited.