INCH-POUND

MS51512B
14 December 2015
SUPERSEDING
MS51512A
17 January 1979

DETAIL SPECIFICATION SHEET

TEE, PIPE TO TUBE, MALE PIPE ON BRANCH, 37 DEGREE FLARED

This specification is approved for use by all Departments and Agencies of the Department of Defense.

Inactive for new design after DATE. For new design, use SAE-J514.

The requirements for acquiring the product described herein shall consist of this specification sheet and MIL-DTL-18866.

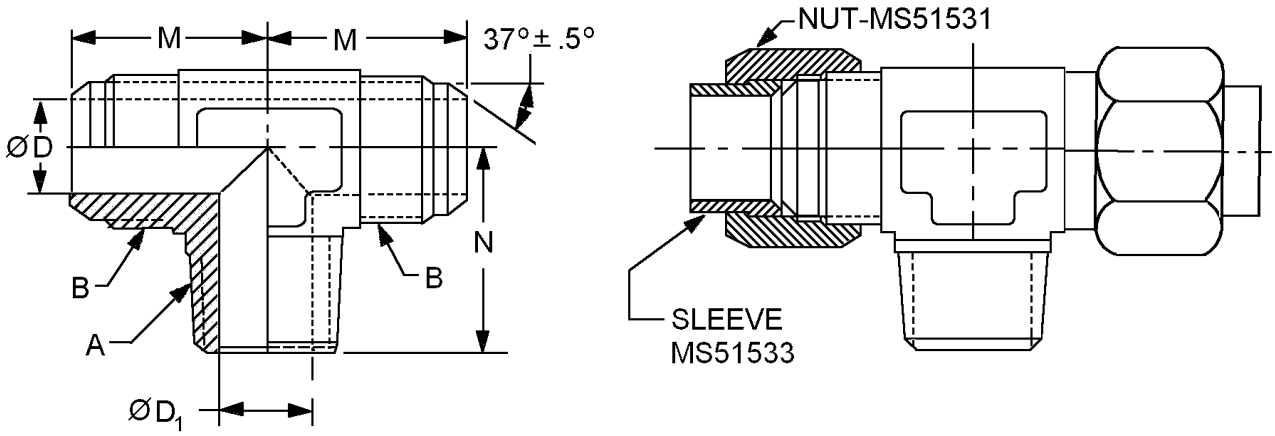

FIGURE 1. Tee, male pipe on branch.

Suffix designator		Tube OD nom.	B Straight thread	D diameter	
Assembly (see note 4)	Body			Basic inches (mm)	Tolerance inches (mm)
A2	B2	.1250 (3.175)	.3125-24 UNF-2A	.062 (1.57)	±.003 (0.08)
A3	B3	.1875 (4.763)	.3750-24 UNF-2A	.125 (3.18)	
A4	B4	.2500 (6.350)	.4375-20 UNF-2A	.172 (4.37)	
A5	B5	.3125 (7.936)	.5000-20 UNF-2A	.234 (5.94)	
A6	B6	.3750 (9.525)	.5625-18 UNF-2A	.297 (7.54)	±.004 (0.10)
A8	B8	.5000 (12.700)	.7500-16 UNF-2A	.391 (9.93)	
A10	B10	.6250 (15.875)	.8750-14 UNF-2A	.484 (12.29)	
A12	B12	.7500 (19.050)	1.0625-12 UN-2A	.609 (15.47)	±.005 (0.13)
A14	B14	.8750 (22.225)	1.1875-12 UN-2A	.718 (18.24)	
A16	B16	1.0000 (25.400)	1.3125-12 UN-2A	.844 (21.44)	±.007 (0.18)
A20	B20	1.2500 (31.750)	1.6250-12 UN-2A	1.078 (27.38)	+.008 -.005 (+0.20 -0.13)
A24	B24	1.5000 (38.100)	1.8750-12 UN-2A	1.312 (33.32)	
A32	B32	2.0000 (50.800)	2.500-12 UN-2A	1.781 (45.24)	+.010 -.005 (+0.25 -.013)

Suffix designator		D_1 Dia drill inches (mm)	M inches (mm) ±.030 (0.76)	N inches (mm) ±.030 (0.76)
Assembly	Body			
A2	B2	.188 (4.78)	.770 (19.56)	.720 (18.29)
A3	B3	.388 (9.86)	.830 (21.08)	.720 (18.29)
A4	B4	.168 (4.27)	.890 (22.61)	.780 (19.81)
A5	B5	.188 (4.78)	.930 (23.62)	.780 (19.81)
A6	B6	.281 (7.14)	1.060 (26.92)	1.090 (27.69)
A8	B8	.406 (10.31)	1.250 (31.75)	1.220 (30.99)
A10	B10	.531 (13.49)	1.450 (36.83)	1.470 (37.34)
A12	B12	.719 (18.26)	1.660 (42.16)	1.590 (40.39)
A14	B14	.719 (18.26)	1.730 (43.94)	1.690 (42.93)
A16	B16	.938 (23.83)	1.810 (45.97)	1.970 (50.04)
A20	B20	1.250 (31.75)	2.060 (52.32)	2.380 (60.45)
A24	B24	1.500 (38.10)	2.330 (59.18)	2.640 (67.06)
A32	B32	1.938 (49.23)	3.060 (77.72)	3.000 (76.20)

NOTES:
1. Dimensions are in inches.
2. Metric equivalents are given for information only.
3. Break all sharp edges and remove all burrs and slivers.
4. Assemblies are only furnished to this specification (body, nuts, and sleeves). Bodies are not to be stocked stored or issued.
5. Dimensions and tolerances not shown shall be in accordance with SAE-J514 for 37° flared fittings.
6. The drawing is for identification purposes only and is not intended to restrict designs and shapes not dimensioned.

FIGURE 1. Tee, male pipe on branch. - Continued.

REQUIREMENTS:

Fittings shall be as specified on figure 1 and tables I and II.

Components of the assemblies shall be of the same material and finish.

Materials shall be in accordance with MIL-DTL-18866 and table I.

TABLE I. Materials.

Material	Form	Specification	Alloy
Carbon steel	Bar	SAE-J403	1110, 1120, 1140, 1213, 1215, or 12L14
	Forgings		
Chrome-molybdenum steel	Bars	SAE-AMS6370	4130
	Forgings	SAE-AMS6382	
		SAE-AMS6370	
Corrosion resistant steel	Bars and forgings	ASTM A276/A276M	304, 304L, 316, or 321
		ASTM A564/A564M	XM-12 (15-5 PH) UNS S15500 or 603 (17-4 PH) UNS S17400
		SAE-AMS5639	UNS S30400
		SAE-AMS5645	UNS S32100
		SAE-AMS5647	UNS S30403
		SAE-AMS5743	UNS S35500
	Bar	ASTM A582/A582M	UNS S30300
Nickel-copper alloy	Bar	ASTM B164 QQ-N-281	UNS N04400
High-chromium nickel alloy	Bar	ASTM B166	UNS N06690
	Forgings	ASTM B564	
Titanium 1/	Bars	SAE-AMS4928	6AI-4V annealed
	Forgings		

1/ Titanium shall not be used in oxygen or potable water systems.

Finish. Finishes shall be as specified in table II. All platings shall be capable of meeting a minimum of 96 hours salt spray test in accordance with ASTM B117. The fittings shall show no evidence of corrosion after 96 hours of salt spray. Fluid passages, other openings and internal threads shall not be subject to the plating thickness requirement and may have bare areas provided they are protected with a light film of oil.

TABLE II. Material and finish identification codes.

PIN code material/plating finish	Material	Plating finish
Blank	Steel	Cadmium plating in accordance with SAE-AMS-C-81562, type II, class 3 or SAE-AMS-QQ-P-416, type II, class 2. 1/
CN		Cadmium plating in accordance with SAE-AMS-C-81562, type II, class 3 or SAE-AMS-QQ-P-416, type II, class 2 with NAVAIR trivalent chromium pretreatment (TCP) in accordance with MIL-DTL-81706, type II, class 1A. 1/
E		NAVAIR TCP in accordance with MIL-DTL-81706, type II, class 1A.
F	Steel	Zinc plate (finish J, P, or R) with NAVAIR TCP in accordance with MIL-DTL-81706, type II, class 1A.
H	Steel	Zinc/Aluminum in accordance with ASTM F1136/F1136M, grade 3, NC.
J	Steel	Zinc-nickel in accordance with SAE-AMS2417, type 2, grade B.
M	Nickel-copper alloy UNS N04400	No additional finish.
N	High-chromium nickel alloy UNS N06690	No additional finish.
P	Steel	Zinc phosphate finish in accordance MIL-DTL-16232 type Z, class1.
R	Steel	Zinc plating in accordance with ASTM B633; type VI, Fe/Zn 5. 2/
S	Corrosion resistant steel	No additional finish. Passivation in accordance with SAE-AMS2700, method1, type 6 or 7.
T	Titanium	Anodize in accordance with SAE-AMS2488 type 2.
TF	Titanium	Fluoride phosphate in accordance with SAE-AMS2486. 3/
Z	Steel	Zinc plating in accordance with ASTM B633; type II or III, Fe/Zn 5, or ASTM B695, type II, class 5. 4/
ZN	Steel	Zinc plating in accordance with ASTM B633; type II or III, Fe/Zn 5, or ASTM B695, type II, class 5 with NAVAIR TCP in accordance with MIL-DTL-81706, type II, class 1A. 4/

1/ Embrittlement test need not be run. Cadmium shall not be used in oxygen or potable water systems.
2/ Hexavalent chromium free.
3/ A pretreatment, a modification of the fluoride treatment, or a post treatment shall be applied so the final color of the fittings shall be similar to FED-STD-595 colors 36076 through 36293.
4/ Not for use in aircraft.

Trivalent wrenchability. When the finish has been damaged due to poor wrenchability, the surface of the connector shall be touched up using the brush plating process below. The term “trivalent wrenchability” is used to evaluate the ability of the finish to withstand abrasion from an excessive amount of wrenching.

a. Brush plating of hard chromium by electrodeposition shall be in accordance with SAE-AMS-2451/5.
b. Brush plating of medium-hardness, low stress nickel by electrodeposition shall be in accordance with SAE-AMS-2451/9.
c. Brush plating of NAVAIR TCP shall be in accordance with MIL-DTL-81706, type II, class 1A, material form 1 through 6, application method B. Example of a PIN: M817062A6B.

Maximum operating pressure. Maximum operating pressure shall be in accordance with SAE-J514.

PIN: The PIN consists of the letters “MS”, the specification number, a letter and number for tee size, and a letter for material finish designator.

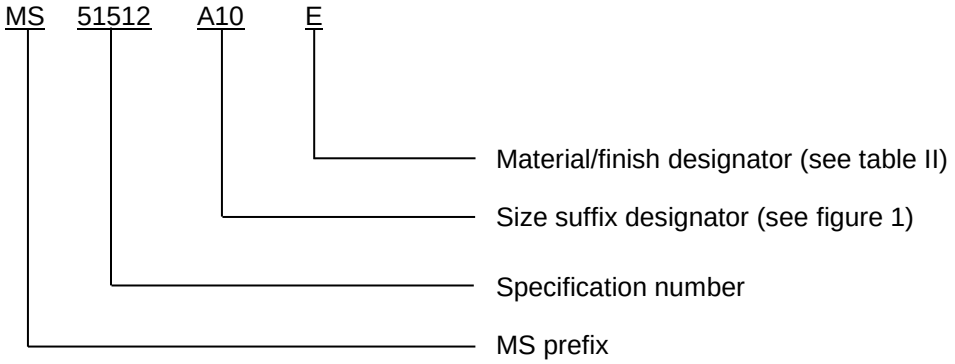

PIN example: MS51512A10E indicates a tee, pipe to tube, .6250 inch (15.875 mm), steel with NAVAIR TCP.

Cadmium is not recommended. To the users of this document, it is recommended that the use of carbon steel material with cadmium plating be used only when other materials and finishes specified in this document cannot meet performance requirements.

Order of precedence. Unless otherwise noted herein or in the contract, in the event of a conflict between the text of this document and the references cited herein, the text of this document takes precedence. Nothing in this document, however, supersedes applicable laws and regulations unless a specific exemption has been obtained.

Referenced documents shall be of the issue in effect on date of invitations for bid.

Table III provides a detailed cross-reference of inactive MS51512 PIN’s and for new design SAE-J514 PIN’s.

MS51512 parts have straight threads in accordance with ASME B1.1 the SAE parts have straight threads in accordance with SAE-J425.

Users are cautioned to evaluate replacement parts for their particular application.

CAUTION: The superseding information is valid as of the date of this specification and may be superseded by subsequent revisions of the superseding document.

TABLE III. MS51512 to SAE-J514 cross reference.

Inactive for new design MS51512- PIN		TUBE O.D.	Pipe thread NPTF	For new design SAE-J514 PIN	
Assembly	Body			Assembly	Body
MS51512A2	MS51512B2	1/8	1/8	Not available	Not available
MS51512A2CN	MS51512B2CN	1/8	1/8	Not available	Not available
MS51512A2E	MS51512B2E	1/8	1/8	Not available	Not available
MS51512A2F	MS51512B2F	1/8	1/8	Not available	Not available
MS51512A2H	MS51512B2H	1/8	1/8	Not available	Not available
MS51512A2J	MS51512B2J	1/8	1/8	Not available	Not available
MS51512A2M	MS51512B2M	1/8	1/8	J514-2-2-070425MA	J514-2-2-070425MB
MS51512A2N	MS51512B2N	1/8	1/8	J514-2-2-070425NA	J514-2-2-070425NB
MS51512A2P	MS51512B2P	1/8	1/8	J514-2-2-070425PA	J514-2-2-070425PB
MS51512A2R	MS51512B2R	1/8	1/8	Not available	Not available
MS51512A2S	MS51512B2S	1/8	1/8	J514-2-2-070425SA	J514-2-2-070425SB
MS51512A2T	MS51512B2T	1/8	1/8	J514-2-2-070425TA	J514-2-2-070425TB
MS51512A2TF	MS51512B2TF	1/8	1/8	Not available	Not available
MS51512A2Z	MS51512B2Z	1/8	1/8	J514-2-2-070425ZA	J514-2-2-070425ZB
MS51512A2ZN	MS51512B2ZN	1/8	1/8	Not available	Not available
MS51512A3	MS51512B3	3/16	1/8	Not available	Not available
MS51512A3CN	MS51512B3CN	3/16	1/8	Not available	Not available
MS51512A3E	MS51512B3E	3/16	1/8	Not available	Not available
MS51512A3F	MS51512B3F	3/16	1/8	Not available	Not available
MS51512A3H	MS51512B3H	3/16	1/8	Not available	Not available
MS51512A3J	MS51512B3J	3/16	1/8	Not available	Not available
MS51512A3M	MS51512B3M	3/16	1/8	J514-3-2-070425MA	J514-3-2-070425MB
MS51512A3N	MS51512B3N	3/16	1/8	J514-3-2-070425NA	J514-3-2-070425NB
MS51512A3P	MS51512B3P	3/16	1/8	J514-3-2-070425PA	J514-3-2-070425PB
MS51512A3R	MS51512B3R	3/16	1/8	Not available	Not available
MS51512A3S	MS51512B3S	3/16	1/8	J514-3-2-070425SA	J514-3-2-070425SB
MS51512A3T	MS51512B3T	3/16	1/8	J514-3-2-070425TA	J514-3-2-070425TB
MS51512A3TF	MS51512B3TF	3/16	1/8	Not available	Not available
MS51512A3Z	MS51512B3Z	3/16	1/8	J514-3-2-070425ZA	J514-3-2-070425ZB
MS51512A3ZN	MS51512B3ZN	3/16	1/8	Not available	Not available
MS51512A4	MS51512B4	1/4	1/8	Not available	Not available
MS51512A4CN	MS51512B4CN	1/4	1/8	Not available	Not available
MS51512A4E	MS51512B4E	1/4	1/8	Not available	Not available
MS51512A4F	MS51512B4F	1/4	1/8	Not available	Not available
MS51512A4H	MS51512B4H	1/4	1/8	Not available	Not available
MS51512A4J	MS51512B4J	1/4	1/8	Not available	Not available
MS51512A4M	MS51512B4M	1/4	1/8	J514-4-2-070425MA	J514-4-2-070425MB
MS51512A4N	MS51512B4N	1/4	1/8	J514-4-2-070425NA	J514-4-2-070425NB
MS51512A4P	MS51512B4P	1/4	1/8	J514-4-2-070425PA	J514-4-2-070425PB
MS51512A4R	MS51512B4R	1/4	1/8	Not available	Not available
MS51512A4S	MS51512B4S	1/4	1/8	J514-4-2-070425SA	J514-4-2-070425SB
MS51512A4T	MS51512B4T	1/4	1/8	J514-4-2-070425TA	J514-4-2-070425TB
MS51512A4TF	MS51512B4TF	1/4	1/8	Not available	Not available
MS51512A4Z	MS51512B4Z	1/4	1/8	J514-4-2-070425ZA	J514-4-2-070425ZB
MS51512A4ZN	MS51512B4ZN	1/4	1/8	Not available	Not available

TABLE III. MS51512 to SAE-J514 cross reference - Continued.

Inactive for new design MS51512- PIN		TUBE O.D.	Pipe thread NPTF	For new design SAE-J514 PIN	
Assembly	Body			Assembly	Body
MS51512A5	MS51512B5	5/16	1/8	Not available	Not available
MS51512A5CN	MS51512B5CN	5/16	1/8	Not available	Not available
MS51512A5E	MS51512B5E	5/16	1/8	Not available	Not available
MS51512A5F	MS51512B5F	5/16	1/8	Not available	Not available
MS51512A5H	MS51512B5H	5/16	1/8	Not available	Not available
MS51512A5J	MS51512B5J	5/16	1/8	Not available	Not available
MS51512A5M	MS51512B5M	5/16	1/8	J514-5-2-070425MA	J514-5-2-070425MB
MS51512A5N	MS51512B5N	5/16	1/8	J514-5-2-070425NA	J514-5-2-070425NB
MS51512A5P	MS51512B5P	5/16	1/8	J514-5-2-070425PA	J514-5-2-070425PB
MS51512A5R	MS51512B5R	5/16	1/8	Not available	Not available
MS51512A5S	MS51512B5S	5/16	1/8	J514-5-2-070425SA	J514-5-2-070425SB
MS51512A5T	MS51512B5T	5/16	1/8	J514-5-2-070425TA	J514-5-2-070425TB
MS51512A5TF	MS51512B5TF	5/16	1/8	Not available	Not available
MS51512A5Z	MS51512B5Z	5/16	1/8	J514-5-2-070425ZA	J514-5-2-070425ZB
MS51512A5ZN	MS51512B5ZN	5/16	1/8	Not available	Not available
MS51512A6	MS51512B6	3/8	1/4	Not available	Not available
MS51512A6CN	MS51512B6CN	3/8	1/4	Not available	Not available
MS51512A6E	MS51512B6E	3/8	1/4	Not available	Not available
MS51512A6F	MS51512B6F	3/8	1/4	Not available	Not available
MS51512A6H	MS51512B6H	3/8	1/4	Not available	Not available
MS51512A6J	MS51512B6J	3/8	1/4	Not available	Not available
MS51512A6M	MS51512B6M	3/8	1/4	J514-6-4-070425MA	J514-6-4-070425MB
MS51512A6N	MS51512B6N	3/8	1/4	J514-6-4-070425NA	J514-6-4-070425NB
MS51512A6P	MS51512B6P	3/8	1/4	J514-6-4-070425PA	J514-6-4-070425PB
MS51512A6R	MS51512B6R	3/8	1/4	Not available	Not available
MS51512A6S	MS51512B6S	3/8	1/4	J514-6-4-070425SA	J514-6-4-070425SB
MS51512A6T	MS51512B6T	3/8	1/4	J514-6-4-070425TA	J514-6-4-070425TB
MS51512A6TF	MS51512B6TF	3/8	1/4	Not available	Not available
MS51512A6Z	MS51512B6Z	3/8	1/4	J514-6-4-070425ZA	J514-6-4-070425ZB
MS51512A6ZN	MS51512B6ZN	3/8	1/4	Not available	Not available
MS51512A8	MS51512B8	1/2	3/8	Not available	Not available
MS51512A8CN	MS51512B8CN	1/2	3/8	Not available	Not available
MS51512A8E	MS51512B8E	1/2	3/8	Not available	Not available
MS51512A8F	MS51512B8F	1/2	3/8	Not available	Not available
MS51512A8H	MS51512B8H	1/2	3/8	Not available	Not available
MS51512A8J	MS51512B8J	1/2	3/8	Not available	Not available
MS51512A8M	MS51512B8M	1/2	3/8	J514-8-6-070425MA	J514-8-6-070425MB
MS51512A8N	MS51512B8N	1/2	3/8	J514-8-6-070425NA	J514-8-6-070425NB
MS51512A8P	MS51512B8P	1/2	3/8	J514-8-6-070425PA	J514-8-6-070425PB
MS51512A8R	MS51512B8R	1/2	3/8	Not available	Not available
MS51512A8S	MS51512B8S	1/2	3/8	J514-8-6-070425SA	J514-8-6-070425SB
MS51512A8T	MS51512B8T	1/2	3/8	J514-8-6-070425TA	J514-8-6-070425TB
MS51512A8TF	MS51512B8TF	1/2	3/8	Not available	Not available
MS51512A8Z	MS51512B8Z	1/2	3/8	J514-8-6-070425ZA	J514-8-6-070425ZB
MS51512A8ZN	MS51512B8ZN	1/2	3/8	Not available	Not available

TABLE III. MS51512 to SAE-J514 cross reference - Continued.

Inactive for new design MS51512- PIN		TUBE O.D.	Pipe thread NPTF	For new design SAE-J514 PIN	
Assembly	Body			Assembly	Body
MS51512A10	MS51512B10	5/8	1/2	Not available	Not available
MS51512A10CN	MS51512B10CN	5/8	1/2	Not available	Not available
MS51512A10E	MS51512B10E	5/8	1/2	Not available	Not available
MS51512A10F	MS51512B10F	5/8	1/2	Not available	Not available
MS51512A10H	MS51512B10H	5/8	1/2	Not available	Not available
MS51512A10J	MS51512B10J	5/8	1/2	Not available	Not available
MS51512A10M	MS51512B10M	5/8	1/2	J514-10-8-070425MA	J514-10-8-070425MB
MS51512A10N	MS51512B10N	5/8	1/2	J514-10-8-070425NA	J514-10-8-070425NB
MS51512A10P	MS51512B10P	5/8	1/2	J514-10-8-070425PA	J514-10-8-070425PB
MS51512A10R	MS51512B10R	5/8	1/2	Not available	Not available
MS51512A10S	MS51512B10S	5/8	1/2	J514-10-8-070425SA	J514-10-8-070425SB
MS51512A10T	MS51512B10T	5/8	1/2	J514-10-8-070425TA	J514-10-8-070425TB
MS51512A10TF	MS51512B10TF	5/8	1/2	Not available	Not available
MS51512A10Z	MS51512B10Z	5/8	1/2	J514-10-8-070425ZA	J514-10-8-070425ZB
MS51512A10ZN	MS51512B10ZN	5/8	1/2	Not available	Not available
MS51512A12	MS51512B12	3/4	3/4	Not available	Not available
MS51512A12CN	MS51512B12CN	3/4	3/4	Not available	Not available
MS51512A12E	MS51512B12E	3/4	3/4	Not available	Not available
MS51512A12F	MS51512B12F	3/4	3/4	Not available	Not available
MS51512A12H	MS51512B12H	3/4	3/4	Not available	Not available
MS51512A12J	MS51512B12J	3/4	3/4	Not available	Not available
MS51512A12M	MS51512B12M	3/4	3/4	J514-12-12-070425MA	J514-12-12-070425MB
MS51512A12N	MS51512B12N	3/4	3/4	J514-12-12-070425NA	J514-12-12-070425NB
MS51512A12P	MS51512B12P	3/4	3/4	J514-12-12-070425PA	J514-12-12-070425PB
MS51512A12R	MS51512B12R	3/4	3/4	Not available	Not available
MS51512A12S	MS51512B12S	3/4	3/4	J514-12-12-070425SA	J514-12-12-070425SB
MS51512A12T	MS51512B12T	3/4	3/4	J514-12-12-070425TA	J514-12-12-070425TB
MS51512A12TF	MS51512B12TF	3/4	3/4	Not available	Not available
MS51512A12Z	MS51512B12Z	3/4	3/4	J514-12-12-070425ZA	J514-12-12-070425ZB
MS51512A12ZN	MS51512B12ZN	3/4	3/4	Not available	Not available
MS51512A14	MS51512B14	7/8	3/4	Not available	Not available
MS51512A14CN	MS51512B14CN	7/8	3/4	Not available	Not available
MS51512A14E	MS51512B14E	7/8	3/4	Not available	Not available
MS51512A14F	MS51512B14F	7/8	3/4	Not available	Not available
MS51512A14H	MS51512B14H	7/8	3/4	Not available	Not available
MS51512A14J	MS51512B14J	7/8	3/4	Not available	Not available
MS51512A14M	MS51512B14M	7/8	3/4	J514-14-12-070425MA	J514-14-12-070425MB
MS51512A14N	MS51512B14N	7/8	3/4	J514-14-12-070425NA	J514-14-12-070425NB
MS51512A1P	MS51512B14P	7/8	3/4	J514-14-12-070425PA	J514-14-12-070425PB
MS51512A14R	MS51512B14R	7/8	3/4	Not available	Not available
MS51512A1S	MS51512B14S	7/8	3/4	J514-14-12-070425SA	J514-14-12-070425SB
MS51512A14T	MS51512B14T	7/8	3/4	J514-14-12-070425TA	J514-14-12-070425TB
MS51512A14TF	MS51512B14TF	7/8	3/4	Not available	Not available
MS51512A14Z	MS51512B14Z	7/8	3/4	J514-14-12-070425ZA	J514-14-12-070425ZB
MS51512A14ZN	MS51512B14ZN	7/8	3/4	Not available	Not available

TABLE III. MS51512 to SAE-J514 cross reference - Continued.

Inactive for new design MS51512- PIN		TUBE O.D.	Pipe thread NPTF	For new design SAE-J514 PIN	
Assembly	Body			Assembly	Body
MS51512A16	MS51512B16	1	1	Not available	Not available
MS51512A16CN	MS51512B16CN	1	1	Not available	Not available
MS51512A16E	MS51512B16E	1	1	Not available	Not available
MS51512A16F	MS51512B16F	1	1	Not available	Not available
MS51512A16H	MS51512B16H	1	1	Not available	Not available
MS51512A16J	MS51512B16J	1	1	Not available	Not available
MS51512A16M	MS51512B16M	1	1	J514-16-16-070425MA	J514-16-16-070425MB
MS51512A16N	MS51512B16N	1	1	J514-16-16-070425NA	J514-16-16-070425NB
MS51512A16P	MS51512B16P	1	1	J514-16-16-070425PA	J514-16-16-070425PB
MS51512A16R	MS51512B16R	1	1	Not available	Not available
MS51512A16S	MS51512B16S	1	1	J514-16-16-070425SA	J514-16-16-070425SB
MS51512A16T	MS51512B16T	1	1	J514-16-16-070425TA	J514-16-16-070425TB
MS51512A16TF	MS51512B16TF	1	1	Not available	Not available
MS51512A16Z	MS51512B16Z	1	1	J514-16-16-070425ZA	J514-16-16-070425ZB
MS51512A16ZN	MS51512B16ZN	1	1	Not available	Not available
MS51512A20	MS51512B20	1 1/4	1 1/4	Not available	Not available
MS51512A20CN	MS51512B20CN	1 1/4	1 1/4	Not available	Not available
MS51512A20E	MS51512B20E	1 1/4	1 1/4	Not available	Not available
MS51512A20F	MS51512B20F	1 1/4	1 1/4	Not available	Not available
MS51512A20H	MS51512B20H	1 1/4	1 1/4	Not available	Not available
MS51512A20J	MS51512B20J	1 1/4	1 1/4	Not available	Not available
MS51512A20M	MS51512B20M	1 1/4	1 1/4	J514-20-20-070425MA	J514-20-20-070425MB
MS51512A20N	MS51512B20N	1 1/4	1 1/4	J514-20-20-070425NA	J514-20-20-070425NB
MS51512A20P	MS51512B20P	1 1/4	1 1/4	J514-20-20-070425PA	J514-20-20-070425PB
MS51512A20R	MS51512B20R	1 1/4	1 1/4	Not available	Not available
MS51512A20S	MS51512B20S	1 1/4	1 1/4	J514-20-20-070425SA	J514-20-20-070425SB
MS51512A20T	MS51512B20T	1 1/4	1 1/4	J514-20-20-070425TA	J514-20-20-070425TB
MS51512A20TF	MS51512B20TF	1 1/4	1 1/4	Not available	Not available
MS51512A20Z	MS51512B20Z	1 1/4	1 1/4	J514-20-20-070425ZA	J514-20-20-070425ZB
MS51512A20ZN	MS51512B20ZN	1 1/4	1 1/4	Not available	Not available
MS51512A24	MS51512B24	1 1/2	1 1/2	Not available	Not available
MS51512A24CN	MS51512B24CN	1 1/2	1 1/2	Not available	Not available
MS51512A24E	MS51512B24E	1 1/2	1 1/2	Not available	Not available
MS51512A24F	MS51512B24F	1 1/2	1 1/2	Not available	Not available
MS51512A24H	MS51512B24H	1 1/2	1 1/2	Not available	Not available
MS51512A24J	MS51512B24J	1 1/2	1 1/2	Not available	Not available
MS51512A24M	MS51512B24M	1 1/2	1 1/2	J514-24-24-070425MA	J514-24-24-070425MB
MS51512A24N	MS51512B24N	1 1/2	1 1/2	J514-24-24-070425NA	J514-24-24-070425NB
MS51512A24P	MS51512B24P	1 1/2	1 1/2	J514-24-24-070425PA	J514-24-24-070425PB
MS51512A24R	MS51512B24R	1 1/2	1 1/2	Not available	Not available
MS51512A24S	MS51512B24S	1 1/2	1 1/2	J514-24-24-070425SA	J514-24-24-070425SB
MS51512A24T	MS51512B24T	1 1/2	1 1/2	J514-24-24-070425TA	J514-24-24-070425TB
MS51512A24TF	MS51512B24TF	1 1/2	1 1/2	Not available	Not available
MS51512A24Z	MS51512B24Z	1 1/2	1 1/2	J514-24-24-070425ZA	J514-24-24-070425ZB
MS51512A24ZN	MS51512B24ZN	1 1/2	1 1/2	Not available	Not available

TABLE III. MS51512 to SAE-J514 cross reference - Continued.

Inactive for new design MS51512- PIN		TUBE O.D.	Pipe thread NPTF	For new design SAE-J514 PIN	
Assembly	Body			Assembly	Body
MS51512A32	MS51512B32	2	2	Not available	Not available
MS51512A32CN	MS51512B32CN	2	2	Not available	Not available
MS51512A32E	MS51512B32E	2	2	Not available	Not available
MS51512A32F	MS51512B32F	2	2	Not available	Not available
MS51512A32H	MS51512B32H	2	2	Not available	Not available
MS51512A32J	MS51512B32J	2	2	Not available	Not available
MS51512A32M	MS51512B32M	2	2	J514-32-32-070425MA	J514-32-32-070425MB
MS51512A32N	MS51512B32N	2	2	J514-32-32-070425NA	J514-32-32-070425NB
MS51512A32P	MS51512B32P	2	2	J514-32-32-070425PA	J514-32-32-070425PB
MS51512A32R	MS51512B32R	2	2	Not available	Not available
MS51512A32S	MS51512B32S	2	2	J514-32-32-070425SA	J514-32-32-070425SB
MS51512A32T	MS51512B32T	2	2	J514-32-32-070425TA	J514-32-32-070425TB
MS51512A32TF	MS51512B32TF	2	2	Not available	Not available
MS51512A32Z	MS51512B32Z	2	2	J514-32-32-070425ZA	J514-32-32-070425ZB
MS51512A32ZN	MS51512B32ZN	2	2	Not available	Not available

Changes from previous issue. Marginal notations are not used in this revision to identify changes with respect to the previous issue, due to the extent of the changes.

Referenced documents. In addition to MIL-DTL-18866, this document references the following:

FED-STD-595/36076
FED-STD-595/36081
FED-STD-595/36099
FED-STD-595/36118
FED-STD-595/36134
FED-STD-595/36152
FED-STD-595/36170
FED-STD-595/36173
FED-STD-595/36176
FED-STD-595/36231
FED-STD-595/36251
FED-STD-595/36270
FED-STD-595/36280
FED-STD-595/36293
MIL-DTL-16232
MIL-DTL-81706
MS51531
MS51533
QQ-N-281
ASME B1.1
ASTM A276/A276M
ASTM A564/A564M
ASTM A582/A582M
ASTM B117
ASTM B164
ASTM B166
ASTM B564
ASTM B633
ASTM B695
ASTM F1136/F1136M
SAE-AMS-C-81562
SAE-AMS-QQ-P-416
SAE-AMS2417
SAE-AMS2451/5
SAE-AMS2451/9
SAE-AMS2486
SAE-AMS2488
SAE-AMS2700
SAE-AMS4928
SAE-AMS5639
SAE-AMS5645
SAE-AMS5647
SAE-AMS5743
SAE-AMS6370
SAE-AMS6382
SAE-J403
SAE-J425
SAE-J514

CONCLUDING MATERIAL

Custodians:
Army - AR
Navy - OS
Air Force - 99
DLA - CC

Review activities:
Army - AT
Navy - MC
Air Force - 71

Preparing activity:
DLA - CC

(Project 4730-2016-008)

NOTE: The activities listed above were interested in this document as of the date of this document. Since organizations and responsibilities can change, you should verify the currency of the information above using the ASSIST Online database at https://assist.dla.mil.