Downloaded from http://www.everyspec.com

FED SUP CLASS
2920

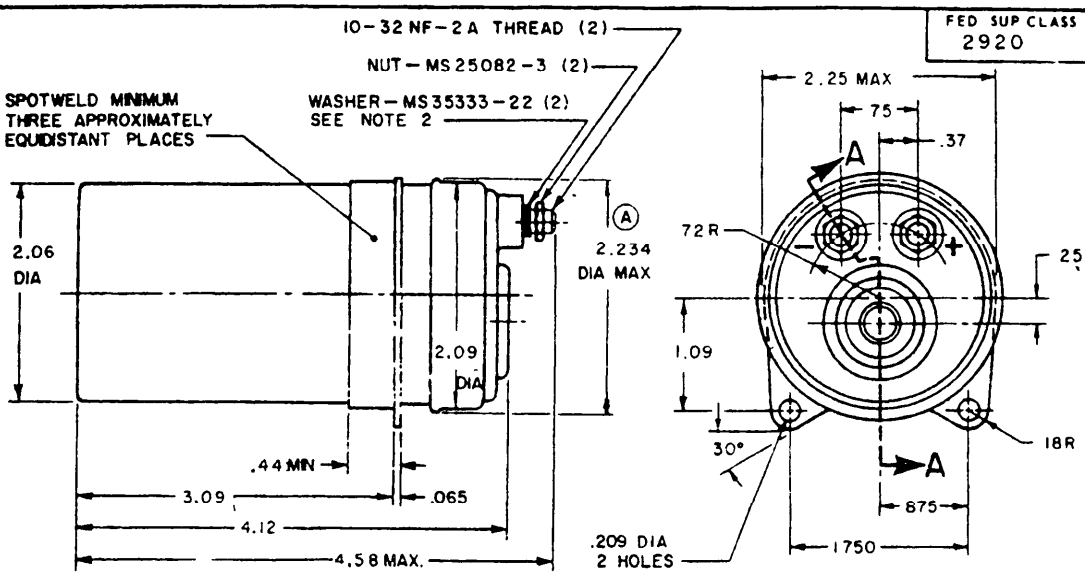

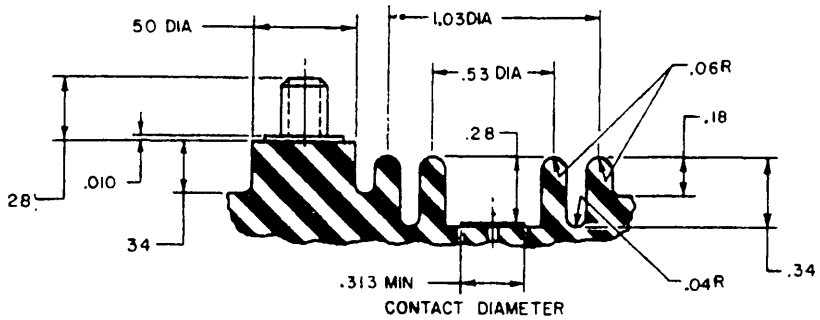

ENLARGED SECTION A-A

NOTES:

(C) 1. THIS EPOXY POTTED COIL CONTAINS AN INTERNAL BALLAST RESISTANCE IN SERIES WITH THE PRIMARY WINDING AND IS DESIGNED FOR USE IN DISTRIBUTORS CONFORMING TO REFERENCED SPECIFICATION.

2. MANUFACTURER'S DESIGN WILL BE ACCEPTABLE IN PLACE OF WASHER-MS35333-22, IF INTERCHANGEABILITY AND FUNCTION ARE NOT AFFECTED.

3. DIMENSIONS ARE IN INCHES. UNLESS OTHERWISE SPECIFIED, TOLERANCES ARE: ± .01 ON 2 PLACE DECIMALS, ± 2° ON ANGLES, AND ± .005 ON 3 PLACE DECIMALS.

4. THREADS SHALL BE IN ACCORDANCE WITH SCREW THREAD STANDARDS FOR FEDERAL SERVICES, HANDBOOK H28.

5. FOR DESIGN FEATURE PURPOSES THIS STANDARD TAKES PRECEDENCE OVER PROCUREMENT DOCUMENTS REFERENCED HEREIN.

6. REFERENCED DOCUMENTS SHALL BE OF THE ISSUE IN EFFECT ON DATE OF INVITATION FOR BID.

7. MARKING - TERMINAL POLARITY SHALL BE CLEARLY AND PERMANENTLY IDENTIFIED ADJACENT TO THE TERMINAL. THE MS PART NO. - MANUFACTURERS IDENTIFICATION - VOLTAGE RATING - SHALL BE APPLIED TO THE PART IN ACCORDANCE WITH PROVISIONS OF MIL-STD-130.

8. THIS STANDARD IS NOT INTENDED TO LIMIT CONSTRUCTION OTHER THAN AS SHOWN HEREON BY DIMENSIONS, NOTATIONS AND REFERENCED DOCUMENTS.

MS PART NO	FORMER PART NO
MS 51114-1	116E3966

P A ARMY-AT Other Cust	TITLE COIL, IGNITION-24 VOLT, DC (WITH INTERNAL BALLAST)	MILITARY STANDARD MS51114
PROCUREMENT SPECIFICATION MIL-D-13791	SUPERSEDES	SHEET 1 OF 1

DD FORM 1 SEP 57 672-1 (COORDINATED)

PREVIOUS EDITIONS OF THIS FORM ARE OBSOLETE

USER ACTIVITIES: ARMY-EL, ME; NAVY-MC, YD

APPROVED 16 SEPTEMBER 1958 REVISED (A) 19 MAY 1961 (B) 22 JUNE 1967 (C) 6 JUNE 1973

This military standard is mandatory for use by all Departments and Agencies of the Department of Defense. Selection for all new engineering and design applications and for repetitive use shall be made from this document.