Downloaded from http://www.everyspec.com

INCH-POUND

MS39323C
20 January 2017
SUPERSEDING
MS39323B
25 June 2015

DETAIL SPECIFICATION SHEET

FITTING, TUBE, REDUCER: 37 DEGREE FLARE

Reactivated after 20 January 2017 and may be used for new and existing designs and acquisitions.

This specification is approved for use by all Departments and Agencies of the Department of Defense.

The requirements for acquiring the product described herein shall consist of this specification sheet and MIL-DTL-18866.

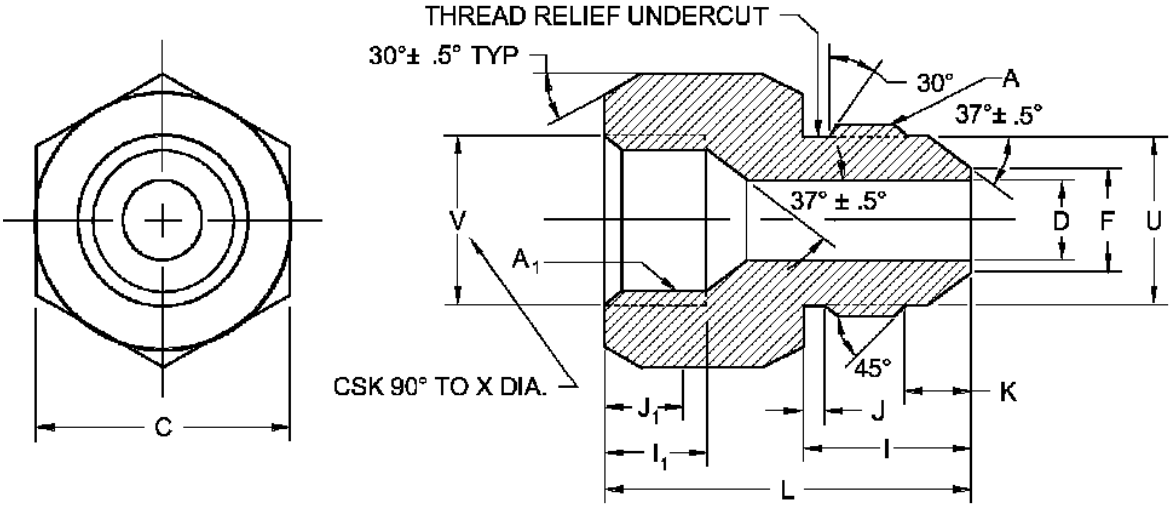

Dash number	Tube O.D nom	A straight thread	Minor dia.		A_1 Straight thread	C Hex Nom	D dia. Drill	
		Nom size class A	Inches +.005 -.000	mm +0.13 -0.00	Nom size class B		Inches ±.003	mm ±0.08
-5-4	5/16 - 1/4	.5000-20 UNF-2A	.451	11.46	7/16 - 20	5/8	.172	4.40
-6-5	3/8 - 5/16	.5625-18 UNF-2A	.508	12.90	1/2 - 20	11/16	.234	5.94
-10-8	5/8 - 1/2	.8750-14 UNF-2A	.804	20.42	3/4 - 16	1	.391	9.93
-12-10	3/4 - 5/8	1.0625-12 UN-2A	.979	24.86	7/8 - 14	1 1/4	.484	12.29

See notes at end of figure.

FIGURE 1. Reducing adapter, hex nut, one-piece.

Downloaded from http://www.everyspec.com

Dash number	F dia.		I		I_1		J		J_1 Full thread	
	Inches ±.003	mm ±0.08	inches ±.015	inches ±.013	inches ±.005	mm ±0.13	inches ±.013	mm ±0.40	inches	mm
-5-4	.193	4.90	.550	.075	.344	8.74	.075	1.90	.261	6.63
-6-5	.255	6.48	.550	.075	.344	8.74	.075	1.90	.261	6.63
-10-8	.426	10.82	.657	.094	.469	11.91	.094	2.40	.354	8.99
-12-10	.539	13.70	.758	.107	.500	12.70	.107	2.72	.370	9.40

Dash number	K		L		U dia.		V dia.	
	inches +.015 -.000	mm +0.40 -.000	inches ±.010	mm ±0.25	inches +.000 -.005	mm +0.00 -0.13	inches +.015 -.000	mm +0.40 -0.00
-5-4	.193	4.90	1.156	29.30	.359	9.12	.505	12.80
-6-5	.193	4.90	1.188	30.20	.421	10.69	.567	14.40
-10-8	.253	6.43	1.437	36.50	.654	16.61	.880	22.35
-12-10	.266	6.80	1.656	42.00	.767	19.48	1.067	27.10

NOTES:
1. Dimensions are in inches.
2. Metric equivalents are given for information only.
3. Break all sharp edges and remove all burrs and slivers.
4. SAE-J514 does not have a configuration or dash sizes covering these sizes.

FIGURE 1. Reducing adapter, hex, one-piece - Continued.

Downloaded from http://www.everyspec.com

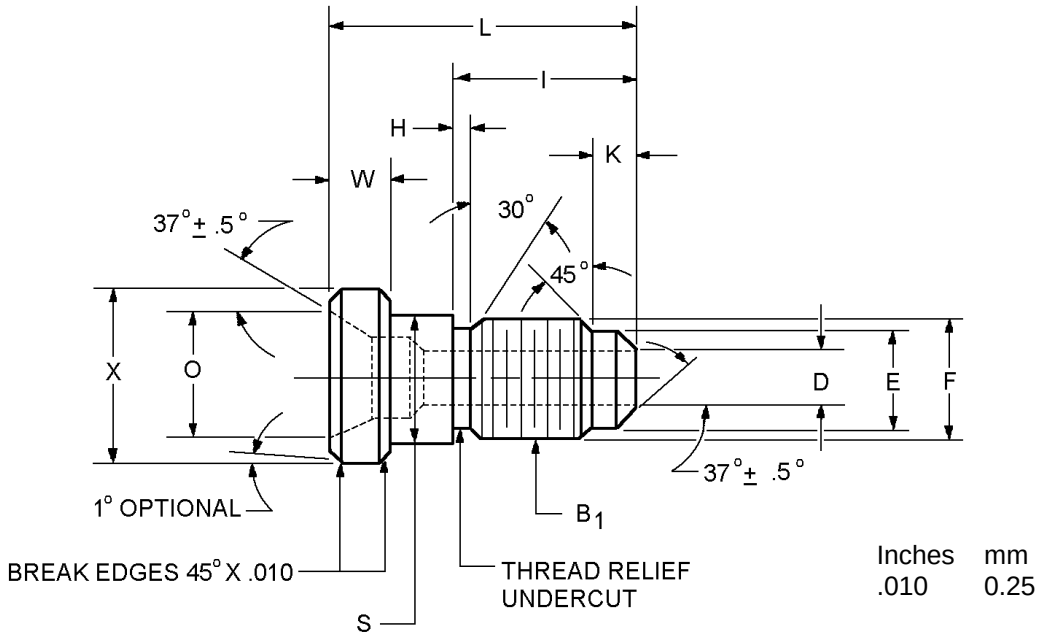

Dash number	Tube O.D nom	B_1 straight thread	Pitch dia. inches		Pitch dia. mm		D dia.		E dia.	
		Nom size class 2A	Max	Min	Max	Min	inches ±.030	mm ±0.76	inches ±.003	mm ±0.08
-6-4	3/8 - 1/4	7/16 - 20	.4037	.3999	10.254	10.157	.172	4.37	.193	4.90
-8-4	1/2 - 1/4	7/16 - 20	.4037	.3999	10.254	10.157	.172	4.37	.193	4.90
-10-4	5/8 - 1/4	7/16 - 20	.4037	.3999	10.254	10.157	.172	4.37	.193	4.90
-12-4	3/4 - 1/4	7/16 - 20	.4037	.3999	10.254	10.157	.172	4.37	.193	4.90
-8-5	5/8 - 1/2	1/2 - 20	.4662	.4619	11.841	11.732	.234	5.94	.225	6.48
-10-5	5/8 - 5/16	1/2 - 20	.4662	.4619	11.841	11.732	.234	5.94	.225	6.48
-12-5	3/4 - 5/16	1/2 - 20	.4662	.4619	11.841	11.732	.234	5.94	.225	6.48
-8-6	1/2 - 3/8	9/16 - 18	.5250	.5205	13.335	13.221	.297	7.54	.318	8.08
-10-6	5/8 - 3/8	9/16 - 18	.5250	.5205	13.335	13.221	.297	7.54	.318	8.08
-12-6	3/4 - 3/8	9/16 - 18	.5250	.5205	13.335	13.221	.297	7.54	.318	8.08
-12-8	3/4 - 1/2	3/4 - 16	.7079	.7029	17.980	17.853	.391	9.93	.426	10.82

See notes at end of figure.

FIGURE 2. Reducing adapter without large nut.

Downloaded from http://www.everyspec.com

Dash number	F dia.		H		I		K		L	
	inches +.000 -.005	mm +0.00 -0.13	inches +.015 -.000	mm 0.38 -0.00	inches +.015 -.000	mm 0.38 -0.00	inches +.015 -.000	mm +0.38	inches ±.02	mm ±0.50
-6-4	.359	9.12	.075	1.90	.550	13.97	.193	4.90	.97	24.64
-8-4	.359	9.12	.075	1.90	.550	13.97	.193	4.90	1.00	25.40
-10-4	.359	9.12	.075	1.90	.550	13.97	.193	4.90	1.03	26.16
-12-4	.359	9.12	.075	1.90	.550	13.97	.193	4.90	1.09	27.67
-8-5	.421	10.69	.075	1.90	.550	13.97	.193	4.90	1.00	25.40
-10-5	.421	10.69	.075	1.90	.550	13.97	.193	4.90	1.03	26.16
-12-5	.421	10.69	.075	1.90	.550	13.97	.193	4.90	1.09	27.67
-8-6	.476	12.09	.083	2.10	.556	14.12	.198	5.02	1.00	25.40
-10-6	.476	12.09	.083	2.10	.556	14.12	.198	5.02	1.03	26.16
-12-6	.476	12.09	.083	2.10	.556	14.12	.198	5.02	1.09	27.67
-12-8	.654	16.61	.094	2.40	.657	16.69	.253	6.40	1.19	30.23

Dash number	O dia.		S		W		X dia.	
	inches +.005 -.015	mm +0.13 -0.38	inches +.000 -.003	mm +0.00 -0.08	inches ±.02	mm ±0.5	inches +.000 -.003	mm 0.00 -0.08
-6-4	.441	11.20	.432	10.97	.17	4.3	.502	12.75
-8-4	.589	14.96	.562	14.27	.22	5.6	.682	17.32
-10-4	.705	17.91	.690	17.53	.23	5.8	.797	20.24
-12-4	.880	22.35	.826	20.98	.27	6.9	.972	24.69
-8-5	.589	14.96	.562	14.27	.22	5.6	.682	17.32
-10-5	.705	17.91	.690	17.53	.23	5.8	.797	20.24
-12-5	.880	22.35	.826	20.98	.27	6.9	.972	24.69
-8-6	.589	14.96	.562	14.27	.22	5.6	.682	17.32
-10-6	.705	17.91	.690	17.53	.23	5.8	.797	20.24
-12-6	.880	22.35	.826	20.98	.27	6.9	.972	24.69
-12-8	.880	22.35	.826	20.98	.27	6.9	.972	24.69

NOTES:
1. Dimensions are in inches.
2. Metric equivalents are given for information only.
3. Break all sharp edges and remove all burrs and slivers.

FIGURE 2. Reducing adapter without large nut - Continued.

REQUIREMENTS:

Fittings shall be as specified on figure 1 or 2 and in table I.

Materials shall be in accordance with MIL-DTL-18866.

Finish. Finishes shall be in accordance with table I. All plating's shall be capable of meeting 96-hour salt spray test in accordance with ASTM B117. The fittings shall show no evidence of red corrosion after 96 hours of salt spray. Fluid passages, other openings, and internal threads shall not be subject to the plating thickness requirement and may have bare areas provided they are protected with a light film of oil.

Downloaded from http://www.everyspec.com

TABLE I. Material and finish identification codes.

PIN code material/plating finish	Material	Plating finish
Blank	Steel	Cadmium plating in accordance with SAE-AMS-C-81562, type II, class 3 or SAE-AMS-QQ-P-416, type II, class 2. 1/
H	Steel	Zinc-Aluminum in accordance with ASTM F1136/F1136M, grade 3, NC.
J	Steel	Zinc-nickel in accordance with SAE-AMS2417, type 2, grade B. 2/
M	Nickel-copper alloy UNS N04400	No additional finish.
N	High-chromium nickel alloy UNS N06690	No additional finish.
P	Steel	Zinc phosphate finish in accordance MIL-DTL-16232 type Z, class 1. 3/ 4/
R	Steel	Zinc plating in accordance with ASTM B633; type III or V, Fe/Zn 8. 4/
S	Corrosion resistant steel	No additional finish. Passivation in accordance with SAE-AMS2700, method 1, type 6 or 7.
T	Titanium	Anodize in accordance with SAE-AMS2488 type 2. 5/
TF	Titanium	Fluoride phosphate in accordance with SAE-AMS2486. 5/
Z	Steel	Zinc plating in accordance with ASTM B695, type II, class 8. 4/
ZC	Steel	Zinc may be any zinc plating from PIN codes J, R, and Z with a colored chromate coating. 4/

1/ Embrittlement test need not be run. Cadmium shall not be used in oxygen or potable water systems.
2/ The zinc-nickel alloy plate shall contain 12% to 16% nickel. The coating thickness shall be 315µ inches (8µm) minimum.
3/ Hexavalent chromium free. Finish shall be ROHS compliant.
4/ Not for use in aircraft. Requires approval from the Program Office for all applications.
5/ A pretreatment, a modification of the fluoride treatment, or a post treatment shall be applied so the final color of the fittings shall be similar to FED-STD-595 colors 36076 through 36293. Titanium shall not be used in oxygen or potable water systems.

Trivalent wrenchability. When the finish has been damaged due to poor wrenchability, the surface of the connector shall be touched up using one of the brush plating processes below as appropriate to primary finish. The term “trivalent wrenchability” is used to evaluate the ability of the finish to withstand abrasion from an excessive amount of wrenching.

a. Brush plating of hard chromium by electrodeposition shall be in accordance with SAE-AMS-2451/5.
b. Brush plating of medium-hardness, low stress nickel by electrodeposition shall be in accordance with SAE-AMS-2451/9.

Maximum operating pressure. Maximum operating pressure shall be in accordance with SAE-J514.

Downloaded from http://www.everyspec.com

PIN: The PIN consists of the letters “MS”, the specification number, a dash, number for reducer size, and a letter for material finish designator.

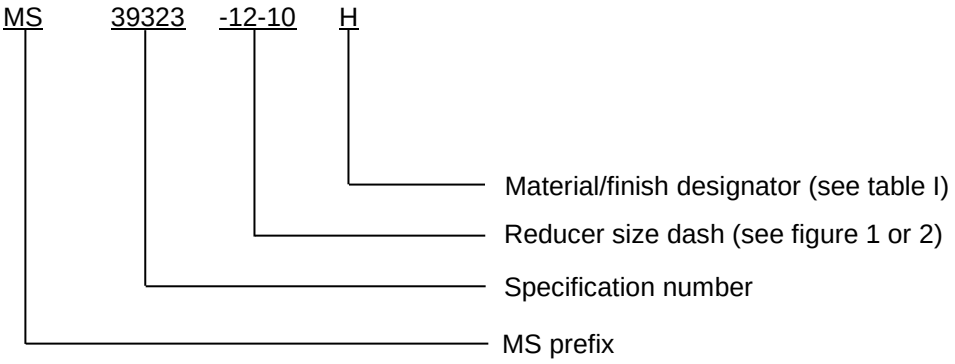

PIN example: MS39323-12-10H indicates a tube reducer, 3/4 inch OD tube to 5/8 inch OD tube, steel with zinc-aluminum.

Cadmium is not recommended. To the users of this document, it is recommended that the use of carbon steel material with cadmium plating be used only when other materials and finishes specified in this document cannot meet performance requirements.

Order of precedence. Unless otherwise noted herein or in the contract, in the event of a conflict between the text of this document and the references cited herein, the text of this document takes precedence. Nothing in this document, however, supersedes applicable laws and regulations unless a specific exemption has been obtained.

Referenced documents shall be of the issue in effect on date of invitations for bid.

Referenced documents. In addition to MIL-DTL-18866, this document references the following:

FED-STD-595/36076	FED-STD-595/36173	MIL-DTL-16232	SAE-AMS2417
FED-STD-595/36081	FED-STD-595/36176	ASTM B117	SAE-AMS2451/5
FED-STD-595/36099	FED-STD-595/36231	ASTM B633	SAE-AMS2451/9
FED-STD-595/36118	FED-STD-595/36251	ASTM B695	SAE-AMS2486
FED-STD-595/36134	FED-STD-595/36270	ASTM F1136/F1136M	SAE-AMS2488
FED-STD-595/36152	FED-STD-595/36280	SAE-AMS-C-81562	SAE-AMS2700
FED-STD-595/36170	FED-STD-595/36293	SAE-AMS-QQ-P-416	SAE-J514

Downloaded from http://www.everyspec.com

CONCLUDING MATERIAL

Custodians:
Army - AT
Navy - SH
Air Force - 99
DLA - CC

Review activities:
Army - AR, MI
Navy - CG, MC, SA
Air Force - 71

Preparing activity:
DLA - CC

(Project 4730-2017-003)

NOTE: The activities listed above were interested in this document as of the date of this document. Since organizations and responsibilities can change, you should verify the currency of the information above using the ASSIST Online database at https://assist.dla.mil.