Downloaded from http://www.everyspec.com

INCH-POUND

MS39212H
24 March 2008
SUPERSEDING
MS39212G
29 March 2005

DETAIL SPECIFICATION SHEET

SLEEVES, COMPRESSION, TUBE - HOSE FITTING-
SAFETY SLEEVE TYPE

Inactive for new design after 29 December 1967. For new design, use SAE-J514.

This specification is approved for use by all Departments and Agencies of the Department of Defense.

The requirements for acquiring the product described herein shall consist of this specification sheet.

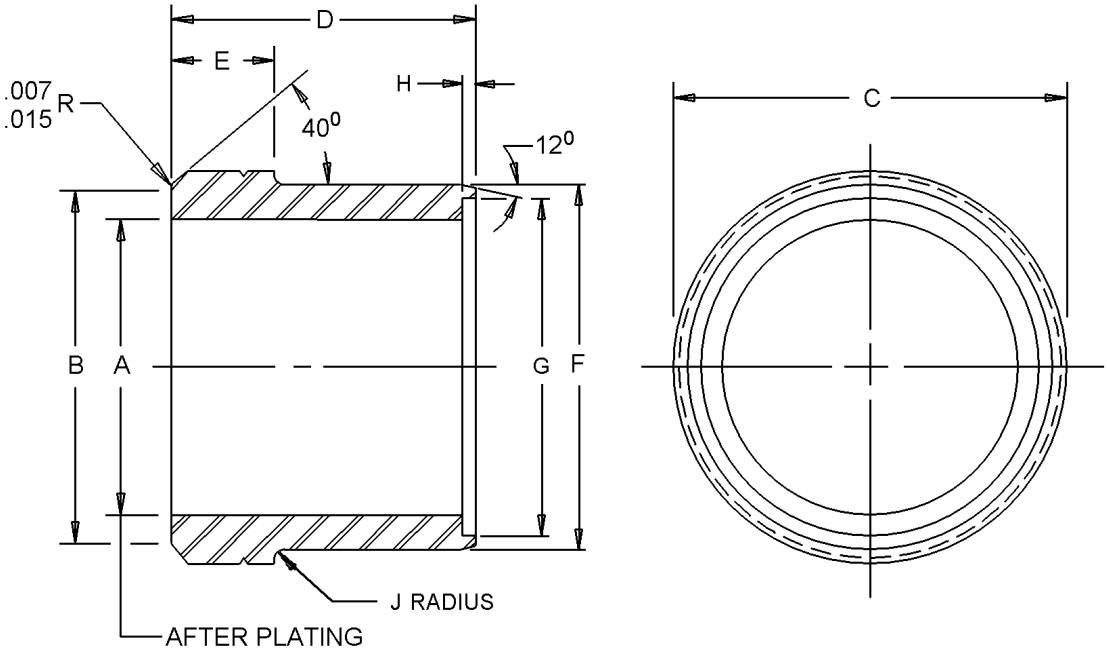

Inches	mm
.007	0.18
.015	0.38

FIGURE 1. Sleeves, compression, tube - hose fitting - safety sleeve type.

Downloaded from http://www.everyspec.com

Dash number	Tube O.D. Inches (mm)	A dia. Inches (mm)	B dia. Inches (mm)	C Inches (mm)	D Inches (mm)
1	.125 (3.18)	.129 (3.28) .131 (3.33)	.160 (4.06) .150 (3.81)	.213 (5.41) .203 (5.16)	.281 (7.14) .275 (6.99)
2	.188 (4.78)	.190 (4.83) .193 (4.90)	.250 (6.35) .230 (5.84)	.322 (8.18) .312 (7.92)	.281 (7.14) .275 (6.99)
3	.250 (6.35)	.255 (6.48) .258 (6.55)	.316 (8.03) .296 (7.52)	.380 (9.65) .370 (9.40)	.339 (8.61) .333 (8.46)
4	.313 (7.95)	.318 (8.08) .321 (8.15)	.379 (9.63) .359 (9.12)	.448 (11.38) .438 (11.13)	.339 (8.61) .333 (8.46)
5	.375 (9.53)	.380 (9.65) .383 (9.73)	.441 (11.20) .421 (10.69)	.505 (12.83) .495 (12.57)	.378 (9.60) .372 (9.45)
6	.500 (12.70)	.506 (12.85) .509 (12.93)	.567 (14.40) .547 (13.89)	.635 (16.13) .625 (15.88)	.378 (9.60) .372 (9.45)
7	.625 (15.88)	.633 (16.08) .636 (16.15)	.694 (17.63) .674 (17.12)	.760 (19.30) .750 (19.05)	.418 (10.62) .412 (10.46)
8	.750 (19.05)	.758 (19.25) .761 (19.33)	.819 (20.80) .799 (20.29)	.885 (22.48) .875 (22.23)	.418 (10.62) .412 (10.46)
9	.875 (22.23)	.883 (22.43) .886 (22.50)	.944 (23.98) .924 (23.47)	1.010 (25.65) 1.000 (25.40)	.418 (10.62) .412 (10.46)
10	1.000 (25.40)	1.008 (25.60) 1.011 (25.68)	1.069 (27.15) 1.049 (26.64)	1.135 (28.83) 1.125 (28.58)	.418 (10.62) .412 (10.46)
11	1.250 (31.75)	1.261 (32.03) 1.264 (32.11)	1.322 (33.58) 1.302 (33.07)	1.416 (35.97) 1.406 (35.71)	.418 (10.62) .412 (10.46)
12	1.500 (38.10)	1.511 (38.38) 1.514 (38.46)	1.572 (39.93) 1.552 (39.42)	1.666 (42.32) 1.656 (42.06)	.418 (10.62) .412 (10.46)

FIGURE 1. Sleeves, compression, tube - hose fitting - safety sleeve type - Continued.

Downloaded from http://www.everyspec.com

Dash number	E Inches (mm)	F dia. Inches (mm)	G dia. Inches (mm)	H Inches (mm)	J radius Inches (mm)
1	.084 (2.13) .078 (1.98)	.178 (4.52) .175 (4.45)	.140 (3.56)	.015 (0.38) .023 (0.58)	.010 (.25)
2	.084 (2.13) .078 (1.98)	.256 (6.50) .252 (6.40)	.205 (5.21)	.020 (0.51) .028 (0.71)	.020 (0.51)
3	.102 (2.59) .096 (2.44)	.338 (8.59) .334 (8.48)	.268 (6.81)	.024 (0.61) .038 (0.97)	.020 (0.51)
4	.102 (2.59) .096 (2.44)	.400 (10.16) .396 (10.06)	.330 (8.38)	.024 (0.61) .038 (0.97)	.020 (0.51)
5	.122 (3.10) .116 (2.95)	.461 (11.71) .457 (11.61)	.393 (9.98)	.024 (0.61) .038 (0.97)	.020 (0.51)
6	.122 (3.10) .116 (2.95)	.589 (14.96) .585 (14.86)	.521 (13.23)	.024 (0.61) .038 (0.97)	.020 (0.51)
7	.122 (3.10) .116 (2.95)	.715 (18.16) .711 (18.06)	.647 (16.43)	.024 (0.61) .038 (0.97)	.020 (0.51)
8	.122 (3.10) .116 (2.95)	.840 (21.34) .836 (21.23)	.772 (19.61)	.024 (0.61) .038 (0.97)	.020 (0.51)
9	.122 (3.10) .116 (2.95)	.965 (24.51) .961 (24.41)	.897 (22.78)	.024 (0.61) .038 (0.97)	.020 (0.51)
10	.122 (3.10) .116 (2.95)	1.090 (27.69) 1.086 (27.58)	1.022 (25.96)	.024 (0.61) .038 (0.97)	.020 (0.51)
11	.122 (3.10) .116 (2.95)	1.344 (34.14) 1.340 (34.04)	1.275 (32.39)	.024 (0.61) .038 (0.97)	.020 (0.51)
12	.122 (3.10) .116 (2.95)	1.593 (40.46) 1.589 (40.36)	1.524 (38.71)	.024 (0.61) .038 (0.97)	.020 (0.51)

NOTES:
1. Dimensions are in inches, unless otherwise specified.
2. Metric equivalents are given for information only.
3. Unless otherwise specified, tolerance for 3 place decimals is ± .005 inch (0.13 mm), tolerance for fractions is ± 1/64, tolerance for degrees is ± 2°.
4. This illustration is for identification and is not intended to restrict designs or shapes not dimensioned.

FIGURE 1. Sleeves, compression, tube - hose fitting - safety sleeve type - Continued.

REQUIREMENTS:

Dimensions and configuration: See figure 1.

Material: Carbon steel AISI-C1112, AISI-C1113, AISI-C1117, AISI-C1118 or AISI-C1137 in accordance with SAE-AMS-STD-66.

Finish: All plating's shown in table I shall be capable of meeting the 96 hour salt spray test in accordance with ASTM B117.

Downloaded from http://www.everyspec.com

TABLE I. Material and finish designators.

Designator	Material	Finish
Blank	Steel	Cadmium plating in accordance with SAE-AMS-C-81562, type II, class 3 or SAE-AMS-QQ-P-416, type II, class 2.
N	Steel	NAVAIR trivalent chromium pretreatment (TCP) in accordance with MIL-DTL-81706, type II, class 1a.
J	Steel	Zinc plating with chromate conversion in accordance with ASTM B633; type II or III, Fe/Zn 5, or ASTM B695, type II, class 5.
H	Steel	Zinc phosphate in accordance with MIL-DTL-16232, type Z, class 1 and shall be hexavalent chromium free.
P	Steel	Zinc plating with colorless passivate in accordance with ASTM B633, type VI, Fe/Zn 5.
S	Corrosion resistant steel 1/	No additional finish. Passivation in accordance with SAE-AMS2700, type 6 or 7. 1/
V	Steel	Zinc nickel in accordance with SAE-AMS2417, type 1.

1/ Stainless steel of such hardness as to be capable of biting, fully annealed type 304 stainless steel tubing.

Part or Identifying Number (PIN) example:

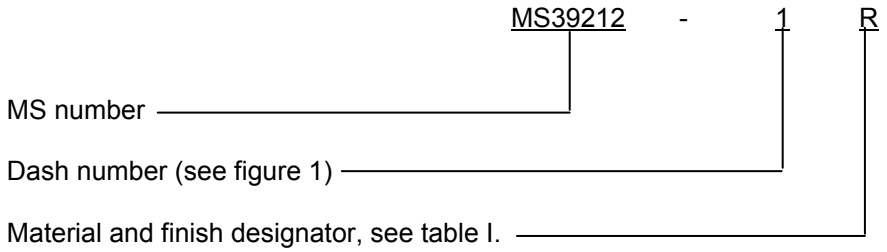

Guidance on use of alternative parts with less hazardous or nonhazardous materials. This specification provides for a number of alternative plating materials via the PIN. Users should select the PIN with the least hazardous material that meets the form, fit and function requirements of their application.

For old designs that use compression sleeves in accordance with MS39212, table II shows supersession data to compression sleeves in accordance with SAE-J514. These replacements are for new design. Users are cautioned to evaluate replacements for their particular application.

Downloaded from http://www.everyspec.com

TABLE II. Supersession data.

Inactive PIN Compression	Active SAE PIN 1/	Inactive PIN Compression	Active SAE PIN 2/
MS39212-1A	J514-2-080115ACQ	MS39212-1AP	J514-2-080115ACP
MS39212-2A	J514-3-080115ACQ	MS39212-2AP	J514-3-080115ACP
MS39212-3A	J514-4-080115ACQ	MS39212-3AP	J514-4-080115ACP
MS39212-4A	J514-5-080115ACQ	MS39212-4AP	J514-5-080115ACP
MS39212-5A	J514-6-080115ACQ	MS39212-5AP	J514-6-080115ACP
MS39212-6A	J514-8-080115ACQ	MS39212-6AP	J514-8-080115ACP
MS39212-7A	J514-10-080115ACQ	MS39212-7AP	J514-10-080115ACP
MS39212-8A	J514-12-080115ACQ	MS39212-8AP	J514-12-080115ACP
MS39212-9A	J514-14-080115ACQ	MS39212-9AP	J514-14-080115ACP
MS39212-10A	J514-16-080115ACQ	MS39212-10AP	J514-16-080115ACP
MS39212-11A	J514-20-080115ACQ	MS39212-11AP	J514-20-080115ACP
MS39212-12A	J514-24-080115ACQ	MS39212-12AP	J514-24-080115ACP
Inactive PIN Compression	**Active SAE PIN 3/**	**Inactive PIN Compression**	**Active SAE PIN 4/**
MS39212-1AJ or R	J514-2-080115ACZ	MS39212-1ASS	J514-2-080115AS
MS39212-2AJ or R	J514-3-080115ACZ	MS39212-2ASS	J514-3-080115AS
MS39212-3AJ or R	J514-4-080115ACZ	MS39212-3ASS	J514-4-080115AS
MS39212-4AJ or R	J514-5-080115ACZ	MS39212-4ASS	J514-5-080115AS
MS39212-5AJ or R	J514-6-080115ACZ	MS39212-5ASS	J514-6-080115AS
MS39212-6AJ or R	J514-8-080115ACZ	MS39212-6ASS	J514-8-080115AS
MS39212-7AJ or R	J514-10-080115ACZ	MS39212-7ASS	J514-10-080115AS
MS39212-8AJ or R	J514-12-080115ACZ	MS39212-8ASS	J514-12-080115AS
MS39212-9AJ or R	J514-14-080115ACZ	MS39212-9ASS	J514-14-080115AS
MS39212-10AJ or R	J514-16-080115ACZ	MS39212-10ASS	J514-16-080115AS
MS39212-11AJ or R	J514-20-080115ACZ	MS39212-11ASS	J514-20-080115AS
MS39212-12AJ or R	J514-24-080115ACZ	MS39212-12ASS	J514-24-080115AS

1/ Designator “C” is for steel, “Q” is for cadmium plating.
2/ Designator “C” is for steel, “P” is for zinc phosphate plating.
3/ Designator “C” is for steel, “Z” is for zinc plating.
4/ Designator “S” is for corrosion resistant steel.

Changes from previous issue. Marginal notations are not used in this revision to identify changes with respect to the previous issue due to the extent of the changes.

Referenced documents. This document references the following:

MIL-DTL-16232
MIL-DTL-81706
ASTM B117
ASTM B633
ASTM B695
SAE-AMS-C-81562
SAE-AMS2417
SAE-AMS2700
SAE-AMS-STD-66
SAE-AMS-QQ-P-416
SAE-J514

Downloaded from http://www.everyspec.com

CONCLUDING MATERIAL

Custodians:
Army - AT
Navy - SH
DLA - CC

Preparing activity:
DLA - CC

(Project 4730-2007-114)

Review activities:
Army - AR
Navy - AS, MC, SA

NOTE: The activities listed above were interested in this document as of the date of this document. Since organizations and responsibilities can change, you should verify the currency of the information above using the ASSIST Online database at http://assist.daps.dla.mil.