Downloaded from http://www.everyspec.com

INCH-POUND

MS35257C
10 November 2009
SUPERSEDING
MS35257B
4 September 1992

DETAIL SPECIFICATION SHEET

# BRACE, CORNER, BOX, LARGE, 2 QUARTER-ELLIPSE FLANGES, 2 MOUNTING HOLES

Inactive for new design after 31 July 1997.

This specification sheet is approved for use by all Departments and Agencies of the Department of Defense.

The requirements for acquiring the product described herein shall consist of this specification sheet.

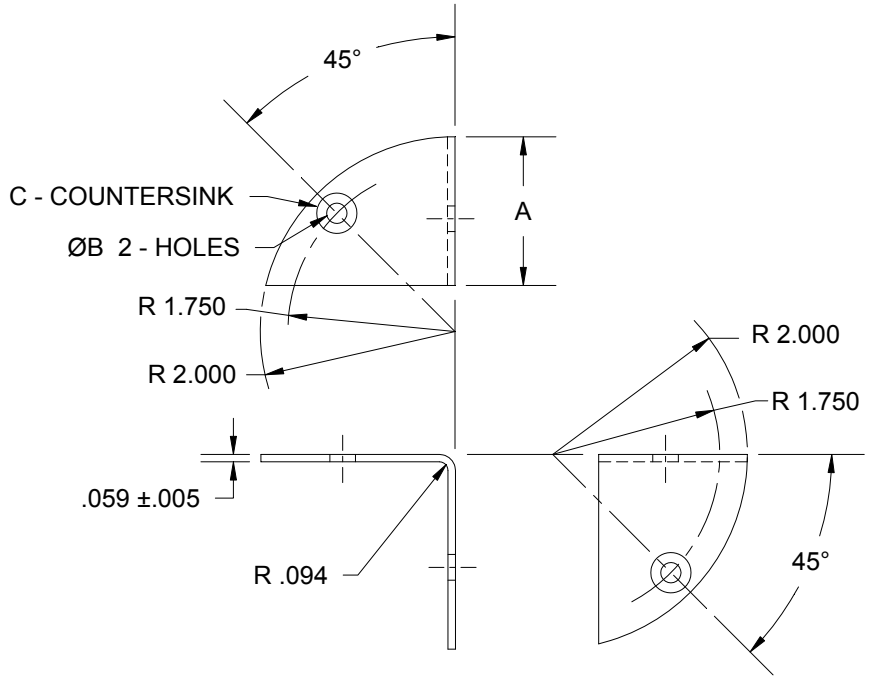


FIGURE 1. Brace.

Downloaded from http://www.everyspec.com



TABLE I. Part Numbers and Dimensions.

| PART NUMBER | DIMENSIONS | | | MATERIAL |
|---|---|---|---|---|
| | A LENGTH | ∅B | C COUNTERSINK | |
| MS35257-1 | 1.375 | .204 | 82° TO ∅.375 +.016 | BRASS |
| MS35257-2 | 1.375 | .204 | NONE | |
| MS35257-3 | 1.375 | .180 | 82° TO ∅.328 +.016 | |
| MS35257-4 | 1.375 | .180 | NONE | |
| MS35257-5 | 1.250 | .204 | 82° TO ∅.375 +.016 | |
| MS35257-6 | 1.250 | .204 | NONE | |
| MS35257-7 | 1.250 | .180 | 82° TO ∅.328 +.016 | |
| MS35257-8 | 1.250 | .180 | NONE | |
| MS35257-9 | 1.125 | .204 | 82° TO ∅.375 +.016 | |
| MS35257-10 | 1.125 | .204 | NONE | |
| MS35257-11 | 1.125 | .180 | 82° TO ∅.328 +.016 | |
| MS35257-12 | 1.125 | .180 | NONE | |
| MS35257-13 | 1.375 | .204 | 82° TO ∅.375 +.016 | STEEL |
| MS35257-14 | 1.375 | .204 | NONE | |
| MS35257-15 | 1.375 | .180 | 82° TO ∅.328 +.016 | |
| MS35257-16 | 1.375 | .180 | NONE | |
| MS35257-17 | 1.250 | .204 | 82° TO ∅.375 +.016 | |
| MS35257-18 | 1.250 | .204 | NONE | |
| MS35257-19 | 1.250 | .180 | 82° TO ∅.328 +.016 | |
| MS35257-20 | 1.250 | .180 | NONE | |
| MS35257-21 | 1.125 | .204 | 82° TO ∅.375 +.016 | |
| MS35257-22 | 1.125 | .204 | NONE | |
| MS35257-23 | 1.125 | .180 | 82° TO ∅.328 +.016 | |
| MS35257-24 | 1.125 | .180 | NONE | |

Requirements:

1. Material:

   Brass, in accordance with ASTM B121/B121M, H02 (half-hard).
   Steel, in accordance with QQ-S-698, cold rolled, commercial quality, No. 2 temper, No. 1 finish.

2. Finish:

   Brass, plain.
   Steel, zinc plated in accordance with ASTM B633, Type IV, SC3.

3. Tolerance: Tolerances on decimals ±.016, on angles ±1°, unless otherwise specified.

Downloaded from http://www.everyspec.com



4. Part number: The part number consists of the basic specification sheet number plus the dash number.

Example: MS35257 - 1

Dash number

Basic specification sheet number

Notes:

1. All dimensions are in inches, unless otherwise specified.

2. In the event of a conflict between the text of this standard and the references cited herein, the text of this standard shall take precedence.

3. Changes from previous issue. Marginal notations are not used in this revision to identify changes with respect to the previous issue due to the extent of the changes.

Custodians:
Army - CR
Navy - YD
Air Force – 99

Preparing Activity:
DLA -IS

(Project 5340-2009-026)

NOTE: The activities listed above were interested in this document as of the date of this document. Since organizations and responsibilities can change, you should verify the currency of the information above using the ASSIST Online database at http://assist.daps.dla.mil.