Downloaded from http://www.everyspec.com

NOTICE: When Government drawings, specifications, or other data are used for any purpose other than in connection with a definitely related Government procurement operation, the United States Government thereby incurs no responsibility, nor any obligation whatsoever; and the fact that the Government may have formulated, furnished, or in any way supplied the said drawings, specifications, or other data is not to be regarded by implication or otherwise as in any manner licensing the holder or any other person or corporation, or conveying any rights or permission to manufacture, use, or sell any patented invention that may in any way be related thereto.

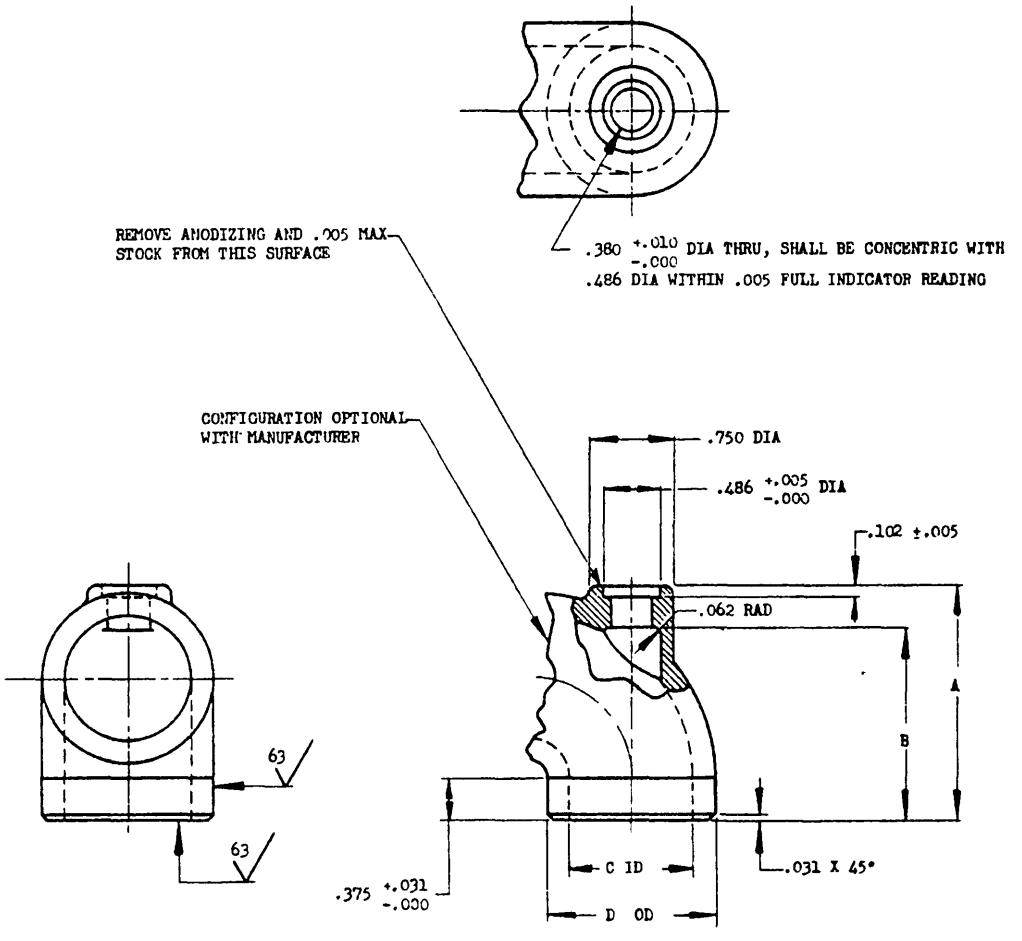

MS DASH NO. PORT SIZE AND TUBE SIZE	TUBING OD REF	A	B	C DIA	D +.000 -.005 DIA
-1-8	.500	1.375	1.000	.500	.745
-2-16	1.000	1.969	1.594	1.188	1.495
-2-20	1.250	2.344	1.969		
-2-24	1.500	2.719	2.344		
-2-32	2.000	2.969	2.594		
-3-24	1.500	2.719	2.344	1.547	1.870
-3-32	2.000	2.969	2.594		
-4-40	2.500	3.281	2.906	1.875	2.245
-4-48	3.000	3.562	3.188		

MATERIAL: ALUMINUM ALLOY, SPEC QQ-A-596, COMP. NO. 8.

FINISH: RED ANODIC FILM, SPEC MIL-A-8625.

FOR SURFACE ROUGHNESS, SEE STANDARD MIL-STD-10.

REMOVE ALL BURRS AND SHARP EDGES.

DIMENSIONS IN INCHES. UNLESS OTHERWISE SPECIFIED, TOLERANCES: CASTINGS ±.031, DECIMALS ±.010, ANGLES ±0°30'.

THIS IS A DESIGN STANDARD NOT USED AS A PART NUMBER

APPROVED 22 Jun 54 REVISED

CUSTODIANS	OTHER INT.	MILITARY STANDARD	MS33552 (ASG)
Navy - Bu&Ser Air Force	A - N - AF -	FITTING, VARIABLE CONFIGURATION, LOW PRESSURE, EXTERNAL OUTLET, BOOSTER PUMP	
PROCUREMENT SPECIFICATION		SUPERSEDES:	SHEET 1 OF 1