Downloaded from http://www.everyspec.com

FED. SUP CLASS
66GP

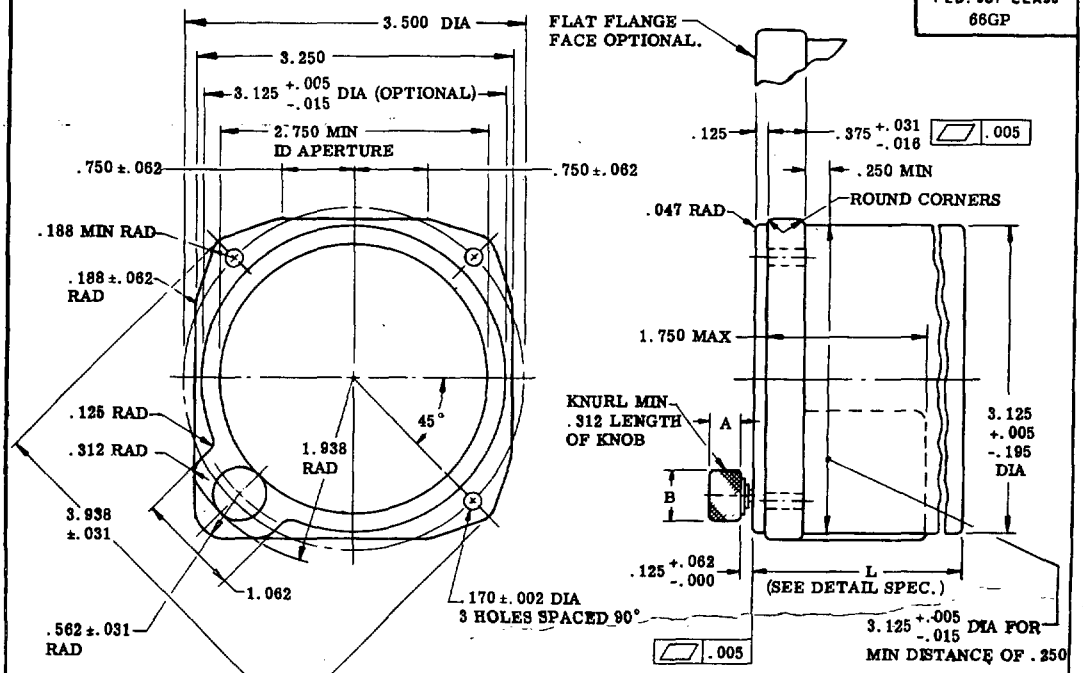

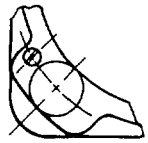

KNOB AND ADJUSTING SCREW

SLOTTED ADJUSTING SCREW ONLY

KNOB TYPE	A	B DIA
SHORT, FOR UV LIGHT	.312	.562 ±.062
LONG, FOR RED LIGHT	.688	.500

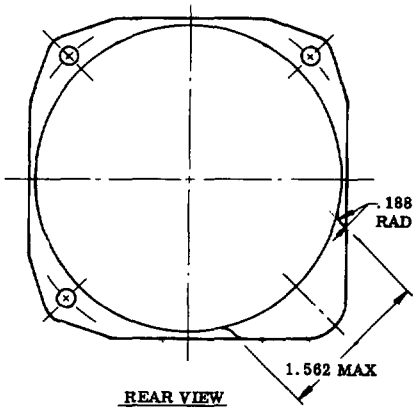

REAR VIEW

NOTES:

1. DIMENSIONS IN INCHES. UNLESS OTHERWISE SPECIFIED, TOLERANCE: DECIMALS ±.016, ANGLES ±.0°15' DIMENSIONING AND TOLERANCING IN ACCORDANCE WITH USASI Y14.5 - 1966.
2. ALL SCREWS AND NUTS, EXCEPT MOUNTING NUTS SHALL BE FLUSH WITH MOUNTING FACES.
3. FOR INSTALLATION, CLEARANCE SHALL BE ALLOWED FOR THE MAXIMUM OVER-ALL DIMENSIONS SHOWN ON THE DRAWING.

*CERTAIN PROVISIONS (CASE INFORMATION) OF THIS STANDARD ARE THE SUBJECT OF INTERNATIONAL STANDARDIZATION AGREEMENT ASCC, AIR STANDARD 10/7 AND STANAG 3319. WHEN AMENDMENT, REVISION, OR CANCELLATION OF THIS STANDARD IS PROPOSED WHICH WILL EFFECT OR VIOLATE THE INTERNATIONAL AGREEMENT CONCERNED THE PREPARING ACTIVITY WILL TAKE APPROPRIATE RECONCILIATION ACTION THROUGH INTERNATIONAL STANDARDIZATION CHANNELS INCLUDING DEPARTMENTAL STANDARDIZATION OFFICES, IF REQUIRED.

THIS IS A DESIGN STANDARD. NOT TO BE USED AS A PART NUMBER.

(B) ENTIRE STANDARD REVISED AND REDRAWN.

PROJECT 66GP-N001

APPROVED 15 APRIL 54 REVISED (A) 20 SEPT 55 (B) 15 APRIL 69

This standard has been approved by the NAVAL AIR SYSTEMS COMMAND Department of the NAVY and is mandatory for use by that activity. All other military activities are required to employ this standard where suitable.

P.A. NAVY-AS Other Cust	INTERNATIONAL INTEREST *	TITLE CASE, INSTRUMENT, 2-3/4 DIAL, WITH SUMP, STANDARD DIMENSIONS FOR	MILITARY STANDARD MS33549(AS)
PROCUREMENT SPECIFICATION NONE		SUPERSEDES: AND10402 & MS33549(ASG)	SHEET 1 OF 1

DD FORM 1 SEP 57 672-1 (Limited coordination) PREVIOUS EDITIONS OF THIS FORM ARE OBSOLETE. PLATE NO. 17709

☆ U. S. GOVERNMENT PRINTING OFFICE: 1977-703-020/4833