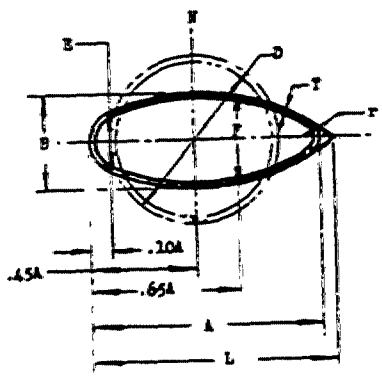

STREAMLINE

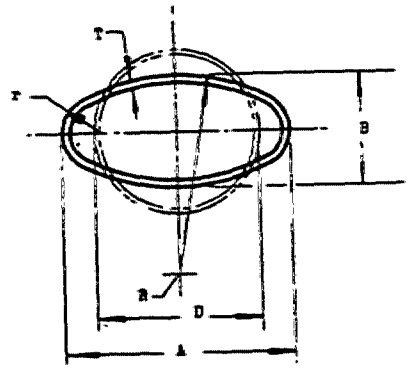

OVAL

FORMULAS FOR DETERMINING NOMINAL TUBING DIMENSIONS

D = DIAMETER OF ROUND TUBING

(SHAPES PRODUCED BY DRAWING PROCESS)

STREAMLINE	
DESIGN REFERENCE DIMENSIONS	INSPECTION REFERENCE DIMENSIONS
N = NEUTRAL AXIS AT .45A	A = 1.3486D
L = CONSTRUCTION POINT = 2.5B	B = .9714D
r = .1085D APPROX	E = .411D
	F = .457D

OVAL	
DESIGN REFERENCE DIMENSIONS	INSPECTION REFERENCE DIMENSIONS
B = $\frac{A}{2}$	A = 1.30D
R = 1.10D APPROX RAD	B = .65D
r = .206D APPROX RAD	

DASH NUMBERS		DIMENSIONS							
		DIAMETER D	(a) WALL THICKNESS T	WIDTH A MAJOR AXIS		WIDTH B MINOR AXIS		WIDTH E	WIDTH F
STREAMLINE	OVAL			STREAMLINE	OVAL	STREAMLINE	OVAL	STREAMLINE	STREAMLINE
S16	16	1.00	.035	1.349	1.300	.571	.650	.411	.457
S20	20	1.25	.035	1.685	1.625	.714	.812	.514	.572
S24	24	1.50	.035	2.023	1.950	.857	.975	.617	.686
S28	28	1.75	.049	2.360	2.275	1.000	1.138	.720	.801
S32	32	2.00	.049	2.697	2.600	1.143	1.300	.823	.916
S36	36	2.25	.058	3.035	2.925	1.286	1.462	.926	1.030
S40	40	2.50	.058	3.372	3.250	1.429	1.625	1.029	1.145
S44	44	2.75	.065	3.708	3.575	1.571	1.787	1.131	1.258
S48	48	3.00	.065	4.045	3.900	1.714	1.950	1.234	1.373
S52	52	3.25	.083	4.383	4.225	1.857	2.113	1.337	1.487
S56	56	3.50	.083	4.720	4.550	2.000	2.275	1.440	1.602
S60	60	3.75	.083	5.057	4.875	2.143	2.437	1.543	1.717
S64	64	4.00	.083	5.394	5.200	2.285	2.600	1.645	1.830
S68	68	4.25	.095	5.732	5.525	2.428	2.762	1.748	1.945
S72	72	4.50	.095	6.069	5.850	2.571	2.925	1.851	2.059
S76	76	4.75	.125	6.406	6.175	2.714	3.087	1.954	2.174
S80	80	5.00	.125	- -	6.500	- -	3.250	- -	- -

(a) WALL THICKNESS AS SHOWN IS THE MINIMUM THICKNESS AVAILABLE.

FOR SIZES OTHER THAN STANDARD THE PROCURING ACTIVITY SHALL PROVIDE A DRAWING WITH INVITATIONS AND CONTRACTS.

DIMENSIONS IN INCHES

APPROVED 26 Jan 1953 REVISED

THIS IS A DESIGN STANDARD, NOT USED AS A PART NUMBER.

CUSTODIAN Navy - BuAer
Air Force

PROCUREMENT SPECIFICATION
NONE

MILITARY STANDARD

STANDARD DIMENSIONS FOR STREAMLINE AND OVAL TUBULAR SHAPES

MS33534(ASG)

SHEET 1 OF 1

SUPERSEDES AND10112