DISTRIBUTION STATEMENT A. Approved for public release; distribution is unlimited.

This military standard is approved for use by all Departments and Agencies of the Department of Defense. Selection for all new engineering and design applications and for repetitive use shall be made from this document when applicable.

Review activities: Army - AR
Navy - EC, SH
Air Force - 11, 17, 99

User activities: Army - AV
Navy - MC
Air Force -

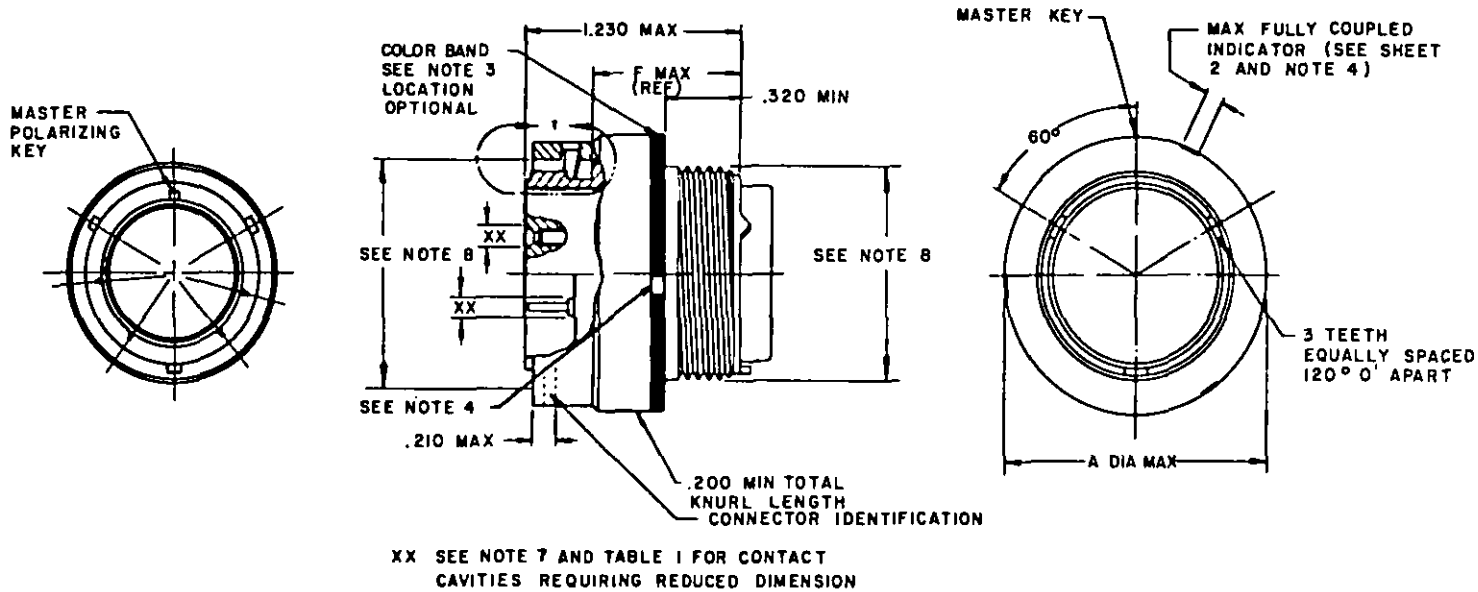

XX SEE NOTE 7 AND TABLE I FOR CONTACT CAVITIES REQUIRING REDUCED DIMENSION

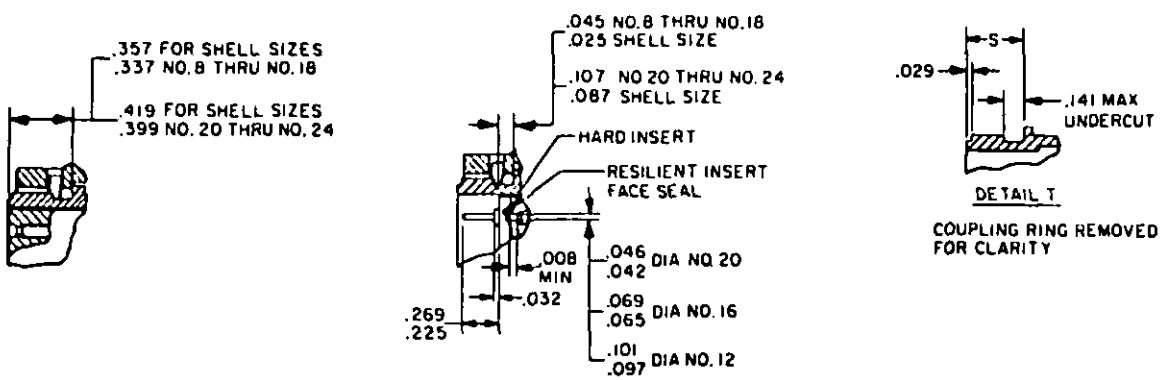

P.A ARMY-CR

Other Cust NAVY-AS AF-85

International Interest

Procurement Specification MIL-C-26482

(D) "ENTIRE STANDARD REVISED"

TITLE CONNECTORS, PLUG, ELECTRIC, SERIES 2, CRIMP TYPE, BAYONET COUPLING, CLASSES A, L, S AND W

SUPERSEDES: MS 3476 (NAVY) MIL-C-83723/13B MIL-C-83723/14B

MILITARY STANDARD

MS3476

PAGE 1 OF 4

FED. SUP CLASS 5935

APPROVED 1 APR 71 REVISED (D) 12 Jul 85

DD FORM 1 MAY 73 672 (Coordinated) PREVIOUS EDITIONS OF THIS FORM ARE OBSOLETE

5935-3465-6

Downloaded from http://www.everyspec.com

Downloaded from http://www.everyspec.com

FED. SUP CLASS
5935

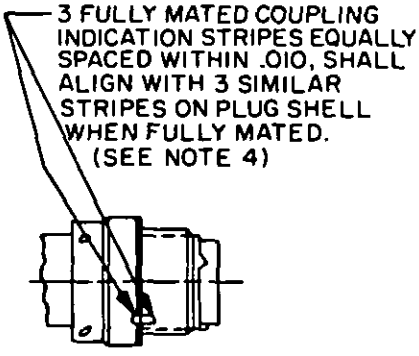

COUPLED POSITION

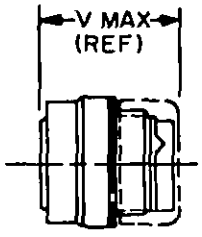

ASSEMBLED TO STRAIGHT BACKSHELL LESS STRAIN RELIEF
(SEE NOTE 6)

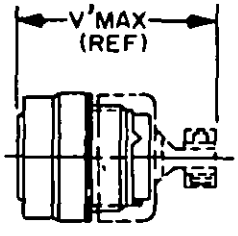

ASSEMBLED TO STRAIGHT BACKSHELL WITH STRAIN RELIEF
(SEE NOTE 6)

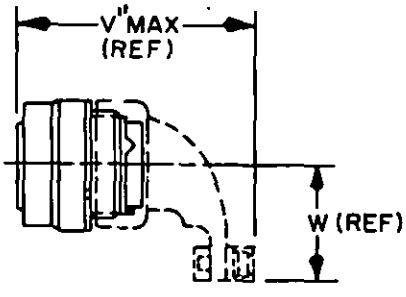

ASSEMBLED TO 90° BACKSHELL WITH STRAIN RELIEF
(SEE NOTE 6)

APPROVED 1 APR 71 REVISED (D) FOR CHANGES SEE PAGES 1,2,3 AND 4 12 Jul 85

User activities: Army - AV Navy - MC Air Force -
Review activities: Army - AR Navy - EC, SH Air Force - 11, 17, 99

This military standard is approved for use by all Departments and Agencies of the Department of Defense. Selection for all new engineering and design applications and for repetitive use shall be made from this document when applicable.

P.A ARMY-CR Other Cust NAVY-AS AF-85	International interest	TITLE CONNECTORS, PLUG, ELECTRIC, SERIES 2, CRIMP TYPE, BAYONET COUPLING, CLASSES A, L, S AND W	MILITARY STANDARD MS3476
Procurement Specification MIL-C-26482		SUPERSEDES: MS 3476 (NAVY) MIL-C-83723/13B MIL-C-83723/14B	PAGE 2 OF 4

Downloaded from http://www.everyspec.com

INCHES	MM
.008	0.20
.010	0.25
.025	0.64
.029	0.74
.032	0.81
.042	1.07
.045	1.14
.046	1.17
.065	1.65
.069	1.75
.087	2.21
.097	2.46
.101	2.57
.107	2.72
.141	3.58
.200	5.08
.210	5.33
.225	5.72
.269	6.83
.320	8.13
.337	8.56
.357	9.07
.399	10.13
.419	10.64
1.230	31.24

Size	A	F	S	V	V'	V"	W	Max weight (lbs)* Pin	Socket
8	.782 (19.86)	.887 (22.53)	.363/.343 (9.22/8.71)	1.507 (38.28)	1.857 (47.17)	2.130 (54.10)	.830 (21.08)	.0204 (.518)	.0216 (.549)
10	.926 (23.52)	.887 (22.53)	.363/.343 (9.22/8.71)	1.507 (38.28)	1.857 (47.17)	2.130 (54.10)	.880 (22.35)	.0406 (1.031)	.0421 (1.069)
12	1.043 (26.49)	.887 (22.53)	.363/.343 (9.22/8.71)	1.507 (38.28)	1.857 (47.17)	2.265 (57.53)	.950 (24.13)	.0505 (1.283)	.0536 (1.361)
14	1.183 (30.05)	.887 (22.53)	.363/.343 (9.22/8.71)	1.507 (38.28)	2.092 (53.14)	2.355 (59.82)	1.010 (25.65)	.0639 (1.623)	.0692 (1.758)
16	1.305 (33.15)	.887 (22.53)	.363/.343 (9.22/8.71)	1.507 (38.28)	2.092 (53.14)	2.490 (63.25)	1.070 (27.18)	.0788 (2.002)	.0880 (2.235)
18	1.391 (35.33)	.887 (22.53)	.363/.343 (9.22/8.71)	1.507 (38.28)	2.092 (53.14)	2.589 (65.76)	1.130 (28.70)	.0864 (2.195)	.0957 (2.431)
20	1.531 (38.89)	.825 (20.96)	.425/.405 (10.80/10.29)	1.507 (38.28)	2.092 (53.14)	2.722 (69.14)	1.190 (30.23)	.1016 (2.581)	.1114 (2.830)
22	1.656 (42.06)	.825 (20.96)	.425/.405 (10.80/10.29)	1.507 (38.28)	2.092 (53.14)	2.845 (72.26)	1.260 (32.00)	.1241 (3.152)	.1363 (3.462)
24	1.777 (45.14)	.825 (20.96)	.425/.405 (10.80/10.29)	1.507 (38.28)	2.092 (53.14)	2.967 (75.36)	1.320 (33.53)	.1400 (3.556)	.1916 (4.867)

*Less contacts and accessories. Maximum weights do not apply to class S.

APPROVED 1 APR 71 REVISED (D) FOR CHANGES SEE PAGES 1,2,3 AND 4 12 Jul 85

User activities: Army - AV, Navy - MC, Air Force -
Review activities: Army - AR, Navy - EC, SH, Air Force - 11, 17, 99

This military standard is approved for use by all Departments and Agencies of the Department of Defense. Selection for all new engineering and design applications and for repetitive use shall be made from this document when applicable.

Downloaded from http://www.everyspec.com

TABLE I. Reduced diameters (XX).

Shell size	Insert arrangements	Contact cavities
8	-33 & -98	A, B, C
12	-10	C, G
14	-12	A, B, C, D, E, F, G, H
14	-18	A, C, E, G, J, L
14	-19	B, D, F, H, K, M
16	-26	A, B, C, D, E, F, G, H, J, K, L, M, N, P, R
18	-32	A, B, C, D, E, F, G, H, J, K, L, M, N, P, R, S, T
22	-41	A, B, C, D, E, F, G, H, J, K, L, M, N, P, R, S, T, U, V, W, X, Y

Connector part numbering

MS3476 L 24 - 61 P W

- MS number
- Class
- Shell size
- Insert arrangement
- Contact style
- Insert position

NOTES:

1. Dimensions are in inches.
2. Unless otherwise specified, tolerances are ±.005 (0.13 mm) for three place decimals and ±.01 (0.3 mm) for two place decimals, and angular tolerances are ±0° ±1° and 0° 0' ±30'.
3. Color band: .070 ±.031 wide, color blue.
4. Coupling indicator, color optional.
5. The complete requirements for procuring this connector described herein shall consist of this document and the issue in effect of MIL-C-26482.
6. Connector assembly must be used with a backshell. Backshell must be procured separately. See MIL-C-85049 for applicable backshells.
7. Insert arrangements requiring reduced diameters for raised seal barriers or lead-in chamfer on outer row of contact cavities as indicated. (See table II).
8. Intermateability and rear accessory interchangeability dimensions shall be in accordance with MIL-C-26482.
9. For insert arrangements see MIL-STD-1669.
10. Connector identification marking shall be in accordance with MIL-C-26482. Example: MS3476 L----, M83723-14 R----, (minimum height does not apply to shell sizes 8, 10 and 12).
11. Class E cancelled and replaced by class L.
12. For design feature purposes, this standard takes precedence over procurement documents referenced herein.
13. Referenced documents shall be of the issue in effect on date of invitations for bids.
14. Metric equivalents are given for general information only.
15. Metric equivalents are in parentheses.

REVISED (D) FOR CHANGES SEE PAGES 1,2,3 AND 4 12 Jul 85
APPROVED 1 APR 71

User activities: Army - AV, Navy - MC, Air Force -
Review activities: Army - AR, Navy - EC, SH, Air Force - 11, 17, 99

This military standard is approved for use by all Departments and Agencies of the Department of Defense. Selection for all new engineering and design applications and for repetitive use shall be made from this document when applicable.

P.A ARMY-CR Other Cust NAVY-AS AF-85	International interest	TITLE CONNECTORS, PLUG, ELECTRIC, SERIES 2, CRIMP TYPE, BAYONET COUPLING, CLASSES A, L, S AND W	MILITARY STANDARD MS3476
Procurement Specification MIL-C-26482		SUPERSEDES: MS 3476 (NAVY) MIL-C-83723/13B MIL-C-83723/14B	PAGE 4 OF 4