FED. SUP. CLASS
5935

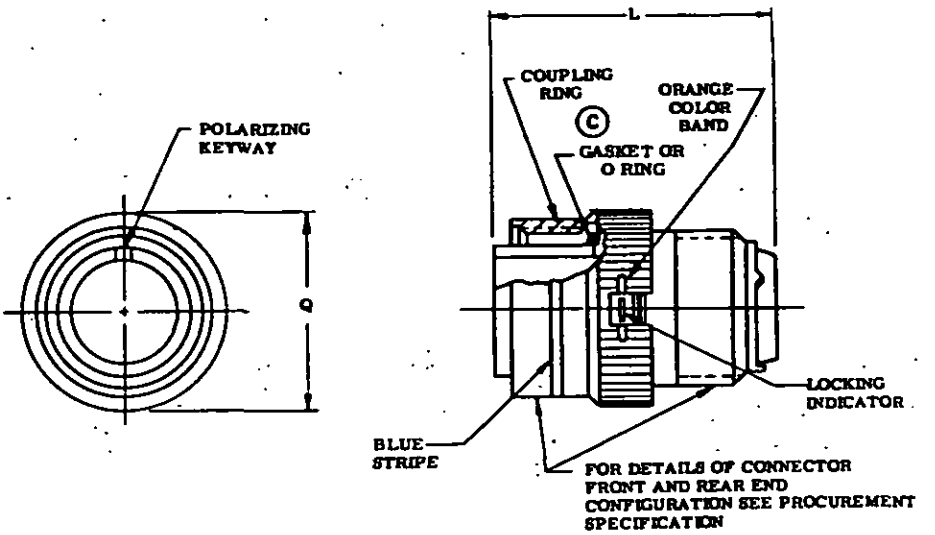

© CLASSES K, L AND W ENVIRONMENT RESISTANT

CLASS K CONNECTORS WITH ELECTROLESS NICKEL FINISH INACTIVE FOR DESIGN AFTER 11 June 1974, USE CLASS KT OR KS ©

NOTES:

1. DIMENSIONS IN INCHES. UNLESS OTHERWISE SPECIFIED, TOLERANCES: DECIMALS ± .016
2. DIMENSIONING AND TOLERANCING IN ACCORDANCE WITH USASI Y14.5-1966 (ANSI)
3. MIL-C-5015 CRIMP CONTACT FRONT AND REAR RELEASE CONNECTORS AND SOLDER CONTACT CONNECTORS ARE INTERMATEABLE.
4. UNLESS OTHERWISE SHOWN, CORRESPONDING FEATURES OF PIN AND SOCKET CONTACT CONNECTORS ARE IDENTICAL.
5. IN FULLY MATED CONDITION LOCKING INDICATOR SHALL BE ALIGNED WITHIN ORANGE COLOR BAND.
6. EXTRACTION TOOL MS3165-16 SHALL BE USED TO REMOVE SIZE 16 CONTACTS THAT ARE CRIMPED TO MIL-W-25038 OR MIL-W-27500 FIRE ZONE WIRE.
7. © FOR INSERT ARRANGEMENTS SEE MIL-STD-1651.

FOR DESIGN FEATURE PURPOSES, THIS STANDARD TAKES PRECEDENCE OVER PROCUREMENT DOCUMENTS REFERENCED HEREIN. REFERENCED DOCUMENTS SHALL BE OF THE ISSUE IN EFFECT ON DATE OF INVITATIONS FOR BID.

© FOR CHANGES SEE SHEETS 1,2,3 & 4

APPROVED DECEMBER 26 1972 REVISED © JANUARY 22, 1976

P.A NAVY-AS Other Cust: ARMY-EL AF-85	International interest:	TITLE © CONNECTORS, PLUG, ELECTRICAL, SELF-LOCKING, COUPLING NUT, REAR RELEASE, CRIMP CONTACT, AN TYPE	MILITARY STANDARD MS3459
Procurement Specification MIL-C-5015		SUPERSEDES:	SHEET 1 OF 4

DD FORM 1 SEP 63 672 (Coordinated) PREVIOUS EDITIONS OF THIS FORM ARE OBSOLETE.

PROJECT NO. 5935-1990-6

Reviewer activities: Army AT, AV, ME, MI, MU Navy EC Air Force 11, 17, 80, 85

User activities: Army Navy Air Force

FED. SUP CLASS
5935

User activities: Army, Navy, Air Force

Reviewer activities: Army AT, AV, ME, MI, MU
Navy EC
Air Force 11, 17, 80, 85

SIZE	L MAX SIZE 10 & 12 CONT.'S	L MAX SIZE 8, 4, & 0 CONT.'S	Q MAX
8 S	2.031		.963
10S			1.088
10SL			1.088
12S			1.213
12	2.125		1.213
14S	2.031		1.358
14	2.125		1.358
16S	2.031		1.463
16	2.125	2.500	1.463
18			1.588
20			1.713
22			1.788
24			1.963
28			2.213
32			2.463
36			2.713
40			2.963

EXAMPLE OF PART NO.

MS3459 K 28 21 P Y

- MS3459: BASIC PART NO.
- K: CLASS K
- MATERIAL DESIGNATOR S-STAINLESS STEEL T-FERROUS ALLOY WITH CADMIUM PLATE. THE FOLLOWING IS INACTIVE FOR DESIGN: LEAVE BLANK FOR FERROUS ALLOY WITH ELECTROLESS NICKEL
- 28: SHELL SIZE
- 21: INSERT ARRANGEMENT
- P: CONTACT DESIGNATOR
- Y: ALTERNATE INSERT POSITION W, X, Y, OR Z - LEAVE BLANK FOR NORMAL POSITION

APPROVED DECEMBER 26 1972 REVISED © FOR CHANGES SEE SHEETS 1,2,3&4

This military standard is approved for use by all Departments and Agencies of the Department of Defense. Selection for all new engineering and design applications and for repetitive use shall be made from this document.

P.A NAVY-AS Other Cust ARMY-EL AF-85	International interest	TITLE © CONNECTORS, PLUG, ELECTRICAL, SELF-LOCKING, COUPLING NUT, REAR RELEASE, CRIMP CONTACT, AN TYPE	MILITARY STANDARD MS3459
Procurement Specification MIL-C-5015		SUPERSEDES:	SHEET 2 OF 4

DD FORM 1 SEP 63 672 (Coordinated) PREVIOUS EDITIONS OF THIS FORM ARE OBSOLETE.

REQUIREMENTS:

1. QUALIFICATION: ONE CONNECTOR PAIR, CONSISTING OF A QUALIFIED CLASS K WALL MOUNTING RECEPTACLE WITH PIN CONTACTS, AND A SELFLOCKING MATING PLUG CONFORMING TO THIS MS STANDARD SHALL COMPRISE THE TEST SAMPLE. THEY SHALL BE OF A MEDIUM SHELL SIZE (18 TO 28) WITH MAXIMUM CONTACT DENSITY, AND SHALL BE FULLY WIRED WITH WIRE CONFORMING TO MIL-W-25038/1. QUALIFICATION TESTING FOR THE SELFLOCKING PLUG SHALL CONSIST OF THE FOLLOWING TESTS, PERFORMED IN THE SEQUENCE LISTED.

A. EXAMINATION OF PRODUCT.

B. COUPLING FORCES. SELF-LOCKING TYPE CONNECTORS SHALL NOT EXCEED THE COUPLING AND UNCOUPLING FORCES SPECIFIED IN TABLE I, BEFORE AND AFTER ANY CONDITIONING TESTS.

TABLE I. COUPLING AND UNCOUPLING FORCES

SHELL SIZE	TORQUE (INCH-POUNDS)		
	MAX. COUPLING	MIN. UNCOUPLING	MAX. UNCOUPLING
8S	12	8	20
10S & 10SL	14	8	25
12 & 12S	16	10	28
14 & 14S	20	12	35
16 & 16S	24	16	40
18	30	22	45
20	40	28	52
22	46	35	65
24	55	40	75
28	66	50	90
32	78	60	105
36	93	65	115
40	106	70	125

C. ICE RESISTANCE. THE FULLY MATED SELF-LOCKING PAIR SHALL BE IMMERSED IN TAP WATER FOR ONE MINUTE AND THEN PLACED IN AN AMBIENT OF -55° C FOR ONE HOUR. A MINIMUM OF 3 SUCH CYCLES SHALL BE PERFORMED UNTIL THE CONNECTOR SURFACES ARE COMPLETELY ICED OVER. IMMEDIATELY AFTER REMOVAL FROM THE LAST CYCLE AT THE LOW AMBIENT, THE FROZEN SELF-LOCKING CONNECTORS SHALL BE UNMATED USING CONNECTOR PLIERS OR STRAP WRENCH, AND REMATED. THE SELF-LOCKING CONNECTORS SHALL BE CAPABLE OF FUNCTIONING DURING AND AFTER THIS TEST, AND THE UNMATING AND MATING PROCESS SHALL NOT CAUSE DAMAGE TO THE LOCKING MECHANISM. IN ADDITION THE CONNECTORS SHALL MEET THE COUPLING AND UNCOUPLING FORCES OF TABLE I.

D. DURABILITY. THE TEST SAMPLE CONNECTOR PAIR SHALL SHOW NO EVIDENCE OF MECHANICAL OR ELECTRICAL DEFECTS DETRIMENTAL TO THE OPERATION OF THE CONNECTOR AFTER BEING MATED AND UNMATED 500 TIMES AT A MAXIMUM RATE OF 300 CYCLES PER HOUR, WITH THE COUPLING RINGS ATTACHED.

E. VIBRATION.

(1) MOUNTING. THE RECEPTACLE PORTION OF THE CONNECTOR PAIR SHALL BE MOUNTED ON A SUITABLE FIXTURE, WHICH IN TURN, SHALL BE MOUNTED TO A VIBRATION TABLE. A SUITABLE SENSOR SHALL MONITOR THE VIBRATION OF THE RECEPTACLE ON OR NEAR THE RECEPTACLE. THE SELF-LOCKING PLUG SHALL BE ENGAGED WITH THE RECEPTACLE AND HELD BY MEANS OF THE SELF-LOCKING COUPLING NUT. THE WIRE BUNDLES SHALL BE CLAMPED TO NONVIBRATING POINTS AT LEAST 8 INCHES FROM THE REAR OF THE CONNECTOR TO AVOID RESONANCE OF THE WIRE BUNDLE.

(2) VIBRATION PROCEDURE. AFTER MOUNTING, THE MATED ASSEMBLY SHALL BE VIBRATED IN ACCORDANCE WITH METHOD 204, CONDITION B OF MIL-STD-202 AND ALSO IN ACCORDANCE WITH THE ENDURANCE TEST OF PARAGRAPH 5.1.3.3.3 OF MIL-STD-167B (SHIPS). A DURATION OF 25 PERCENT AT +175° C AND 25 PERCENT AT -55° C SHALL BE IMPOSED DURING VIBRATION. ALL CONTACTS SHALL BE WIRED IN SERIES AND A CURRENT OF 100 ±10 MILLIAMPERES SHALL FLOW THROUGH

APPROVED DECEMBER 26 1972 REVISED © FOR CHANGES SEE SHEETS 1,2,3&4

User activities: Army, Navy, Air Force
Reviewer activities: Army AT, AV, ME, MI, MU; Navy EC; Air Force 11, 17, 80, 85

P.A. NAVY-AS; Other Cust ARMY-EL, AF-85	International interest:	TITLE © CONNECTORS, PLUG, ELECTRICAL, SELF-LOCKING, COUPLING NUT, REAR RELEASE, CRIMP CONTACT, AN TYPE	MILITARY STANDARD MS 3459
Procurement Specification MIL-C-5015		SUPERSEDES:	SHEET 3 OF 4

THE SERIES CIRCUIT DURING THE TEST. A SUITABLE INSTRUMENT SHALL BE EMPLOYED TO MONITOR CURRENT FLOW AND TO INDICATE DISCONTINUITY OF CONTACT OR INTERRUPTION OF CURRENT FLOW. THERE SHALL BE NO EVIDENCE OF DAMAGE OR LOOSENING OF PARTS DUE TO VIBRATION, NOR SHALL THERE BE ANY INTERRUPTION OF ELECTRICAL CONTINUITY LONGER THAN ONE MICROSECOND. IN ADDITION, THE CONNECTOR ASSEMBLY SHALL MEET THE COUPLING AND UNCOUPLING FORCES OF TABLE I.

F. SAND AND DUST. THE SAND AND DUST TEST SHALL BE PERFORMED ON THE FULLY MATED CONNECTOR PAIR IN ACCORDANCE WITH METHOD 110, CONDITION A OF MIL-STD-202, EXCEPT THAT THE EXPOSURE TIME FOR PART 1 AND PART 2 SHALL BE INCREASED TO 12 MINUTES EACH. AFTER EXPOSURE, THE DUST SHALL NOT BE REMOVED BEFORE EXPOSURE TO CORROSION. AFTER EXPOSURE TO THIS TEST, THE CONNECTOR PAIR SHALL MEET THE REQUIREMENTS OF SUBSEQUENT TESTING.

G. CORROSION. THE MATED CONNECTOR PAIR SHALL BE SUBJECTED TO A SALT SPRAY TEST IN ACCORDANCE WITH METHOD 101, CONDITION B OF MIL-STD-202. THE SALT CONCENTRATION SHALL BE FIVE PERCENT. THE CONNECTORS SHALL THEN BE DRIED IN A CIRCULATING AIR OVEN AT A TEMPERATURE OF 38° C ±3° C (100° F ±5° F) FOR A PERIOD OF NOT LESS THAN 12 HOURS, AFTER WHICH THEY SHALL BE REMOVED AND INSPECTED. THERE SHALL BE NO EXPOSURE OF BASIS METAL DUE TO CORROSION, WHICH WILL AFFECT PERFORMANCE. PRIOR TO ANY SUBSEQUENT TESTS, CORROSION TESTED CONNECTORS SHALL BE DISENGAGED AND ENGAGED FOR ONE CYCLE TO REMOVE FREE SALT DEPOSITS. IN ADDITION, THE CONNECTOR ASSEMBLY SHALL MEET THE COUPLING AND UNCOUPLING REQUIREMENTS OF TABLE I.

H. POST EXAMINATION OF PRODUCT.

2. QUALITY CONFORMANCE INSPECTION: IN ACCORDANCE WITH PROCUREMENT SPECIFICATION FOR GROUPS A AND B INSPECTION.

User activities: Army, Navy, Air Force

Reviewer activities: Army AT, AV, ME, MI, MU
Navy EC
Air Force 11, 17, 80, 85

APPROVED DECEMBER 26, 1972 REVISED © SEE SHEETS 1, 2, 3 & 4

This military standard is approved for use by all Departments and Agencies of the Department of Defense. Selection for all new engineering and design applications and for repetitive use shall be made from this document.

P.A NAVY-AS Other Cust ARMY-EL AF-85	International interest:	TITLE © CONNECTORS, PLUG, ELECTRICAL, SELF-LOCKING, COUPLING NUT, REAR RELEASE, CRIMP CONTACT, AN TYPE	MILITARY STANDARD MS 3459
Procurement Specification MIL-C-5015		SUPERSEDES:	SHEET 4 OF 4

DD FORM 1 SEP 63 672 (Coordinated) PREVIOUS EDITIONS OF THIS FORM ARE OBSOLETE.