Downloaded from http://www.everyspec.com

INCH-POUND

MS3440C
1 March 2007
SUPERSEDING
MS3440B
31 July 1978

DETAIL SPECIFICATION SHEET

CONNECTORS, RECEPTACLE, ELECTRICAL, NARROW FLANGE MOUNT, BAYONET COUPLING, SOLDER PIN CONTACT, CLASS H, SERIES 2

Inactive for new design after 15 December 1998.

This specification is approved for use by all Departments and Agencies of the Department of Defense.

The requirements for acquiring the product described herein shall consist of this specification sheet and MIL-DTL-26482.

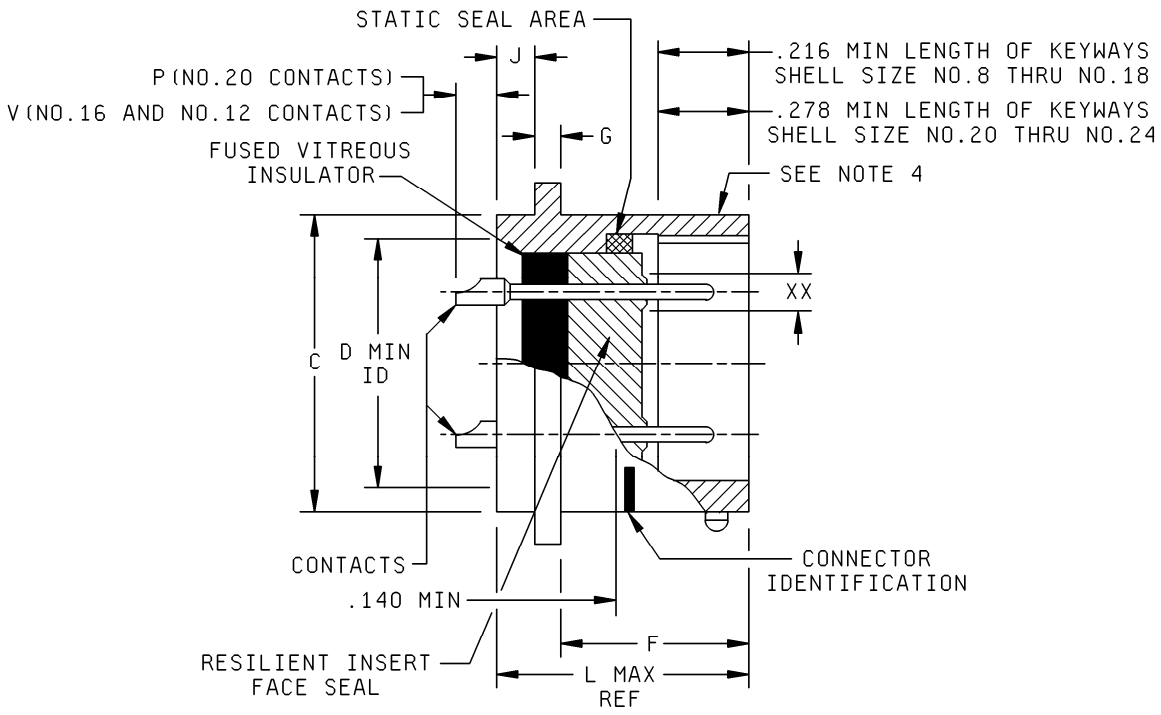

NOTE: For “XX”, see note 5 and table I for contact cavities requiring reduced dimensions.

FIGURE 1. Receptacle, class H, dimensions and configurations.

Downloaded from http://www.everyspec.com

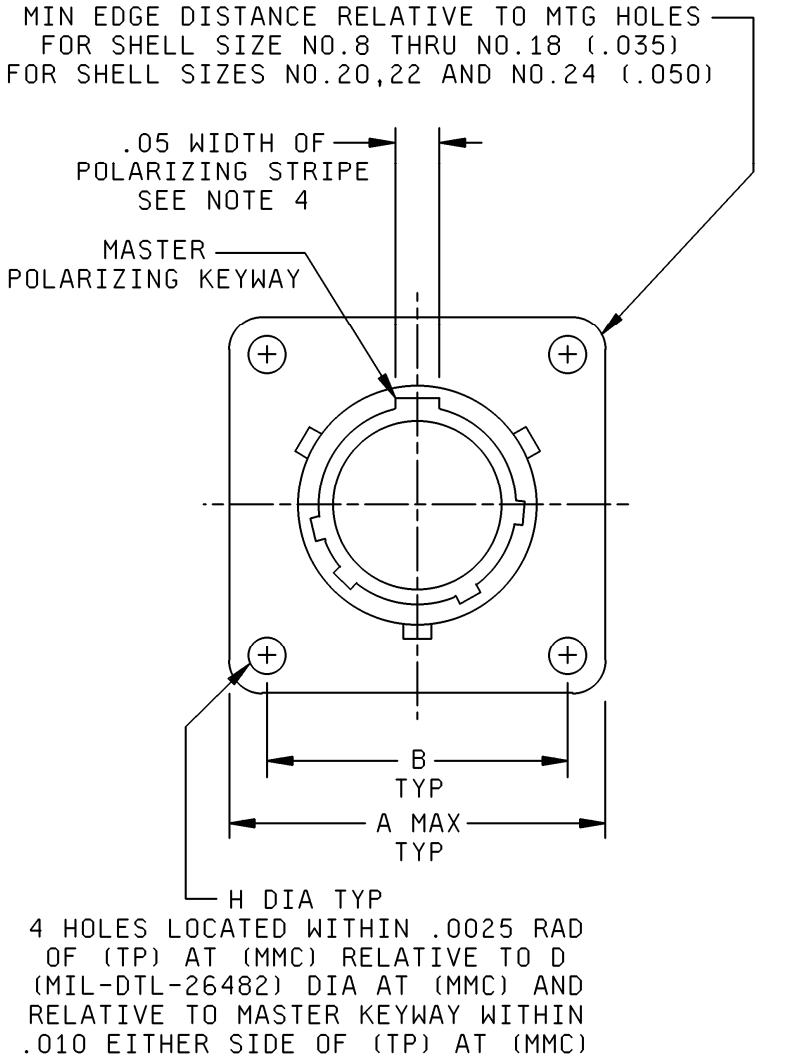

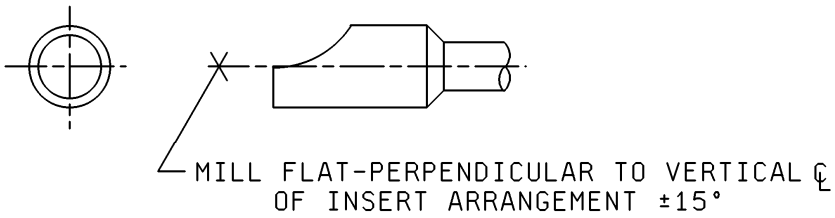

SOLDER POT ORIENTATION

FIGURE 1. Receptacle, class H, dimensions and configurations - Continued.

Downloaded from http://www.everyspec.com

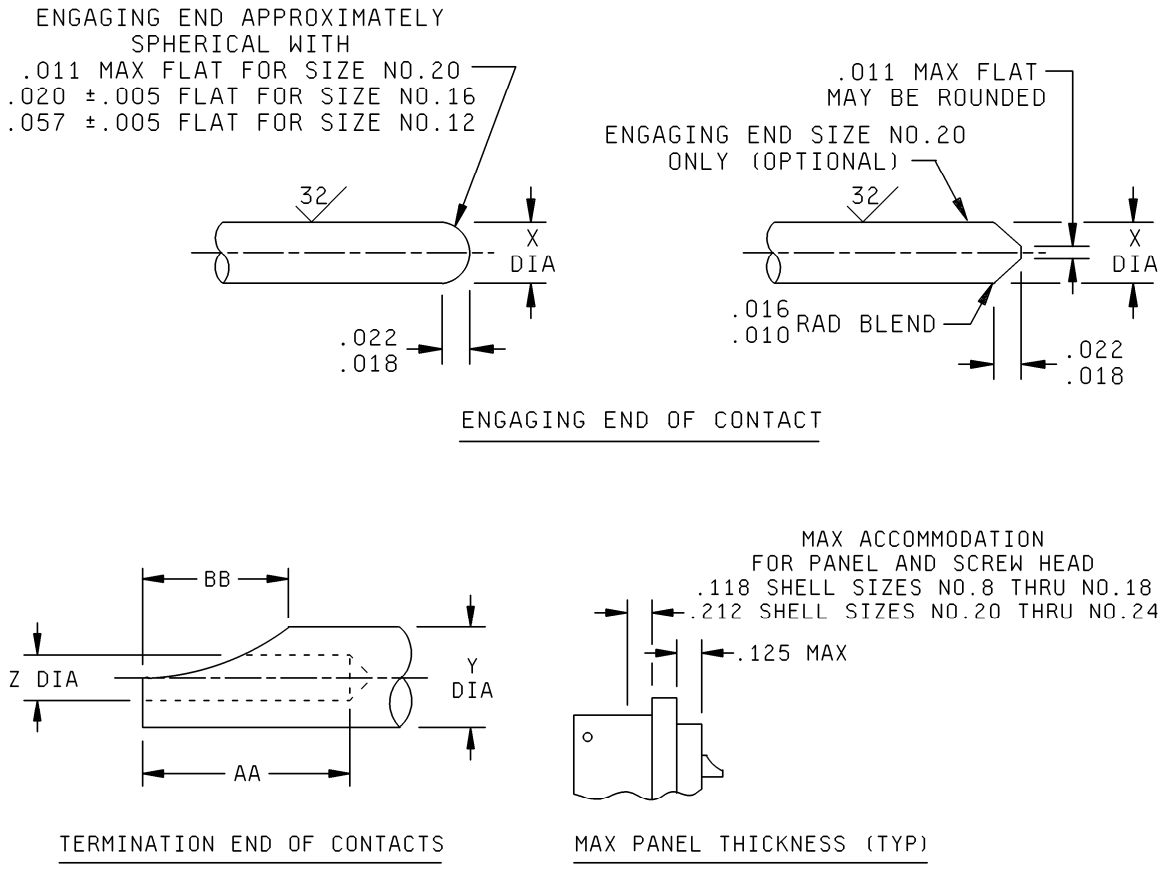

Contact size	X	Y	Z	AA	BB
20	.041 (1.04) .039 (0.99)	.088 (2.24) .061 (1.55)	.048 (1.22) .042 (1.07)	.188 (4.78) .109 (2.77)	.110 (2.79) .068 (1.73)
16	.0635 (1.61) .0615 (1.56)	.116 (2.95) .096 (2.44)	.075 (1.91) .069 (1.75)	.251 (6.38) .172 (4.37)	.141 (3.58) .109 (2.77)
12	.095 (2.41) .093 (2.36)	.150 (3.81) .130 (3.30)	.122 (3.10) .112 (2.84)	.251 (6.38) .172 (4.37)	.141 (3.58) .109 (2.77)

FIGURE 1. Receptacle, class H, dimensions and configurations - Continued.

Downloaded from http://www.everyspec.com

Shell size	A	B	C	D	F	G
8	.828 (21.03)	.594 (15.09)	.563 (14.30) .557 (14.15)	.403 (10.24)	.598 (15.19) .578 (14.68)	.078 (1.98) .046 (1.17)
10	.954 (24.23)	.719 (18.26)	.673 (17.09) .667 (16.94)	.515 (13.08)	.598 (15.19) .578 (14.68)	.078 (1.98) .046 (1.17)
12	1.047 (26.59)	.812 (20.62)	.782 (19.86) .776 (19.71)	.630 (16.00)	.598 (15.19) .578 (14.68)	.078 (1.98) .046 (1.17)
14	1.141 (28.98)	.906 (23.01)	.907 (23.04) .901 (22.89)	.755 (19.18)	.598 (15.19) .578 (14.68)	.078 (1.98) .046 (1.17)
16	1.234 (31.34)	.969 (24.61)	1.032 (26.21) 1.026 (26.06)	.880 (22.35)	.598 (15.19) .578 (14.68)	.078 (1.98) .046 (1.17)
18	1.328 (33.73)	1.062 (26.97)	1.157 (29.39) 1.151 (29.24)	.980 (24.89)	.598 (15.19) .578 (14.68)	.078 (1.98) .046 (1.17)
20	1.453 (36.91)	1.156 (29.36)	1.251 (31.78) 1.245 (31.62)	1.105 (28.07)	.660 (16.76) .640 (16.26)	.110 (2.79) .078 (1.98)
22	1.578 (40.08)	1.250 (31.75)	1.376 (34.95) 1.370 (34.80)	1.230 (31.24)	.660 (16.76) .640 (16.26)	.110 (2.79) .078 (1.98)
24	1.703 (43.26)	1.375 (34.93)	1.501 (38.13) 1.495 (37.97)	1.385 (35.18)	.660 (16.76) .640 (16.26)	.110 (2.79) .078 (1.98)

FIGURE 1. Receptacle, class H, dimensions and configurations - Continued.

Downloaded from http://www.everyspec.com

Shell size	H	J	L	P	V	Panel cutout dia	Max weight lbs (grams)
8	.120 (3.05)	.125 (3.18) .105 (2.67)	.801 (20.35)	.178 (4.52) .118 (3.00)	.248 (6.30) .188 (4.78)	.570 (14.48)	.038 (17.25)
10						.680 (17.27)	.044 (19.98)
12						.789 (20.04)	.052 (23.61)
14						.914 (23.22)	.070 (31.78)
16						1.039 (26.39)	.085 (38.59)
18						1.164 (29.57)	.098 (44.49)
20		.093 (2.36) .073 (1.85)	.863 (21.92)			1.258 (31.95)	.110 (49.94)
22		.125 (3.18) .105 (2.67)	.895 (22.73)	.146 (3.71) .086 (2.18)	.216 (5.49) .156 (3.96)	1.383 (35.13)	.150 (68.10)
24	.147 (3.73)			.146 (3.71) .086 (2.18)		1.508 (38.30)	.280 (127.12)

Inches	mm	Inches	mm
.0025	0.064	.044	1.12
.005	0.13	.050	1.27
.010	0.25	.057	1.45
.011	0.28	.06	1.5
.016	0.41	.070	1.78
.018	0.46	.118	3.00
.020	0.51	.140	3.56
.022	0.56	.212	5.38
.035	0.89	.216	5.49
		.278	7.06

NOTES:

1. Dimensions are in inches.
2. Metric equivalents are given for information only.
3. Dimensional tolerances are .XX ± .01, .XXX ± .005. Angular tolerances are X° ± 1°.
4. Polarizing stripes, color optional.
5. Insert arrangements requiring reduced diameters for raised seal barrier on outer row of contact cavities as indicated.
6. True position (TP) tolerances specified are in accordance with ASME Y14.5M.

FIGURE 1. Receptacle, class H, dimensions and configurations - Continued.

Downloaded from http://www.everyspec.com

TABLE I. Contact cavities requiring reduced diameters (XX) for pins and sockets in outer row of contact cavities. 1/

Shell size	Insert arrangement	Contact cavities
8	-33 and -98	A, B, C.
12	-10	C, G.
14	-12	A, B, C, D, E, F, G, H.
14	-18	A, C, E, G, J, L.
14	-19	B, D, F, H, K, M.
16	-26	A, B, C, D, E, F, G, H, J, K, L, M, N, P, R.
18	-32	A, B, C, D, E, F, G, H, J, K, L, M, N, P, R, S, T.
22	-41	A, B, C, D, E, F, G, H, J, K, L, M, N, P, R, S, T, U, V, W, X, Y.

1/ The reduced diameter "XX" refers to the diameters of the raised seal barriers (pin barrier rings) or lead-in chamfers (socket entry holes) to ensure proper sealing of pin and socket after mating. See MIL-DTL-26482, Connector intermateability control dimensions (series 1 and series 2) for reduced diameter "XX" for contact size 20 only.

REQUIREMENTS:

Dimensions and configurations: See figure 1 and table I.
Connector mating: This connector mates with MS3475 and MS3476.
For insert arrangement: See MIL-STD-1669.
Intermateability dimensions are in accordance with MIL-DTL-26482.

Material:
Shell types A and B, 300 series stainless steel in accordance with ASTM A582/A582M and ASTM A276. Shell type C, cold rolled steel in accordance with ASTM A108.

Finish:
Shell types A and B, passivated in accordance with ASTM A967.
Shell type C, .0001 inch (2.54 µm) tin minimum in accordance with ASTM B545 or ASTM B339 over nickel in accordance with SAE-AMS-QQ-N-290.

Downloaded from http://www.everyspec.com

Part or Identifying Number (PIN) example:

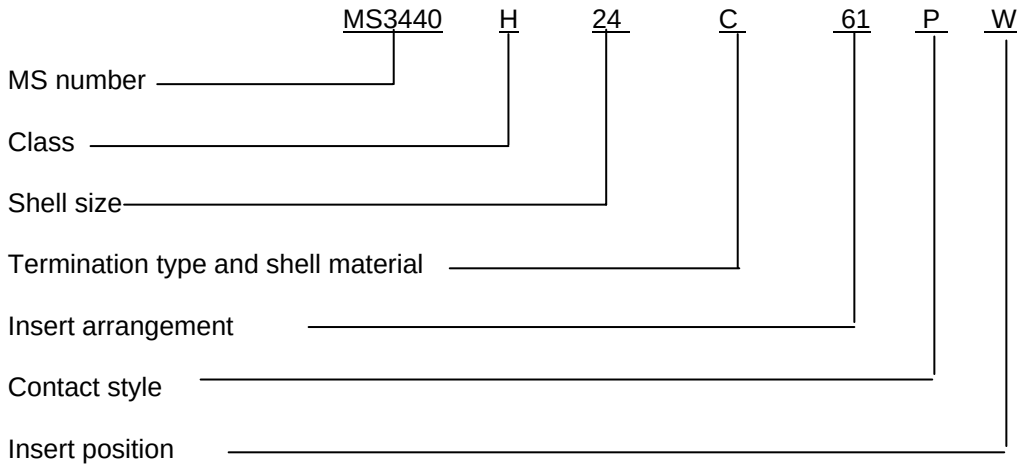

Changes from previous issue. Marginal notations are not used in this revision to identify changes with respect to the previous issue due to the extent of the changes.

Referenced documents. In addition to MIL-DTL-26482, this document references the following:

MS3475
MS3476
MIL-STD-1669
ASME Y14.5M
ASTM A108
ASTM A276
ASTM A582/A582M
ASTM A976
ASTM B339
ASTM B545
SAE-AMS-QQ-N-290

CONCLUDING MATERIAL

Custodians:
Army – CR
Navy – AS
Air Force – 11
DLA – CC

Preparing activity:
DLA – CC

(Project 5935-4656-008)

Review activities:
Army – AV
Navy – EC, SH
Air Force – 99

NOTE: The activities listed above were interested in this document as of the date of this document. Since organizations and responsibilities can change, you should verify the currency of the information above using the ASSIST Online database at http://assist.daps.dla.mil.