Downloaded from http://www.everyspec.com

USER SYMBOLS
NAVY-OS, EC
ARMY-EL

REVIEWER SYMBOLS
US AF - 11 82
ARMY - MI

"Review/user information is current as of the date of this document. For future coordination of changes to this document draft circulation should be based on the information in the current DODISS."

This military standard is approved for use by all Department & Agencies of the Department of Defense. Selection to all new engineering and design applications and for repair use shall be made from this document.

FED SUP CLASS
6645

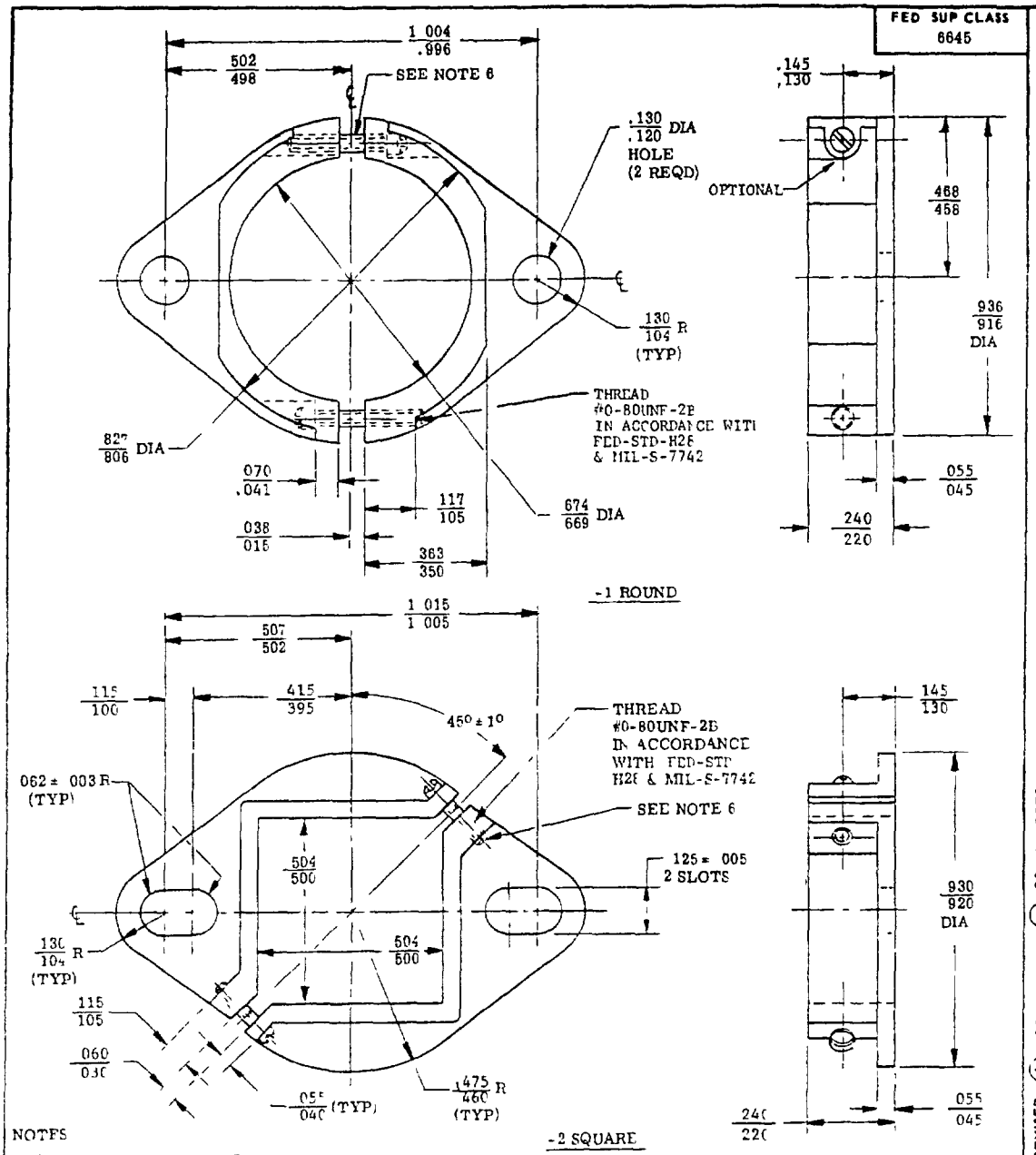

NOTES

1. DIMENSIONS IN INCHES
2. USE WITH MS17321 AND MS17322
3. MATERIAL DIE CASTING PER QQ-Z-363 ALLOY AG40A OR EQUIVALENT
4. FINISH DIE CASTING BLACK COLOR NO 37038 PER FED-STD-595
5. REMOVE ALL BURRS AND SHARP EDGES
6. #0-80 UNF-2A X 1/4 LG FILLISTER HEAD MACHINE SCREW STAINLESS STEEL
7. USERS OF THESE FLANGES ARE REQUESTED TO REPORT INSTANCES WHERE SPECIFIED QUALITY HAS NOT BEEN MAINTAINED TO COMMANDER, NAVAL AIR SYSTEMS COMMAND, WASHINGTON, D C 20360.
8. MARKING TO BE ON PACKAGE WHEN ORDERED AS A SEPARATE ITEM

FOR DESIGN FEATURES PURPOSES THIS STANDARD TAKES PRECEDENCE OVER PROCUREMENT DOCUMENTS REFERENCED HEREIN. REFERENCED DOCUMENTS SHALL BE OF THE ISSUE IN EFFECT ON DATE OF INVITATIONS FOR BID

(B) ENTIRE STANDARD REVISED.

APPROVED 27 MAR 69 REVISED (A) 27 APR 1970 (B) 29 DEC 1978

P A NAVY - AS Other Cust USAF - 11 ARMY - AR	TITLE FLANGE, SPLIT MOUNTING METER, TIME TOTALIZING	MILITARY STANDARD MS3345
PROCUREMENT SPECIFICATION MIL-M-7793	SUPERSEDES	SHEET 1 OF 1

DD FORM 1 SEP 67 672-1 (Coordinated) PREVIOUS EDITIONS OF THIS FORM ARE OBSOLETE PROJECT NO. 6645-0326 PLATE NO 15320