Downloaded from http://www.everyspec.com

USER SYMBOLS: ARMY - MI, AV

REVIEWER SYMBOLS: NAVY - AS; AIR FORCE - 11, 18, 70; ARMY - MU

"Review/user information is current as of the date of this document. For future coordination of changes to this document, draft standards should be based on the information in the current DODISS."

This military standard is approved by the Department of Defense and is mandatory for use by all Departments & Agencies of the Department of Defense. Selection for all new engineering and design applications and for repetitive use shall be made from this document.

FED. SUP CLASS 1325

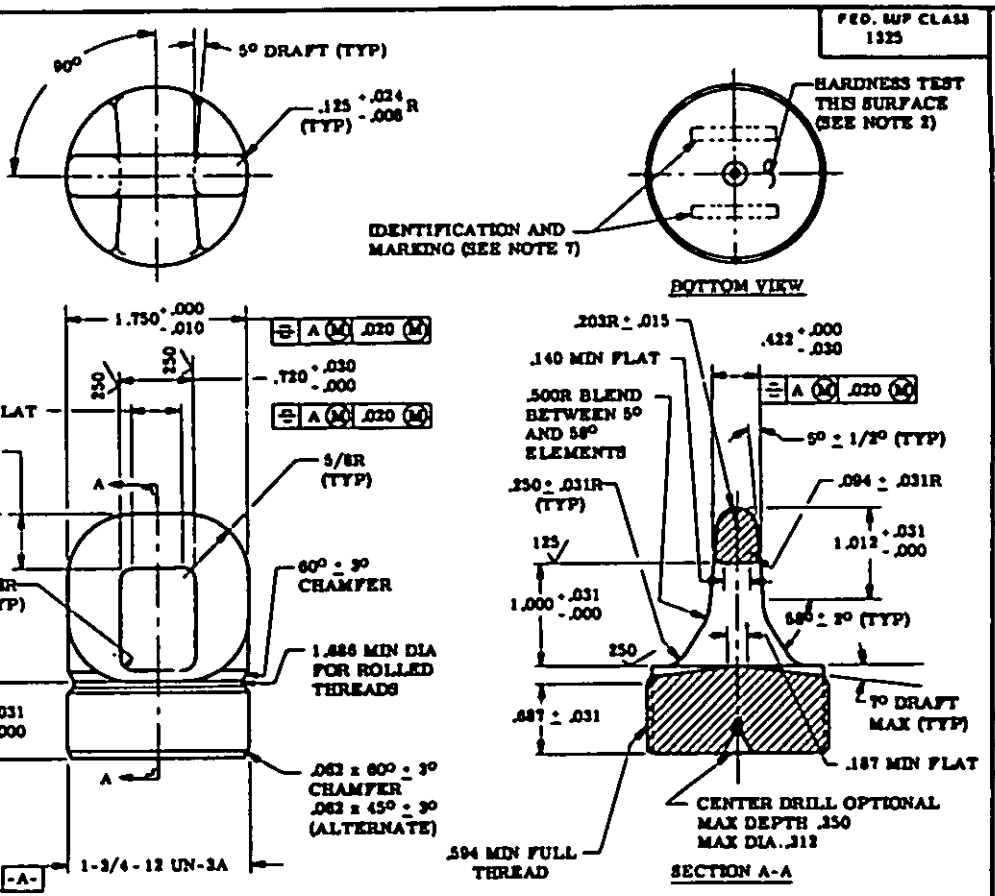

NOTES:
1. MATERIAL: 4340 STEEL, IN ACCORDANCE WITH MIL-S-5000.
2. HEAT TREATMENT: HEAT TREAT IN ACCORDANCE WITH MIL-H-6875 TO RH C38-C44.
3. PROTECTIVE FINISH: CADMIUM PLATE, QQ-P-416, TYPE II, CLASS 2 OR ZINC PLATE, QQ-Z-325, TYPE II, CLASS 2. EMBRITTLE RELIEVE FOR 6 HOURS AT 375° ± 25°F AFTER PLATING.
4. SURFACE ROUGHNESS: UNLESS OTHERWISE SPECIFIED, FINISH FOR ALL MACHINED SURFACES SHALL BE A MAXIMUM OF 125. FINISH FOR ALL FORGED SURFACES SHALL BE A MAXIMUM OF 250. SURFACE ROUGHNESS READING SHALL BE MADE IN ACCORDANCE WITH ASA B 46.1 AFTER THE SUSPENSION LUG HAS BEEN PLATED.
5. REMOVE ALL BURRS AND BREAK ALL SHARP EDGES .062 R MAX. ALL INSIDE CORNER RADII SHALL BE .062 R MAX.
6. DIMENSIONS IN INCHES. UNLESS OTHERWISE SPECIFIED, TOLERANCE: DECIMALS ± .010, FRACTIONS ± 1/64, ANGLES ± 1°. ALL DIMENSIONS AND TOLERANCES APPLY AFTER PLATING.
7. IDENTIFICATION MARKING SHALL BE IN ACCORDANCE WITH MIL-STD-130 AND SHALL INCLUDE THE MS PART NO, THE WORDS "LUG, SUSPENSION," MANUFACTURER'S CODE NUMBER AND DATE OF MANUFACTURE IN 1/16 INCH CHARACTERS, STEEL STAMPED.

*CERTAIN PROVISIONS OF THIS STANDARD ARE THE SUBJECT OF INTERNATIONAL STANDARDIZATION AGREEMENT ASCC AIR STD 20/3. WHEN REVISION OR CANCELLATION OF THIS STANDARD IS PROPOSED WHICH WILL AFFECT OR VIOLATE THE INTERNATIONAL AGREEMENT CONCERNED, THE PREPARING ACTIVITY WILL TAKE APPROPRIATE RECONCILIATION ACTION THROUGH INTERNATIONAL STANDARDIZATION CHANNELS, INCLUDING DEPARTMENTAL STANDARDIZATION OFFICES, IF REQUIRED.

FOR DESIGN FEATURE PURPOSES, THIS STANDARD TAKES PRECEDENCE OVER PROCUREMENT DOCUMENTS REFERENCED HEREIN.
REFERENCED DOCUMENTS SHALL BE OF THE ISSUE IN EFFECT ON DATE OF INVITATIONS FOR BID.

APPROVED 26 Sep 67 REVISED

P.A. NAVY - AS Other Cust ARMY - MU AF - 18	TITLE LUG, SUSPENSION, (1000 LB CLASS) AIRBORNE EQUIPMENT	MILITARY STANDARD MS3314
PROCUREMENT SPECIFICATION MIL-L-81550	SUPERSEDES BUORD 1252628, USAF 57C25092, 62D11076 USAF 64D11465, ORD (ARMY) 8429512, 8729781	SHEET 1 OF 1

DD FORM 672-1 (Coordinated)

PLATE NO. 15220