INCH-POUND

MS3217C
25 October 2011
SUPERSEDING
MS3217B
14 JULY 1989

DETAIL SPECIFICATION SHEET

RING, RETAINING, EXTERNAL, HEAVY-DUTY (TAPERED SECTION TYPE)

This specification is approved for use by all Departments and Agencies of the Department of Defense.

The requirements for acquiring the product described herein shall consist of this specification sheet and procurement specification MIL-R-21248.

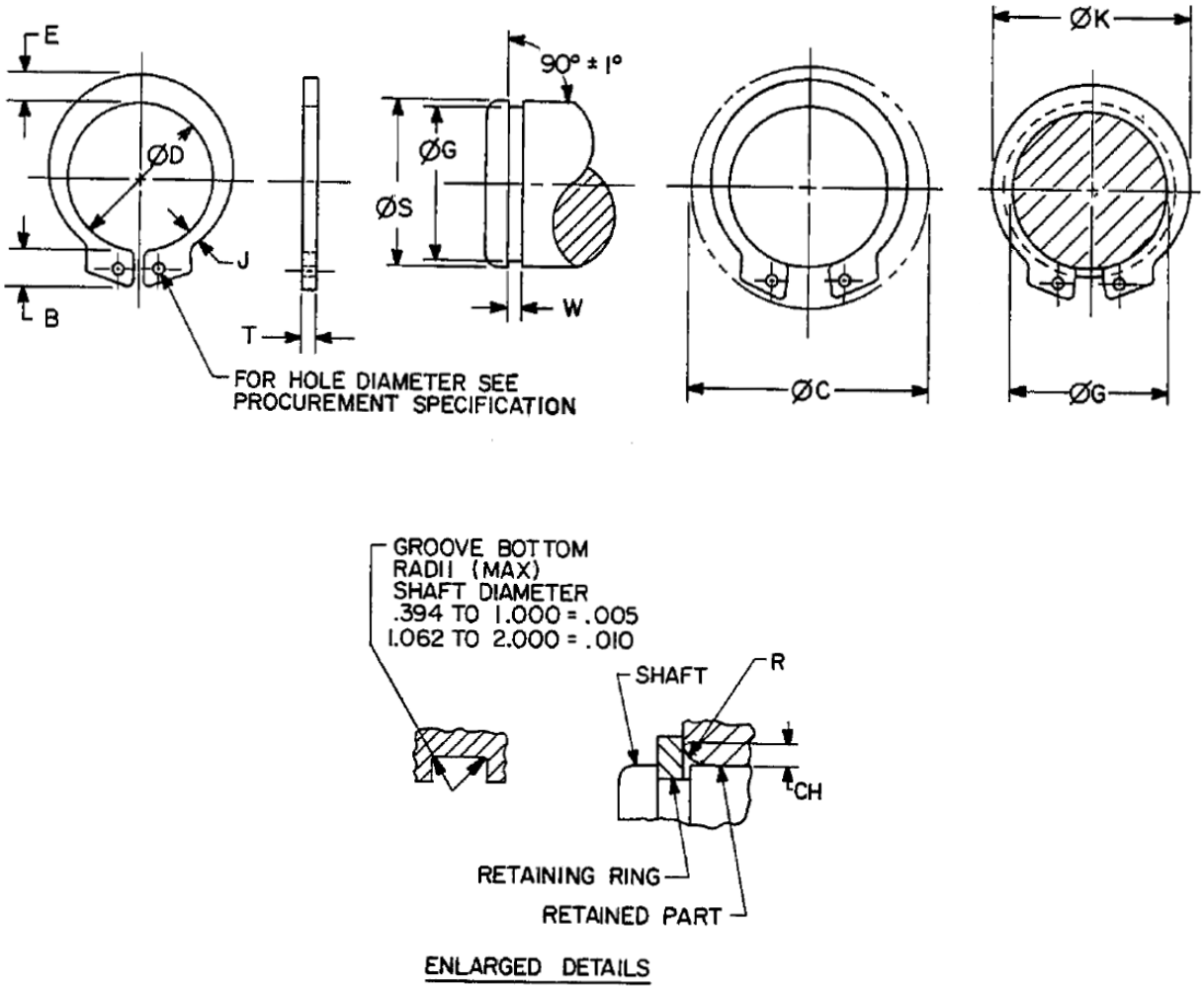

FIGURE 1. Ring, Retaining.

TABLE I. Dimensions.

ØS SHAFT (REF)		ØD FREE		B LUG HEIGHT		E LARGE SECTION HEIGHT		J SMALL SECTION HEIGHT		T 1/ THICKNESS	
INCH	MM	BASIC	TOL	BASIC	TOL	BASIC	TOL	BASIC	TOL	BASIC	TOL
.394	10.0	.362	+.003 -.008	.101		.068	±.004	.039	±.004	.035	
.473	12.0	.435		.101		.088		.053		.042	
.500	12.7	.460		.120	±.004	.090		.050		.050	±.002
.591	15.0	.543		.130		.102	±.005	.057	±.005	.050	
.625	15.9	.575		.130		.106		.059		.050	
.669	17.0	.616		.130		.112		.062		.050	
.750	19.0	.689		.180		.127		.077		.078	
.787	20.0	.689	+.005 -.010	.180		.127		.077		.078	
.875	22.2	.804		.180		.148	±.006	.083	±.006	.078	
.984	25.0	.906		.180		.151		.084		.078	
1.000	25.4	.906		.180		.151		.084		.078	
1.062	27.0	.978		.220		.161		.090		.093	
1.125	28.6	1.036		.220		.169		.095		.093	
1.181	30.0	1.087		.220		.176		.098		.093	
1.188	30.2	1.087		.220	±.005	.176		.098		.093	
			+.010 -.015				±.007		±.007		±.003
1.250	31.7	1.150		.220		.185		.103		.093	
1.312	33.3	1.208		.220		.192		.106		.093	
1.375	34.9	1.268		.220		.200		.110		.093	
1.378	35.0	1.268		.220		.200		.110		.093	
1.500	38.1	1.380		.280		.218		.123		.109	
1.562	39.7	1.437		.280		.228		.127		.109	
1.575	40.0	1.437		.280		.228		.127		.109	
1.750	44.4	1.608	+.013 -.020	.290		.254	±.008	.140	±.008	.109	
1.772	45.0	1.608		.290		.254		.140		.109	
1.938	49.2	1.782		.314	±.006	.280		.154		.125	±.004
1.969	50.0	1.782		.314		.280		.154		.125	
2.000	50.8	1.840		.314		.290		.160		.125	

TABLE I. Dimension. (Continued)

ØS SHAFT (REF)		ØG RECOMMENDED GROOVE (REF)		W WIDTH RECOMMENDED GROOVE (REF)		ØK 3/	ØC 4/ CLEAR	R 5/ OF RETAINED PART (REF)	CH 5/ OF RETAINED PART (REF)
INCH	MM	BASIC	TOL	BASIC	TOL	MAX		MAX	MAX
.394	10.0	.368	+.001 -.002	.040	+.003 -.000	.479	.61	.047	.039
.473	12.0	.444	.002	.047		.589	.69	.070	.058
.500	12.7	.468	FIM 2/	.056	+.004 -.000	.613	.75	.070	.058
.591	15.0	.555		.056		.719	.86	.070	.058
.625	15.9	.588		.056		.758	.90	.074	.062
.669	17.0	.629	+.001 -.003	.056		.808	.94	.077	.064
.750	19.0	.704		.086		.913	1.12	.089	.074
.787	20.0	.740	.002	.086		.949	1.16	.089	.074
.875	22.2	.821		.086		1.056	1.25	.100	.083
.984	25.0	.925	FIM 2/	.086		1.164	1.36	.100	.083
1.000	25.4	.938		.086		1.177	1.37	.100	.083
1.062	27.0	.998		.103		1.256	1.52	.106	.088
1.125	28.6	1.059		.103		1.329	1.58	.112	.093
1.181	30.0	1.111	+.002 -.004	.103		1.391	1.64	.112	.093
1.188	30.2	1.111	.004	.103	+.005 -.000	1.391	1.64	.112	.093
1.250	31.7	1.174		.103		1.468	1.70	.112	.093
1.312	33.3	1. 234	FIM 2/	.103		1.538	1.77	.128	.107
1.375	34.9	1.291		.103		1.607	1.83	.128	.107
1.378	35.0	1.291		.103		1.607	1.83	.128	.107
1.500	38.1	1.406		.120		1.752	2.08	.128	.107
1.562	39.7	1.468	+.003 -.004	.120		1.829	2.14	.128	.107
1.575	40.0	1.480		.120		1.841	2.15	.128	.107
1.750	44.4	1.650	.004	.120		2.050	2.34	.128	.107
1.772	45.0	1.669		.120		1.069	2.37	.128	.107
1.938	49.2	1.826	FIM 2/	.139	+.006 -.000	2.265	2.58	.153	.128
1.969	50.0	1.850		.139		2.289	2.61	.153	.128
2.000	50.8	1.880		.139		2.334	2.64	.153	.128

1/ T = Thickness "T" applies to unplated rings. For corrosion resistant steel and plated rings, +.002 should be added to the maximum tolerance, i.e., ±.002 should be +.004/-.002.
2/ FIM = (Full Indicator Movement) is the maximum allowable deviation of concentricity between the groove and the shaft.
3/ K = Maximum diameter when the ring is properly seated in the groove (design reference dimension).
4/ C = Actual clearance diameter when the ring is sprung over the shaft prior to installation into the groove (design reference dimension).
5/ R and CH = Radii or chamfers allowable on parts to be retained by the rings. Thrust loads of rings, retaining parts with corner radii or chamfers (see note "3 (g)" on page 7).

Requirements:

1. Classification: Retaining rings furnished under this standard shall be Type I, Class 10 of the procurement specification, MIL-R-21248.

2. Material:

(a) Carbon steel, grade 1060 thru 1095 (UNS G10600 thru G10950) in accordance with ASTM A568/A568M or ASTM A684/A684M.
(b) Corrosion resistant steel in accordance with SAE-AMS 5520 (UNS S15700).
(c) Beryllium copper alloy number 170 (UNS C17000) or alloy number 172(UNS C17200) in accordance with ASTM B194.

3. Hardness:

TABLE II. Hardness.

Ø SHAFT (REF)	CARBON STEEL	CORROSION RESISTANT STEEL	BERYLLIUM COPPER
.394 to .625	67.5 – 75 HR30N	63 – 69.5 HR30N	54 - 62 HR30N
.669 to 2.000 incl.	47 - 52 HRC	44 - 51 HRC	34 - 43 HRC

4. Protective finish or surface treatment:

   (a) Carbon steel – shall be as specified (see Table III):
      (1) Cadmium plate in accordance with SAE-AMS-QQ-P-416, Type II, Class 3 or ASTM B696, Type II, Class 5.
      (2) Zinc coat in accordance with ASTM B633, Type II, Class Fe/Zn5, or ASTM B695, Type II, Class 5.
      (3) Phosphate coating accordance with MIL-DTL-16232, Type Z, Class 2.

   (b) Corrosion resistant steel – shall be cleaned, descaled and passivated in accordance with SAE-AMS2700.

5. Part number: The basic MS part number is followed by a dash number taken from Table III.

   Example: MS3217-1200 is the part number for a carbon steel, cadmium plate, external, heavy duty retaining ring for use on a 2.000 diameter shaft.

TABLE III. Dash numbers for MS3217

ØS SHAFT (REF)	CARBON STEEL 1/ CADMIUM PLATE	CARBON STEEL 1/ ZINC COAT	CARBON STEEL 1/ PHOSPHATE COAT	STEEL, CORROSION RESISTANT	BERYLLIUM 1/ COPPER
	DASH NO.	DASH NO.	DASH NO.	DASH NO.	DASH NO.
.394	-1039	-2039	-3039	-4039	-5039
.473	-1047	-2047	-3047	-4047	-5047
.500	-1050	-2050	-3050	-4050	-5050
.591	-1059	-2059	-3059	-4059	-5059
.625	-1062	-2062	-3062	-4062	-5062
.669	-1066	-2066	-3066	-4066	-5066
.750	-1075 2/	-2075 2/	-3075 2/	-4075 2/	-5075 2/
.787	-1075 2/	-2075 2/	-3075 2/	-4075 2/	-5075 2/
.875	-1087	-2087	-3087	-4087	-5087
.984	-1098 2/	-2098 2/	-3098 2/	-4098 2/	-5098 2/
1.000	-1098 2/	-2098 2/	-3098 2/	-4098 2/	-5098 2/
1.062	-1106	-2106	-3106	-4106	-5106
1.125	-1112	-2112	-3112	-4112	-5112
1.181	-1118 2/	-2118 2/	-3118 2/	-4118 2/	-5118 2/
1.188	-1118 2/	-2118 2/	-3118 2/	-4118 2/	-5118 2/
1.250	-1125	-2125	-3125	-4125	-5125
1.312	-1131	-2131	-3131	-4131	-5131
1.375	-1137 2/	-2137 2/	-3137 2/	-4137 2/	-5137 2/
1.378	-1137 2/	-2137 2/	-3137 2/	-4137 2/	-5137 2/
1.500	-1150	-2150	-3150	-4150	-5150
1.562	-1156 2/	-2156 2/	-3156 2/	-4156 2/	-5156 2/
1.575	-1156 2/	-2156 2/	-3156 2/	-4156 2/	-5156 2/
1.750	-1175 2/	-2175 2/	-3175 2/	-4175 2/	-5175 2/
1.772	-1175 2/	-2175 2/	-3175 2/	-4175 2/	-5175 2/
1.938	-1193 2/	-2193 2/	-3193 2/	-4193 2/	-5193 2/
1968	-1193 2/	-2193 2/	-3193 2/	-4193 2/	-5193 2/
2.000	-1200	-2200	-3200	-4200	-5200

1/ Substitute corrosion resistant steel when used in food processing machinery, or in fuel or lubrication systems, or when used at temperatures over 450°F (233°C)

2/ Same dash numbers suitable for either shaft diameter (inches or mm)

Notes:

1. Unless otherwise specified, all dimensions in inches.

2. In the event of a conflict between the text of this standard and the references cited herein, the text of this standard shall take precedence.

3. Recommended design limitations and usage:

   (a) Intended use – To provide large shoulders for positioning and retaining machine components under heavy loading conditions on shafts, even if components to be secured have large corner radii or chamfers abutting the rings. They withstand comparatively heavy shock loads and high rotational speeds. They eliminate the need for separate thrustwashers. The use of the following formulas are based on the fact that the ring will not fail in compression.

   Limitation on use – the following formulas are not to be used for brittle materials such as cast iron, etc.

   Warning – Rings shall not be over expanded during installation since this will lead to ring failure. If ring has play between the groove diameter and the inside ring diameter, this indicates that the ring has been over expanded, (providing groove has been machined to recommended dimensions).

   For approximate safety RPM limits see Table IV.

TABLE IV. Calculated RPM limits. Apply required safety factor.

Ø SHAFT (INCHES)		.394	.437	.500	.750	1.000	1.250	1.500	1.750	2.000
CARBON STEEL AND CORROSION RESISTANT STEEL	RPM LIMIT	80,000	69,000	65,000	40,000	30,000	23,000	18,500	15,500	14,000
BERYLLIUM COPPER	RPM LIMIT	51,000	44,000	41,000	26,000	19,000	14,500	12,000	10,000	9,000

(b) Allowable thrust load capacity of the ring. Abutting components to have sharp corners =

$$P = \frac{C_f \pi S T X}{F}$$

Where:
P = Allowable thrust load (Pounds)
S = Shaft diameter (Inches)
T = Ring thickness (Inches)
X = Ultimate shear strength of the ring material (PSI) 1/
F = Factor of safety, F = 4 is recommended to insure a safe working load

C_f = Conversion factor, C_F = 1.3 is required since thicker rings increase safety of assembly

(c) Allowable load capacity of groove wall =

$$P = \frac{C_f \pi S d Y}{F}$$

Where:
P = Allowable compression load (Pounds)
S = Shaft diameter (Inches)
d = Groove depth (Inches)
Y = Yield strength in compression of the groove material (PSI)
F = Factor of safety, F = 2 is recommended to insure a safe working load

C_f = Conversion factor, C_F = 2 is required since contact area in groove is increased due to thicker ring

(d) Minimum distance between outer groove wall and end of shaft =

$$Z = 3d$$

Where:
Z = Minimum distance between outer groove and end of shaft (Inches)
d = Groove depth (Inches)

(e) Allowable shaft diameter =

$$S = \sqrt{G^2 + \frac{4FP}{Y\pi C_f}}$$

Where:
S = Allowable shaft diameter
G = Groove depth
F = Factor of safety (see formula (c) above)
P = Design load
Y = Yield strength in compression of the groove material (PSI)
C_f = Conversion factor (see formula (c) above)

(f) Differential rotation =

The condition under which a retaining ring may be used when adjacent parts rotate relative to it, fall into two categories:

(1) Where no thrust is exerted by adjacent part. In this case, differential rotation of ring and adjacent part creates no element of risk in the application of the rings because no frictional torque is exerted by the machine part on the ring.

(2) Consideration must be given to the magnitude of the thrust involved. The friction moment may not exceed the bending moment, which the ring can tolerate without releasing its pressure against the bottom of the groove, formulated as follows:

$$fPN \leq \frac{sTE^2}{18} \quad \text{or}$$

$$P \leq \frac{sTE^2}{F18N}$$

Where:
P = Allowable thrust load exerted by adjacent part (Pounds)
f = Coefficient of friction
s = Working stress of ring under maximum expansion (PSI) 2/
T = Ring thickness (Inches)
E = Greatest width section of ring (Inches)
N = Neutral ring diameter (Inches) = free diameter plus 3/4 E dimension

In such cases where differential rotation occurs, the calculation should be based on the MAXIMUM possible value of the coefficient of friction.

(g) Impact capacity of ring and groove wall =

$I_R = \frac{PT}{2}$ - For the ring (Inch Pounds) Abutting components to have sharp corners

$I_G = \frac{Pd}{2}$ - For the groove (Inch Pounds)

Where:

P =. Allowable thrust load of rings or grooves (Pounds)
T = Ring thickness (Inches)
I_R = Impact capacity of ring (Inch Pounds)
I_G = Impact capacity of groove wall (Inch Pounds)
d = Groove depth (Inches)

1/ X = 150,000 PSI ultimate shear strength for rings of carbon steel or corrosion resistant steel.
X = 110,000 PSI ultimate shear strength for rings of beryllium copper.
2/ s = 250,000 PSI working stress for rings of carbon steel or corrosion resistant steel.
s = 180,000 PSI working stress for rings of beryllium copper.

(h) Load capacity with the retained part radiused or chamfered = when the radius or chamfer of the retained part does not exceed the maximum radius allowed for the bottom of the ring groove, the lesser load capacity computed from the formals on pages 5 and 7 will apply. The corner radii and chamfers listed on page 1 were chosen as large as possible for the ring sizes involved and are related to the maximum thrust loads listed in the table below. If the corner radii or chamfers are smaller than those listed, then the thrust loads increase proportionally, in accordance with the following formulas:

$P^1 = \frac{P\,R}{R^1}$

$P^1 = \frac{P\,Ch}{Ch^1}$

Where:

P^1 = New allowable thrust load
P = Listed allowable thrust load
R^1 = New (smaller) corner radius
R = Listed corner radius
Ch^1 = New (smaller) chamfer
Ch = Listed chamfers

Limit loads listed in Table V are based on rings of carbon steel or corrosion resistant steel (working stress 250,000 PSI) and of rings of beryllium copper (working stress = 180,000 PSI) if the allowable groove capacity loads as calculated by using the formula on page 5 are less, then they should be used.

Table V. Limit loads

ØS Shaft (Ref)		Allowable thrust load for ring assemblies with parts having maximum corner radii or chamfers	
From	To	Carbon steel or CRES	Beryllium copper
----	.394	450 LB	300 LB
----	.473	550 LB	400 LB
----	.500	650 LB	450 LB
.591	.625	750 LB	550 LB
----	.669	900 LB	650 LB
.750	1.000	2500 LB	1800 LB
1.062	1.378	4000 LB	2900 LB
1.500	1.772	5000 LB	3600 LB
1.938	2.000	6000 LB	4300 LB

4. Changes from previous issue. Marginal notations are not used in this revision to identify changes with respect to the previous issue due to the extent of the changes.

MILITARY INTEREST

Custodians:
Army - AR
Navy - OS
Air Force - 99

Preparing activity:
DLA - IS

(Project 5325-2011-004)

NOTE: The activities listed above were interested in this document as of the date of this document. Since organizations and responsibilities can change, you should verify the currency of the information above using the ASSIST Online database at https://assist.daps.dla.mil