INCH-POUND

MS3186E
9 July 2004
SUPERSEDING
MS3186D
6 April 1984

DETAIL SPECIFICATION SHEET

CONNECTOR, MOUNTING TO CONNECTORS, MOUNTING NUTS, PLAIN HEXAGON

This specification is approved for use by all Departments and Agencies of the Department of Defense.

The requirements for acquiring the product described herein shall consist of this specification sheet.

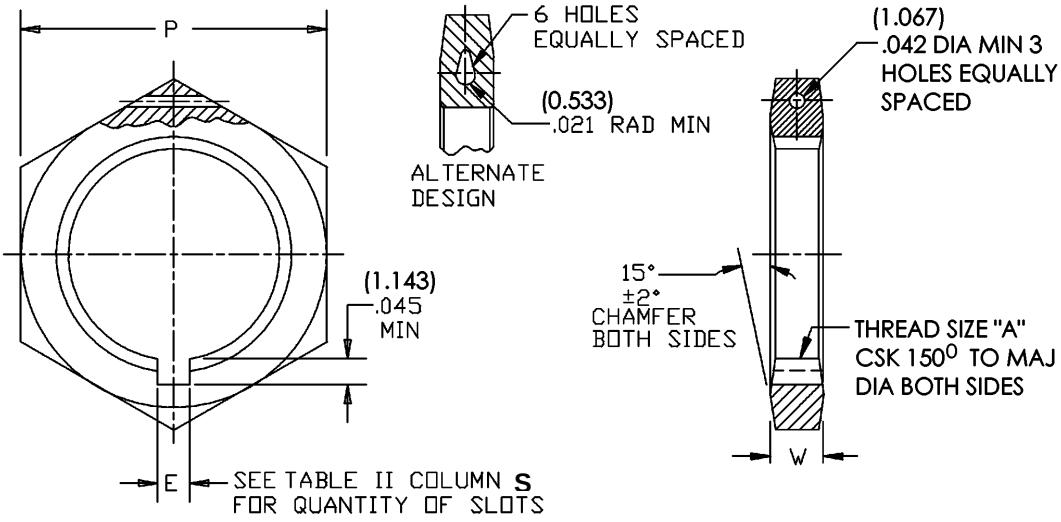

NOTES:
1. Dimensions are in inches.
2. Metric equivalents are in parenthesis and given for information only.
3. Unless otherwise specified, tolerance shall be 0.XX ± .03 (.762 mm) and 0.XXX ± .015 (.381 mm).
4. Angular tolerances shall be X° ± 2°.

FIGURE 1. Dimensions and configurations.

REQUIREMENTS:

Design and construction: See figure 1 and tables I and II.

The material and finish shall meet the requirements of the connector for which the mounting nut is being used.

Materials:
- A: Heat treatable wrought aluminum (for use on aluminum shell connectors).
- S: Steel, cold rolled, commercial quality (for use on steel shell connectors). (Bright cadmium plated aluminum nut may be used in lieu of steel nuts) in accordance with SAE-AMS-QQ-P-416.
- C: CRES in accordance with ASTM A484 and ASTM A582 (for use on CRES shell connectors).

Finish:
- A: Anodic coating, color black, in accordance with MIL-A-8625.
- B: Cadmium over corrosion resistant steel, color black, in accordance with SAE-AMS-QQ-P-416.
- N: Electroless nickel in accordance with SAE-AMS-C-26074 (Space use only).
- P: Passivate.
- W: Cadmium over nickel, color olive drab, in accordance with SAE-AMS-QQ-P-416.

Threads shall be in accordance with MIL-S-7742.

Remove all burrs and sharp edges.

Safety wire holes shall be capable of withstanding a 30-pound pull in any direction when using the .020 minimum diameter wire specified in NASM33540. Two pulls should be made, one parallel with axis of the nut and one perpendicular to axis of the nut.

Slot, shall be 120° apart, orientation optional with respect to hexagon configuration. Slot dimensions shall provide sufficient clearance for mounting on applicable jam-nut connector.

Part or Identifying Number (PIN) (example):

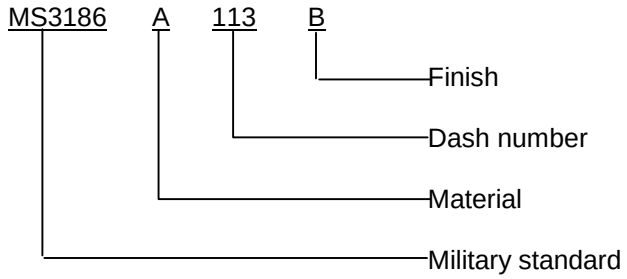

TABLE I. Connector intermateablility.

Dash number	Material	For connector shell size (reference)			
		MIL-DTL-5015	MIL-C-26482	MIL-DTL-26500	MIL-DTL-83723 Series I
101	A	85	---	---	---
	S	35	---	---	---
	C	85	---	---	---
102	A	---	8	---	8
	S	---	8	---	8
	C	---	8	---	8
103	A	10S-10SL	---	---	---
	S	10S-10SL	---	---	---
	C	10S-10SL	---	---	---
104	A	---	---	8	---
	S	---	---	8	---
	C	---	---	8	---
105	A	---	---	---	---
	S	---	---	---	---
	C	---	---	---	---
106	A	---	10	---	10
	S	---	10	---	10
	C	---	10	---	10
107	A	12S-12	---	10	---
	S	12S-12	---	10	---
	C	12S-12	---	10	---
108	A	---	---	---	---
	S	---	---	---	---
	C	---	---	---	---
109	A	14S-14	12	---	12
	S	14S-14	12	---	12
	C	14S-14	12	---	12
110	A	---	---	12	---
	S	---	---	12	---
	C	---	---	12	---
111	A	16S-16	14	14	14
	S	16S-16	14	14	14
	C	16S-16	14	14	14
112	A	---	---	16	---
	S	---	---	16	---
	C	---	---	16	---
113	A	18	16	---	16
	S	18	16	---	16
	C	18	16	---	16
114	A	---	---	---	---
	S	---	---	---	---
	C	---	---	---	---
115	A	---	---	18	---
	S	---	---	18	---
	C	---	---	18	---

TABLE I. Connector intermateablility - Continued.

Dash number	Material	For connector shell size (reference)				
		MIL-DTL-83723 Series III	MIL-DTL-38999 Series I	MIL-DTL-38999 Series II	MIL-C-28840	MIL-C-27599
101	A	---	---	---	---	---
	S	---	---	---	---	---
	C	---	---	---	---	---
102	A	---	---	---	---	---
	S	---	---	---	---	---
	C	---	---	---	---	---
103	A	---	---	---	---	---
	S	---	---	---	---	---
	C	---	---	---	---	---
104	A	---	---	---	---	---
	S	---	---	---	---	---
	C	---	---	---	---	---
105	A	8	---	---	---	---
	S	8	---	---	---	---
	C	8	---	---	---	---
106	A	---	9	---	---	9
	S	---	9	---	---	9
	C	---	9	---	---	9
107	A	10	---	---	---	---
	S	10	---	---	---	---
	C	10	---	---	---	---
108	A	---	11	---	---	11
	S	---	11	---	---	11
	C	---	11	---	---	11
109	A	---	---	8	11	8
	S	---	---	8	11	8
	C	---	---	8	11	8
110	A	12	---	---	---	---
	S	12	---	---	---	---
	C	12	---	---	---	---
111	A	14	13	10	13	10 -13
	S	14	13	10	13	10 -13
	C	14	13	10	13	10 -13
112	A	16 1/	---	---	---	---
	S	16 1/	---	---	---	---
	C	16 1/	---	---	---	---
113	A	16 2/	---	---	---	---
	S	16 2/	---	---	---	---
	C	16 2/	---	---	---	---
114	A	---	---	---	15	---
	S	---	---	---	15	---
	C	---	---	---	15	---
115	A	---	---	---	---	14 - 17
	S	---	---	---	---	14 - 17
	C	---	---	---	---	14 - 17

See footnotes at end of table.

TABLE I. Connector intermateablility - Continued.

Dash number	Material	For connector shell size (reference)			
		MIL-DTL-5015	MIL-C-26482	MIL-DTL-26500	MIL-DTL-83723 Series I
116	A	20	18	---	18
	S	20	18	---	18
	C	20	18	---	18
117	A	22	20	20	20
	S	22	20	20	20
	C	22	20	20	20
118	A	---	---	---	---
	S	---	---	---	---
	C	---	---	---	---
119	A	---	---	22	---
	S	---	---	22	---
	C	---	---	22	---
120	A	24	22	---	22
	S	24	22	---	22
	C	24	22	---	22
121	A	---	24	24	24
	S	---	24	24	24
	C	---	24	24	24
122	A	28	---	---	---
	S	28	---	---	---
	C	28	---	---	---
123	A	---	---	---	---
	S	---	---	---	---
	C	---	---	---	---
124	A	---	---	---	---
	S	---	---	---	---
	C	---	---	---	---
125	A	32	---	---	---
	S	32	---	---	---
	C	32	---	---	---
126	A	---	---	---	---
	S	---	---	---	---
	C	---	---	---	---
127	A	36	---	---	---
	S	36	---	---	---
	C	36	---	---	---
128	A	40	---	---	---
	S	40	---	---	---
	C	40	---	---	---
129	A	44	---	---	---
	S	44	---	---	---
	C	44	---	---	---
130	A	48	---	---	---
	S	48	---	---	---
	C	48	---	---	---

See footnotes at end of table.

TABLE I. Connector intermateablility - Continued.

Dash number	Material	For connector shell size (reference)				
		MIL-DTL-83723 Series III	MIL-DTL-38999 Series I	MIL-DTL-38999 Series II	MIL-C-28840	MIL-C-27599
116	A	18	17	14	17	---
	S	18	17	14	17	---
	C	18	17	14	17	---
117	A	20	19	16	---	16 19
	S	20	19	16	---	16 19
	C	20	19	16	---	16 19
118	A	---	---	---	19	---
	S	---	---	---	19	---
	C	---	---	---	19	---
119	A	---	---	---	---	---
	S	---	---	---	---	---
	C	---	---	---	---	---
120	A	22	21	18	---	18 21
	S	22	21	18	---	18 21
	C	22	21	18	---	18 21
121	A	24	23	20	23	20 23
	S	24	23	20	23	20 23
	C	24	23	20	23	20 23
122	A	---	25	22	25	22 25
	S	---	25	22	25	22 25
	C	---	25	22	25	22 25
123	A	---	---	24	---	24
	S	---	---	24	---	24
	C	---	---	24	---	24
124	A	---	---	---	29	---
	S	---	---	---	29	---
	C	---	---	---	29	---
125	A	---	---	---	---	---
	S	---	---	---	---	---
	C	---	---	---	---	---
126	A	---	---	---	33	---
	S	---	---	---	33	---
	C	---	---	---	33	---
127	A	---	---	---	---	---
	S	---	---	---	---	---
	C	---	---	---	---	---
128	A	---	---	---	---	---
	S	---	---	---	---	---
	C	---	---	---	---	---
129	A	---	---	---	---	---
	S	---	---	---	---	---
	C	---	---	---	---	---
130	A	---	---	---	---	---
	S	---	---	---	---	---
	C	---	---	---	---	---

1/ For bayonet coupling only.
2/ For threaded coupling only.

TABLE II. Dimensions.

Dash number	Material	A Thread size	E max	P ± .017	S minimum number of slots	W ± .017	Supersedes dash number
101	A S C	.500-28UNEF-28	None	.687	None	.125	-25 -26 -27
102	A S C	.5625-24UNEF-28	.135	.750	2	.125	-28 -29 -30
103	A S C	.625-24UNEF-28	None	.812	None	.125	-31 -32 -33
104	A S C	.625-2OUN-28	None	.812	None	.125	--- --- ---
105	A S C	.625-2OUN-28	None	.812	None	.125	--- --- ---
106	A S C	.6875-24UNEF-28	.135	.875	1	.125	-34 -35 -36
107	A S C	.750-2OUNEF-28	None	.937	None	.125	-37 -38 -39
108	A S C	.8125-2OUNEF-28	.135	1.000	1	.125	--- --- ---
109	A S C	.875-2OUNEF-28	.135	1.062	1	.125	-40 -41 -42
110	A S C	.9375-2OUNEF-28	None	1.123	None	.125	--- --- ---
111	A S C	1.000-2OUNEF-28	.135	1.188	1	.125	-43 -44 -45
112	A S C	1.125-1OUN-28	None	1.312	None	.125	--- --- ---
113	A S C	1.125-18UNEF-28	.135	1.312	1	.125	-46 -47 -48
114	A S C	1.1075-18UNEF-28	None	1.375	None	.125	--- --- ---
115	A S C	1.250-20OUN-28	None	1.438	None	.125	--- --- ---

TABLE II. Dimensions - Continued.

Dash No.	Material	A Thread size	E Max	P ± .017	S Minimum number of slots	W ± .017	Supersedes dash number
116	A S C	1.250-18UNEF-28	.135	1.438	1	.125	-49 -50 -51
117	A S C	1.375-18UNEF-28	.192	1.562	1	.125	-52 -53 -54
118	A S C	1.4375-18UNEF-28	None	1.625	None	.125	--- --- ---
119	A S C	1.500-2OUN-28	None	1.688	None	.125	--- --- ---
120	A S C	1.500-2OUNEF-28	None	1.608	1	.125	-55 -56 -57
121	A S C	1.625-18UNEF-28	.192	1.812	1	.125	-58 -59 -60
122	A S C	1.750-18UNS-28	None	2.000	None	.125	-61 -62 -63
123	A S C	1.875-16UN-28	None	2.125	None	.125	--- --- ---
124	A S C	1.9375-16UN-28	None	2.187	None	.159	--- --- ---
125	A S C	2.000-18UNS-28	None	2.250	None	.189	-64 -65 -66
126	A S C	2.125-16UN-28	None	2.375	None	.189	--- --- ---
127	A S C	2.250-16UN-28	None	2.500	None	.189	-67 -68 -69
128	A S C	2.500-16UN-28	None	2.750	None	.189	-70 -71 -72
129	A S C	2.750-16UN-28	None	3.000	None	.189	-73 -74 -75
130	A S C	3.000-18UN	None	3.250	None	.189	-76 -77 -78

Changes from previous issue. Marginal notations are not used in this revision to identify changes with respect to the previous issue due to the extent of the changes.

Reference documents. This document references the following:

MIL-A-8625	ASTM A484
MIL-C-26482	ASTM A582
MIL-C-27599	NASM33540
MIL-C-28840	SAE-AMS-C-26074
MIL-DTL-26500	SAE-AMS-QQ-P-416
MIL-DTL-38999	
MIL-DTL-5015	
MIL-DTL-83723	
MIL-S-7742	

CONCLUDING MATERIAL

Custodians:
Army - CR
Navy - AS
Air Force - 11
DLA - CC

Review activities:
Army - CR4, MI
Navy - EC, OS

Preparing activity:
DLA - CC

(Project 5935-4419-028)

NOTE: The activities listed above were interested in this document as of the date of this document. Since organizations and responsibilities can change, you should verify the currency of the information above using the ASSIST Online database at http://www.dodssp.daps.mil.