Downloaded from http://www.everyspec.com

INCH-POUND

MS3128J
6 June 2003
SUPERSEDING
MS3128I
5 September 1975

DETAIL SPECIFICATION SHEET

CONNECTOR, RECEPTACLE, ELECTRICAL, CRIMP TYPE, WALL MOUNTING, NO 4/6 HOLES, BAYONET COUPLING, CLASSES E, F AND P

This specification is approved for use by all Departments and Agencies of the Department of Defense.

The requirements for acquiring the product described herein shall consist of this specification and MIL-C-26482.

Inactive for new design as of 15 February 1965.
Use MS3120 for new design.

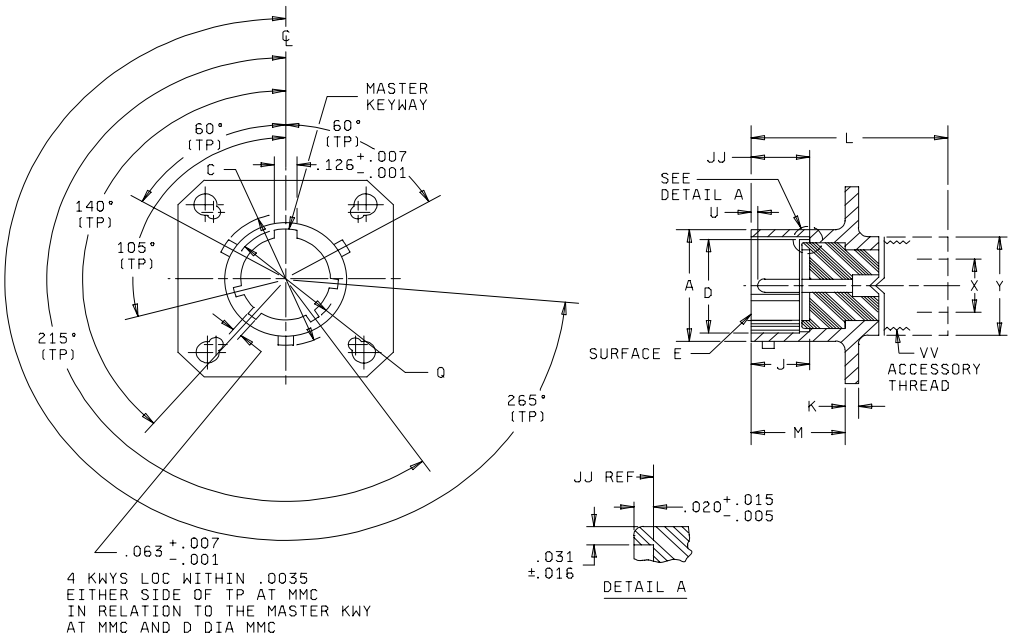

FIGURE 1. Receptacle, style P (pin insert), for classes E, F, and P.

DISTRIBUTION STATEMENT A. Approved for public release; distribution is unlimited.

Downloaded from http://www.everyspec.com

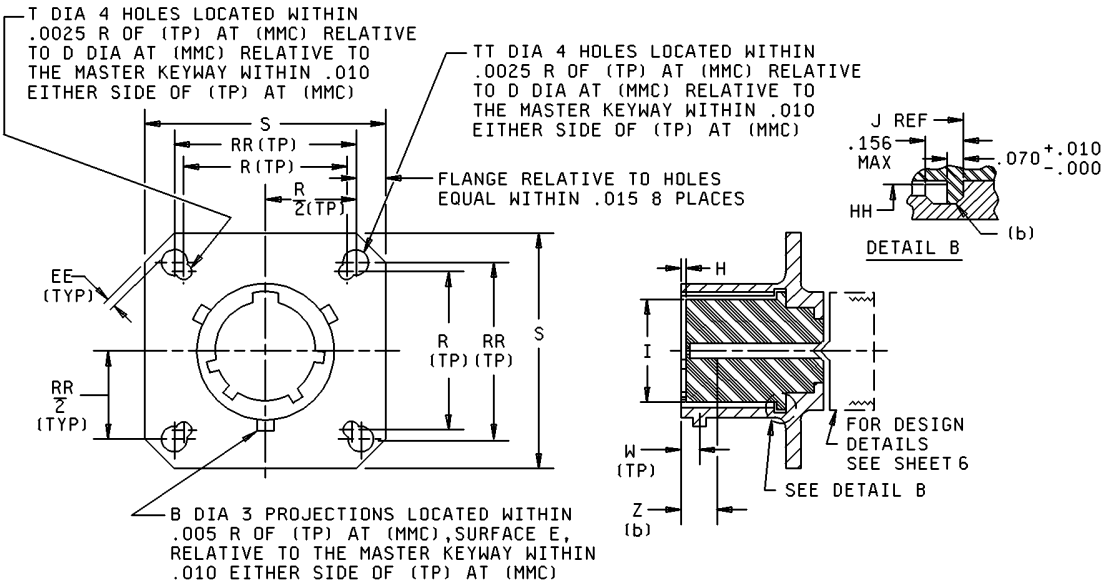

FIGURE 1. Receptacle, style S (socket insert), for classes E, F, and P - Continued.

Downloaded from http://www.everyspec.com

Size	A dia -.005 +.001 od	B +.016 -.001	C dia +.000 -.016 over projection	D dia +.005 -.001 id	EE min edge distance	H +.000 -.020 socket insert location
10	.590	.078	.680	.490	.035	.025
12	.750		.859	.607		
14	.875		.984	.732		
16	1.000		1.108	.857		
18	1.125		1.233	.962		
20	1.250		1.358	1.087	.050	.087
22	1.375		1.483	1.212		
24	1.500	.125	1.610	1.337		

Size	I max insert dia	J ±.010	JJ -.020 +.000 pin insert location	K ±.016 thick mounting flange	JJ -.020 +.000 pin insert location	Q dia -.006 +.005	R (TP) mounting
10	.402	.382	.332	.062	.462	.540	.719
12	.516					.659	.812
14	.641					.814	.906
16	.766					.939	.969
18	.855					1.033	1.062
20	.980	.444	.394	.094		1.164	1.156
22	1.105				.556	1.289	1.250
24	1.229				.589	1.414	1.375

FIGURE 1. Dimensions for classes E, F, and P - Continued.

Downloaded from http://www.everyspec.com

Size	RR (TP) mounting holes	S max length side	T ± .005 dia mounting holes	TT ± .005 dia mounting holes	V (TP) bay pin location
10	.812	1.141	.120	.150	.085
12	.938	1.266			
14	1.031	1.360			
16	1.125	1.453			
18	1.203	1.532			
20	1.297	1.688			.147
22	1.375	1.766			
24	1.500	1.891	.147		

Size	Z (a) - .000 + .028 socket contact spring location	YY thread class 2A	MM max id gasket
10	.153	9/16-24	.457
12		11/16-24	.564
14		13/16-20	.689
16		15/16-20	.814
18		1 1/16-18	.907
20	.215	1 3/16-18	1.039
22		1 5/16-18	1.164
24		1 7/16-18	1.289

NOTES:

1. Dimensions are in inches.
2. Tolerance for angles is 1/2°.
3. Metric equivalents are given for general information only.
4. Distance between end of shell and the point at which a gage pin having the same basic diameter as the Mating contact and a square face first engages socket contact spring.
5. True position (TP) tolerances specified are in accordance with ANSI Y14.5.

FIGURE 1. Dimensions for classes E, F, and P - Continued.

Downloaded from http://www.everyspec.com

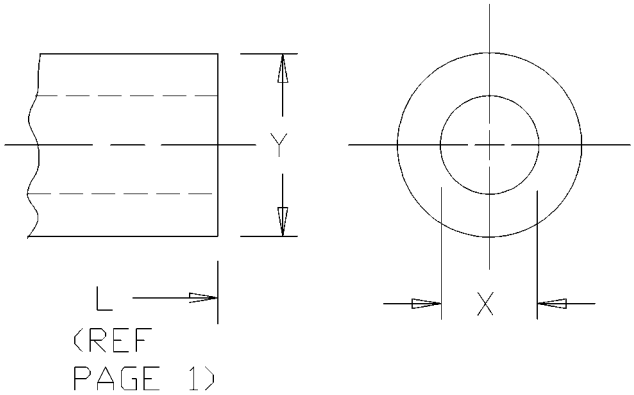

Size	L max over-all length	X dia min id	Y dia max od
10	1.552	.359	.730
12		.469	.858
14		.589	.954
16		.717	1.110
18		.779	1.244
20	1.709	.901	1.360
22		1.009	1.404
24		1.123	1.610

FIGURE 2. Dimensions for class E.

Downloaded from http://www.everyspec.com

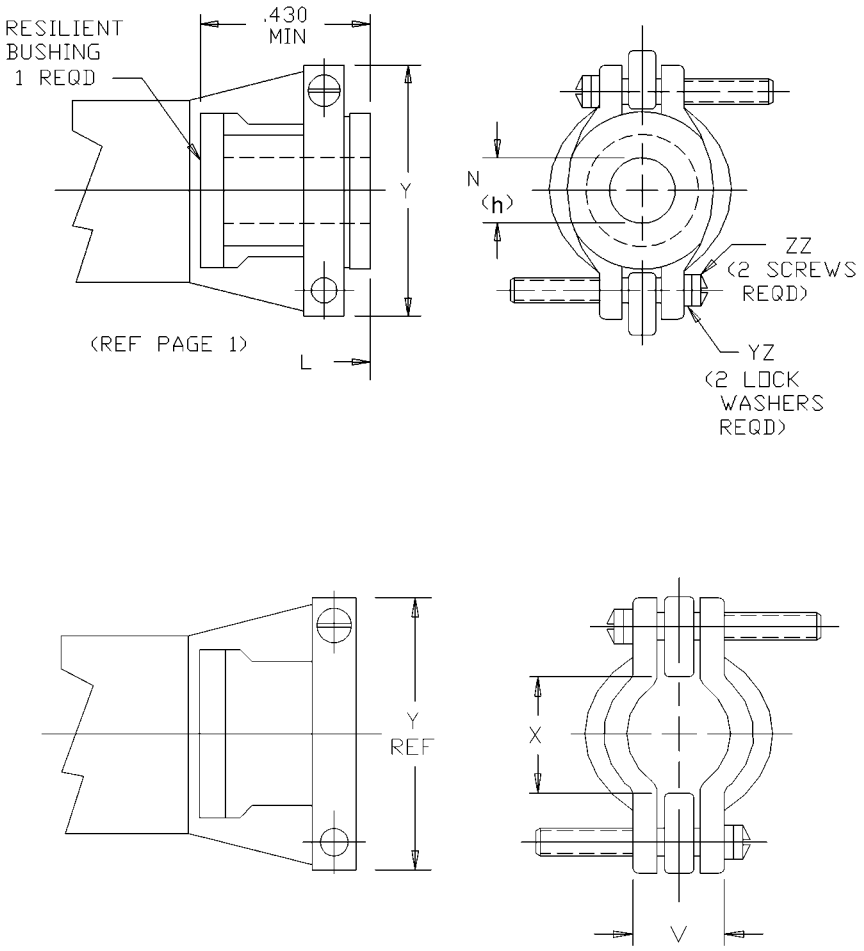

FIGURE 3. Dimensions for class F.

Downloaded from http://www.everyspec.com

Size	L max over-all length	X dia min open	Y max	V max closed
10	2.422	.297	.891	
12		.422	1.016	.281
14		.547	1.141	.325
16	2.537	.609	1.203	.356
18				.456
20		.734	1.469	.519
22	2.824	.922	1.656	
24	2.900	.984	1.750	.657

Size	N (f) free dia ± .010	ZZ screw threads	YZ (g) lock washers NASM35338 OR NASM35333
10	.180	6-32UNC	NASM35338B6L or -6L NASM35333-105 or NASM35333-37
12	.312		
14	.373		
16	.500		
18	.625	8-32UNC	NASM35338B6L or -6L NASM35333-106 or NASM35333-38
20			
22	.750		
24	.800		

FIGURE 3. Dimensions for class F - Continued.

Downloaded from http://www.everyspec.com

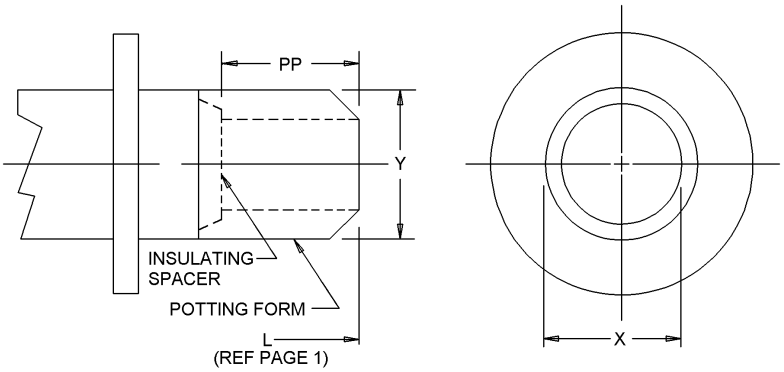

Size	L max over-all length	X dia min	Y dia max	PP min
10	1.750	.434	.734	.250
12		.548	.858	
14		.673	.984	
16		.798	1.110	
18		.899	1.234	
20	1.892	1.024	1.360	
22		1.149	1.484	
24	1.953	1.274	1.610	

FIGURE 4. Dimensions for class P.

Downloaded from http://www.everyspec.com

REQUIREMENTS:

Dimensions and configuration: See figures 1 through 4.
This connector mates with MS3121 and MS3126.
Insert arrangements shall be in accordance with MIL-STD-1669.
Connector accessories: See MIL-C-85049.
Packing material shall meet the requirements of ASTM-D2000.
Sealing member: Bonded to vitreous insert.

Part or Identifying Number (PIN) example:

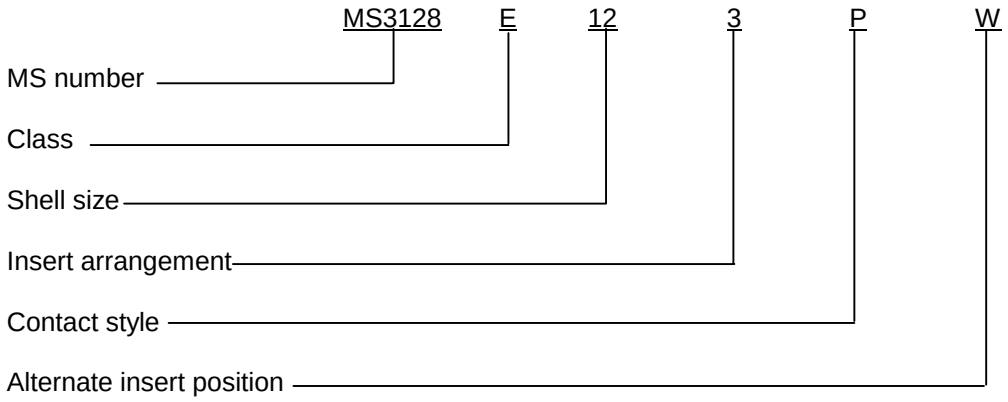

CONCLUDING MATERIAL

Custodians:
Army -CR
Navy -AS
Air Force - 11
DLA - CC

Review activities:
Army - MI
Air Force - 99

Preparing activity:
DLA - CC

(Project 5935-4419-023)

Downloaded from http://www.everyspec.com

STANDARDIZATION DOCUMENT IMPROVEMENT PROPOSAL

INSTRUCTIONS

1. **The preparing activity must complete blocks 1, 2, 3, and 8. In block 1, both the document number and revision letter should be given.**
2. **The submitter of this form must complete blocks 4, 5, 6, and 7, and send to preparing activity.**
3. **The preparing activity must provide a reply within 30 days from receipt of the form.**

NOTE: This form may not be used to request copies of documents, nor to request waivers, or clarification of requirements on current contracts. Comments submitted on this form do not constitute or imply authorization to waive any portion of the referenced document(s) or to amend contractual requirements.

I RECOMMEND A CHANGE:	**1.** DOCUMENT NUMBER **MS3128J**	**2.** DOCUMENT DATE *(YYYYMMDD)* **2003/06/06**

3. DOCUMENT TITLE
CONNECTORS, RECEPTACLE, ELECTRICAL, CRIMP TYPE, WALL MOUNTING FLANGE, NO 4/6 HOLES, BAYONET COUPLING, CLASSES E, F AND P

4. NATURE OF CHANGE *(Identify paragraph number and include proposed rewrite, if possible. Attach extra sheets as needed.)*

5. REASON FOR RECOMMENDATION

6. SUBMITTER

a. NAME *(Last, First, Middle Initial)*	b. ORGANIZATION	
c. ADDRESS *(Include zip code)*	d. TELEPHONE *(Include Area Code)* (1) Commercial (2) DSN *(if applicable)*	**7.** DATE SUBMITTED *(YYYYMMDD)*

8. PREPARING ACTIVITY

a. NAME	b. TELEPHONE *(Include Area Code)*
Defense Logistics Agency Defense Supply Center, Columbus	(1) Commercial **614-692-0565** (2) DSN **850-0565**
c. ADDRESS *(Include Zip Code)* DSCC-VAI 3990 E. Broad St. Columbus, Ohio 43213	IF YOU DO NOT RECEIVE A REPLY WITHIN 45 DAYS, CONTACT: Defense Standardization Program Office (DLSC-LM) 8725 John J. Kingman Road,Suite 2533 Fort Belvoir, Virginia 22060-6621 Telephone (703) 767-6888 DSN 427-6888