Downloaded from http://www.everyspec.com

INCH-POUND

MS3115F
1 March 2007
SUPERSEDING
MS3115E
10 June 1993

DETAIL SPECIFICATION SHEET

CONNECTORS, RECEPTACLE, ELECTRICAL, DUMMY STOWAGE, BAYONET COUPLING, FOR MIL-DTL-26482 CONNECTORS, SERIES 1 AND 2

Reactivated after 1 March 2007 and may be used for new and existing designs and acquisitions.

This specification is approved for use by all Departments and Agencies of the Department of Defense.

The requirements for acquiring the product described herein shall consist of this specification sheet and MIL-DTL-26482.

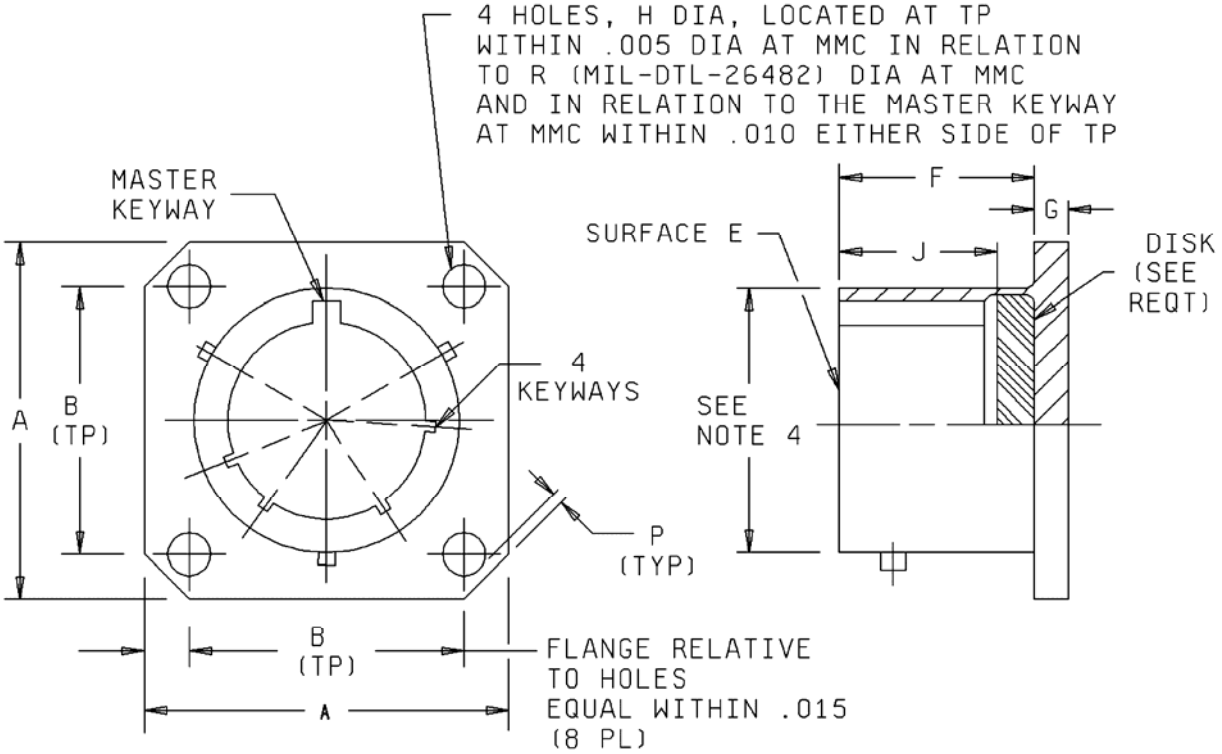

FIGURE 1. Receptacle, dummy stowage, dimensions and configurations.

Downloaded from http://www.everyspec.com

Shell size	A max length side	B (TP) ℄ - ℄ mounting holes	F + .031 - .000 mounting flange location	G ± .016 thick mounting flange	H ± .005 dia mounting holes	J + .010 - .020 disk location	P min edge distance
8	.828 (21.03)	.594 (15.09)	.462 (11.73)	.062 (1.57)	.120 (3.05)	.328 (8.33)	.035 (0.89)
10	.954 (24.23)	.719 (18.26)					
12	1.047 (26.59)	.812 (20.62)					
14	1.141 (28.98)	.906 (23.01)					
16	1.234 (31.34)	.969 (24.61)					
18	1.328 (33.73)	1.062 (26.97)					
20	1.453 (36.91)	1.156 (29.36)	.556 (14.12)	.094 (2.39)		.390 (9.91)	.050 (1.27)
22	1.578 (40.08)	1.250 (31.75)					
24	1.703 (43.26)	1.375 (34.93)	.589 (14.96)		.147 (3.73)		

Inches	mm
.005	0.13
.010	0.25
.015	0.38
.016	0.41
.020	0.51
.031	0.79

NOTES:
1. Dimensions are in inches.
2. Metric equivalents are given for information only.
3 True position (TP) tolerances specified are in accordance with ASME Y14.5M.
4. Intermateability dimensions shall be in accordance with MIL-DTL-26482.

FIGURE 1. Receptacle, dummy stowage, dimensions and configurations - Continued.

Downloaded from http://www.everyspec.com

REQUIREMENTS:

Dimensions and configuration: See figure 1.
Material: Dummy stowage - Aluminum alloy.
Disk material: Synthetic rubber or silicone elastomer.
Finish: A, L and W. E finish is superseded by the W finish.
Fluid resistance: This dummy stowage must meet the fluid resistance requirements in accordance with MIL-DTL-26482, series 1 and 2.
Connector mating: This connector mates with all MIL-DTL-26482, series 1 and 2 connector plugs. Intermateability dimensions are in accordance with MIL-DTL-26482.

Part or Identifying Number (PIN) example:

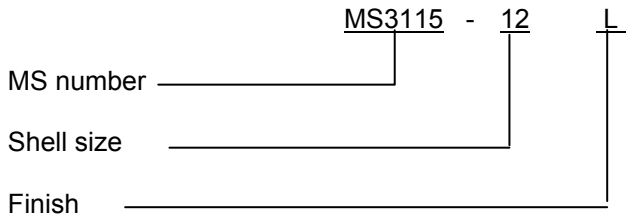

Changes from previous issue. Marginal notations are not used in this revision to identify changes with respect to the previous issue due to the extent of the changes.

Referenced documents. In addition to MIL-DTL-26482, this document references the following:

ASME Y14.5M

CONCLUDING MATERIAL

Custodians:
Army – CR
Navy – AS
Air Force – 11
DLA – CC

Preparing activity:
DLA – CC

(Project 5935-4656-004)

Review activities:
Army – AR, AV, MI
Navy – EC, SH
Air Force – 99

NOTE: The activities listed above were interested in this document as of the date of this document. Since organizations and responsibilities can change, you should verify the currency of the information above using the ASSIST Online database at http://assist.daps.dla.mil.