Downloaded from http://www.everyspec.com

INCH-POUND

MS3114K
6 June 2003
SUPERSEDING
MS3114J
10 June 1993

DETAIL SPECIFICATION SHEET

CONNECTORS, RECEPTACLE, ELECTRICAL, SERIES 1, SOLDER TYPE, JAM NUT MOUNTING, BAYONET COUPLING, CLASSES E, F, H, AND P

This specification is approved for use by all Departments and Agencies of the Department of Defense.

The requirements for acquiring the product described herein shall consist of this specification and MIL-C-26482.

Inactive for new design as of 10 June 1993. For new design, use MS3474 for classes E, F, and P

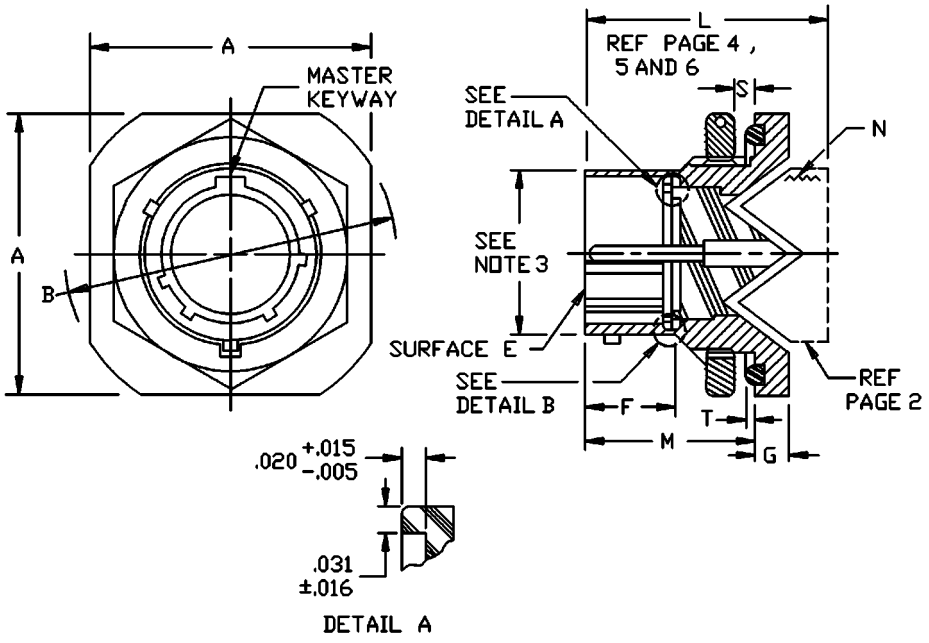

FIGURE 1. Dimensions and configurations for classes E, F, and P.

DISTRIBUTION STATEMENT A. Approved for public release; distribution is unlimited.

Downloaded from http://www.everyspec.com

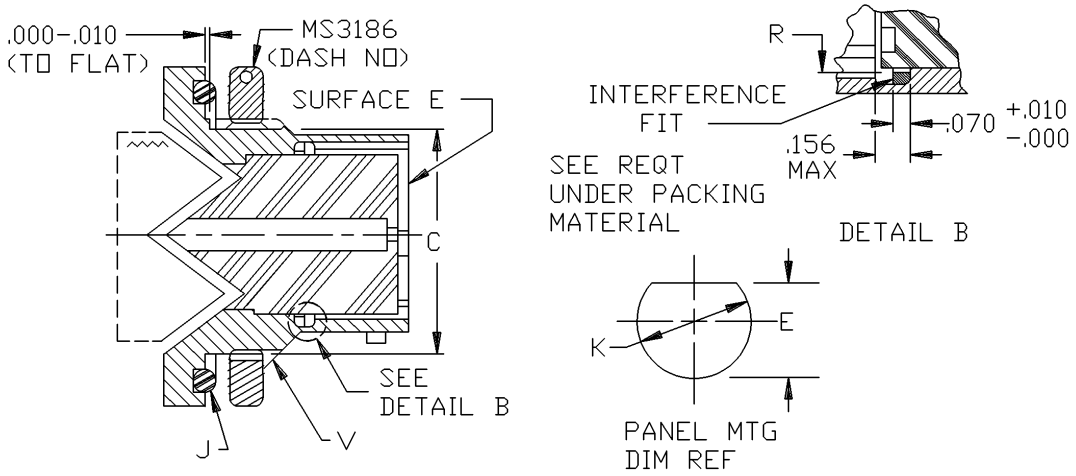

Shell size	A max length	B dia +.000 -.032 across flange corner	C +.000 -.010 mtg flat	E +.010 -.005 Panel flat location	F Min. mounting thread location	G ± .020 thick mounting flange	J O-ring Seal SAE-AS29513-	K + .010 - .005 panel mounting hole
8	.954	1.078	.530	.540	.384	.117	17	.572
10	1.078	1.203	.655	.665			19	.697
12	1.266	1.391	.818	.828			22	.885
14	1.391	1.516	.942	.952			24	1.010
16	1.516	1.641	1.066	1.076			26	1.135
18	1.641	1.766	1.191	1.201			28	1.260
20	1.828	1.954	1.316	1.326	.446	.148	128	1.385
22	1.954	2.078	1.441	1.451			130	1.510
24	2.078	2.203	1.566	1.576	.479		132	1.635

FIGURE 1. Dimensions and configurations for classes E, F, and P - Continued.

Downloaded from http://www.everyspec.com

Shell size	M + .031 - .000 mounting flange location	N UNEF-2B accessory thread	R max ID gasket	S Panel thick ref		T ± .011 O-ring projection	V UNEF-2A mounting thread
				min	max		
8	.691	.625-24	.329	.062	.125	.023	.5625-24
10		.750-20	.457				.6875-24
12		.875-20	.564				.875-20
14		1.000-20	.689				1.000-20
16		1.125-18	.814				1.125-18
18		1.250-18	.907				1.250-18
20	.879	1.375-18	1.039		.250	.028	1.375-18
22		1.500-18	1.164				1.500-18
24	.912	1.625-18	1.289				1.625-18

FIGURE 1. Connectors and dimensions for classes E, F, and P - Continued.

Downloaded from http://www.everyspec.com

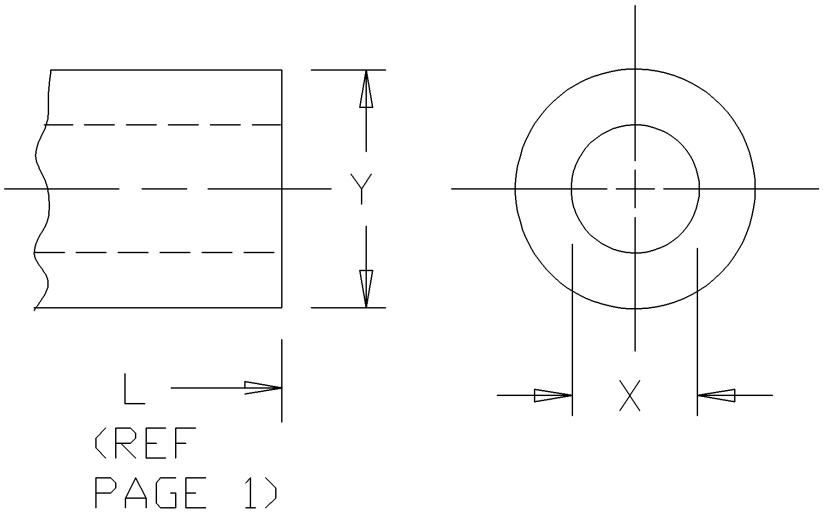

CLASS E

Connection dimensions for class E

Shell Size	L Max overall length	X dia min ID	Y dia max OD
8	1.344	.269	.750
10		.359	.875
12		.469	1.000
14		.589	1.125
16		.717	1.250
18		.779	1.375
20	1.594	.901	1.531
22		1.009	1.656
24	1.641	1.123	1.781

FIGURE 1. Dimensions and configurations for classes E, F, and P - Continued.

Downloaded from http://www.everyspec.com

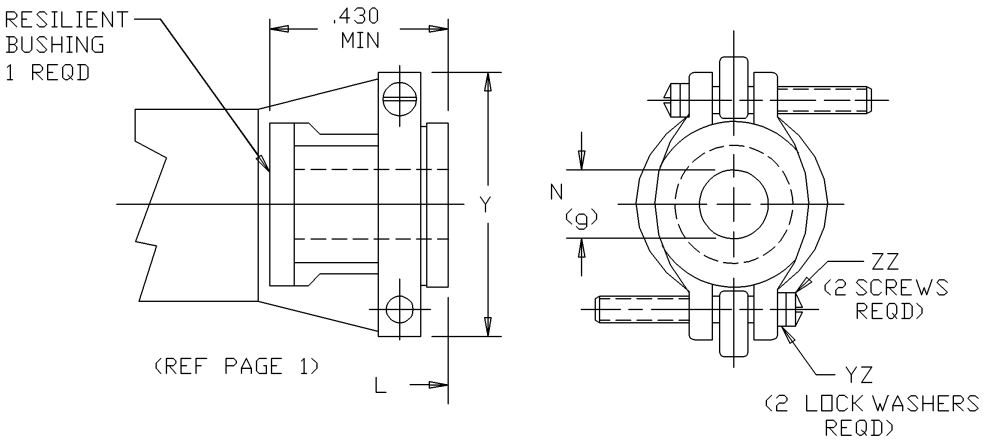

CLASS F

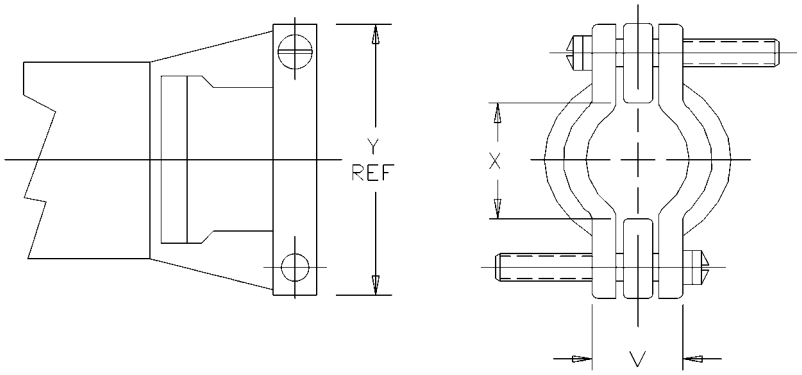

DIMENSIONS WITH BUSHING REMOVED, CLASS F

FIGURE 1. Dimensions and configuration for classes E, F, and P - Continued.

Downloaded from http://www.everyspec.com

Connector dimensions for class F

Shell size	L max overall length	X dia min open	Y max	V max closed	N free dia ±.010 (see note 4)	ZZ screw threads	YZ Lockwashers NASMS35338 or NASM35333 types (see note 5)
8	1.906	.234	.828	.187	.125	6-32 UNC	NASM35338-98 or -41 NASM35333-105 or -36 or - 37
10		.297	.891	.187	.188		
12		.422	1.016	.281	.312		
14		.547	1.141	.325	.375		
16	2.047	.609	1.203	.356	.500		
18	2.078	.734	1.469	.456	.625	8-32 UNC	NASM35338-99 or -42 NASM35333-106 or -38
20	2.328			.519	.625		
22		.922	1.656		.750		
24	2.453	.984	1.750	.657	.800		

FIGURE 1. Dimensions and configuration for classes E, F, and P - Continued.

Downloaded from http://www.everyspec.com

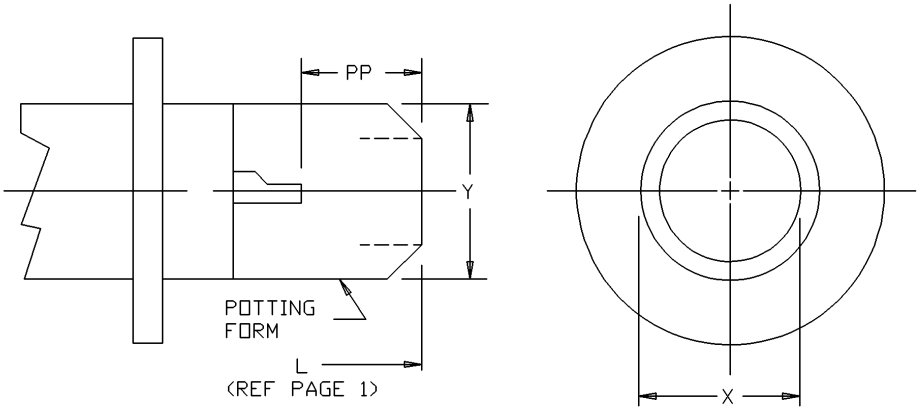

CLASS P

Connector dimensions for class P

Shell Size	L max overall length	X dia min ID	Y dia max OD	PP min
8	1.391	.317	.608	.250
10		.434	.734	
12		.548	.858	
14		.673	.984	
16		.798	1.110	
18		.899	1.234	
20	1.641	1.024	1.360	
22		1.149	1.484	
24	1.703	1.274	1.610	

FIGURE 1. Dimensions and configurations for classes E, F, and P - Continued.

Downloaded from http://www.everyspec.com

Inches	mm	Inches	mm	Inches	mm	Inches	mm	Inches	mm
.005	0.13	.375	9.52	.691	17.55	1.024	26.01	1.451	36.86
.010	0.25	.384	9.75	.697	17.70	1.039	26.39	1.469	37.31
.011	0.28	.422	10.72	.717	18.21	1.066	27.08	1.484	37.69
.015	0.38	.430	10.92	.734	18.64	1.076	27.33	1.500	38.10
.016	0.41	.434	11.02	.750	19.05	1.078	27.38	1.510	38.35
.020	0.51	.446	11.33	.779	19.79	1.110	28.19	1.516	38.51
.023	0.58	.456	11.58	.798	20.27	1.123	28.52	1.531	38.89
.028	0.71	.457	11.61	.800	20.32	1.125	28.58	1.566	39.78
.031	0.79	.469	11.91	.814	20.68	1.135	28.83	1.576	40.03
.032	0.81	.479	12.17	.818	20.78	1.141	28.98	1.549	40.49
.062	1.57	.500	12.70	.828	21.03	1.149	29.18	1.610	40.89
.070	1.78	.519	13.18	.858	21.79	1.164	29.59	1.625	41.28
.117	2.97	.530	13.46	.875	22.22	1.191	30.25	1.635	41.53
.125	3.18	.540	13.72	.879	22.33	1.201	30.51	1.641	41.68
.148	3.75	.547	13.89	.885	22.48	1.203	30.56	1.656	42.06
.156	3.96	.548	13.92	.891	22.63	1.234	31.34	1.703	43.26
.187	4.75	.5625	14.288	.899	22.83	1.250	31.75	1.750	44.45
.188	4.78	.564	14.33	.901	22.89	1.260	32.00	1.766	44.86
.234	5.94	.572	14.53	.907	23.04	1.266	32.16	1.781	45.24
.250	6.35	.589	14.96	.912	23.16	1.275	32.39	1.828	46.43
.259	6.58	.608	15.44	.922	23.42	1.289	32.74	1.906	48.41
.281	7.14	.609	15.47	.942	23.93	1.316	33.43	1.954	49.63
.297	7.54	.625	15.88	.952	24.18	1.326	33.68	2.047	51.99
.312	7.92	.655	16.64	.954	24.23	1.344	34.14	2.078	52.78
.317	8.05	.657	16.69	.984	24.99	1.360	34.54	2.203	55.96
.325	8.26	.665	16.89	1.000	25.40	1.375	34.92	2.328	59.13
.329	8.36	.673	17.09	1.009	25.63	1.385	35.18	2.453	62.31
.356	9.04	.6875	17.462	1.010	25.65	1.391	35.33		
.359	9.12	.689	17.50	1.016	25.81	1.441	36.60		

NOTES:

1. Dimensions are in inches.
2. Metric equivalents are given for information only.
3. Intermateability dimensions shall be in accordance with MIL-C-26482.
4. Use MS3420 bushing if reduced opening is required.
5. Lock washers may be captive.
6. Not for Air Force use. Use MS3474 in lieu of MS3114 classes E, F, and P.
7. True position (TP) tolerances specified are in accordance with ANSI Y14.5.

FIGURE 1. Dimensions and configurations for classes E, F, and P - Continued.

Downloaded from http://www.everyspec.com

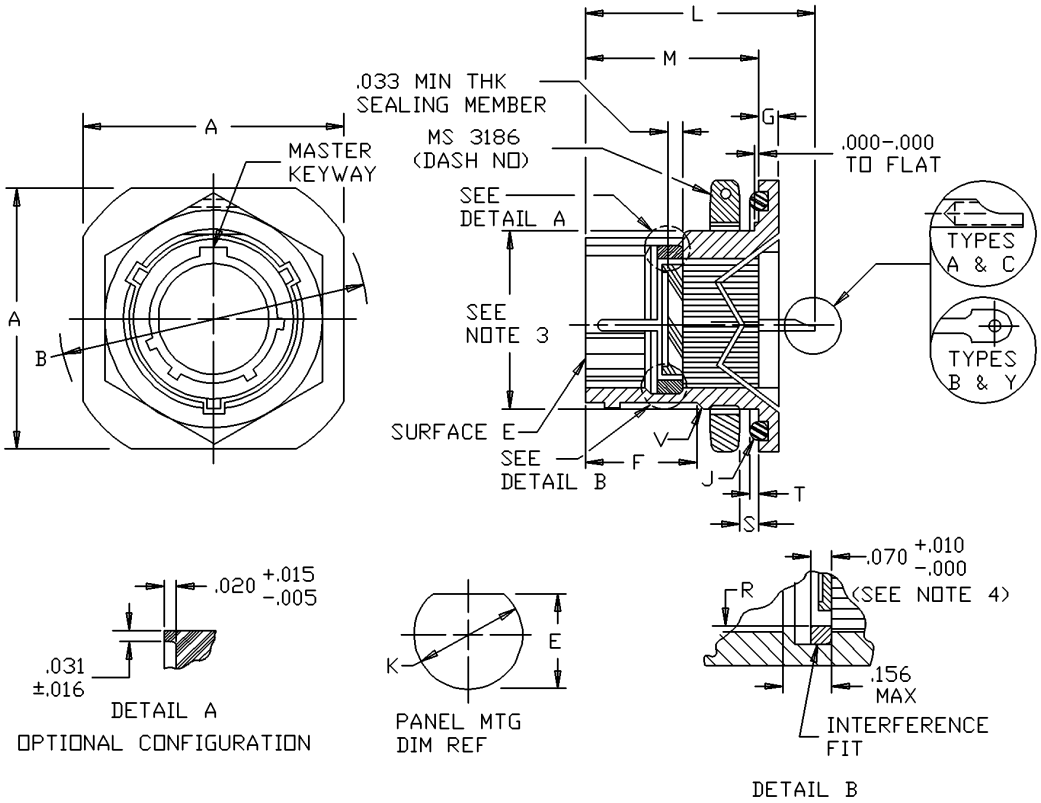

NOTE: Inactive for new design. For new design, use MS3474 for class H.

FIGURE 2. Dimensions and configurations for class H, style P (pin insert).

Downloaded from http://www.everyspec.com

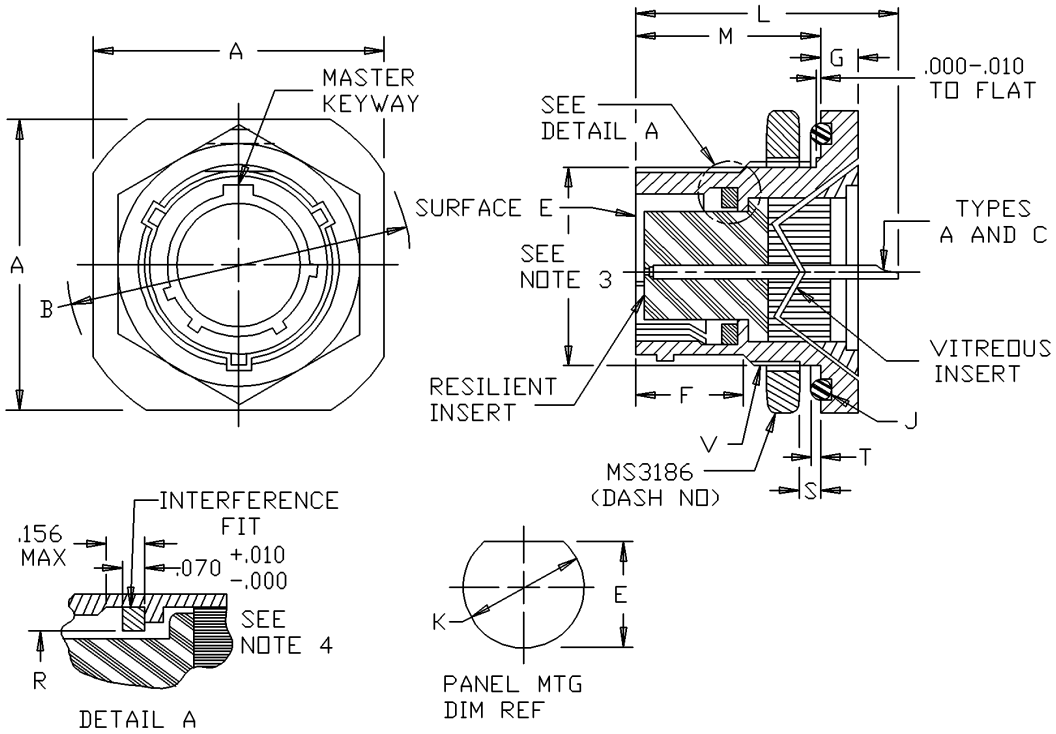

FIGURE 2. Dimensions and configurations for class H, style S (socket insert) - Continued.

Downloaded from http://www.everyspec.com

Shell Size	A max length	B dia + .000 - .032 across flange corner	C + .000 - .010 mounting flat	E + .010 - .005 panel mounting hole	F min mounting thread location	G ± .020 thick mounting flange	J O-ring seal SAE-AS29513-	K + .010 - .005 panel mounting hole
8	.954	1.078	.530	.540	.384	.117	17	.572
10	1.078	1.203	.655	.665			19	.697
12	1.266	1.391	.818	.828			22	.885
14	1.391	1.516	.942	.952			24	1.010
16	1.516	1.641	1.066	1.076			.26	1.135
18	1.641	1.766	1.191	1.201			28	1.260
20	1.828	1.954	1.316	1.326	.446	.148	128	1.385
22	1.954	2.078	1.441	1.451			130	1.510
24	2.078	2.203	1.566	1.576	.479		132	1.635

Material and finish:

Shell types A and B passivated stainless steel with gold plated contacts.
Shell types C and Y tin-plated ferrous alloy with tin-plated contacts.
Tin plating shall be no more than 97% pure tin and 3% lead.
Bayonet pins, passivated stainless steel.

FIGURE 2. Dimensions and configuration for class H - Continued.

Downloaded from http://www.everyspec.com

Shell Size	L max	M +.031 .000 mounting flange location	R max ID gasket	S panel thick ref		T ±.011 O-ring Projection	V UNEF-2A mounting thread
				Min	Max		
8	.875	.691	.329	.062	.125	.023	.5625-24
10			.457				.6875-24
12			.564				.875-20
14			.689				1.000-20
16			.814				1.125-18
18			.907				1.250-18
20	1.094	.879	1.039		.250	.028	1.375-18
22			1.164				1.500-18
24	1.125	.912	1.289				1.625-18

Material and finish:
Shell types A and B passivated stainless steel with gold plated contacts.
Shell types C and Y, tin-plated ferrous alloy with tin-plated contacts.
Tin plating shall be no more than 97% pure tin and 3% lead.
Bayonet pins, passivated stainless steel.

FIGURE 2. Dimensions and configuration for class H - Continued.

Downloaded from http://www.everyspec.com

Inches	mm	Inches	mm	Inches	mm	Inches	mm	Inches	mm
.005	0.13	.250	6.35	.814	20.68	1.078	27.38	1.441	36.60
.010	0.25	.329	8.36	.818	20.78	1.094	27.79	1.451	36.69
.011	0.28	.384	9.75	.828	21.03	1.125	28.58	1.500	38.10
.015	0.38	.446	11.33	.875	22.22	1.135	28.83	1.510	38.35
.016	0.41	.457	11.61	.879	22.33	1.164	29.59	1.516	38.51
.020	0.51	.479	12.17	.885	22.48	1.191	30.25	1.566	39.78
.023	0.58	.530	13.46	.907	23.04	1.201	30.51	1.576	40.03
.028	0.71	.540	13.72	.912	23.16	1.203	30.56	1.625	41.28
.031	0.79	.5625	14.288	.942	23.93	1.250	31.75	1.635	41.53
.032	0.81	.564	14.33	.952	24.18	1.260	32.00	1.641	41.68
.033	0.84	.572	14.53	.954	24.23	1.266	32.16	1.766	44.86
.062	1.57	.655	16.64	1.000	25.40	1.289	32.74	1.828	46.43
.070	1.78	.665	16.89	1.010	25.65	1.316	33.43	1.954	49.63
.117	2.97	.6875	17.462	1.024	26.01	1.326	33.68	2.078	52.78
.125	3.18	.689	17.50	1.039	26.39	1.375	34.92	2.203	55.96
.148	3.75	.691	17.55	1.066	27.08	1.385	35.18		
.156	3.96	.697	17.70	1.076	27.33	1.391	35.33		

NOTES:
1. Dimensions are in inches.
2. Metric equivalents are given for information only.
3. Intermateability dimensions shall be in accordance with MIL-C-26482.
4. Sealing member bonded to vitreous insert.
5. Not for Air Force use. Use MS3449 in lieu of MS3114 class H.
6. True position (TP) tolerances specified are in accordance with ANSI Y14.5.

FIGURE 2. Dimensions and configurations for class H - Continued.

Downloaded from http://www.everyspec.com

REQUIREMENTS:

Dimensions and configuration: See figures 1 and 2.
Connector mating: This connector mates with MS3111 and MS3116.
For insert arrangement: See MIL-STD-1669.
Sealing member: Bonded to vitreous insert.
Packing material shall meet the requirements of ASTM-D2000.

Part or Identifying Number (PIN) example:

FIGURE 1.

PIN for classes E, F and P:

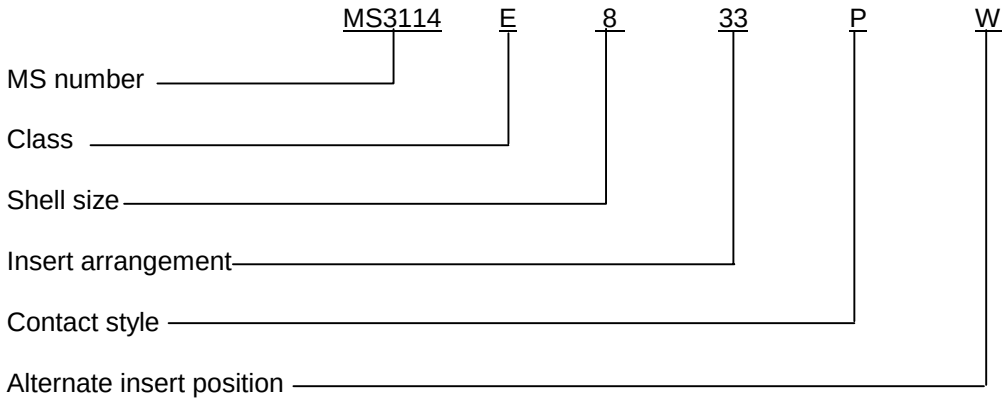

FIGURE 2.

PIN for class H:

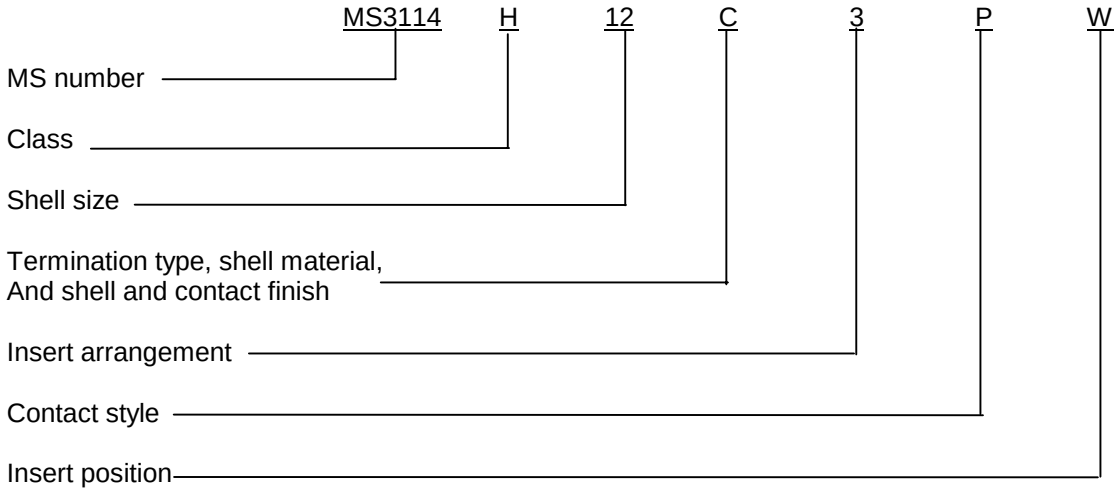

Downloaded from http://www.everyspec.com

CONCLUDING MATERIAL

Custodians:
Army - CR
Navy - AS
Air Force - 11
DLA - CC

Review activities:
Army - AR, AV
Navy - EC, SH
Air Force - 99

Preparing activity:
DLA - CC

(Project 5935-4419-017)

Downloaded from http://www.everyspec.com

STANDARDIZATION DOCUMENT IMPROVEMENT PROPOSAL

INSTRUCTIONS

1. **The preparing activity must complete blocks 1, 2, 3, and 8. In block 1, both the document number and revision letter should be given.**
2. **The submitter of this form must complete blocks 4, 5, 6, and 7, and send to preparing activity.**
3. **The preparing activity must provide a reply within 30 days from receipt of the form.**

NOTE: This form may not be used to request copies of documents, nor to request waivers, or clarification of requirements on current contracts. Comments submitted on this form do not constitute or imply authorization to waive any portion of the referenced document(s) or to amend contractual requirements.

I RECOMMEND A CHANGE:	**1.** DOCUMENT NUMBER **MS3114K**	**2.** DOCUMENT DATE *(YYYYMMDD)* **2003/06/06**

3. DOCUMENT TITLE
CONNECTORS, RECEPTACLE, ELECTRICAL, SERIES I, SOLDER TYPE, JAM NUT MOUNTING, BAYONET COUPLING, CLASSES E, F, H, AND P

4. NATURE OF CHANGE *(Identify paragraph number and include proposed rewrite, if possible. Attach extra sheets as needed.)*

5. REASON FOR RECOMMENDATION

6. SUBMITTER

a. NAME *(Last, First, Middle Initial)*	b. ORGANIZATION	
c. ADDRESS *(Include zip code)*	d. TELEPHONE *(Include Area Code)* (1) Commercial (2) DSN *(if applicable)*	**7.** DATE SUBMITTED *(YYYYMMDD)*

8. PREPARING ACTIVITY

a. NAME	b. TELEPHONE *(Include Area Code)*
Defense Logistics Agency Defense Supply Center, Columbus	(1) Commercial **614-692-0565** (2) DSN **850-0565**
c. ADDRESS *(Include Zip Code)* DSCC-VAI 3990 E. Broad St. Columbus, Ohio 43213	IF YOU DO NOT RECEIVE A REPLY WITHIN 45 DAYS, CONTACT: Defense Standardization Program Office (DLSC-LM) 8725 John J. Kingman Road,Suite 2533 Fort Belvoir, Virginia 22060-6621 Telephone (703) 767-6888 DSN 427-6888