Downloaded from http://www.everyspec.com

INCH-POUND

MS3111D
1 March 2007
SUPERSEDING
MS3111C
19 August 1976

DETAIL SPECIFICATION SHEET

CONNECTORS, PLUG, ELECTRICAL, SOLDER TYPE, CABLE CONNECTING, BAYONET COUPLING, CLASSES E, F, J, AND P, SERIES 1

Inactive for new design after 15 December 1998. For new design, use MS3476.

This specification is approved for use by all Departments and Agencies of the Department of Defense.

The requirements for acquiring the product described herein shall consist of this specification sheet and MIL-DTL-26482.

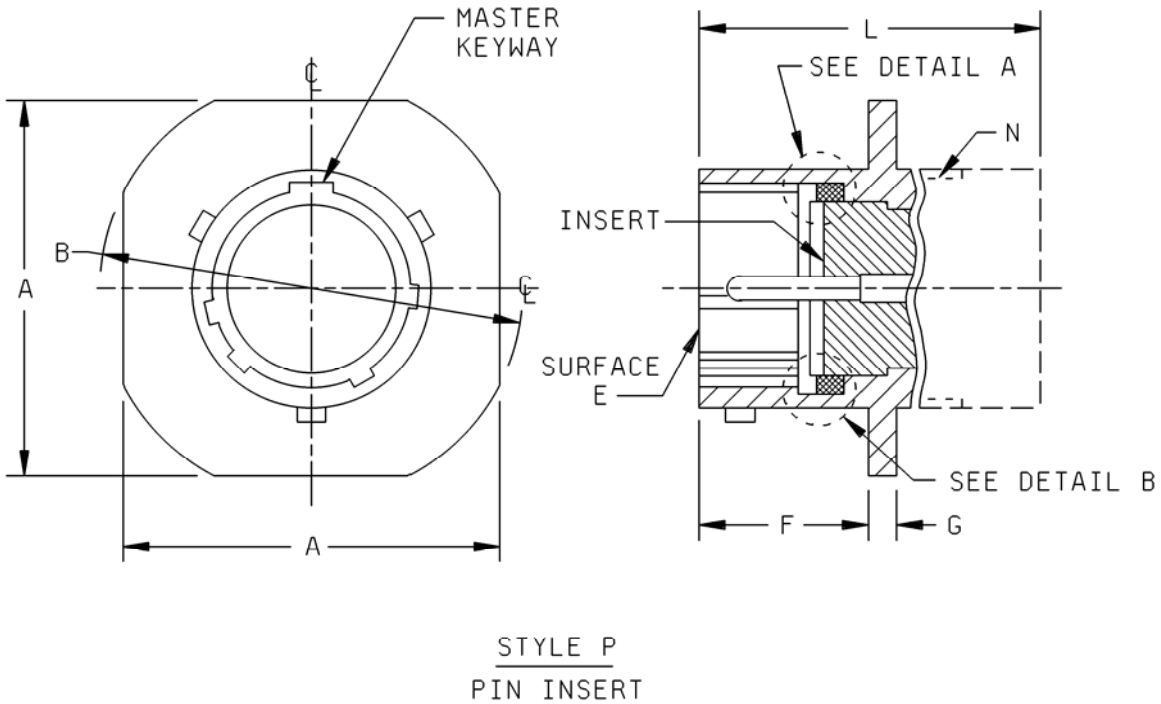

FIGURE 1. Plug, styles P and S, pin and socket inserts.

Downloaded from http://www.everyspec.com

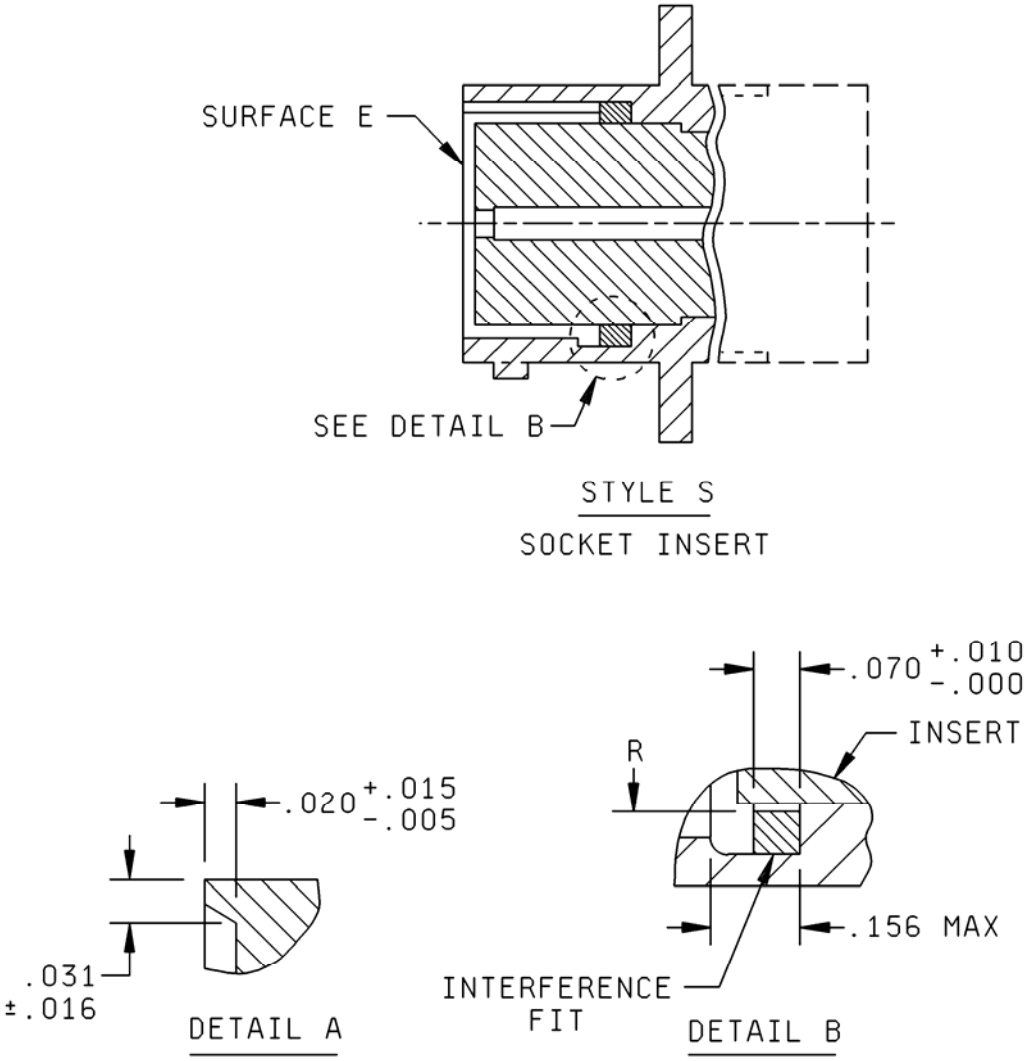

FIGURE 1. Plug, styles P and S, pin and socket inserts - Continued.

Downloaded from http://www.everyspec.com

Shell size	A max length	B dia ± .020 across flange corners	F + .031 - .000 mounting flange location	G ± .016 thick mounting flange	N UNEF-2A accessory thread	R max id gasket
8	.828 (21.03)	.938 (23.83)	.400 (10.16)	.094 (2.39)	.4375-28	.329 (8.36)
10	.954 (24.23)	1.062 (26.97)			.5625-24	.457 (11.61)
12	1.047 (26.59)	1.156 (29.36)			.6875-24	.564 (14.33)
14	1.141 (28.98)	1.250 (31.75)			.8125-20	.689 (17.50)
16	1.234 (31.34)	1.344 (34.14)			.9375-20	.814 (20.68)
18	1.328 (33.73)	1.438 (36.53)			1.0625-18	.907 (23.04)
20	1.453 (36.91)	1.562 (39.67)	.535 (13.59)	.115 (2.92)	1.1875-18	1.039 (26.39)
22	1.578 (40.08)	1.688 (42.88)			1.3125-18	1.164 (29.57)
24	1.700 (43.18)	1.812 (46.02)	.558 (14.17)		1.4375-18	1.289 (32.74)

Inches	mm	Inches	mm
.005	0.13	.020	0.51
.010	0.25	.031	0.79
.015	0.38	.070	1.78
.016	0.41	.156	3.96

NOTES:
1. Dimensions are in inches. Metric equivalents are given for information only.
2. True position (TP) tolerances specified are in accordance with ASME Y14.5M.
3. Intermateability dimensions shall be in accordance with MIL-DTL-26482.

FIGURE 1. Plug, styles P and S, pin and socket inserts - Continued.

Downloaded from http://www.everyspec.com

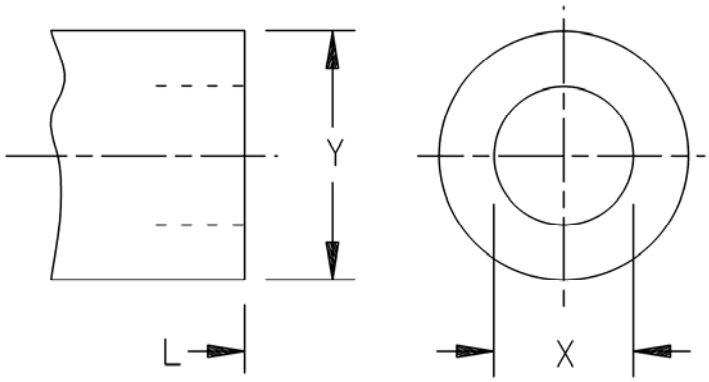

Shell size	L max overall length	X dia min ID	Y dia max OD
8	1.328 (33.73)	.259 (6.58)	.608 (15.44)
10		.359 (9.12)	.734 (18.64)
12		.469 (11.91)	.858 (21.79)
14		.589 (14.96)	.984 (24.99)
16		.727 (18.47)	1.110 (28.19)
18		.779 (19.79)	1.234 (31.34)
20	1.531 (38.89)	.901 (22.89)	1.360 (34.54)
22		1.009 (25.63)	1.484 (37.69)
24	1.594 (40.49)	1.123 (28.52)	1.610 (40.89)

NOTES:
1. Dimensions are in inches. Metric equivalents are given for information only.
2. True position (TP) tolerances specified are in accordance with ASME Y14.5M.
3. Intermateability dimensions shall be in accordance with MIL-DTL-26482.

FIGURE 2. Plug, rear accessories configurations, class E.

Downloaded from http://www.everyspec.com

Shell size	L max overall length	Y dia max	$N_{(g)}$ ± .010 free dia	ZZ screw threads	YZ Lockwashers NASM 35338 or AN936 types
8	1.922 (48.82)	.828 (21.03)	.125 (3.18)	6-32 UNC	NASM 35338 B6L OR -6L AN936 A6B OR -A6
10		.891 (22.63)	.188 (4.78)		
12		1.016 (25.81)	.312 (7.92)		
14		1.161 (29.49)	.375 (9.53)		
16	2.047 (51.99)	1.203 (30.56)	.500 (12.70)		
18	2.078 (52.78)	1.469 (37.31)	.625 (15.88)	8-32 UNC	NASM 35338 B8L OR -8L AN936 A8B OR -A8
20	2.344 (59.54)		.625 (15.88)		
22		1.656 (42.06)	.750 (19.05)		
24	2.406 (61.11)	1.750 (44.45)	.800 (20.32)		

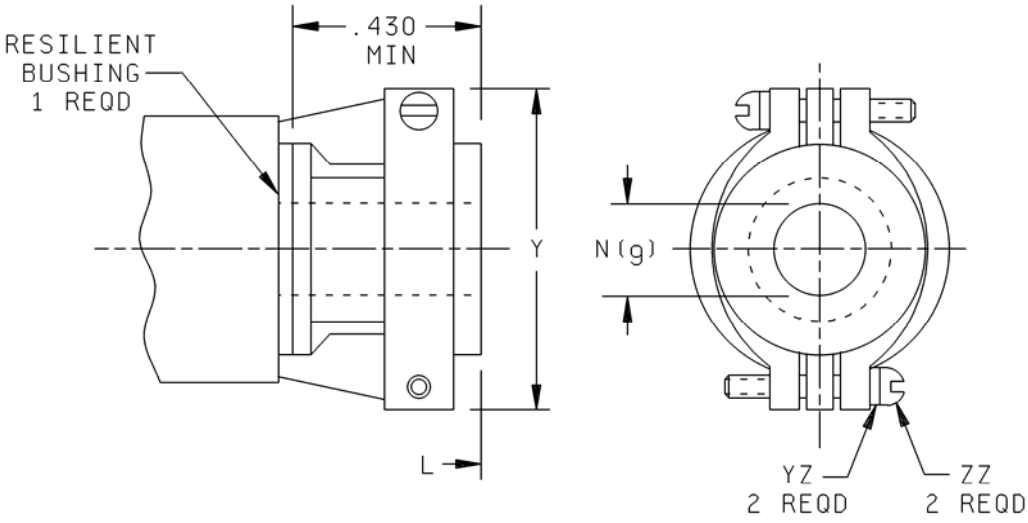

FIGURE 3. Plug, rear accessories configurations, class F.

Downloaded from http://www.everyspec.com

Shell size	X dia min open	V max closed
8	.234 (5.94)	.157 (3.99)
10	.297 (7.54)	.187 (4.75)
12	.422 (10.72)	.281 (7.14)
14	.547 (13.89)	.325 (8.26)
16	.609 (15.47)	.356 (9.04)
18	.734 (18.64)	.456 (11.58)
20		.519 (13.18)
22	.922 (23.42)	
24	.984 (24.99)	.657 (16.69)

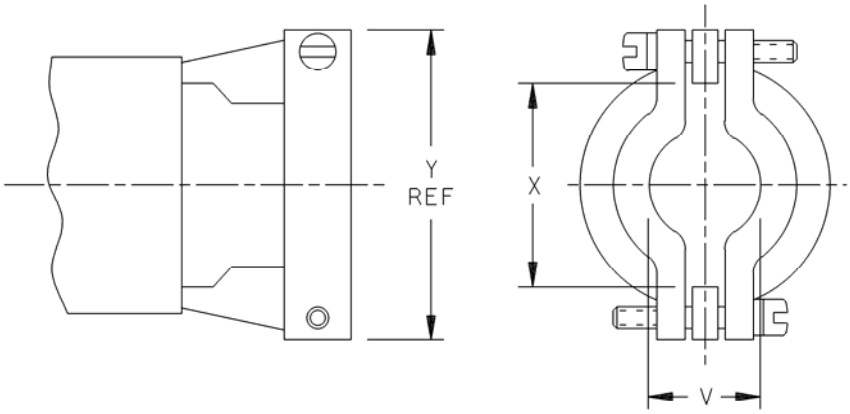

Dimensions with bushings removed

NOTES:
1. Dimensions are in inches. Metric equivalents are given for information only.
2. True position (TP) tolerances specified are in accordance with ASME Y14.5M.
3. Intermateability dimensions shall be in accordance with MIL-DTL-26482.
4. Use MS3420 bushing if reduced opening is required.
5. Lock washers may be captive.

FIGURE 3. Plug, rear accessories configurations, class F - Continued.

Downloaded from http://www.everyspec.com

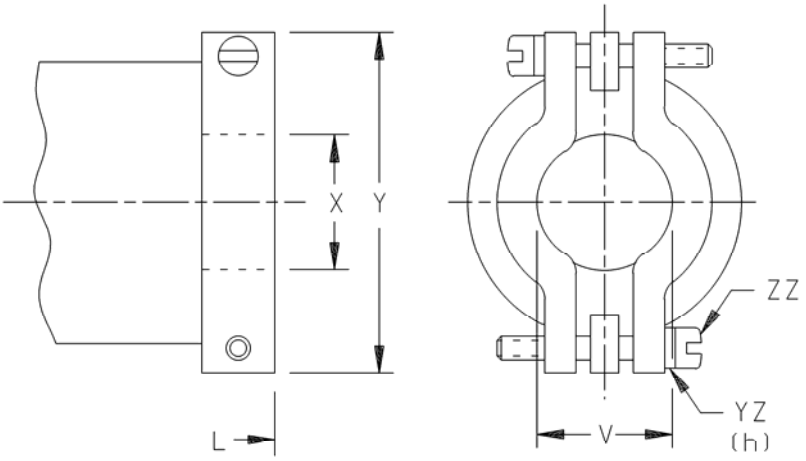

Shell Size	L Max Overall length	V Max Closed	X ID Gland Seal Min Range		Y Dia Max	ZZ Screw Threads	YZ (h) Lockwashers NASM 35338 or AN936 TYPES
			Min	Max			
8	2.271 (57.68)	.157 (3.99)	.168 (4.27)	.230 (5.84)	.828 (21.03)	6-32 UNC	NASM 35338 B6L or -6L AN936 A6B or -A6
10		.187 (4.75)	.205 (5.21)	.312 (7.92)	.891 (22.63)		
12	2.411 (61.24)	.281 (7.14)	.338 (8.59)	.442 (11.23)	1.016 (25.81)		
14	2.599 (66.01)	.325 (8.26)	.416 (10.57)	.539 (13.69)	1.141 (28.98)		
16	2.943 (74.75)	.356 (9.04)	.550 (13.97)	.616 (15.65)	1.203 (30.56)		
18	3.172 (80.57)	.456 (11.58)	.600 (15.24)	.672 (17.07)	1.469 (37.31)		
20	3.610 (91.69)	.519 (13.18)	.635 (16.13)	.747 (18.97)			NASM 35338 B8L or -8L AN936 A8B or -A8
22	3.766 (95.66)		.670 (17.02)	.846 (21.49)	1.656 (42.06)		
24	3.985 (101.22)	.657 (16.69)	.760 (19.30)	.894 (22.71)	1.750 (44.45)		

NOTES:
1. Dimensions are in inches. Metric equivalents are given for information only.
2. True position (TP) tolerances specified are in accordance with ASME Y14.5M.
3. Intermateability dimensions shall be in accordance with MIL-DTL-26482.

FIGURE 4. Plug, rear accessories configurations, class J.

Downloaded from http://www.everyspec.com

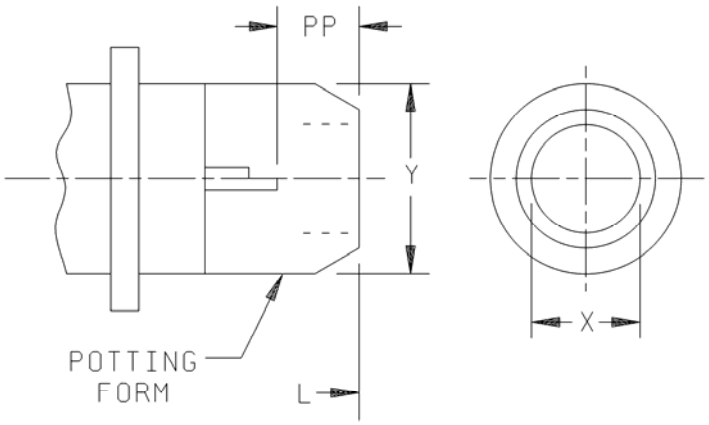

Shell Size	L max overall length	X dia min ID	Y dia max OD	PP min
8	1.453 (36.91)	.317 (8.05)	.608 (15.44)	.250 (6.35)
10		.434 (11.02)	.734 (18.64)	
12		.548 (13.92)	.858 (21.79)	
14		.673 (17.09)	.984 (24.99)	
16		.798 (20.27)	1.110 (28.19)	
18		.899 (22.83)	1.234 (31.34)	
20	1.672 (42.47)	1.024 (26.01)	1.360 (34.54)	
22		1.149 (29.18)	1.686 (42.82)	
24	1.734 (44.04)	1.274 (32.36)	1.610 (40.89)	

NOTES:
1. Dimensions are in inches. Metric equivalents are given for information only.
2. True position (TP) tolerances specified are in accordance with ASME Y14.5M.
3. Intermateability dimensions shall be in accordance with MIL-DTL-26482.
4. Use MS3420 bushing if reduced opening is required.
5. Lock washers may be captive.

FIGURE 5. Plug, rear accessories configurations, class P.

Downloaded from http://www.everyspec.com

REQUIREMENTS:

Dimensions and configurations: See figures 1 through 5.
Connector mating: This connector mates with MS3110, MS3112 through MS3115, MS3119, MS3120, MS3122, MS3124, MS3127 and MS3128.
Intermateability dimensions are in accordance with MIL-DTL-26482.
For insert arrangement: See MIL-STD-1669.

Part or Identifying Number (PIN) example:

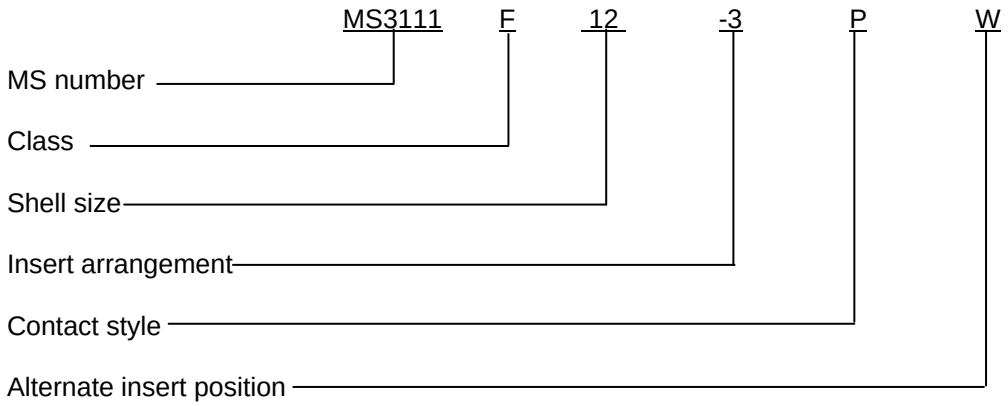

Changes from previous issue. Marginal notations are not used in this revision to identify changes with respect to the previous issue due to the extent of the changes.

Referenced documents. In addition to MIL-DTL-26482, this document references the following:

MS3110
MS3112
MS3113
MS3114
MS3115
MS3119
MS3120
MS3122
MS3124
MS3127
MS3128
MS3420
MS3476
MIL-STD-1669
AN936
ASME Y14.5M
NASM 35338

Downloaded from http://www.everyspec.com

CONCLUDING MATERIAL

Custodians:
Army - CR
Navy - AS
Air Force - 11
DLA - CC

Review activities:
Army - AV
Navy - EC, SH

Preparing activity:
DLA - CC

(Project 5935-4656-002)

NOTE: The activities listed above were interested in this document as of the date of this document. Since organizations and responsibilities can change, you should verify the currency of the information above using the ASSIST Online database at http://assist.daps.dla.mil.