Downloaded from http://www.everyspec.com

THE REQUIREMENTS FOR ACQUIRING THE PRODUCT(S) DESCRIBED HEREIN SHALL CONSIST OF THIS SPECIFICATION SHEET AND THE ISSUE OF THE FOLLOWING SPECIFICATION LISTED IN THAT ISSUE OF THE DODISS SPECIFIED IN THE SOLICITATION: MIL-C-5015

Form approved
OMB No. 0704-0188

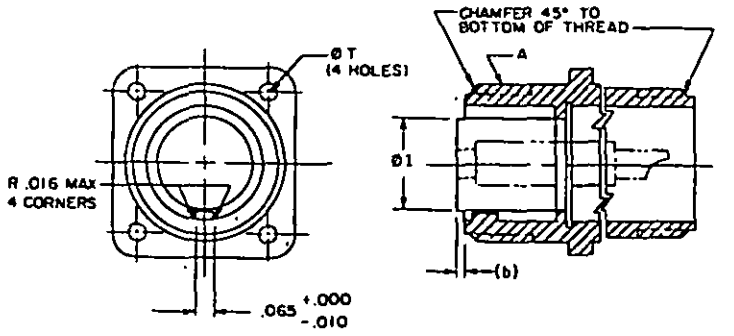

STYLE S (SOCKET INSERT)

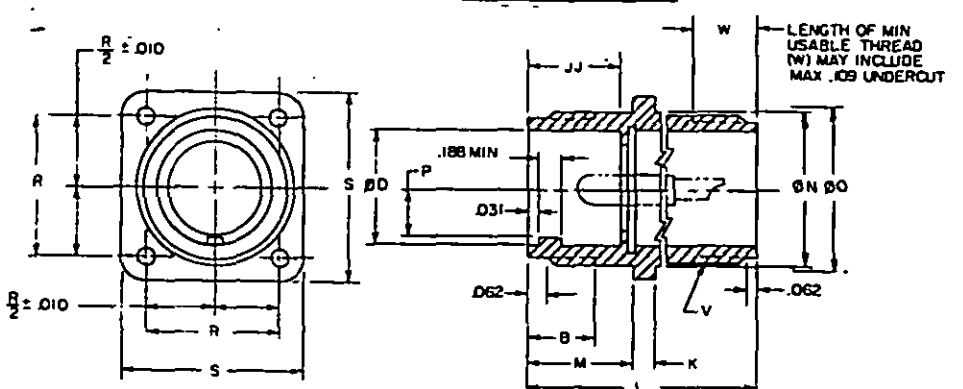

STYLE P (PIN INSERT)

CLASS A - SOLID SHELL / CLASS C - PRESSURIZED

SIZE	A COUPLING THREAD	B MIN USABLE THREAD	D +.015 -.000 Ø INSIDE	Ø1 MAX INSERT	(c) JJ +.031 -.000 INSERT LOCATION	K THICKNESS MOUNTING FLANGE MAX	K THICKNESS MOUNTING FLANGE MIN	L MAX OVERALL LENGTH	M +.031/ -.000 MOUNTING FLANGE LOCATION	N MAX Ø OUTSIDE	ØO (ref) MOUNTING HOLE	P +.015 -.000 KEY HEIGHT	R +.005 ℄-℄ MOUNTING HOLES	S +.031 LENGTH SIDE	ØT +.010/ -.005 MOUNTING BOLT HOLE	V THREAD	W MIN USABLE THREAD	FOR INSERT ARRANGEMENT SEE DRAWING
8S	1/2-28		.370	.250				1.469		.532	.562	.130	.594	.875				
10S	5/8-24	.375	.448	.320	.562			1.531	.562	.656	.688	.165	.719	1.000		1/2-28		
10SL				.448						.782	.812					5/8-24		
12S	3/4-20		.557					1.688				.224	.812	1.094				
12		.625			.750	.156	.062	2.062	.750									
14S	7/8-20	.375	.682	.525	.562			1.688	.562	.906	.938	.263	.906	1.188	.120	3/4-20	.375	
14		.625			.750			2.062	.750									
16S	1 -20	.375	.807	.650	.562			1.688	.562	1.032	1.062	.325	.969	1.281		7/8-20		
16								2.062	.750									
18	1-1/8-18		.932	.770						1.156	1.188	.385	1.062	1.375		1 -20		MIL-STD-1651
20	1-1/4-18		1.058	.925	.750			2.188		1.282	1.312	.463	1.156	1.500		1-3/16-18		
22	1-3/8-18		1.182	1.020		.203	.094			1.406	1.438	.510	1.250	1.625				
24	1-1/2-18	.625	1.307	1.145				2.312	.812	1.532	1.562	.573	1.375	1.750	.147	1-7/16-18		
28	1-3/4-18		1.526	1.365						1.782	1.812	.883	1.562	2.000				
32	2 -18		1.776	1.615				2.438		2.032	2.062	.808	1.750	2.250		1-3/4-18	.438	
36	2-1/4-16		1.995	1.830						2.282	2.312	.915	1.938	2.500		2 -18	.500	
40	2-1/2-16		2.245	2.045		.359	.125		.875	2.532	2.562	1.023	2.188	2.750	.173	2-1/4-16		
44	2-3/4-16		2.495	2.300				2.562		2.782	2.812	1.150	2.375	3.000		2-1/2-16	.562	
48	3 -16		2.745	2.550						3.032	3.062	1.275	2.625	3.250		3 -16	.625	

PREPARING ACTIVITY: NAVY-AS
CUSTODIANS: ARMY-CR NAVY-AS
AIR FORCE-85 NASA-NA
REVIEW: ARMY-MI, AV, ME, NAVY-SH, EC, AF-99
USER: ARMY-AT, NAVY-OS, MC, CG
PROJECT NUMBER: 5935-3887

MILITARY SPECIFICATION SHEET

TITLE CONNECTOR, RECEPTACLE, ELECTRIC, WALL MOUNTING, SOLDER CONTACTS, AN TYPE

SPECIFICATION SHEET NUMBER MS3100 — 20 AUG 92 REV F

SUPERSEDING MS3100 E — 31 AUG 90

AMSC- N/A — FSC 5935

DISTRIBUTION STATEMENT A. Approved for public release; distribution is unlimited.

THIS SPECIFICATION IS APPROVED FOR USE BY ALL DEPARTMENTS AND AGENCIES OF THE DEPARTMENT OF DEFENSE.

Downloaded from http://www.everyspec.com

THE REQUIREMENTS FOR ACQUIRING THE PRODUCT(S) DESCRIBED HEREIN SHALL CONSIST OF THIS SPECIFICATION SHEET AND THE ISSUE OF THE FOLLOWING SPECIFICATION LISTED IN THAT ISSUE OF THE DODISS SPECIFIED IN THE SOLICITATION: MIL-C-5015

Form approved
OMB No. 0704-0188

NOTES:

(F)

(a) SIZES 8S THRU 40 OF CLASSES A AND C ARE CANCELLED AFTER 1 JAN 1991. FOR REPLACEMENT PURPOSES USE CLASS F FOR SADDLE CLAMP WITH GROMMET SEAL OR CLASS R FOR GROMMET SEAL WITHOUT SADDLE CLAMP. MANUFACTURERS MAY CONTINUE TO SUPPLY THESE SIZES OF CLASSES A AND C UNTIL 1 JAN 1992 OR EXHAUST THEIR INVENTORIES, WHICHEVER COMES FIRST. FOR NEW DESIGN USE MS3450W WITH THE APPROPRIATE M85049/31 BACKSHELL. FOR SHIPBOARD JACKETED CABLES USE MS3400.
(b) SIZES 44 AND 48 OF CLASSES A AND C ARE INACTIVE FOR NEW DESIGN AFTER 17 DECEMBER 1958.
(c) WHERE RESILIENT INSERTS ARE USED, JJ MAY BE .109 LESS THAN THAT INDICATED.
(d) SOCKET INSERT OF HARD MATERIAL SHALL EXTEND .016 MAXIMUM BEYOND OR .032 MAXIMUM BELOW SHELL. SOCKET INSERT OF RESILIENT MATERIAL SHALL EXTEND .047 +.000 -.047 BEYOND SHELL AS SHOWN.
(e) CONNECTORS MS3100A (OR C) REPLACE AND ARE INTERCHANGEABLE WITH CORRESPONDING AN3100A (OR C) CONNECTORS.

EXAMPLE OF PART NUMBER: MS3100A18-5SY

MS SHELL DRAWING NO. — CLASS (A OR C) — SIZE — INSERT ARRANGEMENT NUMBER — STYLE (P OR S) — ALTERNATE INSERT POSITION (W, X, Y OR Z). LEAVE BLANK FOR NORMAL POSITION

DIMENSIONS IN INCHES. UNLESS OTHERWISE SPECIFIED, TOLERANCES: DECIMALS ±.016. THIS SPECIFICATION SHEET TAKES PRECEDENCE OVER DOCUMENTS REFERENCED HEREIN. REFERENCED DOCUMENTS SHALL BE OF THE ISSUE IN EFFECT ON DATE OF INVITATIONS FOR BID.

CERTAIN PROVISIONS OF THIS SPECIFICATION SHEET ARE THE SUBJECT OF INTERNATIONAL STANDARDIZATION AGREEMENTS NATO STANAG 3372, NEPR 28. WHEN AMENDMENT, REVISION, OR CANCELLATION OF THIS SPECIFICATION SHEET IS PROPOSED WHICH WILL MODIFY THE INTERNATIONAL AGREEMENT CONCERNED, THE PREPARING ACTIVITY WILL TAKE APPROPRIATE ACTION THROUGH INTERNATIONAL STANDARDIZATION CHANNELS INCLUDING DEPARTMENTAL STANDARDIZATION OFFICES TO CHANGE THE AGREEMENT OR MAKE OTHER APPROPRIATE ACCOMODATIONS.

(F) DENOTES CHANGE

THIS SPECIFICATION IS APPROVED FOR USE BY ALL DEPARTMENTS AND AGENCIES OF THE DEPARTMENT OF DEFENSE.

Downloaded from http://www.everyspec.com

THE REQUIREMENTS FOR ACQUIRING THE PRODUCT(S) DESCRIBED HEREIN SHALL CONSIST OF THIS SPECIFICATION SHEET AND THE ISSUE OF THE FOLLOWING SPECIFICATION LISTED IN THAT ISSUE OF THE DODISS SPECIFIED IN THE SOLICITATION: MIL-C-5015

Form approved
OMB No. 0704-0188

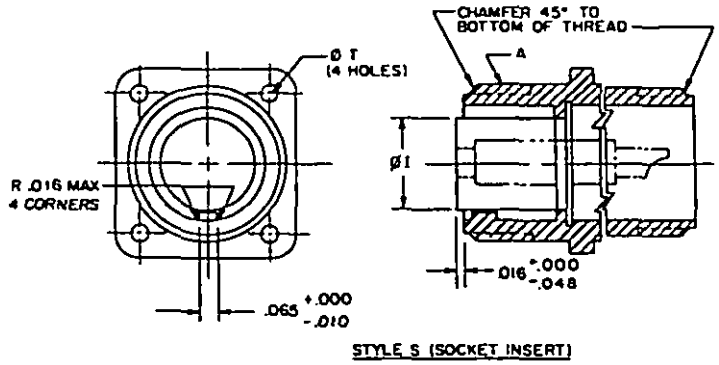

STYLE S (SOCKET INSERT)

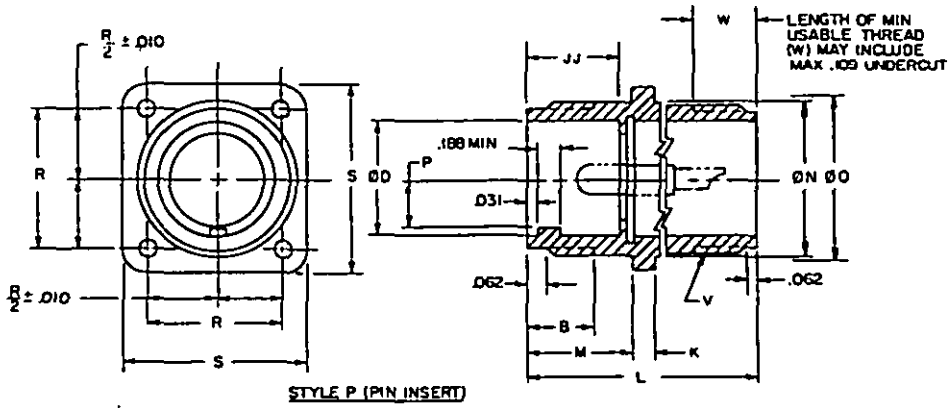

STYLE P (PIN INSERT)

CLASS K – FIREWALL

SIZE	A COUPLING THREAD	B MIN USABLE THREAD	D +.015 -.000 Ø INSIDE	BI MAX INSERT	JJ +.031 -.000 INSERT LOCATION	K MIN THICKNESS MOUNTING FLANGE	L MAX OVERALL LENGTH	M +.031/-.000 MOUNTING FLANGE LOCATION	N MAX Ø OUTSIDE	ØO (ref) MOUNTING HOLE	P +.015 -.000 KEY HEIGHT	R +.005 -.000 CL-CL MOUNTING HOLES	S +.031 LENGTH SIDE	ØT +.010/ -.005 MOUNTING BOLT HOLE	V THREAD	W MIN USABLE THREAD	FOR INSERT ARRANGEMENT SEE
8S	1/2-28		.370	.250					.532	.562	.130	.594	.875				
10S	5/8-24	.375	.448	.320	.562		2.188	.562	.656	.688	.165	.719	1.000		1/2-28		
10SL																	
12S	3/4-20		.557	.448					.782	.812					5/8-24		
12		.625			.750	.062	2.875	.750			.224	.812	1.094	.150			
14S		.375			.562		2.188	.562									
14	7/8-20	.625	.682	.525	.750		2.875	.750	.906	.938	.263	.906	1.188		3/4-20	.375	MIL-STD-1651
16S		.375			.562		2.188	.562									
16	1 -20		.807	.650					1.032	1.062	.325	.969	1.281		7/8-20		
18	1-1/8-18		.932	.770			2.875	.750	1.156	1.188	.385	1.062	1.375		1 -20		
20	1-1/4-18		1.058	.925					1.344	1.375	.463	1.156	1.500		1-3/16-18		
22	1-3/8-18	.625	1.182	1.020	.750				1.406	1.438	.510	1.250	1.625				
24	1-1/2-18		1.307	1.145		.078		.812	1.625	1.688	.573	1.375	1.750	.177			
28	1-3/4-18		1.526	1.365			3.125		1.782	1.812	.683	1.562	2.000		1-7/16-18		
32	2 -18		1.776	1.615					2.032	2.062	.808	1.750	2.250		1-3/4-18	.438	
36	2-1/4-16		1.995	1.830		.125		.875	2.282	2.312	.915	1.938	2.500	.209	2 -18	.500	
40	2-1/2-16		2.245	2.045					2.532	2.562	1.023	2.188	2.750		2-1/4-16		

PREPARING ACTIVITY: NAVY-AS
CUSTODIANS: ARMY-CR NAVY-AS
AIR FORCE-85 NASA-NA
REVIEW: ARMY-MI, AV, ME, NAVY-SH, EC, AF-99
USER: ARMY-AT, NAVY-OS, MC, CG
PROJECT NUMBER: 5935-3887

MILITARY SPECIFICATION SHEET

TITLE CONNECTOR, RECEPTACLE, ELECTRIC, WALL MOUNTING, SOLDER CONTACTS, AN TYPE

SPECIFICATION SHEET NUMBER MS3100 — 20 AUG 92 REV F

SUPERSEDING MS3100 E — 31 AUG 90

AMSC- N/A — FSC 5935

DISTRIBUTION STATEMENT A. Approved for public release; distribution is unlimited.

THIS SPECIFICATION IS APPROVED FOR USE BY ALL DEPARTMENTS AND AGENCIES OF THE DEPARTMENT OF DEFENSE.

Downloaded from http://www.everyspec.com

THE REQUIREMENTS FOR ACQUIRING THE PRODUCT(S) DESCRIBED HEREIN SHALL CONSIST OF THIS SPECIFICATION SHEET AND THE ISSUE OF THE FOLLOWING SPECIFICATION LISTED IN THAT ISSUE OF THE DODISS SPECIFIED IN THE SOLICITATION: MIL - C - 5015

Form approved
OMB No. 0704-0188

NOTES:

(F) (a) CLASS K IS INACTIVE FOR NEW DESIGN AFTER 1 JAN 1991. USE MS3450K WITH THE APPROPRIATE M85049/31 BACKSHELL FOR NEW DESIGN. FOR SHIPBOARD JACKETED CABLES USE MS3400.
(b) CONNECTORS MS3100K REPLACE AND ARE INTERCHANGEABLE WITH CORRESPONDING AN3100K CONNECTORS.

EXAMPLE OF PART NUMBER: MS3100K18-5SY

MS SHELL DRAWING NO. — CLASS — SIZE — INSERT ARRANGEMENT NUMBER — STYLE (P OR S) — ALTERNATE INSERT POSITION (W, X, Y OR Z). LEAVE BLANK FOR NORMAL POSITION

DIMENSIONS IN INCHES. UNLESS OTHERWISE SPECIFIED, TOLERANCES: DECIMALS ±.016.
FOR DESIGN FEATURE PURPOSES, THIS SPECIFICATION SHEET TAKES PRECEDENCE OVER DOCUMENTS REFERENCED HEREIN.
REFERENCED DOCUMENTS SHALL BE OF THE ISSUE IN EFFECT ON DATE OF INVITATIONS FOR BID.

(F) DENOTES CHANGE

PREPARING ACTIVITY: NAVY-AS CUSTODIANS: ARMY-CR NAVY-AS AIR FORCE-85 NASA-NA REVIEW: ARMY-MI, AV, ME, NAVY-SH, EC, AF-99 USER: ARMY-AT, NAVY-OS, MC, CG PROJECT NUMBER: 5935-3887	MILITARY SPECIFICATION SHEET TITLE CONNECTOR, RECEPTACLE, ELECTRIC, WALL MOUNTING, SOLDER CONTACTS, AN TYPE	SPECIFICATION SHEET NUMBER MS3100 20 AUG 92 REV F SUPERSEDING MS3100 E 31 AUG 90 AMSC- N/A FSC 5935

DISTRIBUTION STATEMENT A. Approved for public release; distribution is unlimited.

THIS SPECIFICATION IS APPROVED FOR USE BY ALL DEPARTMENTS AND AGENCIES OF THE DEPARTMENT OF DEFENSE.

Downloaded from http://www.everyspec.com

Form approved
OMB No. 0704-0188

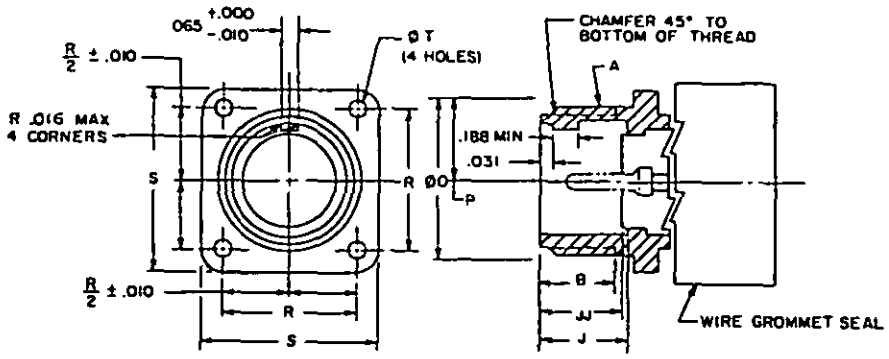

STYLE P (PIN INSERT)

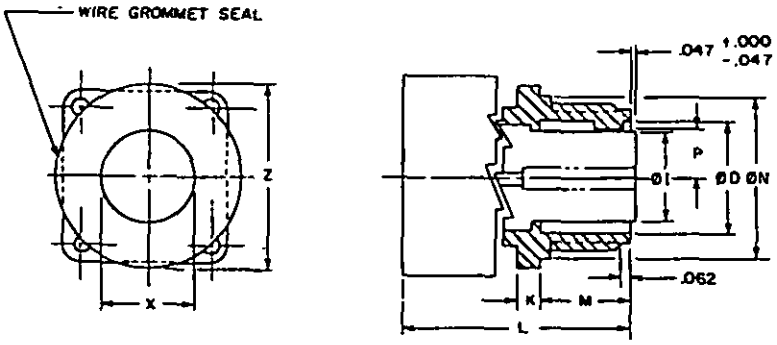

STYLE S (SOCKET INSERT)

CLASS E - ENVIRONMENT RESISTANT

SIZE	A COUPLING THREAD	B MIN USABLE THREAD	D +.015 -.000 Ø INSIDE	ØI MAX INSERT	J +.031 -.000 INT SHELL SHLDR	JJ ±.031 INSERT LOCATION	K THICKNESS MOUNTING FLANGE MAX	K THICKNESS MOUNTING FLANGE MIN	L (b) MAX OVER-ALL LENGTH	M +.031 -.000 MTG FLANGE LOCATION	N MAX Ø OUTSIDE	ØO (ref) MOUNTING HOLE	P +.015 -.000 KEY HEIGHT	R +.005 CL-CL MTG HOLES	S +.031 LENGTH SIDE	ØT +.010 -.005 MTG HOLES	X MIN CABLE CLEARANCE	Z MAX ACROSS CABLE ADAPTER ASSY	FOR INSERT ARRANGEMENT SEE
8S	1/2-28		.370	.250							.532	.562	.130	.594	.875				
10S	5/8-24	.375	.448	.320	.562	.484			2.250	.562	.656	.688	.165	.719	1.000		.172	1.046	
10SL																			
12S	3/4-20		.557	.448							.782	.812	.224	.812	1.094		.281	1.125	
12		.425			.750	.672	.156	.078	2.625	.750									MIL-STD-1651
14S	7/8-20	.375	.682	.525	.562	.484			2.250	.562	.906	.938	.263	.906	1.188	.120	.406	1.343	
14		.625			.750	.672			2.625	.750									
16S	1 -20	.375	.807	.650	.562	.484			2.250	.562	1.032	1.062	.325	.969	1.281		.500	1.484	
16									2.625										
18	1-1/8-18		.932	.770					2.688	.750	1.156	1.188	.385	1.062	1.375		.531	1.609	
20	1-1/4-18		1.058	.925					2.750		1.282	1.312	.463	1.156	1.500		.656	1.890	
22	1-3/8-18		1.182	1.020	.750	.672	.203	.094			1.406	1.438	.510	1.250	1.625		.750		
24	1-1/2-18	.625	1.307	1.145					2.969	.812	1.532	1.562	.573	1.375	1.750	.147	.781	2.170	
28	1-3/4-18		1.526	1.365					3.031		1.782	1.812	.683	1.562	2.000		.922		
32	2 -18		1.776	1.615						.875	2.032	2.062	.808	1.750	2.250		1.156	2.656	
36	2-1/4-16		1.995	1.830			.359	.125	3.281		2.282	2.312	.915	1.838	2.500	.173	1.250	2.922	
40	2-1/2-16		2.245	2.045					3.500		2.532	2.562	1.023	2.188	2.750		1.562	3.531	

PREPARING ACTIVITY: NAVY-AS
CUSTODIANS: ARMY-CR NAVY-AS
AIR FORCE-85 NASA-NA
REVIEW: ARMY-MI, AV, ME, NAVY-SH, EC, AF-99
USER: ARMY-AT, NAVY-OS, MC, CG
PROJECT NUMBER: 5935-3887

MILITARY SPECIFICATION SHEET

TITLE CONNECTOR, RECEPTACLE, ELECTRIC, WALL MOUNTING, SOLDER CONTACTS, AN TYPE

SPECIFICATION SHEET NUMBER MS3100 20 AUG 92 REV F

SUPERSEDING MS3100 E 31 AUG 90

AMSC- N/A FSC 5935

DISTRIBUTION STATEMENT A. Approved for public release; distribution is unlimited.

DD FORM 672 MAY 1988 PREVIOUS EDITIONS OF THIS FORM ARE OBSOLETE

THE REQUIREMENTS FOR ACQUIRING THE PRODUCT(S) DESCRIBED HEREIN SHALL CONSIST OF THIS SPECIFICATION SHEET AND THE ISSUE OF THE FOLLOWING SPECIFICATION LISTED IN THAT ISSUE OF THE DODISS SPECIFIED IN THE SOLICITATION: MIL-C-5015

THIS SPECIFICATION IS APPROVED FOR USE BY ALL DEPARTMENTS AND AGENCIES OF THE DEPARTMENT OF DEFENSE.

Downloaded from http://www.everyspec.com

THE REQUIREMENTS FOR ACQUIRING THE PRODUCT(S) DESCRIBED HEREIN SHALL CONSIST OF THIS SPECIFICATION SHEET AND THE ISSUE OF THE FOLLOWING SPECIFICATION LISTED IN THAT ISSUE OF THE DODISS SPECIFIED IN THE SOLICITATION: MIL-C-5015

Form approved
OMB No. 0704-0188

NOTES:

(F) (a) CLASS E IS CANCELLED AFTER 1 JAN 1991. USE MS3100R AS A REPLACEMENT FOR MS3100E WITHOUT SADDLE CLAMP OR MS3100F FOR CLASS E WITH SADDLE CLAMP. MANUFACTURERS MAY CONTINUE TO SUPPLY CLASS E UNTIL 1 JAN 1992 OR EXHAUST THEIR INVENTORIES, WHICHEVER COMES FIRST. FOR NEW DESIGN USE MS3450W WITH THE APPROPRIATE M85049/31 BACKSHELL. FOR SHIPBOARD JACKETED CABLES USE MS3400.

(b) ADD .375 FOR SIZE "0" CONTACTS.

(c) MS3100E REPLACE AND ARE INTERCHANGEABLE WITH CORRESPONDING AN3100G CONNECTORS.

EXAMPLE OF PART NUMBER: MS3100E18-5SY

MS SHELL DRAWING NO. — CLASS — SIZE — INSERT ARRANGEMENT NUMBER — STYLE (P OR S) — ALTERNATE INSERT POSITION (W, X, Y OR Z). LEAVE BLANK FOR NORMAL POSITION

DIMENSIONS IN INCHES. UNLESS OTHERWISE SPECIFIED, TOLERANCES: DECIMALS ±.016.
THIS SPECIFICATION SHEET TAKES PRECEDENCE OVER DOCUMENTS REFERENCED HEREIN.
REFERENCED DOCUMENTS SHALL BE OF THE ISSUE IN EFFECT ON DATE OF INVITATIONS FOR BID.

(F) DENOTES CHANGE

THIS SPECIFICATION IS APPROVED FOR USE BY ALL DEPARTMENTS AND AGENCIES OF THE DEPARTMENT OF DEFENSE.

PREPARING ACTIVITY: NAVY-AS CUSTODIANS: ARMY-CR NAVY-AS AIR FORCE-85 NASA-NA REVIEW: ARMY-MI, AV, ME, NAVY-SH, EC, AF-99 USER: ARMY-AT, NAVY-OS, MC, CG PROJECT NUMBER: 5935-3887	MILITARY SPECIFICATION SHEET TITLE CONNECTOR, RECEPTACLE, ELECTRIC, WALL MOUNTING, SOLDER CONTACTS, AN TYPE	SPECIFICATION SHEET NUMBER MS3100 20 AUG 92 REV F SUPERSEDING MS3100 E 31 AUG 90 AMSC- N/A FSC 5935

DISTRIBUTION STATEMENT A. Approved for public release; distribution is unlimited.

DD FORM 672 MAY 1988 PREVIOUS EDITIONS OF THIS FORM ARE OBSOLETE

Downloaded from http://www.everyspec.com

Form approved
OMB No. 0704-0188

THE REQUIREMENTS FOR ACQUIRING THE PRODUCT(S) DESCRIBED HEREIN SHALL CONSIST OF THIS SPECIFICATION SHEET AND THE ISSUE OF THE FOLLOWING SPECIFICATION LISTED IN THAT ISSUE OF THE DODISS SPECIFIED IN THE SOLICITATION: MIL-C-5015

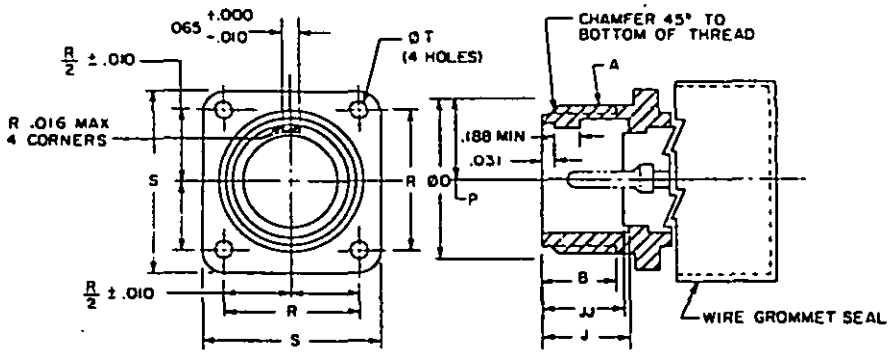

STYLE P (PIN INSERT)

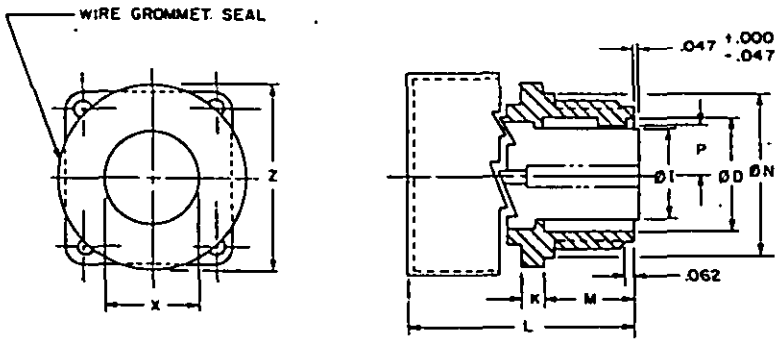

STYLE S (SOCKET INSERT)

CLASS R – ENVIRONMENT RESISTANT

SIZE	A COUPLING THREAD	B MIN USABLE THREAD	D +.015 -.000 Ø INSIDE	ØE MAX INSERT	J +.031 -.000 INT SHELL SHLDR	JJ +.031 INSERT LOCATION	K THICKNESS MOUNTING FLANGE MAX	K THICKNESS MOUNTING FLANGE MIN	L (a) MAX OVER-ALL LENGTH	M +.031 -.000 MTG FLANGE LOCATION	N MAX Ø OUTSIDE	ØO (ref) MOUNTING HOLE	P +.015 -.000 KEY HEIGHT	R +.005 CL-CL MTG HOLES	S +.031 LENGTH SIDE	ØT +.010 -.005 MTG HOLES	Z MIN CABLE CLEARANCE	Z MAX ACROSS SEAL ASSY	FOR INSERT ARRANGEMENT SEE
8S	1/2-28		.370	.250							.532	.562	.130	.594	.875		.172	1.046	
10S	5/8-24	.375	.448	.320	.562	.484			1.838	.562	.656	.688	.165	.719	1.000				
10SL																			
12S																			
12	3/4-20	.625	.557	.448	.750	.672	.156	.076	2.181	.750	.782	.812	.224	.812	1.094		.281	1.125	MIL-STD-1651
14S	7/8-20	.375	.682	.525	.562	.484			1.838	.562	.906	.938	.263	.906	1.188	.120	.406	1.343	
14		.625			.750	.672			2.181	.750									
16S		.375			.562	.484			1.838	.562									
16	1 -20		.807	.650					2.181		1.032	1.062	.325	.969	1.281		.500	1.484	
18	1-1/8-18		.932	.770						.750	1.156	1.188	.385	1.062	1.375		.531	1.609	
20	1-1/4-18		1.058	.925							1.282	1.312	.463	1.156	1.500		.656	1.890	
22	1-3/8-18		1.182	1.020	.750	.672	.203	.094	2.281		1.406	1.438	.510	1.250	1.625		.750		
24	1-1/2-15	.625	1.307	1.145						.812	1.532	1.562	.573	1.375	1.750	.147	.781	2.170	
28	1-3/4-19		1.526	1.365							1.782	1.812	.683	1.562	2.000		.922		
32	2 -18		1.776	1.615							2.032	2.062	.808	1.750	2.250		1.156	2.656	
36	2-1/4-16		1.995	1.930			.359	.125	2.322	.875	2.282	2.312	.915	1.938	2.500	.173	1.250	2.922	
40	2-1/2-16		2.245	2.045							2.532	2.562	1.023	2.188	2.750		1.562	3.328	

PREPARING ACTIVITY: NAVY-AS
CUSTODIANS: ARMY-CR NAVY-AS
AIR FORCE-85 NASA-NA
REVIEW: ARMY-MI, AV, ME, NAVY-SH, EC, AF-99
USER: ARMY-AT, NAVY-OS, MC, CG
PROJECT NUMBER: 5935-3887

MILITARY SPECIFICATION SHEET

TITLE CONNECTOR, RECEPTACLE, ELECTRIC, WALL MOUNTING, SOLDER CONTACTS, AN TYPE

SPECIFICATION SHEET NUMBER
MS3100 20 AUG 92 REV F

SUPERSEDING
MS3100 E 31 AUG 90

AMSC- N/A FSC 5935

DISTRIBUTION STATEMENT A. Approved for public release; distribution is unlimited.

THIS SPECIFICATION IS APPROVED FOR USE BY ALL DEPARTMENTS AND AGENCIES OF THE DEPARTMENT OF DEFENSE.

Downloaded from http://www.everyspec.com

THE REQUIREMENTS FOR ACQUIRING THE PRODUCT(S) DESCRIBED HEREIN SHALL CONSIST OF THIS SPECIFICATION SHEET AND THE ISSUE OF THE FOLLOWING SPECIFICATION LISTED IN THAT ISSUE OF THE DODISS SPECIFIED IN THE SOLICITATION: MIL-C-5015

Form approved
OMB No. 0704-0188

NOTES:

(F) (a) CLASS R IS INACTIVE FOR NEW DESIGN AFTER 1 JAN 1991. FOR NEW DESIGN USE MS3450W WITH APPROPRIATE M85049/31 BACKSHELL. FOR SHIPBOARD JACKETED CABLES USE MS3400.

(b) ADD .375 FOR SIZE "0" CONTACTS.

(c) MS3100R CONNECTORS REPLACE AND ARE INTERCHANGEABLE WITH CORRESPONDING MS3100C AND AN3100E CONNECTORS WITH SADDLE TYPE CABLE CLAMP.

EXAMPLE OF PART NUMBER: MS3100R18-5SY

MS SHELL DRAWING NO.	CLASS	SIZE	INSERT ARRANGEMENT NUMBER	STYLE (P OR S)	ALTERNATE INSERT POSITION (W, X, Y OR Z). LEAVE BLANK FOR NORMAL POSITION
MS3100	R	18	5	S	Y

DIMENSIONS IN INCHES. UNLESS OTHERWISE SPECIFIED, TOLERANCES: DECIMALS ±.016.
THIS SPECIFICATION SHEET TAKES PRECEDENCE OVER DOCUMENTS REFERENCED HEREIN.
REFERENCED DOCUMENTS SHALL BE OF THE ISSUE IN EFFECT ON DATE OF INVITATIONS FOR BID.

(F) DENOTES CHANGE

PREPARING ACTIVITY: NAVY-AS CUSTODIANS: ARMY-CR NAVY-AS AIR FORCE-85 NASA-NA REVIEW: ARMY-MI, AV, ME, NAVY-SH, EC, AF-99 USER: ARMY-AT, NAVY-OS, MC, CG PROJECT NUMBER: 5935-3887	MILITARY SPECIFICATION SHEET TITLE CONNECTOR, RECEPTACLE, ELECTRIC, WALL MOUNTING, SOLDER CONTACTS, AN TYPE	SPECIFICATION SHEET NUMBER MS3100 20 AUG 92 REV F SUPERSEDING MS3100 E 31 AUG 90 AMSC- N/A FSC 5935

DISTRIBUTION STATEMENT A. Approved for public release; distribution is unlimited.

THIS SPECIFICATION IS APPROVED FOR USE BY ALL DEPARTMENTS AND AGENCIES OF THE DEPARTMENT OF DEFENSE.

Downloaded from http://www.everyspec.com

THE REQUIREMENTS FOR ACQUIRING THE PRODUCT(S) DESCRIBED HEREIN SHALL CONSIST OF THIS SPECIFICATION SHEET AND THE ISSUE OF THE FOLLOWING SPECIFICATION LISTED IN THAT ISSUE OF THE DODISS SPECIFIED IN THE SOLICITATION: MIL-C-5015

Form approved
OMB No. 0704-0188

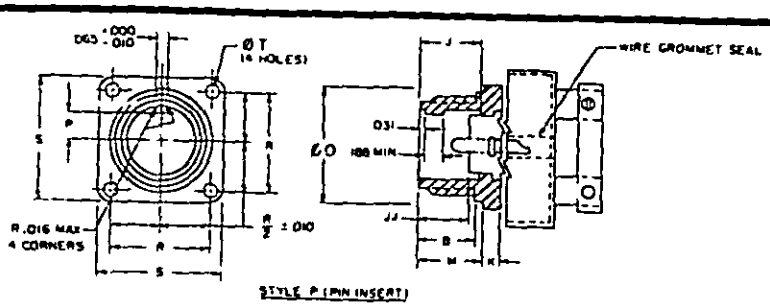

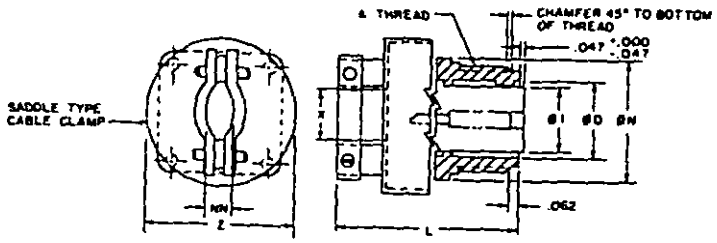

CLASS F – ENVIRONMENT RESISTANT

SIZE	A COUPLING THREAD	B MIN USABLE THREAD	D +.015 -.000 Ø INSIDE	ØI MAX INSERT	J +.031 -.000 INT SHELL SHLDR	JJ +.031 INSERT LOCATION	K THICKNESS MOUNTING FLANGE MAX	K THICKNESS MOUNTING FLANGE MIN	L (b) MAX OVER-ALL LENGTH	M +.031 -.000 MTG FLANGE LOCATION	N MAX Ø OUTSIDE	ØO (ref) MOUNTING HOLE	P +.015 -.000 KEY HEIGHT	R +.005 CL-CL MTG HOLES	S +.031 LENGTH SIDE	NN MAX CLOSED	X MIN CABLE CLEARANCE	Z MAX ACROSS CLAMP	ØT +.010 -.005 MTG HOLES	FOR INSERT ARRANGEMENT SEE
8S	1/2-28		.370	.250							.532	.562	.130	.594	.875					
10S	5/8-24			.320							.656	.688	.165	.719	1.000		.172	1.046		
10SL		.375	.448	.448	.562	.484			2.250	.562						.200				
12S	3/4-20		.557								.782	.812	.224	.812	1.094		.281	1.125		
12		.625			.750	.672	.156	.078	2.625	.750										MIL-STD-1651
14S		.375			.562	.484			2.250	.562										
14	7/8-20	.625	.682	.525	.750	.672			2.625	.750	.906	.938	.263	.906	1.188	.312	.406	1.343	.120	
16S		.375			.562	.484			2.250	.562										
16	1 -20		.807	.650					2.625		1.032	1.062	.325	.969	1.281	.360	.500	1.484		
18	1-1/8-18		.932	.770					2.688	.750	1.156	1.188	.385	1.062	1.375	.422	.531	1.609		
20	1-1/4-18		1.058	.925							1.282	1.312	.463	1.156	1.500		.656			
22	1-3/8-18	.625	1.182	1.020			.203	.094	2.750		1.406	1.438	.510	1.250	1.625	.531	.740	1.890		
24	1-1/2-18		1.307	1.145	.750	.672			2.969		1.532	1.562	.573	1.375	1.750		.781		.147	
28	1-3/4-18		1.526	1.365			.359	.125	3.031	.812	1.782	1.812	.683	1.562	2.000	.594	.922	2.170		
32	2 -18		1.776	1.615						.875	2.032	2.062	.808	1.750	2.250	.790	1.156	2.656		
36	2-1/4-16		1.995	1.830					3.281		2.282	2.312	.915	1.938	2.500		1.250	2.922	.173	
40	2-1/2-16		2.245	2.045					3.500		2.532	2.562	1.023	2.188	2.750	1.100	1.562	3.531		

NOTES:

(F) (a) CLASS F IS INACTIVE FOR NEW DESIGN AFTER 1 JAN 1991. FOR NEW DESIGN USE MS3450W WITH APPROPRIATE M85049/52. FOR SHIPBOARD JACKETED CABLES USE MS3400.
(b) ADD .375 FOR SIZE "0" CONTACTS.
(c) MS3100F CONNECTORS REPLACE AND ARE INTERCHANGEABLE WITH CORRESPONDING MS3100E AND AN3100E CONNECTORS WITH SADDLE TYPE CABLE CLAMP.

EXAMPLE OF PART NUMBER: MS3100F18-5SY

MS SHELL DRAWING NO. — CLASS — SIZE — INSERT ARRANGEMENT NUMBER — STYLE (P OR S) — ALTERNATE INSERT POSITION (W, X, Y OR Z). LEAVE BLANK FOR NORMAL POSITION

DIMENSIONS IN INCHES. UNLESS OTHERWISE SPECIFIED, TOLERANCES: DECIMALS ±.016.
THIS SPECIFICATION SHEET TAKES PRECEDENCE OVER DOCUMENTS REFERENCED HEREIN.
REFERENCED DOCUMENTS SHALL BE OF THE ISSUE IN EFFECT ON DATE OF INVITATIONS FOR BID.

THIS SPECIFICATION IS APPROVED FOR USE BY ALL DEPARTMENTS AND AGENCIES OF THE DEPARTMENT OF DEFENSE.

PREPARING ACTIVITY: NAVY-AS CUSTODIANS: ARMY-CR NAVY-AS AIR FORCE-85 NASA-NA REVIEW: ARMY-MI, AV, ME, NAVY-SH, EC, AF-99 USER: ARMY-AT, NAVY-OS, MC, CG PROJECT NUMBER: 5935-3887	MILITARY SPECIFICATION SHEET TITLE CONNECTOR, RECEPTACLE, ELECTRIC, WALL MOUNTING, SOLDER CONTACTS, AN TYPE	SPECIFICATION SHEET NUMBER MS3100 20 AUG 92 REV F SUPERSEDING MS3100 E 31 AUG 90 AMSC- N/A FSC 5935

DISTRIBUTION STATEMENT A. Approved for public release; distribution is unlimited.