FED. SUP CLASS.
4820

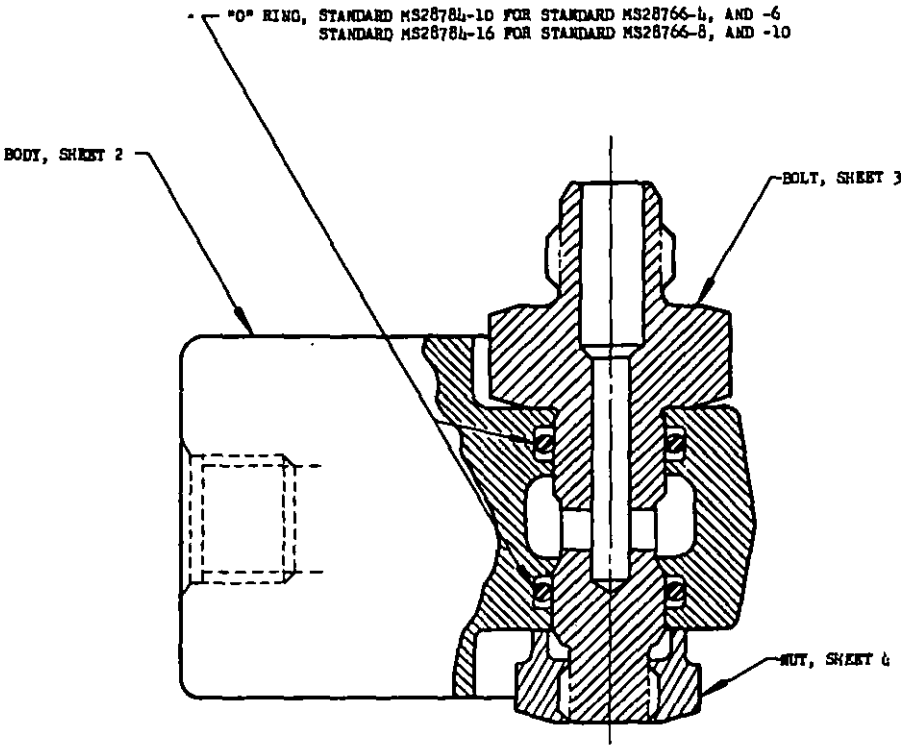

THIS STANDARD TAKES PRECEDENCE OVER DOCUMENTS REFERENCED HEREIN.
REFERENCED DOCUMENTS SHALL BE OF THE ISSUE IN EFFECT ON DATE OF INVITATIONS FOR BID.

THIS DOCUMENT HAS BEEN PROMULGATED BY THE DEPARTMENT OF DEFENSE AS THE MILITARY STANDARD TO LIMIT THE SELECTION OF THE ITEM, PRODUCT, OR DESIGN COVERED HEREIN IN ENGINEERING, DESIGN, AND PROCUREMENT. THIS STANDARD SHALL BECOME EFFECTIVE NOT LATER THAN 90 DAYS AFTER THE LATEST DATE OF APPROVAL SHOWN.

APPROVED 13 Sep 55 REVISED (A) 30 Apr 57

CUSTODIANS	OTHER INT.	MILITARY STANDARD	MS28766 (ASG)
Navy - BuAer Air Force	A - N - AF -	VALVE, SHUTTLE, HYDRAULIC, DIRECT MOUNTING, 3,000 PSI, TYPE II SYSTEMS	
PROCUREMENT SPECIFICATION MIL-V-19068		SUPERSEDES:	SHEET 1 OF 4

PROCUREMENT SPECIFICATION MIL-T-19068

CUSTODIANS Navy - Bureau Air Force

OTHER INT. A - N - AF -

SUPERSEDES:

MILITARY STANDARD

VALVE, SHUTTLE, HYDRAULIC, DIRECT MOUNTING, 3,000 PSI, TYPE II SYSTEMS

MS28766 (ASG)

SHEET 2 OF 4

THIS DOCUMENT HAS BEEN PROMULGATED BY THE DEPARTMENT OF DEFENSE AS THE MILITARY STANDARD TO LIMIT THE SELECTION OF THE ITEM, PRODUCT, OR DESIGN COVERED HEREIN IN ENGINEERING, DESIGN, AND PROCUREMENT. THIS STANDARD SHALL BECOME EFFECTIVE NOT LATER THAN 90 DAYS AFTER THE LATEST DATE OF APPROVAL SHOWN.

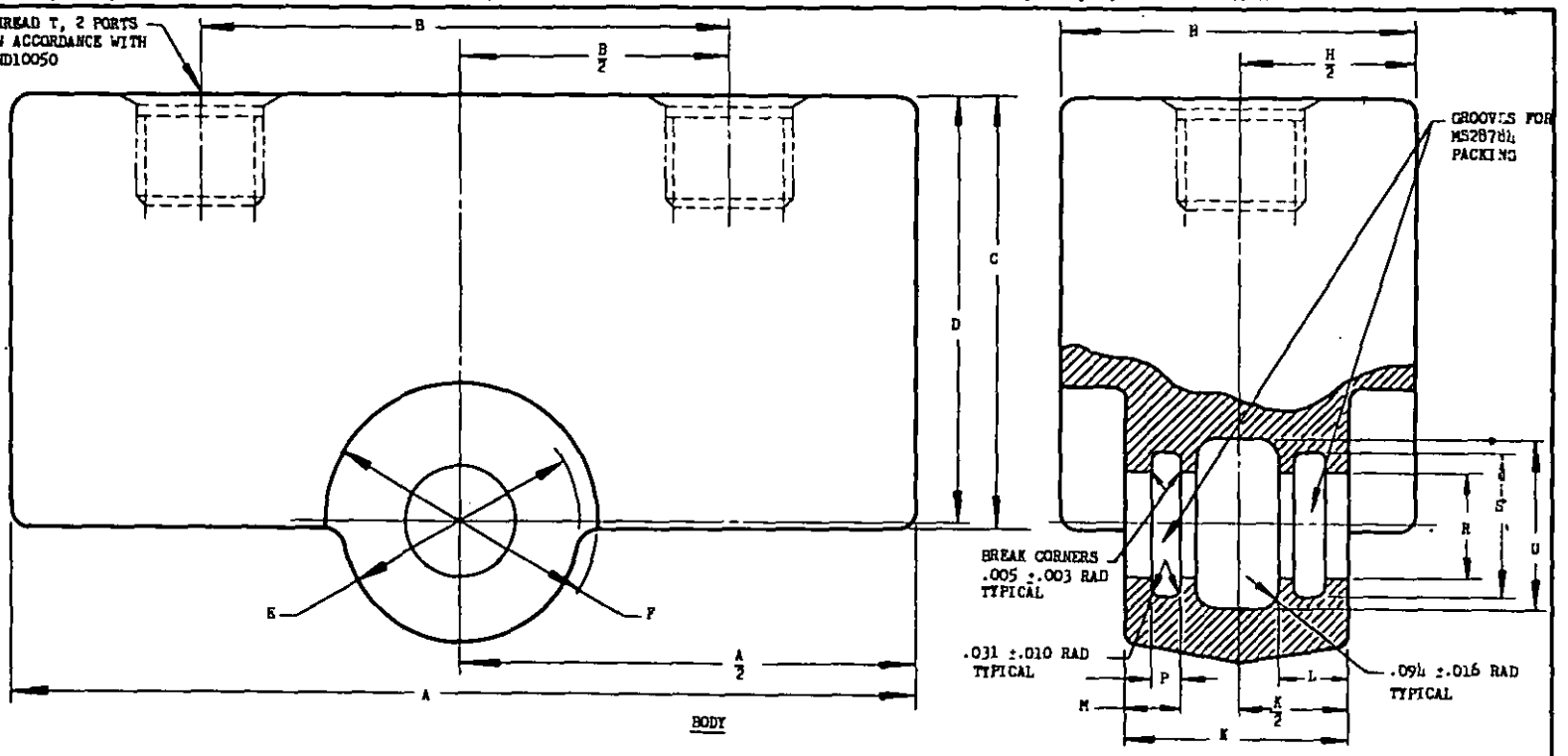

DASH NO.	FIIN	TUBE OD	THREAD T	A MAX	B ±.032	C MAX	D ±.032	E +.188 -.062 DIA	F ±.016 SF DIA	H MAX	K	L ±.010 TYP	M ±.007 TYP	P TYP	R ±.0005 DIA	S ±.004 DIA	U ±.010 DIA	RATED FLOW CAPACITY GPM
-4		1/4	7/16-20 UNF-3B	4.000	2.375	1.812	1.812	1.125	1.188	1.438	1.000	.312	.249	.143	.5000	.664	.797	1.22
-6		3/8	9/16-18 UNF-3B	4.188	2.438	1.969	1.937	1.125	1.250	1.625	1.000	.312	.249	.143	.5000	.664	.797	3.5
-8		1/2	3/4 -16 UNF-3B	5.625	3.375	2.531	2.437	1.625	1.750	2.000	1.187	.375	.283	.175	.8125	1.045	1.078	6.0
-10		5/8	7/8 -14 UNF-3B	5.625	3.375	2.531	2.437	1.625	1.750	2.000	1.187	.375	.283	.175	.8125	1.045	1.078	10.5

PROVIDE A LOCKWIRE HOLE CLEAR OF THE F DIA AND BOSS SURFACES.

OUTLINE AS SHOWN IS MAX AND NOT RESTRICTIVE AS TO DESIGN BUT LOCATION OF PORTS MUST BE MAINTAINED.

DIMENSIONS IN INCHES. UNLESS OTHERWISE SPECIFIED, TOLERANCES: DECIMALS ±.005.

THIS STANDARD TAKES PRECEDENCE OVER DOCUMENTS REFERENCED HEREIN.

REFERENCED DOCUMENTS SHALL BE OF THE ISSUE IN EFFECT ON DATE OF INVITATIONS FOR BID.

FED. SUP. CLASS. 4820

APPROVED 13 Sep 55 REVISED A 30 Apr 57

FED. SUP CLASS. 4820

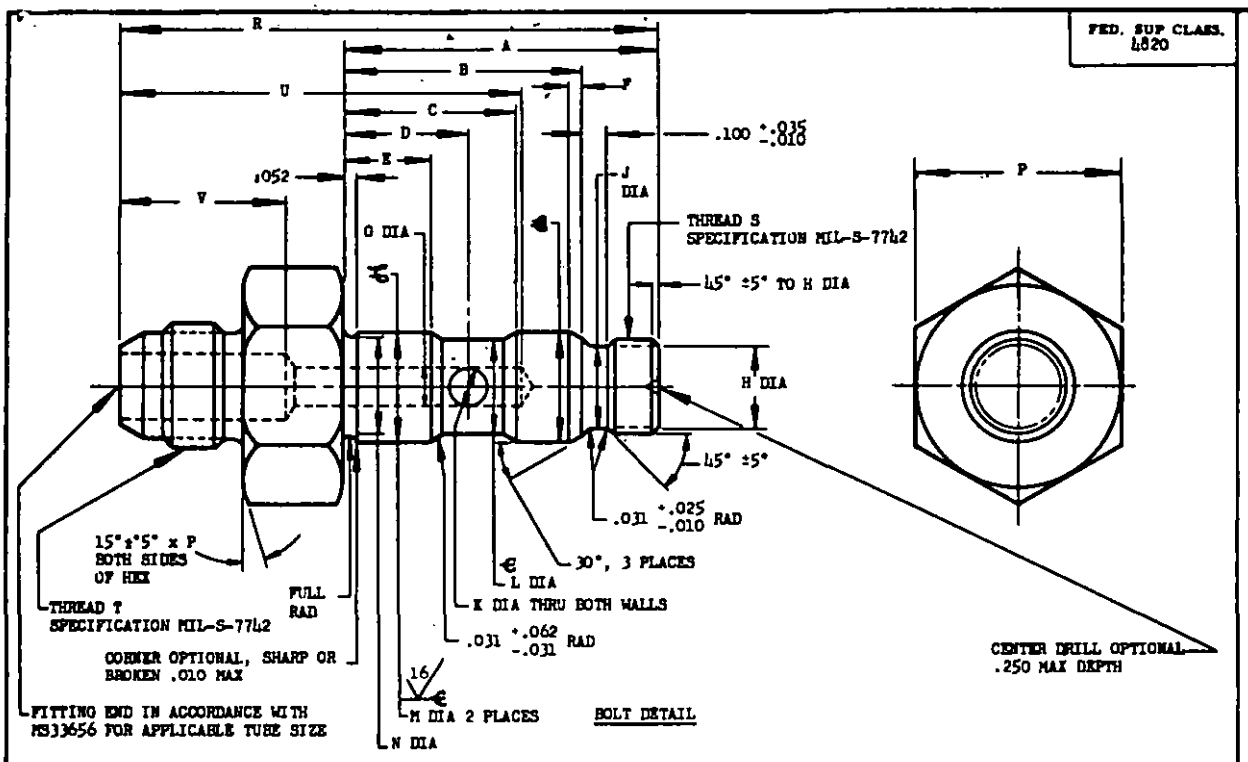

DASH NO.	FIIN	TUBE OD	THREAD S	THREAD T	A ±.031	B	C	D	E	F ±.010	G ±.003
-4		1/4	7/16-20 UNF-3A	7/16-20 UNF-3A	1.438	1.087	.726	.540	.354	.060	.172
-6		3/8		9/16-18 UNF-3A							.203
-8		1/2	9/16-18 UNF-3A	3/4 -16 UNF-3A	1.688	1.274	.891	.634	.377	.065	.391
-10		5/8		7/8 -14 UNF-3A							.422

DASH NO.	H ±.005	J ±.005	K ±.003	L ±.005	M ±.0004	N	P ±.031	R	U ±.062	V ±.062
-4	.365	.363	.189	.433	.4989	.425	.688	2.332	1.750	—
-6							.875	2.431	1.812	.750
-8	.480	.480	.300	.740	.8114	.738	1.000	2.782	2.125	—
-10							1.125	2.883	2.188	.938

MATERIAL: ALUMINUM ALLOY, 2S-T4 OR 14S-T6.

ALL OUTSIDE MACHINED SURFACES 125√, STANDARD MIL-STD-10.

ALL INSIDE SURFACES 250√, STANDARD MIL-STD-10.

REMOVE ALL BURRS AND SHARP EDGES.

DIMENSIONS IN INCHES. UNLESS OTHERWISE SPECIFIED, TOLERANCES: DECIMALS ±.010, ANGLES ±1/2°.

DIAMETERS MARKED ℄ MUST BE CONCENTRIC WITHIN .005 FIR.

DIAMETERS MARKED ℄ MUST BE CONCENTRIC WITHIN .0005 FIR.

THIS STANDARD TAKES PRECEDENCE OVER DOCUMENTS REFERENCED HEREIN.

REFERENCED DOCUMENTS SHALL BE OF THE ISSUE IN EFFECT ON DATE OF INVITATIONS FOR BID.

THIS DOCUMENT HAS BEEN PROMULGATED BY THE DEPARTMENT OF DEFENSE AS THE MILITARY STANDARD TO LIMIT THE SELECTION OF THE ITEM, PRODUCT, OR DESIGN COVERED HEREIN IN ENGINEERING, DESIGN, AND PROCUREMENT. THIS STANDARD SHALL BECOME EFFECTIVE NOT LATER THAN 90 DAYS AFTER THE LATEST DATE OF APPROVAL SHOWN.

APPROVED 13 Sep 55 REVISED (4) 30 Apr 57

CUSTODIANS	OTHER INT.	MILITARY STANDARD	MS28766 (ASG)
Navy - BuAer Air Force	A - N - AF -	VALVE, SHUTTLE, HYDRAULIC, DIRECT MOUNTING, 3,000 PSI, TYPE II SYSTEMS	
PROCUREMENT SPECIFICATION MIL-V-15058		SUPERSEDES:	SHEET 3 OF 4

FED. SUP CLASS.
4820

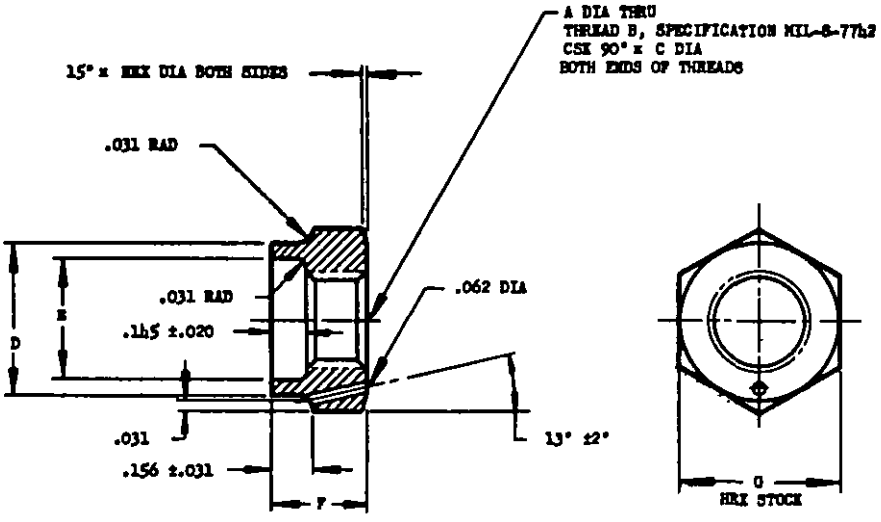

MUT

DASH NO.	FIN	THREAD T	A DIA MAX	A DIA MIN	C DIA	D DIA	E DIA	F ±.031	G ±.031
-4		7/16-20 UNF-3B	.3916	.3834	.437	.687	.562	.406	.688
-6									
-8		9/16-18 UNF-3B	.5106	.5024	.562	1.000	.875	.500	1.000
-10									

MATERIAL: ALUMINUM ALLOY, 2024T4 OR 1145T6.

ALL MACHINED SURFACES 125√, STANDARD MIL-STD-10.

REMOVE ALL BURRS AND SHARP EDGES.

DIMENSIONS IN INCHES. UNLESS OTHERWISE SPECIFIED, TOLERANCES: DECIMALS ±.010, ANGLES ±1/2°.

THIS STANDARD TAKES PRECEDENCE OVER DOCUMENTS REFERENCED HEREIN.

REFERENCED DOCUMENTS SHALL BE OF THE ISSUE IN EFFECT ON DATE OF INVITATIONS FOR BID.

THIS DOCUMENT HAS BEEN PROMULGATED BY THE DEPARTMENT OF DEFENSE AS THE MILITARY STANDARD TO LIMIT THE SELECTION OF THE ITEM, PRODUCT, OR DESIGN COVERED HEREIN IN ENGINEERING, DESIGN, AND PROCUREMENT. THIS STANDARD SHALL BECOME EFFECTIVE NOT LATER THAN 90 DAYS AFTER THE LATEST DATE OF APPROVAL SHOWN.

APPROVED 13 Sep 55 REVISED (A) 30 Apr 57

CUSTODIANS	OTHER INT.	MILITARY STANDARD	MS28766 (ASG)
Navy - BuAer Air Force	A - N - AF -	VALVE, SHUTTLE, HYDRAULIC, DIRECT MOUNTING, 3,000 PSI, TYPE II SYSTEMS	
PROCUREMENT SPECIFICATION MIL-V-19068		SUPERSEDES:	SHEET 4 OF 4