Downloaded from http://www.everyspec.com

FED. SUP CLASS.
4820

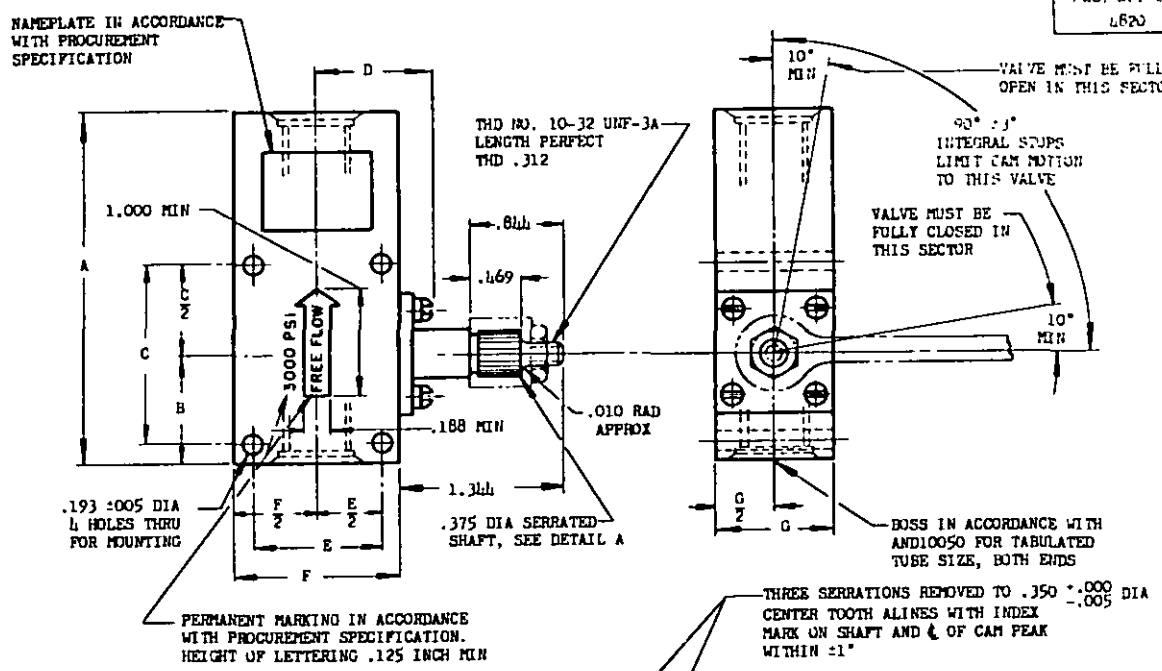

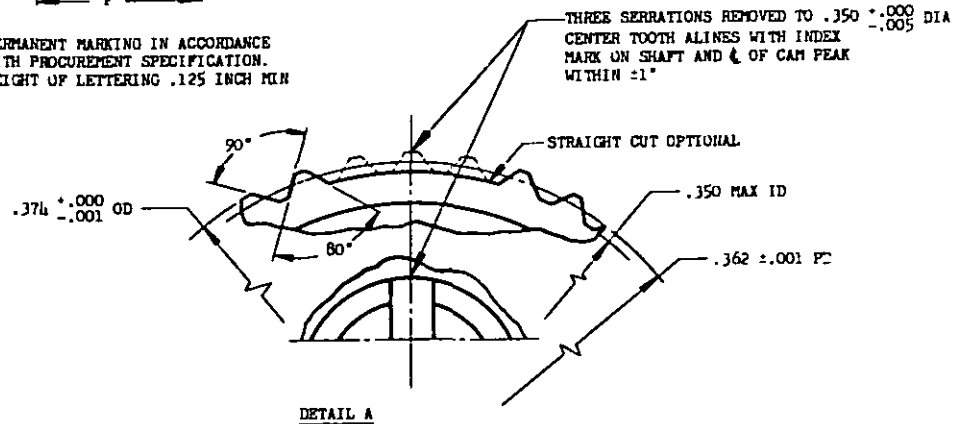

DETAIL A

DASH NO.	FIIN	TUBING OD	A	B	C ±.005	D MAX	E ±.005	F	G
-4		1/4	2.750	.812	1.250	1.000	1.031	1.375	1.000
-8		1/2	3.219	1.000	1.625	1.062	1.156	1.500	1.125
-12		3/4	3.875	1.250	2.000	1.250	1.500	2.000	1.500

INTEGRAL STOP MECHANISM SHALL BE READILY CONVERTIBLE FOR CLOCKWISE OR COUNTERCLOCKWISE ROTATION. STOP MECHANISM MUST BE INDEPENDENT OF HANDLE.

DIMENSIONS IN INCHES. UNLESS OTHERWISE SPECIFIED, TOLERANCE: DECIMALS ±.031.

THIS STANDARD TAKES PRECEDENCE OVER DOCUMENTS REFERENCED HEREIN.

REFERENCED DOCUMENTS SHALL BE OF THE ISSUE IN EFFECT ON DATE OF INVITATIONS FOR BID.

THIS DOCUMENT HAS BEEN PROMULGATED BY THE DEPARTMENT OF DEFENSE AS THE MILITARY STANDARD TO LIMIT THE SELECTION OF THE ITEM, PRODUCT, OR DESIGN COVERED HEREIN IN ENGINEERING, DESIGN, AND PROCUREMENT. THIS STANDARD SHALL BECOME EFFECTIVE NOT LATER THAN 90 DAYS AFTER THE LATEST DATE OF APPROVAL SHOWN.

APPROVED 13 Sep 55 REVISED (A) 19 Apr 57

NOTICE: When Government drawings, specifications, or other data are used for any purpose other than in connection with a definitely related Government procurement operation, the United States Government thereby incurs no responsibility, nor any obligation whatsoever; and the fact that the Government may have formulated, furnished, or in any way supplied the said drawings, specifications, or other data is not to be regarded by implication or otherwise as in any manner licensing the holder or any other person or corporation, or conveying any rights or permission to manufacture, use, or sell any patented invention that may in any way be related thereto.

CUSTODIANS	OTHER INT.	MILITARY STANDARD	MS28764 (ASG)
Navy - BuAer Air Force	A - N - AF -	VALVE, CHECK, CONTROLLABLE, ROTARY-ACTION, HYDRAULIC, 3,000 PSI, TYPE II SYSTEMS	
PROCUREMENT SPECIFICATION MIL-V-19067		SUPERSEDES:	SHEET 1 OF 1

DD FORM 872-1