Downloaded from http://www.everyspec.com

INCH-POUND
MS28754E
5 June 2012
SUPERSEDING
MS28754D
6 August 2010

DETAIL SPECIFICATION SHEET

FITTING END, SELF-SEALING FUEL HOSE, SWIVEL, DETACHABLE, FLANGED, 45°

This specification is approved for use by all Departments and Agencies of the Department of Defense.

The requirements for acquiring the product described herein shall consist of this specification sheet.

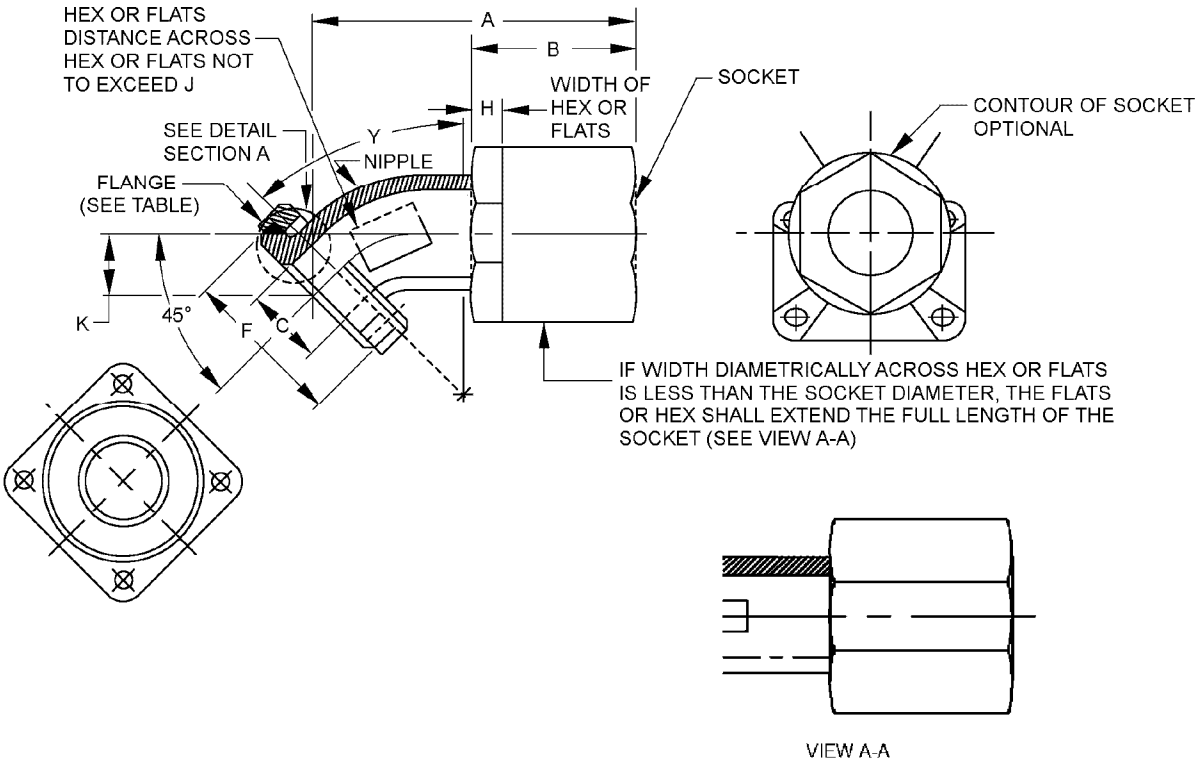

FIGURE 1. 45° fuel hose fitting.

Downloaded from http://www.everyspec.com

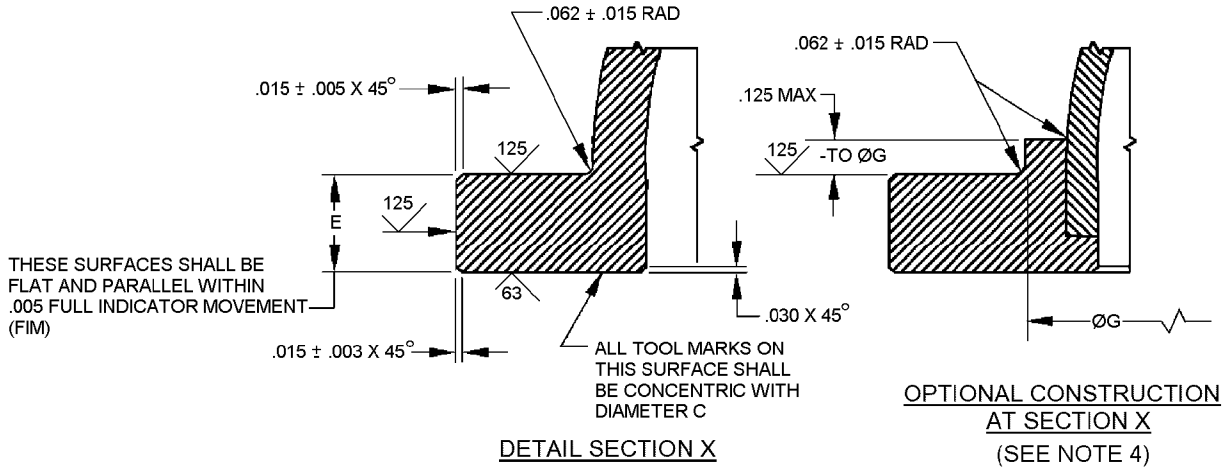

inch	mm
.003	0.08
.005	0.13
.015	0.38
.030	0.76
.062	1.57
.125	3.18

Size designator	Nominal tubing and hose size (REF)	Flange PIN (see notes 5 and 6)	A max. inch (mm)	B max. inch (mm)	C min dia. (see note 7) inch (mm)	D dia. max. inch (mm)
16	I (1.000)	MS20756*16	3.672 (93.27)	2.000 (50.80)	.813 (20.65)	1.953 (49.61)
20	1 ¼ (1.250)	MS20756*20	3.797 (96.44)	2.000 (50.80)	1.047 (26.59)	2.313 (58.75)
24	1 ½ (1.500)	MS20756*24	4.219 (107.16)	2.000 (50.80)	1.281 (32.54)	2.563 (65.10)
32	2 (2.000)	MS20756*32	4.875 (123.83)	2.250 (57.15)	1.750 (44.45)	3.125 (79.38)
40	2 ½ (2.500)	MS20756*40	5.438 (138.13)	2.500 (63.50)	2.203 (55.96)	3.625 (92.08)
48	3 (3.000)	MS20756*48	5.969 (151.61)	2.500 (63.50)	2.828 (71.83)	4.438 (138.13)

Size designator	E +.000 -.005 (0.13) inch (mm)	F dia. +.000 -.005 (0.13) (see note 7) inch (mm)	G max dia. (see note 7) inch (mm)	H min. inch (mm)	J min. inch (mm)	K dia. max. inch (mm)
16	.156 (3.96)	1.500 (38.10)	.188 (4.78)	.375 (9.53)	1.343 (34.11)	.656 (16.66)
20	.156 (3.96)	1.844 (46.84)	.500 (12.70)	.500 (12.70)	1.656 (42.06)	.656 (16.66)
24	.188 (4.78)	2.125 (53.98)	.750 (19.05)	.500 (12.70)	1.906 (48.41)	.813 (20.65)
32	.188 (4.78)	2.750 (69.85)	2.375 (60.33)	.625 (15.88)	2.531 (64.29)	.953 (24.21)
40	.188 (4.78)	3.281 (83.34)	2.875 (73.03)	1.000 (25.40)	3.031 (76.99)	1.031 (26.19)
48	.188 (4.78)	3.781 (96.04)	3.375 (85.73)	1.250 (31.75)	3.250 (85.22)	1.391 (35.33)

FIGURE 1. 45° fuel hose fitting - Continued.

Downloaded from http://www.everyspec.com

NOTES:

1. Dimensions are in inches.
2. Metric equivalents are given for information only.
3. Unless otherwise specified, tolerances: decimals ± .010 (0.25 mm); angles ± .01°.
4. Dimensions and finishes are the same as detail X unless otherwise noted.
5. Part or Identifying Number (PIN).
6. Material designator D, W or T see MS20756.
7. Diameters C, F and G shall be concentric within .010 inch (0.25 mm) FIM.
8. The true circular cross section is not required within angle Y, however, a ball .031 inch (0.79 mm) smaller than C must pass through. Nipple ID within angle Y shall not exceed C.

FIGURE 1. 45° fuel hose fitting - Continued.

REQUIREMENTS:

Material: Materials and finish shall be in accordance with table I and SAE-AS4841.

TABLE I. Material and finish designators.

Material designator	Alloy	Finish
D	Aluminum alloy 2014 or 2024	Anodize in accordance with MIL-A-8625, type II. 1/
W	Aluminum alloy 7075	Anodize in accordance with MIL-A-8625, type II. 1/
Dash (-)	Titanium 2/	Fluoride phosphated in accordance with SAE-AMS2486 3/
T	Titanium 2/	Anodized in accordance with SAE-AMS2488, type 2

1/ Aluminum alloys 2014 and 2024 aluminum shall be dyed light blue. Aluminum alloy 7075 shall be dyed brown.
2/ Titanium shall not be used in oxygen systems.
3/ Color equivalent to numbers /36076, /36081, /36099, /36118, /36134, /36152, /36170, /36173, and /36176 in accordance with FED-STD-595.

Fittings must swivel through 360° with sufficient clearance to allow use of standard wrenches on the nut when the axis of the hose is aligned over the stud or capscrew.

Hex or flats shall fit standard wrench openings.

Surface roughness shall be in accordance with ASME-B46.1.

Remove all burrs and sharp edges. The interior surface of the fitting shall be smooth and free from projections.

Downloaded from http://www.everyspec.com

PIN. The PIN shall consist of the prefix MS followed by the specification sheet number, letter for material designator, and a number for the size.

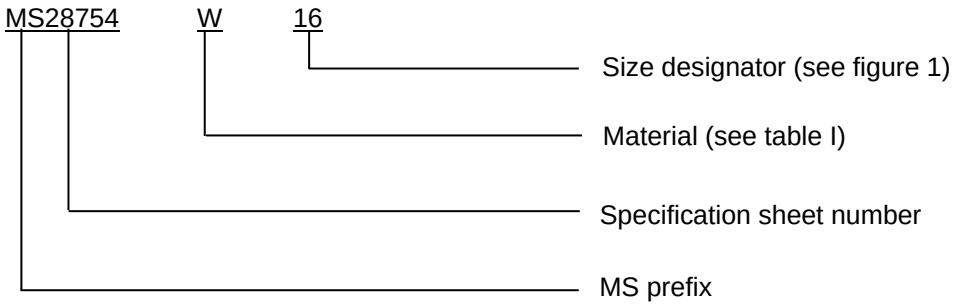

Example of PIN: MS28754W16 indicates a swivel with 45° flange, aluminum, 1 inch hose or tubing size.

Fittings shall be permanently marked with the applicable MS PIN on an unfinished surface of the nipple.

Approximate weights are shown in table II.

TABLE II. Approximate weight.

Size	Weight lb (Approx)	
	Aluminum	Titanium
16	.735 (333.4)	1.21 (548.8)
20	.830 (376.5	1.37 (621.4)
24	.840 (381.0)	1.39 (630.5)
32	1.064 (482.6)	1.76 (798.3)
40	1.300 (589.7)	2.15 (975.2)
48	1.650 (748.4)	2.73 (1238.3

Intended use: Hose assemblies using hose in accordance with MIL-PRF-7061.

Changes from previous issue. Marginal notations are not used in this revision to identify changes with respect to the previous issue, due to the extent of the changes.

Referenced documents. This document references the following:

FED-STD-595/36076
FED-STD-595/36081
FED-STD-595/36099
FED-STD-595/36118
FED-STD-595/36134
FED-STD-595/36152
FED-STD-595/36170
FED-STD-595/36173
FED-STD-595/36176
MIL-A-8625
MIL-PRF-7061
MS20756
ASME-B46.1
SAE-AMS2486
SAE-AMS2488
SAE-AS4841

Downloaded from http://www.everyspec.com

CONCLUDING MATERIAL

Custodians:
Navy - AS
Air Force - 99
DLA - CC

Preparing activity:
DLA - CC

(Project 4730-2012-027)

Review activities:
Navy - SA
Air Force - 71

NOTE: The activities listed above were interested in this document as of the date of this document. Since organizations and responsibilities can change, you should verify the currency of the information above using the ASSIST Online database at https://assist.daps.dla.mil.