Downloaded from http://www.everyspec.com

FED. SUP CLASS
6620

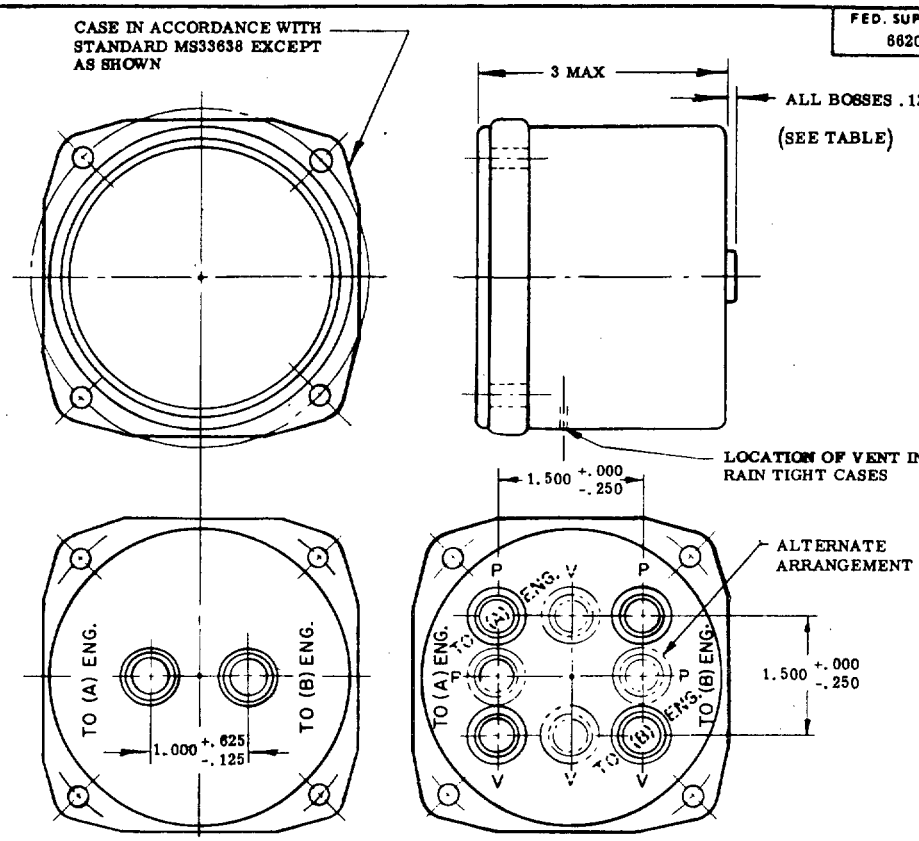

OIL AND GENERAL HIGH PRESSURE GAGES BACK VIEW

FUEL PRESSURE GAGES BACK VIEW

LOCATION OF BOSSES

DASH NO.	USE	PRESSURE RANGE, PSI	POINTERS MARKED (SEE NOTE 3) (A)	(B)	BOSSES	PACKING
-T3	FUEL PRESSURE	0-25	NO. 2	NO. 1	MS33649-4	MS28778-4
-T4			NO. 4	NO. 3		
-T5	OIL PRESSURE	0-200	NO. 2	NO. 1		
-T6			NO. 4	NO. 3		
-T7	GENERAL HIGH PRESSURE	0-2,000	NO. 2	NO. 1		
-T8	OIL PRESSURE	0-200				
-T9			NO. 4	NO. 3		
-T10	GENERAL HIGH PRESSURE	0-5,000	NO. 2	NO. 1		

NOTES:

1. DIMENSIONS IN INCHES.
2. INTERCHANGEABILITY RELATIONSHIP: MS28064-3 THROUGH -10 GAGES SUPPLIED WITH INSERT NUTS ARE CANCELED. MS28064-3T THROUGH MS28064-10T REPLACES THE CANCELED MS28064-1 THROUGH -10 RESPECTIVELY.
3. FOR PORT MARKING ON THE GAGE: SUBSTITUTE THE PROPER ENGINE NO. FOR (A) AND (B) AS LISTED IN THE TABLE.

FOR DESIGN FEATURE PURPOSES, THIS STANDARD TAKES PRECEDENCE OVER PROCUREMENT DOCUMENTS REFERENCED HEREIN. REFERENCED DOCUMENTS SHALL BE OF THE ISSUE IN EFFECT ON DATE OF INVITATIONS FOR BIDS.

(B) ENTIRE STANDARD REVISED AND REDRAWN

P.A. NAVY - AS Other Cust USAF-71 ARMY-AV	TITLE GAGES, PRESSURE, ENGINE AND UTILITY, 3-INCH, FLANGE-MOUNTED, BACK PORTS	MILITARY STANDARD MS28064
PROCUREMENT SPECIFICATION MIL-G-7734	SUPERSEDES: AN 5772	SHEET 1 OF 1

DD FORM 1 SEP 57 672-1 (Coordinated)

PREVIOUS EDITIONS OF THIS FORM ARE OBSOLETE.

PLATE NO. 15320

USER SYMBOLS: NAVY-MC

REVIEWER SYMBOLS: AF-71

"Review/user information is current as of the date of this document. For future coordination of changes to this document, draft circulation should be based on the information in the current DODISS."

This military standard is approved by the Department of Defense and is mandatory for use by all Departments & Agencies of the Department of Defense. Selection for all new engineering and design applications and for repetitive use shall be made from this document.

APPROVED 14 AUG 56 REVISED (A) 13 AUG 59 (B) 16 December 1968