Downloaded from http://www.everyspec.com

FED. SUP CLASS
6620

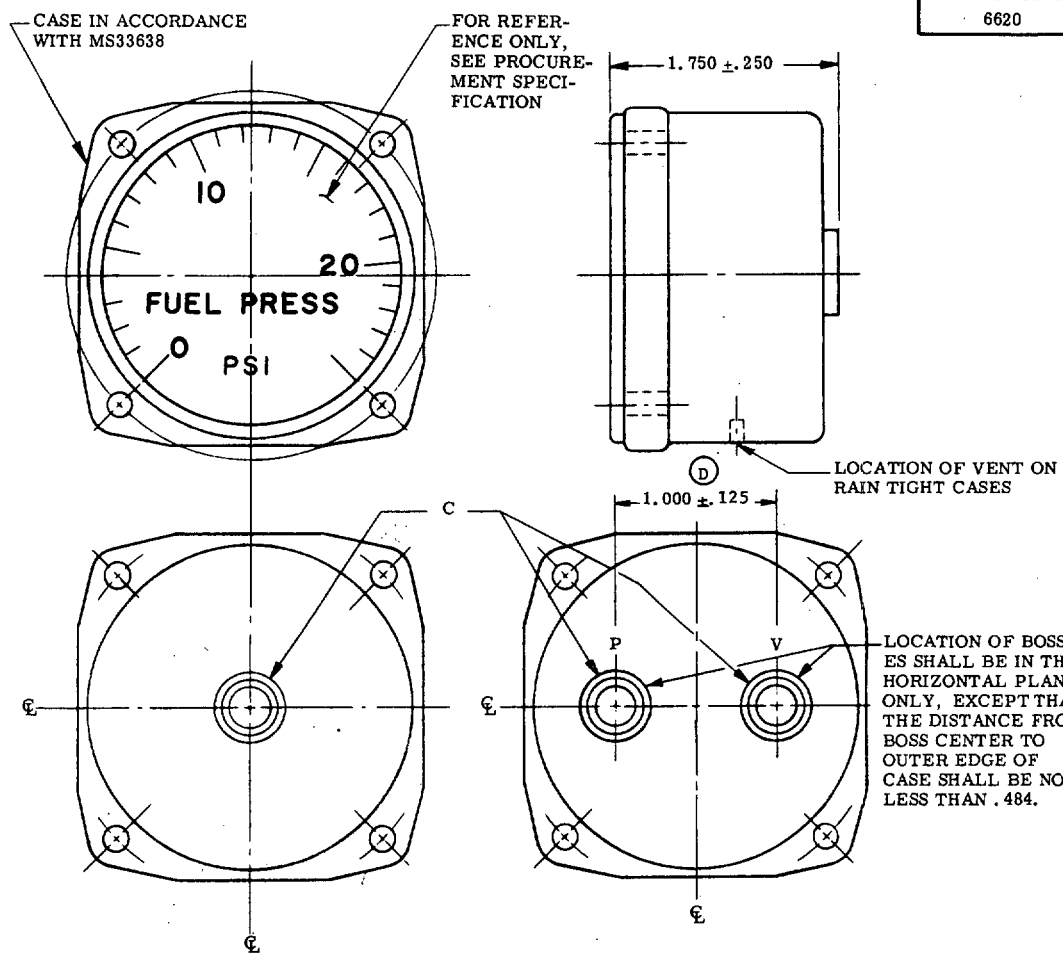

DASH NO.	GAGE FUNCTION	CASE	BOSSES C		RANGE	PACKING
-T1	FUEL PRESSURE	AIR TIGHT	TWO	MS33649-4	0-25 PSI	MS28778-4
-T2	OIL OR PILOT PRESSURE	RAIN TIGHT	ONE		0-200 PSI	
-T3	DEICING PRESSURE	AIR TIGHT	TWO		0-20 PSI	
-T4	SUCTION				0-10 IN. HG	
-T5	OIL OR PILOT PRESSURE	RAIN TIGHT	ONE		0-300 PSI	
-T6	GENERAL HIGH PRESSURE				0-2000 PSI	
-T7	HYDRAULIC, AIR, ETC.				0-5000 PSI	

NOTES:

1. DIMENSIONS IN INCHES.
2. INTERCHANGEABILITY RELATIONSHIP: MS28061-1 THROUGH -7 GAGES SUPPLIED WITH INSERT NUTS ARE CANCELLED. MS28061-T1 THROUGH MS28061-T7 REPLACES THE CANCELLED MS28061-1 THROUGH -7 RESPECTIVELY.

FOR DESIGN FEATURE PURPOSES, THIS STANDARD TAKES PRECEDENCE OVER PROCUREMENT DOCUMENTS REFERENCED HEREIN. REFERENCED DOCUMENTS SHALL BE OF THE ISSUE IN EFFECT ON DATE OF INVITATIONS FOR BID.

D DENOTES CHANGES

P.A. NAVY - AS Other Cust USAF-99 ARMY-AV	TITLE GAGES, PRESSURE, ENGINE AND UTILITY, 2 INCH FLANGE-MOUNTED, BACK PORTS	MILITARY STANDARD MS28061
PROCUREMENT SPECIFICATION MIL-G-7734	SUPERSEDES: AN 5771	SHEET 1 OF 1

DD FORM 1 SEP 57 672-1 (Coordinated) PREVIOUS EDITIONS OF THIS FORM ARE OBSOLETE.

PLATE NO. 15320
PROJECT NO. 6620-0300

APPROVED 14 AUG 56 REVISED (A) 13 AUG 59 (B) 3 DEC 68 (C) 7 DEC 71 (D) 17 APRIL 1979

USER SYMBOLS: NAVY - MC, USAF - 71, ARMY - MI

REVIEWER SYMBOLS: USAF - 71, ARMY - AV, NAVY - AS

"Review/user information is current as of the date of this document. For future coordination of changes to this document, draft circulation should be based on the information in the current DODISS."

This military standard is mandatory for use by all Departments & Agencies of the Department of Defense. Selection for all new engineering and design applications and for repetitive use shall be made from this document.