Downloaded from http://www.everyspec.com

Form Approved
OMB No. 0704-0188

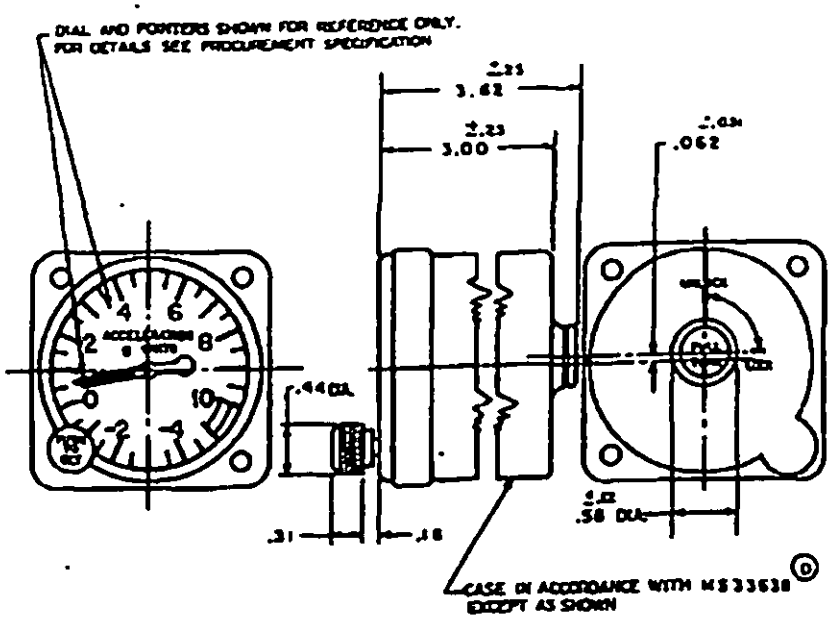

MS PART NO.
MS28025-1

THE CONTRACTOR SHALL FURNISH SUFFICIENT MOUNTING SCREWS FOR INSTALLING THE INSTRUMENT. THEY SHALL BE NO.6-32 NC-2 ROUND HEAD BRASS MACHINE SCREWS, HAVING DURABLE DULL BLACK OXIDIZED OR BLACK NICKEL FINISH. THE LENGTH SHALL BE SUFFICIENT FOR MOUNTING ON A PANEL .190 THICK.

DIMENSIONS IN INCHES. UNLESS OTHERWISE SPECIFIED, TOLERANCES: FRACTIONS ± .016.

Certain provisions of this specification are the subject of international standardization agreements ASCC Air STD 15/4 and STANAG 3130. When revision or cancellation of this document is proposed which will modify the international agreement concerned, the preparing activity will take appropriate action through international standardization channels including departmental standardization officer to change the agreement or make other appropriate accomodations.

(D) DENOTES CHANGES

PREPARING ACTIVITY: 71 CUSTODIANS: ARMY - NAVY - AS AIR FORCE - 99 DLA - REVIEW: USER: PROJECT NUMBER: 6610-0406	MILITARY SPECIFICATION SHEET TITLE ACCELEROMETER - AIRCRAFT	SPECIFICATION SHEET NUMBER MS28025D 25 MARCH 1995 SUPERSEDING MS28025C 29 MAY 1983 AMSC - N/A FSC - 6610
DISTRIBUTION STATEMENT A. APPROVED FOR PUBLIC RELEASE; DISTRIBUTION IS UNLIMITED.		Page 1 of 1

DD Form 672, MAY 88 Previous editions are obsolete.

THIS REQUIREMENTS FOR ACQUIRING THE PRODUCT(S) DESCRIBED HEREIN SHALL CONSIST OF THIS SPECIFICATION SHEET AND ATTACHED ISSUE OF THE FOLLOWING SPECIFICATION LISTED IN THAT ISSUE OF THE DODISS SPECIFIED IN THE SOLICITATION: MS-A-1313

THIS SPECIFICATION IS APPROVED FOR USE BY ALL DEPARTMENTS AND AGENCIES OF THE DEPARTMENT OF DEFENSE.