Downloaded from http://www.everyspec.com

INCH-POUND
MS27721H
13 April 2011
SUPERSEDING
MS27721G
20 May 1988

DETAIL SPECIFICATION SHEET

SWITCH, TOGGLE, MINIATURE, DOUBLE POLE
TOGGLE SEAL, LEVER LOCK

This specification is approved for use by all Departments and Agencies of the Department of Defense.

The requirements for acquiring the product described herein shall consist of this specification sheet and MIL-DTL-83731.

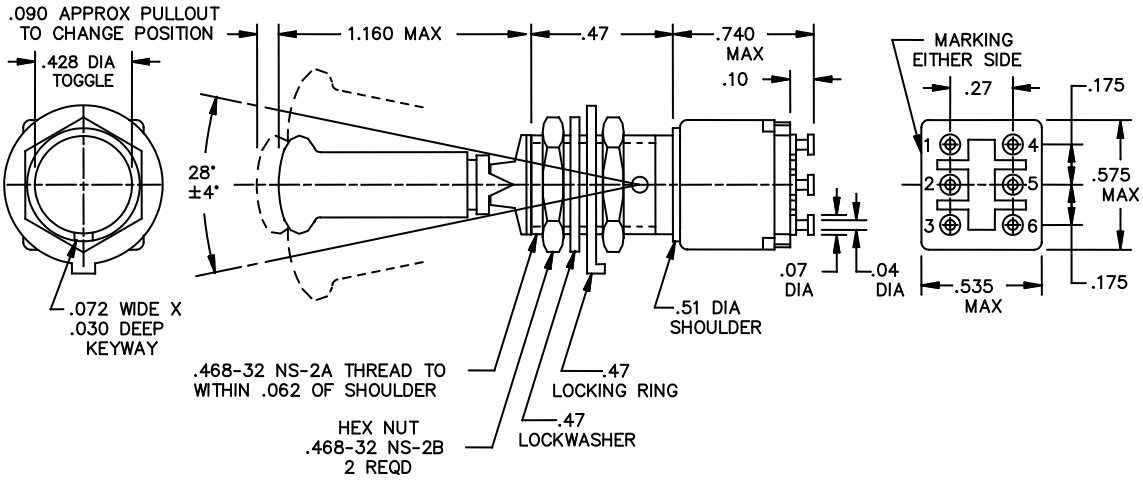

Inches	mm	Inches	mm	Inches	mm
.005	0.13	.072	1.83	.47	11.94
.020	0.51	.090	2.29	.51	12.95
.030	0.76	.10	2.54	.535	13.59
.04	1.02	.175	4.45	.575	14.61
.062	1.57	.27	6.68	.740	18.80
.07	1.78	.428	10.87	1.160	29.46

NOTES:
1. Dimensions are in inches.
2. Unless otherwise specified, tolerance is ±.020 (0.51 mm) on two place decimals and ±.005 (0.31 mm) on three place decimals.
3. For hardware detail specifications, see supplement of MIL-DTL-83731.
4. Configuration of switch case is optional provided maximum dimensions specified are not exceeded.
5. Metric equivalents are given for general information only.

FIGURE 1. Dimensions and configurations.

Downloaded from http://www.everyspec.com

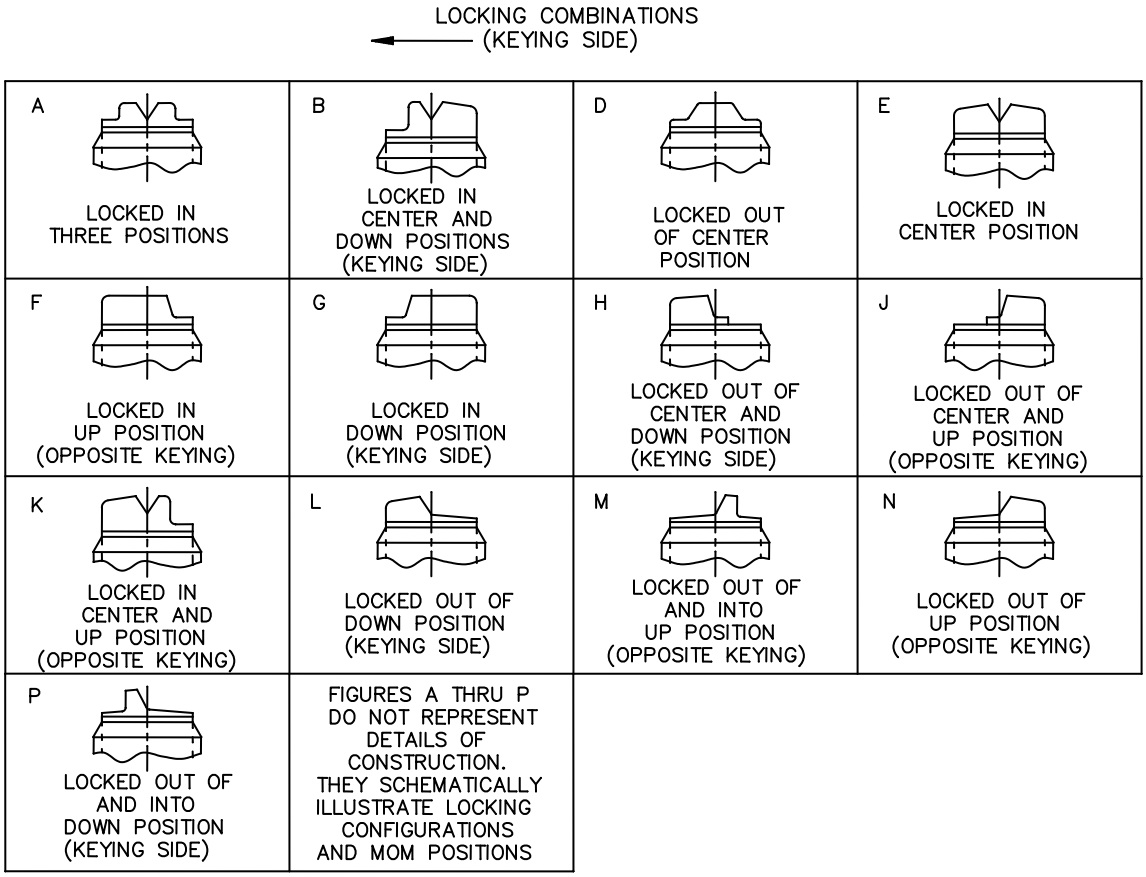

FIGURE 2. Detail requirements.

Downloaded from http://www.everyspec.com

Canceled MS part number 1/	Substitute part number 1/	Available locking combinations	Circuits made with toggle lever in		
			Keying side 1-2 4-5	Center position	Opposite keying side 2-3 5-6
MS27721-21	MS27721-21-1	All	ON	OFF	ON
-22	-22-1	D, F, G	OFF	NONE	ON
-23	-23-1	D, F, G	ON	NONE	ON
-26	-26-1	F	MOM-ON	NONE	ON
-27	-27-1	E, L, N	MOM-ON	OFF	MOM-ON
-31	-31-1	E, F, K, L, M, N	MOM-ON	OFF	ON

1/ The canceled part numbers are no longer acquirable; the substitute part numbers have a lower dielectric withstanding voltage at reduced barometric pressure (see test voltage requirement below.)

REQUIREMENTS:

All switches on this standard are designed so that the movement of the switch mechanism is opposite to that of the toggle lever.

Test voltage for dielectric withstanding voltage at reduced barometric pressure, shall be 400 V rms minimum.

Electrical endurance shall be performed for 30,000 cycles.

Mechanical endurance shall be performed 50,000 cycles at -65°C and then 50,000 cycles at 85°C.

Intermediate current shall be performed for 30,000 cycles.

Terminals shall be molded into the switch case and shall accommodate No. 18 AWG wire.

Locking arrangement: Positive locking shall be accomplished and shall prevent motion of the toggle lever until the locking mechanism is manually released.

The force required to release the locking mechanism shall be 3 to 5 pounds.

The locking means at the top of the toggle bushing shall be capable of withstanding a torque of 20 pound inches applied in both directions immediately following the humidity test.

Maximum weight shall be .045 pound.

Electrical ratings for 28 V dc and 115 V ac at 400 Hz. Lamp load = 1 ampere, resistive load = 5 amperes, inductive load = 2 amperes.

Part or Identifying Number (PIN) example: MS27721-21-1A (locking combination 'A').

Downloaded from http://www.everyspec.com

Referenced documents:
MIL-DTL-83713

Changes from previous issue. Marginal notations are not used in this revision to identify changes with respect to the previous issue due to the extent of the changes.

Custodian:
Army - CR
Navy - AS
Air Force - 85
DLA - CC

Review activity:
Army - AV
Navy - EC
Air Force - 99

Preparing activity:
DLA - CC

(Project 5930-2011-018)

NOTE: The activities listed above were interested in this document as of the date of this document. Since organizations and responsibilities can change, you should verify the currency of the information above using the ASSIST Online database at https//assist.daps.dla.mil/.